Series Ergonomic Automat

Ergonomic 290.250 GAC

Operating Instruction for Band Saw

Before transporting and using the machine,
please read the instructions thoroughly!

Seriové číslo / Serien Nummer / Serial Number _____

Service and Information

Your BOMAR dealer :

Direct BOMAR contact:		
BOMAR spol. s r.o. Těžební 1236/1 62700 Brno Czech Republic, EU	phone: fax: e-mail: www:	+420 – 533 426 100 +420 – 533 426 109 info@bomar.cz http://www.bomar.cz
We are available:		
Mondays to Fridays	7^{00} – 16^{00}	
Version:		
1.07 / May 2016 rev. 1		

© BOMAR, spol. s r.o. – Subject to modifications and amendments

EC Declaration of Conformity

1) We:

BOMAR, spol. s r.o.
Těžební 1236/1
627 00 Brno, Czech Republic
Id. No: 48908827
declare herewith

that the following designated device based on its conception and construction as well as the design launched by us meets the relevant basic safety requirements of the decrees of the government.This statement applies exclusively to the machine device in conditions in which it was brought to the market. It does not apply to parts subsequently added by the end user or to modifications performed subsequently by the end user. In the event of any device modification not approved by us this declaration shall lose its validity

Name:	Band Saw
Type :	Ergonomic 290.250 GAC
Serial number:	
Manufacturer	BOMAR, spol. s r.o., Těžební 1236/1, 627 00 Brno
Product data	
Determination:	for cross dividing and cutting of rolled and towed bars and profiles made of steel, stainless steel, non-ferrous metals and plastics
Description:	Stand, table, cutting unit with the arm, saw band and drive, hand clamping device, cooling system, machine control Pneumatic *NO* ☒ *YES* ☐ Hydraulic *NO* ☐ *YES* ☒ Control system *NO* ☐ *YES* ☒

Technical data:	Cutting rate	40/80 m.min-1 (variator) 20-90 m min-1 (FC)
	Cutting angle	0° - 60°
	Total dimensions in mm (l×w×h)	2140×1710×1700
	Total power requirement	2,6 kW
	Weight	575 kg

Documentation:
Technical documentation for this machine device was elaborated in compliance with Government regulation no. 176/2008, Annex 7, part A.

The device meets relevant requirements of the given directives: 2006/42/ES
2004/108/ES

The applied harmonized standards, National standards and technical specifications:

ČSN EN ISO 12100:2011	ČSN EN 13898+A1:2009	ČSN EN ISO 13857:2008
ČSN EN ISO 4413:2011		ČSN EN 60204 -1 ed.2+A1:2009
ČSN EN 55011 ed.3+A1:2011	ČSN EN 61000-6-2 ed.3:2006	ČSN EN 61000-6-4 ed.2+A1:2011

The product is safe on condition of the common and determined usage.
The conformity judging was performed according to §12, par. 3, let. a), of the Law no. 22/1997 Coll. as amended.
The declaration of conformity was carried out in the cooperation with the TÜV SÜD Czech s.r.o, 2) , Novodvorská 994, 142 21 Prague 4 – Czech Republic, Identification number: 63987121 - Inspection body no. 4002.
The inspection certificate no 07.801.283 was issued.

BOMAR, spol. s r.o.
Těžební 1236/1, 627 00 Brno
Czech Republic
IČO: 48908827
DIČ: CZ48908827

Brno, 29.2.2016

Point of issue, datum

Alfred Pichlmann, Managing Director

Name and function of the responsible subject, signature

1) Person authorized to complete the technical documentation:: BOMAR, spol. s r. o., Těžební 1236/1, 627 00 Brno

2) Name, address and identification number of the subject issuing the conformity declaration (producer of importer) 3) The authorized or accredited body co-operating on the conformity judging	
!	If the equipment is installed without safety equipment offered by BOMAR, spol. s ro or its agents and used by the customer (or buyer) then EC declaration loses validity. EC Declaration of conformity is valid only if customer (buyer) installed the BOMAR safety equipment with the machine or with some other with equivalent safety device in accordance with current applicable regulations and standards. All machine elements and components that were built into the device by BOMAR, spol. s ro have been declared "identical" to a safety device, as offered by BOMAR, spol. s ro or its agents.

Content

1. BEZPEČNOSTNÍ POKYNY / SICHERHEITSHINWEISE / SAFETY NOTES 12

1.1. Machine determination 14
1.2. Protective clothing and personal safety 14
1.3. Safety instructions for machine operator 16
1.4. Safety notes for the servicing and repairs 18
1.5. Safety accessories of the machine 18
1.5.1. Total Stop 18
1.5.2. Saw arm cover 19
1.5.3. Saw band cover 19
1.5.4. Feeding vice cover 19
1.5.5. Saw band stretching and rupture inspection 20
1.6. Safety notes for the cooling 20
1.6.1. Instructions for first aid 20
1.7. Umístění štítku stroje / Maschinenschild position / Position of machine label 21
1.8. Umístění bezpečnostních značek / Verteilung der Sicherheitszeichen / Position of safety symbols 22

2. DOKUMENTACE STROJE / DOKUMENTATION DER MASCHINE / MACHINE DOCUMENTATION 24

2.1. Technická data / Technische Daten / Technical data 26
2.2. Rozměrové schéma / Aufstellzeichnung / Installation diagram 27
2.3. Popis / Beschreibung / Description 28
2.4. Transportation and stocking 29
2.4.1. Conditions for transportation and stocking 29
2.4.2. Transport and stocking preparations 29
2.4.3. Transport and stocking 29
2.5. Transportní schéma / Transport schéma / Transport schneme 30
2.6. Activation 31
2.6.1. Machine working conditions 31
2.7. Band saw unpacking and assembling 31
2.7.1. Machine installing and leveling 31
2.8. Machine disposal after lifetime 31
2.9. Kotevní plan / Verankerungsplan / Grounding plan 32
2.10. Electrical connection 33
2.10.1. Direction of the saw band check 33
2.10.2. Check machine connection into electrical network 35
2.11. Filling of the cooling system 35
2.12. Putting into operation of the hydraulic unit 35
2.12.1. Filling the reservoir with hydraulic oil 37
2.13. Machine functions check 37
2.14. Saw band 39
2.14.1. Saw band size 39
2.14.2. Selection of the saw band tooth system 39
2.14.3. Saw band running-in 39
2.15. Table for teeth selection 41

3. OVLÁDÁNÍ STROJE / MACHINE CONTROL / BEDIENUNG DER MASCHINE 43

3.1. Starting the saw 45
3.2. Control panel 46
3.2.1. Ergonomic 290.250 GAC without frequency converter 46
3.2.2. Ergonomic 290.250 GAC– with frequency converter 48
3.3. Referencing 50
3.4. Semi-automatic cycle 51

3.4.1. Cycle interruption 51
3.5. Automatic cycle programming 52
3.5.1. Program creation 52
3.5.2. Program storing 53
3.5.3. Program selection 54
3.5.4. Editing existing pre-selection 55
3.5.5. New pre-selection inserting 56
3.5.6. Clearing 57
3.6. Automatic cycle with trim cut 59
3.7. Automatic cycle without trim cut 60
3.7.1. Cycle interruption 61
3.8. Service menu 62
3.8.1. Entrance to service menu 62
3.8.2. Vice parameters 62
3.8.3. Cooling parameters 62
3.8.4. Cutting parameters 63
3.8.5. Length units selection 64
3.8.6. Service menu closing 66
3.9. Band saw adjusting 66
3.9.1. Support roller 66
3.9.2. Speed adjusting of the arm lowering 67
3.9.3. Cutting speed setting Ergonomic 290.250 GAC – without frequency converter 67
3.9.4. Cutting speed setting Ergonomic 290.250 GAC – with frequency converter 67
3.9.5. Angular cut setting 67
3.9.6. Optimal adjusting of the guide cubes span 69
3.9.7. Vice setting 70
3.9.8. Pressure adjusting to the cut 71
3.9.9. Swarf conveyor operation 72
3.9.10. Upper pressure adjustment 72
3.10. Vkládání materiálu 74
3.10.1. Volba manipulačního prostředku 74
3.10.2. Vkládání 74
3.10.3. Řezání ve svazku 74

4. ÚDRŽBA STROJE / WARTUNG / MACHINE MAINTENANCE ..76

4.1. Saw band dismantling 78
4.2. Saw band installation 79
4.3. Saw band stretching and inspection 80
4.3.1. Saw band stretching 80
4.3.2. Saw band run inspection 82
4.4. Adjustment 83
4.4.1. Saw band run adjustment 83
4.4.2. Hard metal guides adjustment 83
4.4.3. Setting of the guiding cubes 84
4.4.4. Setting of angular stops 84
4.4.5. Adjusting the limit switch of the saw band stretching 86
4.4.6. Saw frame lower position stop adjustment 86
4.4.7. Adjustment of the limit switch of saw frame lower stop 87
4.4.8. Setting of the feeder back position induction switch 87
4.4.9. Setting of the feeder front position induction switch 88
4.4.10. Pressure switch adjustment 88
4.4.11. System pressure adjustment 89
4.4.12. Adjustment of the feeder cylinder step setting securing cube 89
4.4.13. Setting of the throttle valve 90
4.4.14. Brush adjustment 91
4.4.15. Setting of the turning lever securing cube 92
4.5. Cooling agents and chip disposal 93
4.5.1. Coolant inspection 93
4.5.2. Chips disposal 94
4.6. Gearbox oils and greases 94
4.6.1. Gearbox oils 94

4.6.2. Lubrication greases 95
4.6.3. Lubrication 96
4.6.4. Hydraulic oils 96
4.6.5. Inspection of the hydraulic oil state 98
4.7. Machine cleaning 98
4.8. Worn pieces replacement 99
4.8.1. Hard metal guides replacement 99
4.8.2. Worn brush replacement 100
4.8.3. Saw band guiding rollers replacement 100
4.8.4. Stretching wheel replacement 102
4.8.5. Driving wheel replacement 104
4.8.6. Cooling pump replacement 106

5. ZÁVADY / STÖRUNGEN / TROUBLESHOOTING 108

5.1. Mechanical malfunctions 110
5.2. Electrical malfunctions 115
5.3. Hydraulic malfunctions 117

6. SCHÉMATA / SCHEMAS / SCHEMATICS 119

6.1. Elektrické schema /Elektroschema Wiring diagrams 121
6.1.1. Ergonomic 290.250 GAC without frequency converter 3x400V+PE, 50Hz 121
6.1.2. Ergonomic 290.250 GAC with frequency converter 3x400V+PE, 50Hz 142
6.1.3. Ergonomic 290.250 GAC bez frekvenčního měniče 3x230V+PE, 50Hz 165
6.1.4. Ergonomic 290.250 GAC s frekvenčním měničem 3x230V+PE, 50Hz 186
6.2. Hydraulické schéma Hydraulisches Schéma Hydraulic diagram 210

7. VÝKRESY SESTAV PRO OBJEDNÁNÍ NÁHRADNÍCH DÍLŮ / ZEICHNUNGEN FÜR BESTELLUNG DER ERSATZTEILE / DRAWING ASSEMBLIES FOR SPARE PARTS ORDER 213

7.1. ERGONOMIC 290.250 GAC 214
7.2. Kusovník / Piece list / Stückliste - ERGONOMIC 290.250 GAC 215
7.3. Válec zvedací / Lifting cylinder / Hebezylinder 216
7.4. Kusovník / Piece list / Stückliste - Válec zvedací / Lifting cylinder / Hebezylinder 217
7.5. Odměřování / Measuring / Gehrungsmessung 218
7.6. Kusovník / Piece list / Stückliste - Odměřování / Measuring / Gehrungsmessung 219
7.7. Konzola otočná / Turnable consol / Drehkonsole 220
7.8. Kusovník / Piece list / Stückliste - Konzola otočná / Turnable consol / Drehkonsole 221
7.9. Kartáč / Brush / Bürste 223
7.10. Kryt podavače / Vorschubsleistedeckel / Feeders bracket cover 224
7.11. Kusovník / Piece list / Stückliste - Kryt podavače / Vorschubsleistedeckel / Feeders bracket cover 225
7.12. Podstsvec / Base / Untersatz 226
7.13. Kusovník / Piece list / Stückliste - Podstsvec / Base / Untersatz 227
7.14. Svěrák / Vice / Schraubstock 228
7.15. Kusovník / Piece list / Stückliste - Svěrák / Vice / Schraubstock 229
7.16. Chlazení / Cooling / Kühlung 230
7.17. Čelo / Head / Stirn 231
7.18. Podavač / Feeder / Vorschub 232
7.19. Kusovník / Piece list / Stückliste - Podavač / Feeder / Vorschub 233
7.20. Podavač / Feeder / Vorschub 234
7.21. Kusovník / Piece list / Stückliste - Podavač / Feeder / Vorschub 235
7.22. Válec upínací / Fixing cylinder / Spannzylinder 236
7.23. Kusovník / Piece list / Stückliste - Válec upínací / Fixing cylinder / Spannzylinder 237
7.24. Čelist / Jaw / Backe 238
7.25. Kusovník / Piece list / Stückliste - Čelist / Jaw / Backe 239

7.26. Konzola / Console / Konsole 240
7.27. Trať / Track / Bahn 242
7.28. Kusovník / Piece list / Stückliste - Trať / Track / Bahn 243
7.29. Rameno / Shoulder / Sägerahmen 244
7.30. Kusovník / Piece list / Stückliste - Rameno / Shoulder / Sägerahmen .. 245
7.31. Rameno / Shoulder / Sägerahmen 246
7.32. Kusovník / Piece list / Stückliste - Rameno / Shoulder / Sägerahmen ...247
7.33. Napínání / Tensioning / Spannung 248
7.34. Kusovník / Piece list / Stückliste - Napínání / Tensioning / Spannung .. 249
7.35. Vedení pásu / Belt guide / Sägebandführung 250
7.36. Kusovník / Piece list / Stückliste - Vedení pásu / Belt guide / Sägebandführung 251
7.37. Kostka vodící / Lead cube / Führungsklotz.....252
7.38. Kusovník / Piece list / Stückliste - Kostka vodící / Lead cube / Führungsklotz 253
7.39. Kostka vodící / Lead cube / Führungsklotz..... 254
7.40. Kusovník / Piece list / Stückliste - Kostka vodící / Lead cube / Führungsklotz 255

1. Bezpečnostní pokyny / Sicherheitshinweise / Safety notes

Manual version: 1.07 / May 2016
Manual rev.: 1

The operating instructions must be read by any person, who gets in contact with the machine during transportation, installation, using, servicing, reparation, stocking or removal!

The operating instructions include relevant information. The operator must familiarize himself with the installation and operation, safety notes and machine servicing, to reach maximum reliability and lifespan. The operating instructions serve to avoid risks, which are linked with work on the machine. Before transporting and using the machine, please read the instructions thoroughly!

Attention!
The operating instructions must be available at the machine! Keep the operating instructions in a good condition!

1.1. Machine determination

The band saw Ergonomic 290.250 GAC is determined for cutting and shortening of rolled bars, drawn bars and profiles from steels, stainless steels, non-ferrous metals and plastics with changeable cutting angle from 0° to 60°.

Combustible materials are excluded from cutting! Any other usage and operation outside this range are unauthorized and the manufacturer/supplier does not accept any responsibility for any damages resulting from such misuse. The operator has full responsibility!

The machine is equipped with safety and protective measures for both the operator and the machine to be protected. Nevertheless, these measures cannot prevent all injuries. All personnel must read this chapter and understand it, before they start to work on the machine. Always follow the safety instructions! The personnel must take into account other aspects of the risk, which include the conditions of the working place and the material.

Attention!
Mind the safety signs on the machine. Do not remove or damage them! Keep these labels always readable!

1.2. Protective clothing and personal safety

Attention!
An exclamation mark in a yellow triangle signifies a safety warning. Its meaning is described next to the symbol.

Wear fitting clothes! Loosely fitting clothes may be caught in moving machine parts and cause serious injuries.

Wear protective gloves! Material cuts and saw band have sharp edges and may cause injuries.

Attention!
Gloves can be worn only when manipulating with material or replacing parts! The machine and its accessories must be inactive!
If the machine is running, you must not wear gloves! There is a higher risk of getting caught in moving machinery!

Wear protective shoes with antiskid soles! Unsuitable shoes may cause loss of balance and following injury. Dropped blank cuts may cause injuries too.

Wear protective goggles! Flung chips and cooling liquid may damage your eyes.

Always wear ear protection! Most of the machines generate acoustic pressure up to 80 dB and may damage your unprotected hearing.

Do not wear jewellery and always tie back long hair! Moving machine parts can catch jewellery or loose hair and may cause serious injuries.

Operate the machine only when you are fit enough for work. Illnesses or injuries diminish concentration.

Avoid machine work, which may jeopardize the safety of you and your colleagues!

1.3. Safety instructions for machine operator

Attention!
Machine can only be operated by a person older than 18 years!
Machine can be operated only by a person physically and mentally fit for this activity.

Machine can only be operated only by one person at a time. Machine operator is responsible for other people present near the machine.

The person who is operating the machine using the control elements (control panel and other) must not either alone or with help of other workers move the cut or otherwise machined material at the same time.

Follow the instructions and directives for work safety!
Read the operating instructions before you start to work on the machine! Keep the operating instructions in good condition!

Close covers before starting the machine and check, if the covers are not damaged. Damaged covers must be repaired or replaced immediately. Do not start the machine, if any cover is removed!

Attention!
Do not connect the machine to electricity if the door or any covers are removed. Do not touch the high voltage

- Check, if the electric cables are not damaged.
- Do not hold or manipulate the material during clamping or cutting!
- Do not operate the buttons and switches on the control panel wearing gloves! You may press a wrong button.
- Make sure, that there is nobody in the working area of the machine (the working area of the vice, the saw band, the saw arm etc.) during a working cycle and when starting the machine.
- Under no circumstances touch any rotating elements.
- Use the machine only when it is in a good condition!
- Check at least once in a shift, if the machine is not visibly damaged. If you discover any such damage, you must bring the machine to a halt and inform your superior!
- Keep your working area and machine clean and uncluttered! Ensure sufficient lighting in the working area.
- Take off any spilt water or oil from the floor and dry it immediately to avoid a possibility of injury.
- Do not touch the cooling liquid with bare hands!

- Do not adjust the cooling liquid nozzle if the machine is running.
- Do not remove the chips from the working area of the machine, when the machine is running!
- Do not use compressed air for machine cleaning or for chip removal!
- Use protective gear for chip removal!

1.4. Safety notes for the servicing and repairs

Attention!
Only a qualified professional can carry out the servicing and repairs of the electrical equipment! Take special care during the work with electrical equipment. High voltage shock can have fatal consequences! Always follow the work safety instructions! Otherwise, there is possibility of heavy injury!

Switch off the main switch and lock it, before you start service work! This way you eliminate a possibility of starting the machine accidentally.

Take care when manipulating the frequency converter. It is still energized for 20 minutes after machine shutdown.

Always adhere to the safety instructions!

Only an authorized professional can carry out the servicing and repairs.

For parts replacement, use only those, which are identical with the originals. Otherwise, there is possibility of health hazard.

Use only recommended types of hydraulic oils, oils and lubricants!

Do not remove or lock the limit switches or any other safety equipment!

Any use of the saw, accessories or machine parts other than that intended by BOMAR, spol. s r.o. company is not permitted. The guarantee on this product will be lost afterward and BOMAR, spol. s r.o. takes no responsibility for damage caused.

Do not turn the machine on if all covers are not in place.

1.5. Safety accessories of the machine

The machine is equipped with safety accessories. They protect the operator from injuries and the machine from damage. The safety accessories include blocking accessories, emergency switches and covers. Check the function of safety accessories regularly once a week. If the safety accessories are not fulfilling their function, interrupt your work and repair or replace the faulty accessory.

Enhanced risk!
Do not come into or intervene in the cutting area. Otherwise, there is a danger of injury, cutting or squeezing.

1.5.1. Total Stop

TOTAL STOP button is used for emergency switching – off of the machine in a case of defect or health hazard. By pressing the TOTAL STOP button the supply of electrical power is interrupted.

If any faults or states of emergency appear, immediately press the TOTAL STOP button!

Release of pressed button is possible by twisting the upper part of the button.

1.5.2. Saw arm cover

If the cover is opened during operation, the limit switch is opened and the band saw is stopped. The machine cannot be run with the arm cover open even in the service mode. The band saw can be first started, when the cover is closed!

1.5.3. Saw band cover

This protective cover envelops the saw band stretching from the guiding cube to the arm.

Never switch on the saw if this cover is not mounted!

1.5.4. Feeding vice cover

This cover prohibits access to the feeding vice during operation, thus protecting the workers from injury.

If the cover is opened during cutting, the limit switch is disconnected (see. arrow) and the machine is stopped. It is not possible to start the machine even in service mode.

The band saw can only be turned on, when the cover is closed!

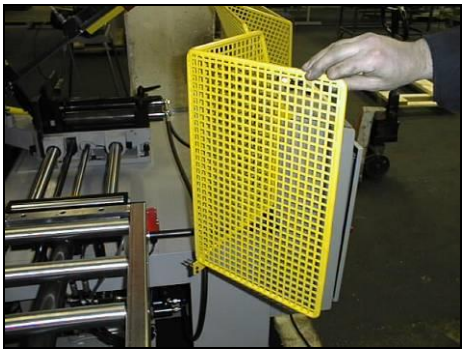

1.5.5. Saw band stretching and rupture inspection

This device checks the saw band tension and causes immediate machine halt if the band accidentally ruptures.

The device includes a limit switch. Its adjustment is described in chapter „Maintenance". Check the switch carefully and periodically – adjust it if necessary.

1.6. Safety notes for the cooling

Attention!

- *When handling the coolant always keep to the work safety directives and instructions of the manufacturer.*
- *When handling cooling agents always wear safety fluid-proof gloves!*
- *Wear protective goggles!*
- *Cooling liquid can get in contact with your eyes and may cause severe injuries*

1.6.1. Instructions for first aid

1. Pull off and safely remove polluted, soaked clothing.
2. If inhaled, go outside on fresh air or look for first aid treatment.
3. Wash with water and eventually treat with crème any points of contact with the skin.
4. Rinse your eyes with water and seek out a doctor.

1. If swallowed, drink a lot of water and induce vomiting. Look for medical help.

1.7. Umístění štítku stroje / Maschinenschild position / Position of machine label

Machine label is placed on band saw's base.

1.8. Umístění bezpečnostních značek / Verteilung der Sicherheitszeichen / Position of safety symbols

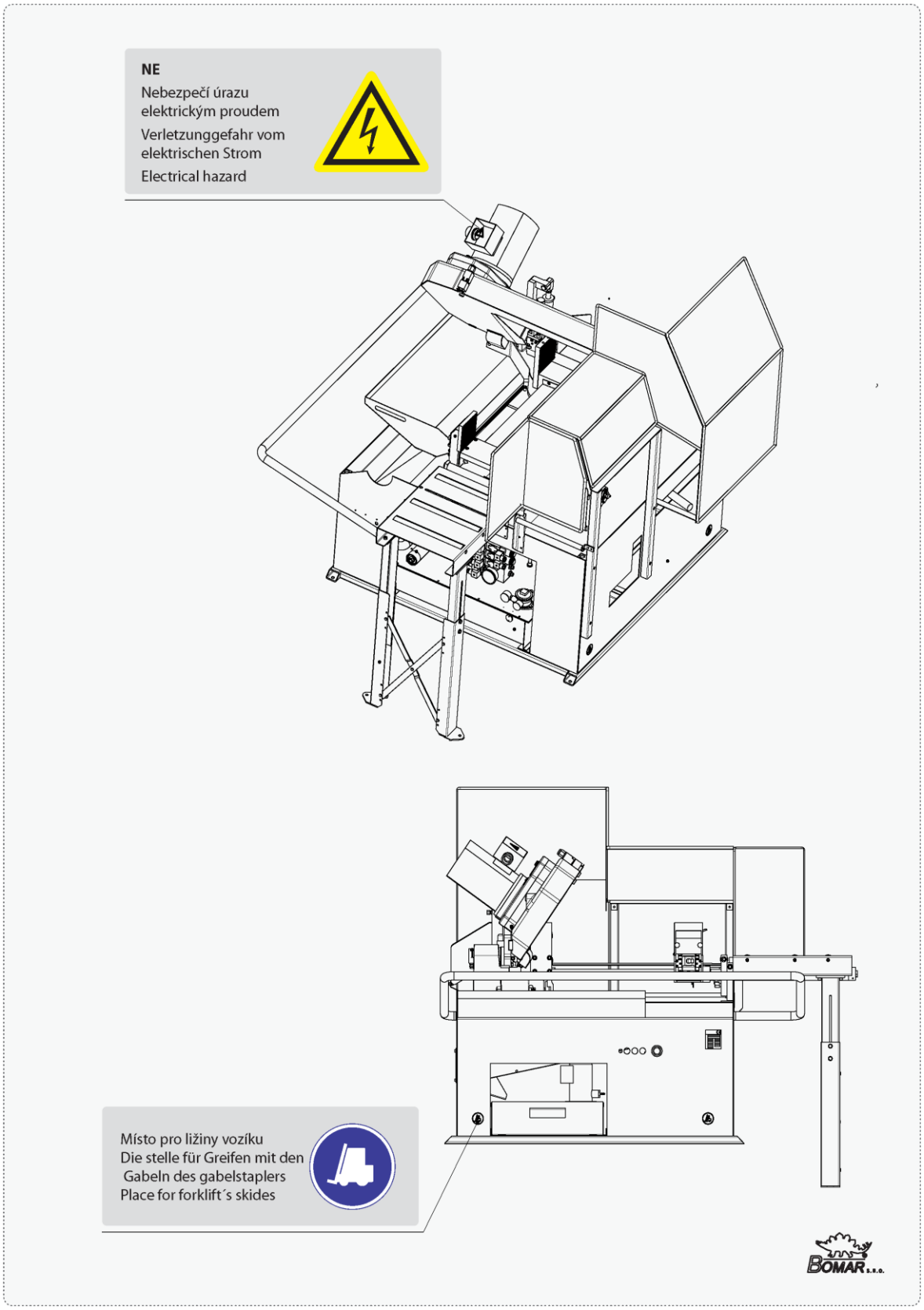

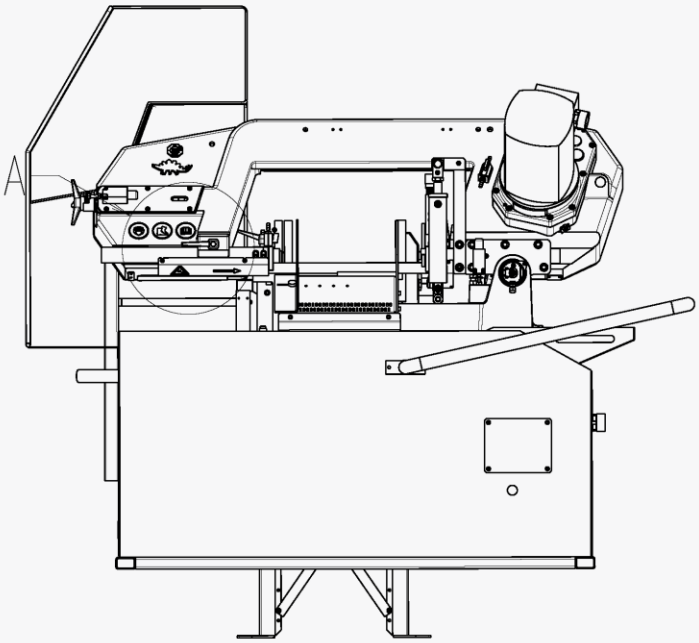

PO:
Noste pevnou pracovní obuv
Tragen Sie Sicherheitsschuhe
Wear fixed protective shoes

CZ:
Přečíst návod k použití
Bedienungsanleitung lesen
Read the operating instructions

OBS:
Noste ochranné brýle a sluchátka
Tragen Sie eine Schutzbrille und Gehörschutz
Wear protective googles
and headphones

SP:
Směr pohybu
Bewegungsrichtung
Direction of motion

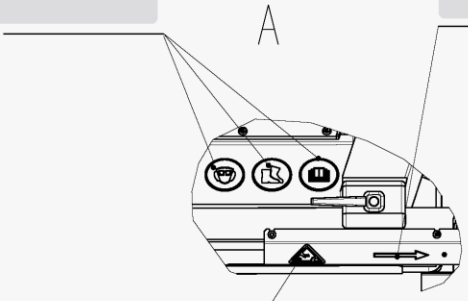

NR:
Nebezpečí říznutí
Schnittgefahr
Cutting or severing hazard

2. Dokumentace stroje / Dokumentation der Maschine / Machine documentation

2.1. Technická data / Technische Daten / Technical data

Hmotnost stroje / Maschinengewicht / Machine weight:	
• Hmotnost / Gewicht / Weight	575 kg
Rozměry stroje / Maschinengröße / Machine size :	
• Délka / Länge / Lenght	2140 mm
• Šířka / Breite / Width	1710 mm
• Výška / Höhe / Height	1700 mm
Elektrické vybavení / Elektrische Ausrüstung / Electical equipment:	
• Napájení / Versorgungsspannun / Supply voltage	~ 3×400V, 50H
• Příkon / Gesamptschlusswert / Total Input	2,6 kW
• Max.jištění / Max. Vorschaltsicherung / Max. Fuse	16 A
• Krytí / Schutzart / Protection	IP 54
Akustický tlak / Schalldruckpegel / Acoustic pressure:	
• Ergonomic 290.250 GAC	L_{Aeqv} = 65 dB
Pohon / Atrieb / Drive:	
• Typ / Typ / Type	TM90 2S B5
• Napájení / Versorgungsspannun / Supply voltage	~ 3×400 V/230 V, 50 Hz
• Výkon / Leistung / Output	1,5 kW
• Jmenovité otáčky / Motornenndrehzahl / Nominal speed	2850 min^{-1}
Chladící zařízení / Kühlmiteleinrichtung / Cooling equipment:	
• Výkon / Leistung / Output	0,05 kW
• Obsah nádrže / Volumen vom Kühlmittel / Capacity	20 dm^3
Rozměr pásu / Sägebanddimension / Band size:	
2910×25 (27)×0,90 mm	
Řezná rychlost / Schnittgeschwindigkeit / Cutting speed:	
Variator: 40/80 m/min	
Frequency converter: 20–90 m/min	

Řezné rozsahy / Schnittbereiche / Cutting size:

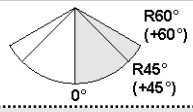

0°	Ø250 mm	290×230 mm	290×230 mm	240×240 mm
R 45° (+45°)	Ø210 mm	220×80 mm	190×230 mm	190×190 mm
R 60° (+60°)	Ø120 mm	120×80 mm	120×100 mm	100×100 mm

Level of acoustic pressure:

The equivalent level of the acoustic pressure A (noise) at the position of the operator is L_{Aeqv}= 65 dB. The values are indicating the emission levels and may not present safe working levels. Among factors, which influence real values of the operator's exposure, are properties of the workshop room, type of cut material and level of wear of the saw band – these may significantly influence the exposure levels.

2.2. Rozměrové schéma / Aufstellzeichnung / Installation diagram

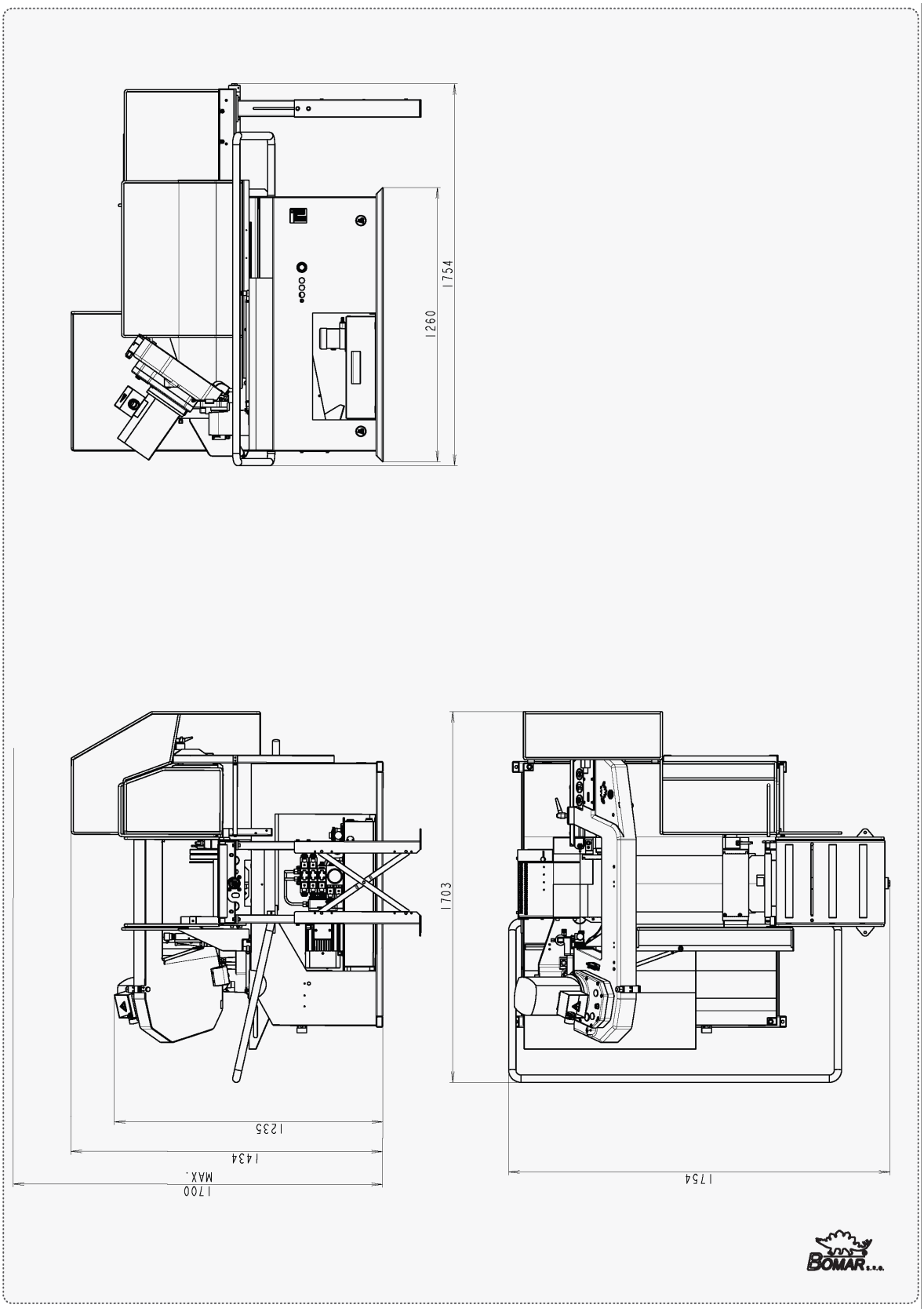

2.3. Popis / Beschreibung / Description

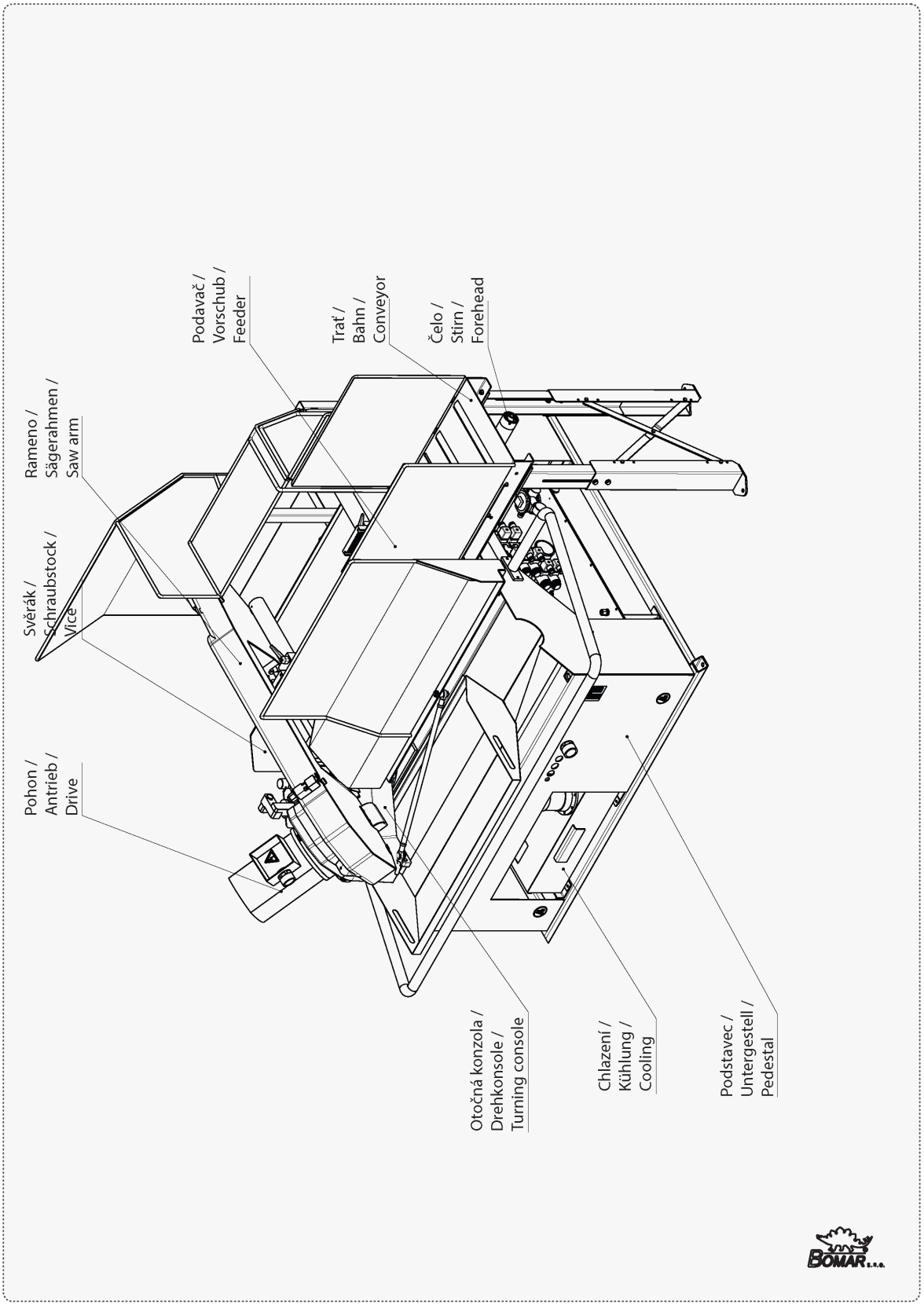

2.4. Transportation and stocking

2.4.1. Conditions for transportation and stocking

Follow the recommendations of the manufacturer for transportation and stocking! If the recommendations are not kept, damage may occur to the machine.

- Don't use a forklift truck for handling the machine, if you do not have a license for it!
- Don't move under suspended loads! Fault in the lifting device may cause a serious injury.
- Keep a safe distance from the machine during transport.
- Temperature of the air must be between **-25°C and 55°C**, for a *short period* (max. 24 hours) up to *70°C*.
- Do not expose the machine to radiation (microwave radiation, ultraviolet radiation, laser radiation, x-ray radiation). Radiation can cause problems with the machine function and deteriorating of the condition of the insulation.
- Take measures, to prevent damage by dampness, by vibrations and by shakes.

2.4.2. Transport and stocking preparations

- Tighten the vice and thoroughly oil all smooth surfaces.
- Lower the saw frame to the lowest position.
- Make sure to empty the machine of all traces of cooling agent.
- Fasten all loose parts securely to the machine.
- Pack and wrap the control panel securely to avoid damage during transport.
- Put stickers stating the minimum approximate machine weight to at least five well visible places.

The machine has to be screwed to a pallet for transportation. Make sure the pallet is firm enough to be able to hold the saw!

2.4.3. Transport and stocking

The machine must be secured sufficiently during transportation so it won't roll over or fall off the vehicle.

Fasten the pallet to the floor of the vehicle.

Beware of damaging the machine during transportation.

It is forbidden to handle the machine in any way different from that written in these operating instructions (for example lifting it by the saw arm); the machine could get damaged!

Store the machine only under conditions mentioned in the manual to avoid damaging it.

2.5. Transportní schéma / Transport schéma / Transport schneme

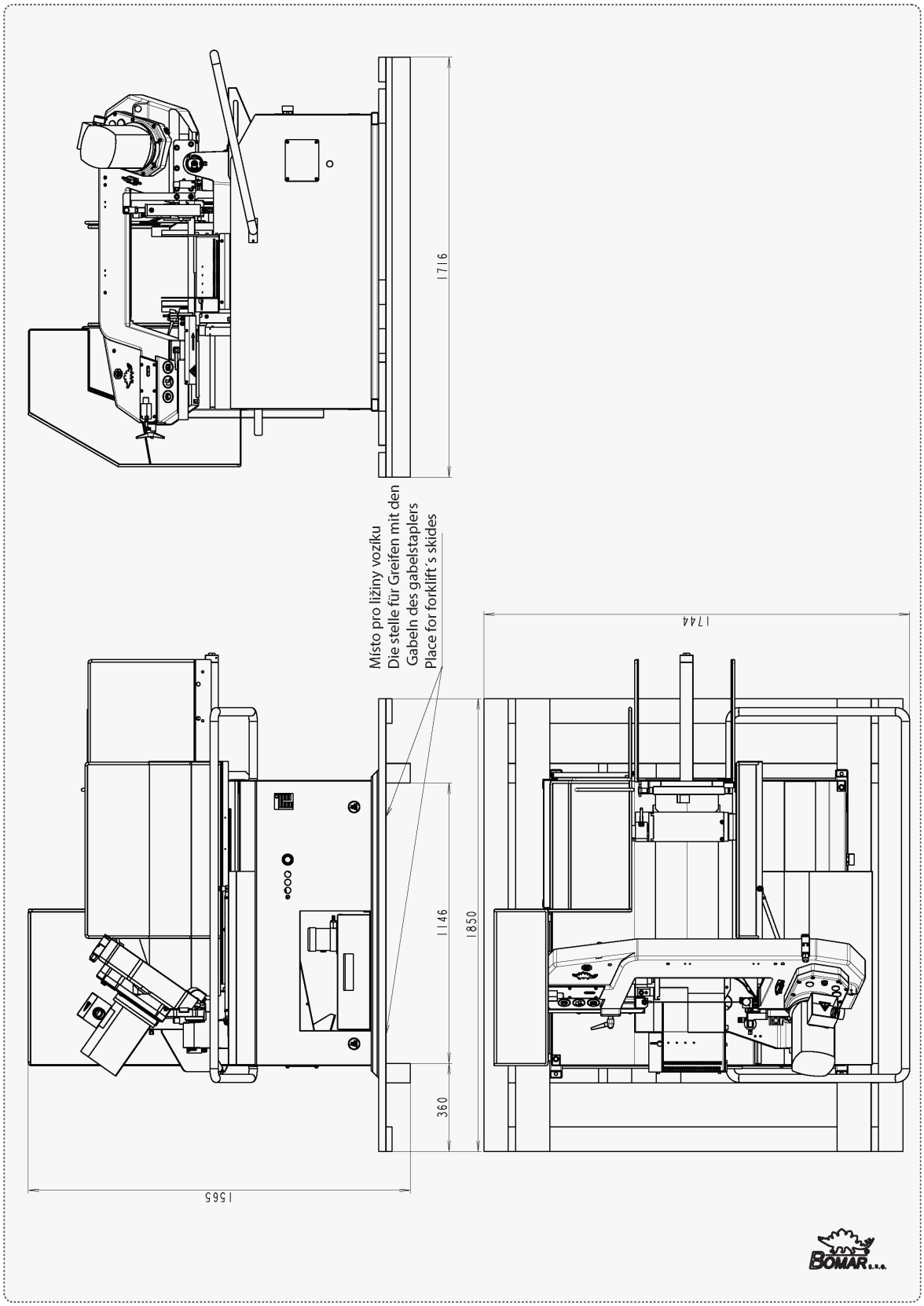

2.6. Activation

2.6.1. Machine working conditions

Keep the conditions of the manufacturer for machine operation! If the recommendations are not kept, damage can occur to the machine.

The manufacturer warrants the correct function of the machine for these conditions:

- At air temperature from *10°C to 40°C*; the temperature average during 24 hours must *not exceed 35°C*.
- At relative dampness of the air in the interval from 30% to 95% (not condensing). Altitude up to 1000 meters.
- Do not expose the machine to any radiation (microwave radiation, ultra-violet radiation, laser radiation, x-ray radiation). Radiation can cause problems with the machine function and deteriorate the condition of the insulation.

2.7. Band saw unpacking and assembling

Remove the wrapping from the machine and unpack all parts.

Attention!
Switch off the main switch and lock it in position, before you start the assembly! Otherwise, there is a possibility of accidental machine starting.

2.7.1. Machine installing and leveling

Check the floor supporting capacity before installing the machine. If the floor capacity does not meet the requirements, you must ready a necessary base for the machine.

Minimal requirement:

machine weight – Ergonomic 290.250 GANC – 950 kg

+ weight of the accessories

+ maximum weight of material

1. The machine must be leveled horizontally. All feet of the machine must touch the floor after leveling.
2. The machine must be leveled by means of a calibrated spirit level. Put the spirit level on the loading surface of the vice. Adjust the roller conveyors according to the spirit level.
3. For machine leveling, take care that there is sufficient space available for operation, repair work, servicing of the machine and handling of the material.
4. The machine and all appended parts and accessories must be visible from the place of operation

2.8. Machine disposal after lifetime

Pour all service fluids (cooling liquid, hydraulic oil) from the machine over into designated reservoirs. Dismantle machine into separate parts and dispose of them in accordance with valid directives.

2.9. Kotevní plan / Verankerungsplan / Grounding plan

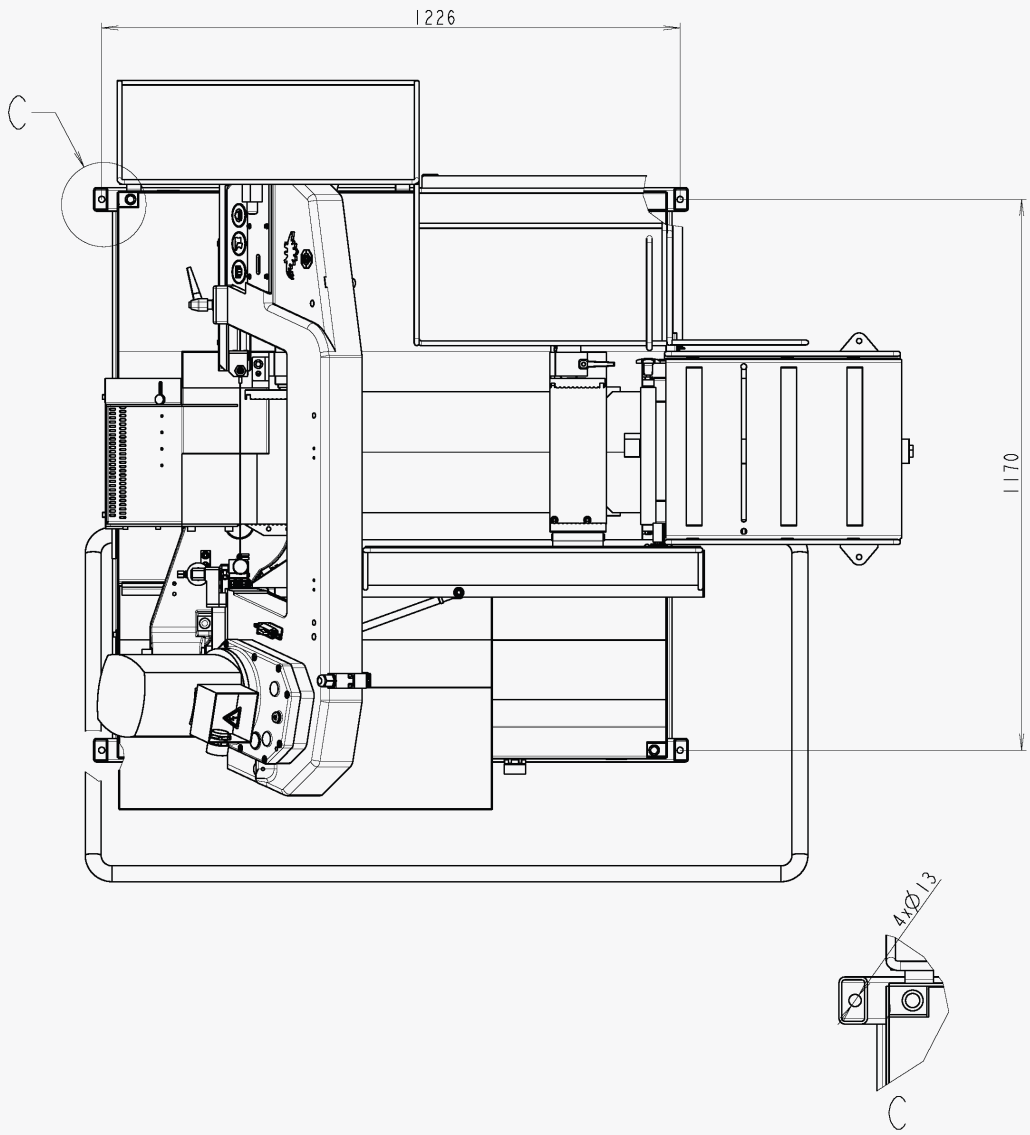

Kotvící materiál / Verankerungsmaterial / Grouding material

- 4× Chemická hmoždina / Chemische Dübel / Chemical Plug
- 4x ø12mm Vrtáno do hloubky / In die Tiefe gebohrt / Drilled to – 140 mm
- Šrouby / Schraube / Screws – 4xM12

Šrouby podložit deskami o min. rozměrech P10×100-100
- Die Schrauben mit Platten mit Minimaldimensionen P10×100-100 unterlegen
Screew must be bottomed with plates (min. dimensions P10×100-100)

Požadavky na rovinnost podlahy / Anforderungen an die Bodenebenheit / Requirements for floor flatness

± 10 mm / 1 m

2.10. Electrical connection

Attention!
Only a qualified professional must carry out the servicing and repairs of the electric equipment! Take special care during work with the electrical equipment. High voltage accident can have fatal consequences! Always follow instructions for work safety.

Electrical parameters of the machine:

- Service voltage: ~ 3×400 V, 50 Hz, TN-C-S
- Total input / 2,6 kW
- Max. fuse: 16 A

Note:
Values of the cross section of the conductor and the rated current can be found in the regulations.

Before connecting the machine turn off the main power switch and ensure a dry area for the connection work.

Service voltage must agree with the line voltage! Cross section of the supply line must respond with the rated current for max. machine load.

Note:
A socket with fork can be used only for machines with the rated current less than 16 A and total input less than 3 kVA.

In case the machine is connected directly to the electrical network terminals, an extra main switch which can be locked in zero position must be added.

Attention!

In this case the extra switch on the electrical line becomes the primary switch and the main switch on the machine has only a secondary

2.10.1. Direction of the saw band check

After the machine has been successfully connected, switch on the machine and run the driving engine of the band briefly. The movement of the band must be in agreement with the direction of the arrow on the saw band cover.

If the direction of the saw band does not agree, the phases at the terminal line must be switched.

2.10.2. Check machine connection into electrical network

Attention!
When you connect the machine to the electrical network observe correct connection of all phases! ENGINE IN IN HYDRAULIC AGGREGATE CANNOT BE OPERATED WITH REVERSE TURNING MORE THEN 10 SECONDS!!!

2.11. Filling of the cooling system

Prepare a mixture of water and a cooling liquid. Keep the concentration specified by manufacturer. Remove the cover from the drainage hole.

Pour the mixture into the tank of the cooling system.

When filling the tank with the cooling liquid, take care that the liquid does not drip out of the tank and that the tank does not overflow.

When adding anticorrosion agents, antifreeze and other chemicals follow the instructions of the manufacturer! By mixing various products poisonous and aggressive chemicals can be created that can damage your health or the cooling equipment of the machine.

Note:
If the machine is equipped with a Microniser, fill the Microniser with prescribed cooling liquid. This makes the Microniser ready for operation.

2.12. Putting into operation of the hydraulic unit

Before the first run check:

- the tank is filled with the prescribed oil to upper limit
- pump is not running in the opposite direction. Hydraulic generator must not be operated in opposite directions of rotation for longer than 5-10 seconds.
- connections are properly tightened, pipes assembled without internal stress
- wiring matches with electrical and hydraulic diagrams
- the electric motors (pump and cooler) are properly connected and have the prescribed rotation
- the hydraulic accumulator with nitrogen gas to the specified value
- aux. elements work right (thermometer, level gauge, heater)

First run (Attention – working pressure on securing valve is set by producer in accoring the hydraulic diagram):

- In the short intervals activate an electric pump
- check for leaks and noise
- Bleed the hydraulic circuit
- if possible, test the circuit function with minimum load

- test the electrical equipment

- during operation monitor measuring equipment, noise, height and temperature of oil in the tank
- During this time a careful bleeding off for the whole hydraulic system is necessary. In case there is no bleeder port, the power pack will bleed itself after a while via the air breather on the tank or the return line filter.
- After multiple start-up.

2.12.1. Filling the reservoir with hydraulic oil

Oil regulations and recommendations of the manufacturer in the technical documentation (appendix) are to be carefully observed. For standard power packs we recommend the oiltype OH-HM32 (DIN 51524) of all known oil manufacturers.

Power packs have to be filled up with clean, pre-filtered oil! The purity of the hydraulic fluid must correspond to the class 10 NAS 1638 (reachable with filter ß =75)!

Filling from container, such as barrels, backets, etc. is not recommended or permitted!

The maximum oil level will be shown on the upper marking at the dipstick or the sight level glass. Overfilling has to be prevent. The maximum filling rate of 15 l/min shouldn´t be exceed..

Oil type	Kinematic viscosity v in mm^2/s in relationship to the fluid temperatur					Freezing point
	0°C	20°C	40°C	60°C	80°C	°C
OH-HM 32	220	100	32	15	7	-40
OH-HV 32	180	67	32	17	11	-40

2.13. Machine functions check

Before you proceed with the check study the instructions in this manual thoroughly.
Do not proceed with the check if you did not fully understand all control elements and machine functions.

Check, if the machine or some parts of the machine were not damaged during transport.

Check, if all covers are installed and functional.

Check (with the Tenzomat) if the saw band is correctly stretched. If it is necessary, stretch the saw band. Correct values of the saw band tension are on the Tenzomat.

Switch on the main switch and check the motors and aggregates (saw band drive, hydraulic pump, cooling pump, swarf conveyor).

Fully open and then close the main vice and the feeder vice. Move the feeder from one end to the other. Turn the saw frame of the band saw from one outer position to the other. Raise the saw frame to the top position and then lower the saw frame to the lowest position.

Start the machine with the cooling pump and let it run without load until the cooling system will be filled with cooling liquid. As soon as the cooling liquid starts to escape from the nozzles of the cooling system, the cooling system is ready for operation.

Carry out one cutting cycle without any material. Check, if the machine runs with no irregularities. If all machine functions run properly, the machine is ready for operation.

2.14. Saw band

Remove the saw band cover only after you have installed and stretched the saw band a bit. This way you minimize the risk of injury.

2.14.1. Saw band size

2910×25 (27)×0,90 mm

2.14.2. Selection of the saw band tooth system

The manufacturers provide the saw bands with constant and variable tooth systems. The important factor for selection of the tooth system is the length of the cutting channel with respect to the size of the product.

1. *Constant tooth system* – the saw band has a constant tooth pitch all over its length. This type is suitable for cutting solid materials.
2. *Variable tooth system* – tooth pitch is variable. Variable tooth system is used for profiled materials and bundle cutting. Variable tooth pitch lowers vibrations of the saw band, increases service life of the saw band and quality of the cut.

> *BOMAR recommends variable tooth system for its band saws.*

In the table below the type of the tooth system depending on the sizes and profile of the cutting material is advised.

Footnotes:

Z_pZ – teeth number on one inch S – tooth with zero angles of the teeth K – tooth with positive angle of the teeth

Examples of the tooth system marking:

32 S – number „32" means 32 teeth per inch (constant tooth system), letter „S" marks teeth with zero angle with respect to the band.

4–6 K – number „4–6" means 4 to 6 teeth per inch (variable tooth system); letter „K" marks teeth with positive angle with respect to the band

2.14.3. Saw band running-in

For reaching a full lifespan of the band we recommend performing a running-in.

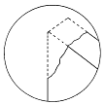

Running-in: Perform a cut with the frame lowering speed at 50%. If vibrations occur increase or decrease the band's speed. When cutting large pieces run the band for approximately 15 minutes.

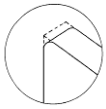

When the band has been run-in, increase the lowering speed of the arm to normal. The running in of the saw band avoids micro chips on the cutting edges of a new saw band ensuing from first excessive stress. This would decrease its lifespan substantially.

> ***Note:***
> ***Run-in reground saw bands too.***

The optimal running in of the saw band produces ideal rounded cutting edges and therefore the conditions for an optimal service life are met.

2.15. Table for teeth selection

SHAPED MATERIAL (D_p, S = mm)

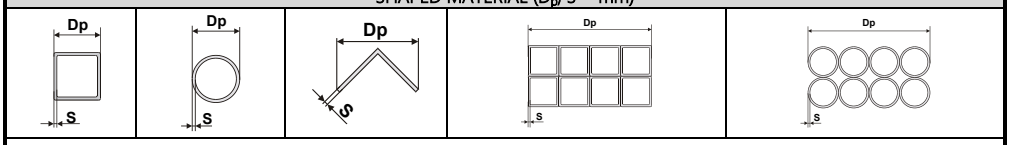

Note: Table shows tooth system selection for cutting one piece of selected profile. When cutting more pieces of the selected profile (bundle), you must double the corresponding wall thickness of the profile to get an accurate estimation (i.e., wall thickness equates to 2×S). There are constant and variable tooth systems in the table.

Size of the wall S [mm]	Tooth system (Z_pZ) Outer diameter of the profile D_p [mm]					
	20	40	60	80	100	120
2	32 S	24 S	18 S	18 S	14 S	14 S
3	24 S	18 S	14 S	14 S	10–14 S	10–14 S
4	24 S	14 S	10–14 S	10–14 S	8–12 S	8–12 S
5	18 S	10–14 S	10–14 S	8–12 S	6–10 S	6–10 S
6	18 S	10–14 S	8–12 S	8–12 S	6–10 S	6–10 S
8	14 S	8–12 S	6–10 S	6–10 S	5–8 S	5–8 S
10	-	6–10 S	6–10 S	5–8 S	5–8 S	5–8 S
12	-	6–10 S	5–8 S	5–8 S	4–6 K	4–6 K
15	-	5–8 S	5–8 S	4–6 K	4–6 K	4–6 K
20	-	-	4–6 K	4–6 K	4–6 K	3–4 K
30	-	-	-	3–4 K	3–4 K	3–4 K
50	-	-	-	-	-	3–4 K

Size of the wall S [mm]	Tooth system (Z_pZ) Outer diameter of the profile D_p [mm]					
	150	200	300	500	750	1000
2	10–14 S	10–14 S	8–12 S	6–10 S	5–8 S	5–8 S
3	8–12 S	8–12 S	6–10 S	5–8 S	4–6 K	4–6 K
4	6–10 S	6–10 S	5–8 S	4–6 K	4–6 K	4–6 K
5	6–10 S	5–8 S	4–6 K	4–6 K	4–6 K	3–4 K
6	5–8 S	5–8 S	4–6 K	4–6 K	3–4 K	3–4 K
8	5–8 S	4–6 K	4–6 K	3–4 K	3–4 K	3–4 K
10	4–6 K	4–6 K	4–6 K	3–4 K	3–4 K	2–3 K
12	4–6 K	4–6 K	3–4 K	3–4 K	2–3 K	2–3 K
15	4–6 K	3–4 K	3–4 K	2–3 K	2–3 K	2–3 K
20	3–4 K	3–4 K	2–3 K	2–3 K	2–3 K	2–3 K
30	3–4 K	2–3 K	2–3 K	2–3 K	1,4–2 K	1,4–2 K
50	2–3 K	2–3 K	2–3 K	1,4–2 K	1,4–2 K	1,4–2 K
75	-	2–3 K	1,4–2 K	1,4–2 K	1,4–2 K	0,75–1,25 K
100	-	-	1,4–2 K	0,75–1,25 K	0,75–1,25 K	0,75–1,25 K
150	-	-	-	0,75–1,25 K	0,75–1,25 K	0,75–1,25 K
200	-	-	-	0,75–1,25 K	0,75–1,25 K	0,75–1,25 K

SOLID MATERIAL (D = mm)

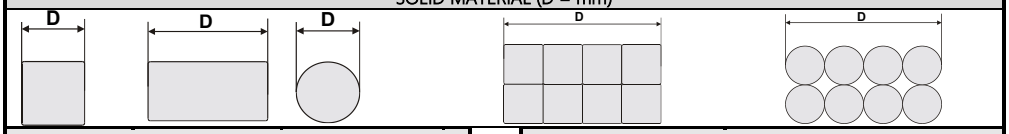

Constant tooth system		Variable tooth system	
length of the cut D	tooth system (Z_pZ)	length of the cut D	tooth system (Z_pZ)
to 3 mm	32	to 30 mm	10 –14
to 6 mm	24	20–50 mm	8–12
to 10 mm	18	25–60 mm	6–10
to 15 mm	14	35–80 mm	5–8
15–30 mm	10	50–100 mm	4–6
30–50 mm	8	70–120 mm	4–5
50–80 mm	6	80–150 mm	3–4
80–120 mm	4	120–350 mm	2–3
120–200 mm	3	250–600 mm	1,4–2
200–400 mm	2	500–3000 mm	0,75–1,25
300–800 mm	1,25		
700–3000 mm	0,75		

In spite of the proposals above, consider your supplier's recommendations and ask him for professional advice even though the manufacturers will often recommend their own saw bands.

3. Ovládání stroje / Machine control / Bedienung der Maschine

3.1. Starting the saw

» • Turn on the main switch of the ban saw. It is located on the switchboard of the control panel.

• Switch on the safety circuitry – button no. 10 on the control panel

Switching on of the safety circuits is indicated by a lit orange control light on button no. 10.

Without the safety circuits switched on it is impossible to start any of the machine regimes.

3.2. Control panel

3.2.1. Ergonomic 290.250 GAC without frequency converter

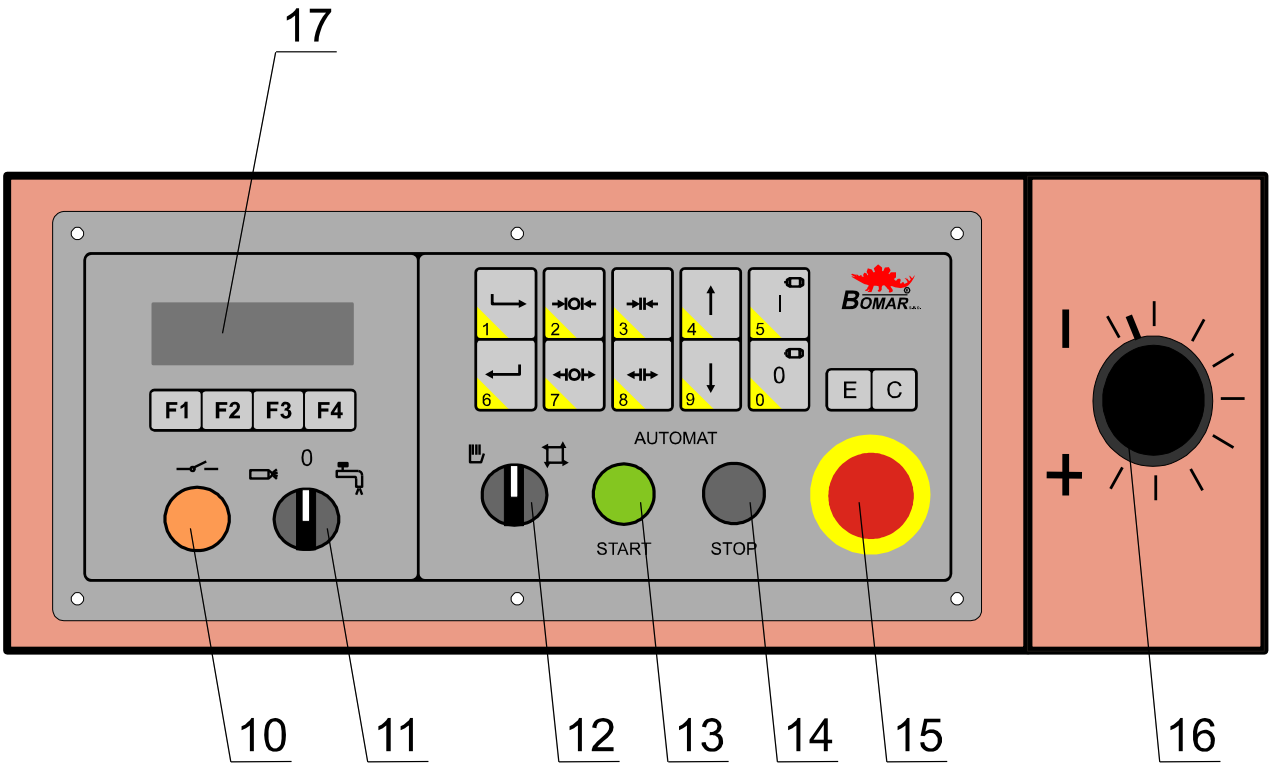

C	C button It is used for deleting of the set value.
E	E button It is used for confirming of the set value.
F1	F1 – Functional button Button function is described below in the text.
F2	F2 – Functional button Button function is described below in the text.
F3	F3 – Functional button Button function is described below in the text.
F4	F4 – Functional button Button function is described below in the text.
0	Switch off the band engine
1	Feeder to the forward position
2	Clamp the feeding vice

3	Clamp the main vice
4	Lift the saw arm up
5	Switch on the band engine
6	Feeder to the rear position
7	Open the feeding vice
8	Open the main vice
9	Lower the saw arm down
10	Switch on the safety circuit Switch on the safety circuit by pressing button.
11	Cooling system selection You can select from three possibilities: Cooling with Microniser 0 Without cooling Cooling with water
12	Mode selection You can select from three possibilities: Manual mode 0 Resting state (service menu) Automatic mode
13	START button It starts the cutting cycle.
14	STOP button It stops the cutting cycle.
15	TOTAL – STOP button Shutting the machine down in emergency!
16	Throttle valve Adjust the speed of the arm sinking to the cut by throttle valve. Notice: If you keep closing the throttle valve too tightly, the valve seat may wear off which causes its leakage. Therefore, close the valve always gently.
17	Display It appears the actual operating mode and it allows the dialogue with operator.

3.2.2. Ergonomic 290.250 GAC– with frequency converter

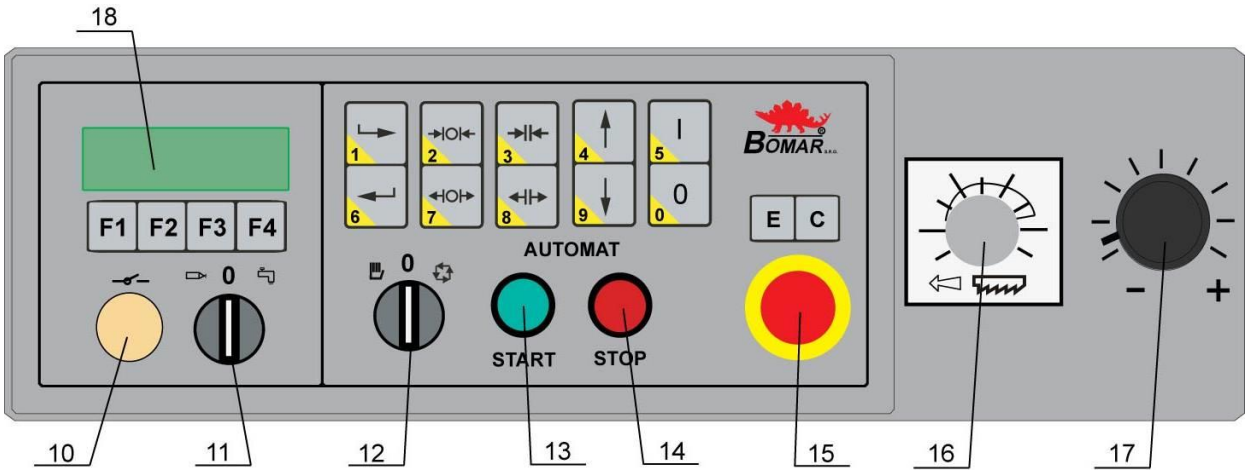

C	C button It is used for deleting of the set value.
E	E button It is used for confirming of the set value.
F1	F1 – Functional button Button function is described below in the text.
F2	F2 – Functional button Button function is described below in the text.
F3	F3 – Functional button Button function is described below in the text.
F4	F4 – Functional button Button function is described below in the text.
0	Switch off the band engine
1	Feeder to the forward position
2	Clamp the feeding vice
3	Clamp the main vice
4	Lift the saw arm up
5	Switch on the band engine
6	Feeder to the rear position

7	Open the feeding vice
8	Open the main vice
9	Lower the saw arm down
10	Switch on the safety circuit Switch on the safety circuit by pressing button.
11	Cooling system selection You can select from three possibilities: Cooling with Micronizer 0 Without cooling Cooling with water
12	Mode selection You can select from three possibilities: Manual mode 0 Resting state (service menu) Automatic mode
13	START button It starts the cutting cycle.
14	STOP button It stops the cutting cycle.
15	TOTAL – STOP button Shutting the machine down in emergency!
16	Frequency converter Turn to change the speed of the saw band
17	Governing valve Adjust the speed of the arm sinking to the cut by governing valve. Notice: If you keep closing the throttle valve too tightly, the valve seat may wear off which causes its leakage. Therefore, close the valve always gently.
18	Display It appears the actual operating mode and it allows the dialogue with operator

3.3. Referencing

```
"   MODE SELECTION   "
" Mode select. Switch "
" is in position '0' "
"<REFER>    <SERVICE>"
```

F1 F2 F3 F4

1. Press button F1, enter to menu: Reference.

```
" AUTOMATIC SETUP OF "
" REFERENCE POSITION "
"       FEEDER       "
"       <START>      "
```

F1 F2 F3 F4

2. Press button F2. Feeder drives to the reference position.

```
" REFERENCE POSITION "
"       FEEDER       "
"    SET CORRECTLY   "
"         <OK>       "
```

F1 F2 F3 F4

3. As soon as the notice "Feeder reference position is set correctly" appears on the display, press button F2. Reference position is set.

3.4. Semi-automatic cycle

In is possible to perform individual cuts in semi-automatic mode. Setting of the desired length is done semi-automatically.

1. Turn switch **12** into position „ ".
2. Open the main and feeding vice with buttons **7** and **8**.
3. Insert material into the feeding vice.
4. Clamp the material with button no. **2** in the feeing vice.
5. With buttons **1** and **6** move the material into the desired length you want to cut.
6. Clamp the material in the main vice with button no. **3**.
7. Choose the type of cooling using switch no. **11**:

	Microniser cooling(should it be installed)
0	No cooling
	Water cooling

8. Now press the START button. The saw will cut the material.
9. After the cut is finished the saw arm will move into the upper position and the START button begins to flash. Now you can remove the cut material.

3.4.1. Cycle interruption

1..	Press the **STOP** button (no.14 – control panel) – the saw will interrupt the cut and the arm moves into the starting position, the saw band drive is stopped.
2.	Press the emergency **TOTAL STOP** button (no. 15 – control panel) in a case of emergency! The safety circuit is disengaged. The saw band drive is stopped as well.

3.5. Automatic cycle programming

The band saw allows preset and store 10 programmes. Each of the programs has 20 pre-selections.

You can change or clear the adjusted pre-selection in the stored program. You can insert the new pre-selection.

Definition explain:

Pre-selection is programme part, which includes the length of blank and pieces number of the set length.

Program consists of 20 pre-selections and it is performed during automatic cycle.

3.5.1. Program creation

```
" STEP No.:1 from 20 "
" Length:      0.0 mm "
" Pieces:        0 pcs."
"<BACK>  <NEXT> <-FN->"
```

F1 F2 F3 F4

1. Adjust the length of blank. Press button F2.

```
" STEP No.:1 from 20 "
" Length:      0.0 mm "
" Pieces:        0 pcs."
"<BACK>  <NEXT> <-FN->"
```

F1 F2 F3 F4

2. Adjust the pieces number. Press button F2.

```
" STEP No.:2 from 20 "
" Length:      0.0 mm "
" Pieces:        0 pcs."
"<BACK> <NEXT> <-FN->"
```

F1 F2 F3 F4

3. Pre-set the other pre-selections by repeating points 1 and 2.

```
" STEP No.:3 from 20 "
" Length:     0.0 mm  "
" Pieces:       0 pcs. "
"<BACK> <NEXT> <-FN->"
```

F1 F2 F3 F4

4. Set „0" to the length and pieces number on the program end.

3.5.2. Program storing

```
" STEP No.:3 from 20 "
" Length:      0.0 mm "
" Pieces:        0 pcs."
"< BACK> <NEXT> <-FN->"
```

F1 F2 F3 F4

1. Press button **F4**.

```
" EXTENDED EDITING:  "
" 1 = Step           "
" 2 = Memory         "
"<BACK>        <DONE>"
```

F1 F2 F3 F4

2. Press button **2** to enter to menu: Memory.

```
"***     MEMORY    ***"
"F1 = Load program    "
"F2 = Save program    "
"                <BACK>"
```

F1 F2 F3 F4

3. Press button **F2** to store the program.

```
"***     MEMORY    ***"
" Rewrite mem. No:  X "
"                     "
"<BACK>  <OK>         "
```

F1 F2 F3 F4

4. Set the memory number (**0-9**), where you want to store the program. Press button **F2**.

```
" Cutting program was"
"  successfully read  "
"   to memory No: X   "
"        <OK>         "
```

F1 F2 F3 F4

5. Confirm the program storing by pressing button **F2**.

3.5.3. Program selection

```
" STEP No.:3 from 20 "
" Length:      0.0 mm "
" Pieces:        0 pcs."
"<BACK> <NEXT> <-FN->"
```

F1 F2 F3 F4

1. Press button F4 to open the program.

```
" EXTENDED EDITING:  "
" 1 = Step           "
" 2 = Memory         "
"<BACK>        <DONE>"
```

F1 F2 F3 F4

2. Press button 2 to entrance to menu: Memory.

```
"***     MEMORY    ***"
"F1 = Load program    "
"F2 = Save program    "
"              <BACK>"
```

F1 F2 F3 F4

3. Press button F1 to open the program.

```
"***     MEMORY    ***"
" Read memory No:   X "
"                     "
"<BACK>  <OK>         "
```

F1 F2 F3 F4

4. Set the memory number (0-9), from which you want to open the program. Press button F2.

```
" Cutting program was"
"  successfully read "
"  from memory No: X "
"        <OK>        "
```

F1 F2 F3 F4

5. Confirm the program opening by pressing button F2.

3.5.4. Editing existing pre-selection

The length of blank or pieces number is possible to change this way:

```
" STEP No.:3 from 20 "
" Length:   200.0 mm "
" Pieces:      2 pcs."
"<BACK> <NEXT> <-FN->"
```

F1 F2 F3 F4

1. Adjust the pre-selection, which you want to change by pressing buttons F1 and F2.

```
" STEP No.:3 from 20 "
" Length:   200.0 mm  "
" Pieces:      2 pcs."
"<BACK> <NEXT> <-FN->"
```

F1 F2 F3 F4

2. Adjust the new length of the blank. Press button F2.

```
" STEP No.:1 from 20 "
" Length:   100.0 mm  "
" Pieces:      2 pcs."
"<BACK> <NEXT> <-FN->"
```

F1 F2 F3 F4

3. Adjust the new pieces number. Press button F2.

4. Now, you can change pre-selections by repeating points 2 to 4.

5. Store the program according to chapter: Program storing.

3.5.5. New pre-selection inserting

1. Open the program, in which you want to perform the change (see chapter: Program selection).

```
" STEP No.:3 from 20 "
" Length:   200.0 mm "
" Pieces:       2 pcs."
"<BACK> <NEXT> <-FN->"
```

F1 F2 F3 F4

2. Select the pre-selection, where you want to insert the new pre-selection by pressing buttons F1 and F2.

```
" STEP No.:3 from 20 "
" Length:   200.0 mm "
" Pieces:       2 pcs."
"<BACK> <NEXT> <-FN->"
```

F1 F2 F3 F4

3. Press button F4.

```
" EXTENDED EDITING:  "
" 1 = Step           "
" 2 = Memory         "
"<BACK>        <DONE>"
```

F1 F2 F3 F4

4. Press button 1 to entrance to menu: Pre-selection.

```
"*** PROGRAM STEP ***"
"F1= Insert step     "
"F2= Delete step     "
"              <BACK>"
```

F1 F2 F3 F4

5. Press button F1 to insert the new pre-selection to the program. The other pre-selections are shifted.

```
" STEP No.:3 from 20 "
" Length:     0.0 mm "
" Pieces:       0 pcs."
"<BACK> <NEXT> <-FN->"
```

F1 F2 F3 F4

6. Set the new length of the blank. Press button F2.

```
" STEP No.:1 from 20 "
" Length:   100.0 mm "
" Pieces:        2 pcs."
"<BACK> <NEXT> <-FN->"
```

F1 F2 F3 F4

7. Set the new number of the pieces. Press button F2.

8. Now, you can insert the other pre-selections by repeating points 2 to 7.

9. Store the program according to the chapter: Program storing.

3.5.6. Clearing

Clear the adjusted pre-selection from the memory is possible this way:

1. Open the program, in which you want to perform the change (see chapter: Program selection).

```
" STEP No.:3 from 20 "
" Length:   200.0 mm "
" Pieces:        2 pcs."
"<BACK> <NEXT> <-FN->"
```

F1 F2 F3 F4

2. Select the pre-selection, which you want to clear by pressing buttons F1 and F2.

```
" STEP No.:3 from 20 "
" Length:   200.0 mm "
" Pieces:        2 pcs."
"<BACK> <NEXT> <-FN->"
```

F1 F2 F3 F4

3. Press button F4.

```
" EXTENDED EDITING:  "
" 1 = Step            "
" 2 = Memory          "
"<BACK>        <DONE>"
```

F1 F2 F3 F4

4. Press button 1 to entrance to menu: Pre-selection.

```
"*** PROGRAM STEP ***"
"F1= Insert step     "
"F2= Delete step     "
"              <BACK>"
```

F1 F2 F3 **F4**

5. Press button F2 to clear the selected pre-selection from the program. The other pre-selections are shifted.

6. Now, you can clear the other pre-selections by repeating points 2 to 5.

7. Store the program according to chapter: Program storing.

3.6. Automatic cycle with trim cut

If you want to cut the material end before starting of the automatic cycle pre-set, you must continue this way:

1. Automatic cycle performs after pre-set finishing (or after stored program selection).

```
" STEP No.:3 from 20 "
" Length:      0.0 mm "
" Pieces:        0 pcs."
"<BACK> <NEXT> <-FN->"
```

F1 F2 F3 F4

2. Press button **F4** to perform the automatic cycle.

```
" EXTENDED EDITING:  "
" 1 = Step           "
" 2 = Memory         "
"<BACK>        <DONE>"
```

F1 F2 F3 F4

3. Press button **F4**.

4. An appeal for setting the height of the arm over material will appear.

```
"  SETTING THE HEIGHT  "
" OF ARM OVER MATERIAL "
" for return after cut "
"<BACK>      <DONE>    "
```

F1 F2 F3 F4

The saw arm will return to set height after the cutting cycle has ended, if the option for ending the cycle with the arm in upper position was chosen (see Service menu, Cutting parameters).

Move the arm in desired height and confirm set height with pushing the F3 button; set height will be saved.

To cancel the setting push button F1; set height will not be saved.

```
" AUTOMATIC TRIM CUT "
"                    "
"<YES>           <NO>"
```

F1 F2 F3 F4

5. Press button **F1** <YES> for material trimming.

```
" AUTOMATIC TRIM CUT "
"   Press the START  "
"                    "
```

6. Press button **START**. The saw makes the trim cut.

```
" AUTOMATIC TRIM CUT "
"     Wait until     "
" the cut is finished"
```

7. The report about course of cutting appears on the display during material cutting.

```
"  AUTOMATIC CYCLE   "
"    Press button    "
"        START       "
"                    "
```

8. Press button START again. The saw makes the pre-set of automatic cycle.

9. Button START starts to blink after finishing of the automatic cycle. Now you can remove blanks.

3.7. Automatic cycle without trim cut

If you do not want to cut material end before starting of the automatic cycle pre-set, you must continue this way:

1. Automatic cycle performs after pre-set finishing (or after stored program selection).

```
" STEP No.:3 from 20 "
" Length:     0.0 mm "
" Pieces:       0 pcs."
"<BACK> <NEXT> <-FN->"
```

F1 F2 F3 F4

2. Press button F4 to perform the automatic cycle.

```
" EXTENDED EDITING:  "
" 1 = Step           "
" 2 = Memory         "
"<BACK>        <DONE>"
```

F1 F2 F3 F4

3. Press button F4.

```
"  SETTING THE HEIGHT  "
" OF ARM OVER MATERIAL "
" for return after cut "
"<BACK>      <DONE>    "
```

F1 F2 F3 F4

4. An appeal for setting the height of the arm over material will appear.

   The saw arm will return to set height after the cutting cycle has ended, if the option for ending the cycle with the arm in upper position was chosen (see Service menu, Cutting parameters).

   Move the arm in desired height and confirm set height with pushing the F3 button; set height will be saved.

   To cancel the setting push button F1; set height will not be saved.

```
" AUTOMATIC TRIM CUT "
"                    "
"<YES>           <NO>"
```

F1 F2 F3 F4

5. Press button **F4** <NO>, you do not want to trim the material.

```
"  AUTOMATIC CYCLE   "
"    Press button    "
"        START       "
"                    "
```

6. Press button **START**. The saw makes the pre-set of automatic cycle.

7. Button START starts to blink after finishing of the automatic cycle. Now you can remove blanks.

3.7.1. Cycle interruption

1.	Press button **STOP** (button 14 – control panel) – the saw finishes the actual cut, arm lifts to the starting position and cycle is stopped.
2.	Press emergency button **TOTAL STOP** (button 15 – control panel) in emergency causes! The safety circuit is broken and saw band drive is broken too.

3.8. Service menu

3.8.1. Entrance to service menu

```
"   MODE SELECTION   "
" Mode select. Switch"
"  is in position '0'"
"<REFER>    <SERVICE>"
```

F1 F2 F3 F4

Turn switch (16) to position „0" and press button **F4** to entrance to service menu.

3.8.2. Vice parameters

By setting the time opening of both vices you can set, distance of the movable jaw vices opening, it means, the vice is opened any more, when the time is set longer. This function is used in case of the cutting of the rough materials. Is necessary to set longer vice opening, that the material will be released. Smooth materials has set shorter vice opening. Shorten the time of the cycle. Time of the vices opening is 1 second.

```
"1 = Clamp params.   "
"2 = Cooling params. "
"3 = Cutting params. "
"      <NEXT>  <DONE>"
```

F1 F2 F3 F4

1. Press button 1 to entrance to menu: Vice parameters.

```
" CLAMP OPENING TIME"
" <-]O[-> : x.x sec  "
" <-] [-> : x.x sec  "
"       <NEXT> <MENU>"
```

F1 F2 F3 F4

2. The feeding vice (upper row) – adjust the time, press button F2.

The main vice (lower row) – adjust the time, press button F4 for returning to main menu.

3.8.3. Cooling parameters

You can adjust the cooling stopping of the saw band after cutting finishing.

```
"1 = Clamp params.   "
"2 = Cooling params. "
"3 = Cutting params. "
"       <NEXT><DONE> "
```

F1 F2 F3 F4

1. Press button **2** to entrance to menu: Cooling parameters.

2. Select, if you want to stop the cooling in semi-automatic or automatic mode, eventually in both modes.

```
"1 =In semi-automatic "
"2 =In automatic mode "
"3 =In both cases     "
"              <MENU>"
```

F1 F2 F3 **F4**

Button 1 – adjust the cooling stopping of the saw band in semi-automatic mode.

Button 2 – adjust the cooling stopping of the saw band in automatic mode.

Button 3 – adjust the cooling stopping in the both modes.

3. Select the desired mode of cooling stopping. The selected item is marked with number.

```
"1=Top pos shutoff [1]"
„2=Bot.pos shutoff [ ]"
"3=No shutoff      [ ]"
"              <MENU>"
```

F1 F2 F3 **F4**

Button 1 – stop the saw band cooling after cutting finishing in top position of the saw arm.

Button 2 – stop the saw band cooling after cutting finishing in down position of the saw arm.

Button 3 – do not stop the saw band cooling after cutting finishing.

4. Press button F4. The selected cooling type is stored and you can return to the previous menu

3.8.4. Cutting parameters

You can select, if you want to stop the saw band drive in upper or lower position of the saw arm, or do not stop the drive.

```
"1 = Clamp params    "
"2 = Cooling params  "
"3 = Cutting params  "
"       <NEXT><DONE>"
```

F1 **F2** **F3** **F4**

1. Press button 3 to entrance to menu: Cutting parameters.

2. Select, if you want to adjust the drive stopping in semi-automatic or automatic mode, eventually in both modes.

```
"1 =In semi-automatic "
"2 =In automatic mode "
"3 =In both cases     "
"              <MENU>"
```

F1 F2 F3 **F4**

Button 1 – adjust the drive stopping in **semi-automatic** mode.

Button 2 – adjust the drive stopping in **automatic** mode.

Button 3 – adjust the drive stopping in both modes.

3. Select the desired mode of the saw band stopping. The selected item is marked with number.

```
"1=Top pos shutoff [1]"
„2=Bot.pos shutoff [ ]"
"3=No shutoff      [ ]"
"              <MENU> "
```

F1 F2 F3 **F4**

Button 1 – saw band stopping in **top** position after cutting finishing.

Button 2 – saw band stopping in **down** position after cutting finishing.

Button 3 – **do not stop** the saw band after cutting finishing.

4. Press button **F4**. The selected mode of band stopping is stored you can return to the previous menu.

3.8.5. Length units selection

You can select the length units: millimetres or inches.

```
"1 = Clamp params     "
"2 = Cooling params   "
"3 = Cutting params   "
"        <NEXT> <DONE>"
```

F1 **F2** **F3** **F4**

1. Press button **F2**. Shift to the next menu.

```
"1 = Machine params   "
"2 = Language         "
"3 = Swarf conve.mode"
"<BACK> <NEXT> <DONE>"
```

F1 **F2** **F3** **F4**

2. Press button **F2** – other. Shift to the menu: Units selection.

```
"F1= mm(1) inch(0)[1]"
"                    "
"                    "
"            <MENU>  "
```

F1 F2 F3 **F4**

3. Select the length units: millimetres or inches by repeated pressing button F1.

1 = millimetres

0 = inches

4. Press button F4. The selected parameters are stored and you can return to the previous menu.

3.8.6. Service menu closing

```
"1 = Machine params. "
"2 = Language        "
"3 = Swarf conve.mode "
"<BACK> <NEXT> <DONE>"
```

F1 F2 F3 F4

Press button F4. Service menu is closed.

3.9. Band saw adjusting

3.9.1. Support roller

If set length of the cut material is larger than 380 mm, remove the support roller to avoid damaging the machine!

In case the set length of feed (see chapter Automatic cycle) is smaller than 380 mm, use the auxiliary roller to support the material.

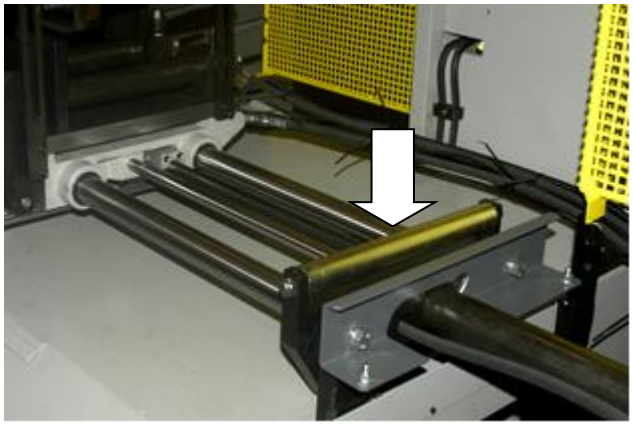

Before insertion of the material fasten the roller so that even shorter pieces cannot fall through. Lay the supportive roller on the guiding rods in such a way, that the guiding rod runs through the fastening cube of the roller. Set the distance of the support roller and tighten the fastening cube with a star screw.

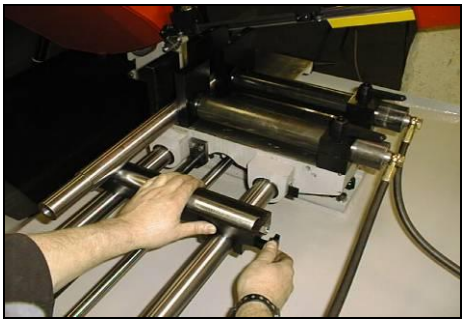

Do not try to slide the support roller if the star screw is not loosened.

3.9.2. Speed adjusting of the arm lowering

Set the speed of the arm lowering to the cut by control valve (position 16 – control panel).

Set the **lower** speed of the arm lowering to the cut by turning the switch **clockwise**.

Set the **higher** speed of the arm lowering to the cut by turning the switch **contra-clockwise**.

> *Notice:*
> ***If you keep closing the throttle valve too tightly, the valve seat may wear off which causes its leakage. Therefore, close the valve always gently.***

3.9.3. Cutting speed setting Ergonomic 290.250 GAC – without frequency converter

The speed of the saw band can be set either to 40 $m.min^{-1}$ or 80 $m.min^{-1}$. The setting is performed by a turning switch located on an electric cupboard on the drive on the saw arm (see arrow).

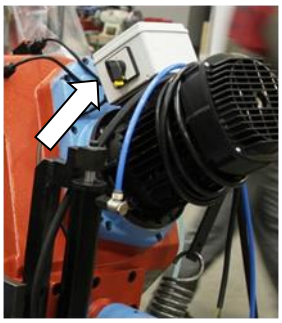

3.9.4. Cutting speed setting Ergonomic 290.250 GAC – with frequency converter

The saw band speed can be changed continuously. The setting is as follows:

1. Turn the switch **12** into position (semiautomatic cycle)
2. Set desired speed by the frequency converter knob **16**

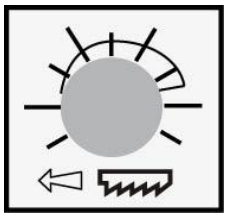

3.9.5. Angular cut setting

Band saw **Ergonomic 290.250 GAC** could make angle cuttings varied from **0°** to **+60°**. Angles **0°**, **45°** and **+60°** are set by means of the fixed stop.

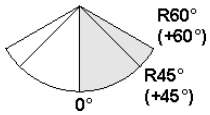

Picture	How to
	1. Lift the saw arm by pressing button "Lift the saw arm" 2. Release the securing lever.
	3. Swivel the saw arm to the desired cutting angle.
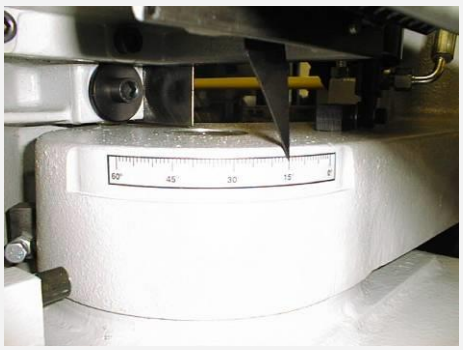	The scale is situated on the side of the turning console. 4. Check the adjustment according to the scale. 5. Tighten the securing lever again.

Angle setting to 45° and 60° using the default stops

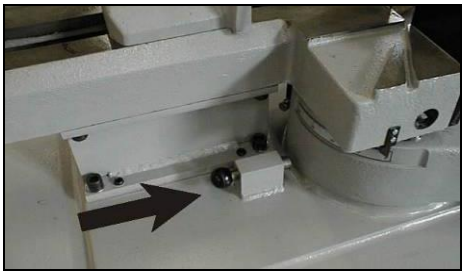

If the angle is less than 45°, the pin does not have to be pulled out. Release securing lever only and turn the frame to the desired position.

If you want to set the angle at 45° using the default stop, do not pull out the pin and turn the frame to the default stop.

3.9.6. Optimal adjusting of the guide cubes span

In order to achieve smooth and precise cuts, the band guide cube should be positioned as close as possible to the material.

1. Release the splice plate of the left stretching listel.

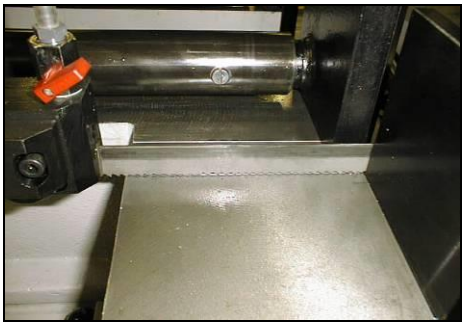

2. Move the left part of the guide so that the edge of the left guide cube is as close to the material.

> *Attention!*
> ***If the cut material is thinner than 160 mm, check the distance of the left guide cube edge from the edge of the clamping table. Guide cube must not overlay the clamping table area and has to be positioned at least 10 mm from this area. If the cube touches the table, the machine cannot finish its cycle, because the saw arm cannot reach its lowest position.***
>
> ***Make sure that the guide cube does not collide with the vice. Guide cubes should be placed ca. 40 mm from the vice jaws.***

3. Tighten the splice plate of the stretching listel.

3.9.7. Vice setting

The band saw does not have vices equipped with hydraulic cylinders with full lift, the vices have to be adjusted manually according to the diameter or width of the material to be cut.

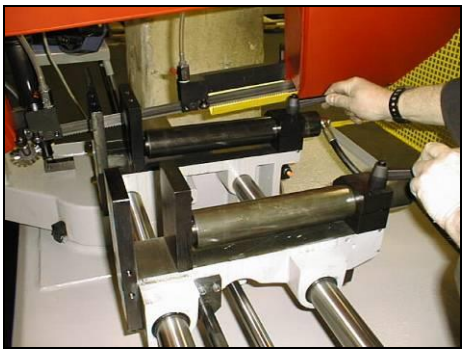

1. Loosen the fastening levers of both vices.

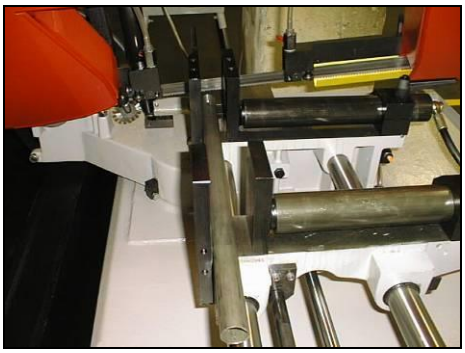

2. Open both vices to insert the cutting material.

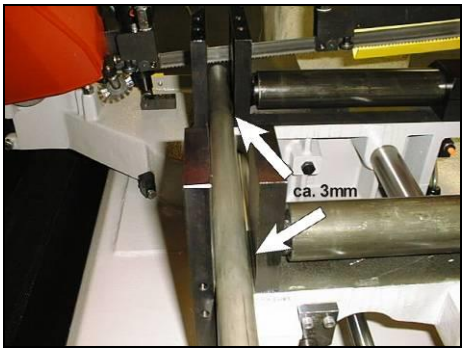

3. Adjust the vice jaws ca. 3 mm from the cutting material and tighten both clamping cubes of the vice cylinders.
4. Check that the distance between the material and the jaws match.

If the distance between the material and the jaw is too small, it may cause problems with the material feed (the friction of the jaws against material may occur).

3.9.8. Pressure adjusting to the cut

The band saw ergonomic is equipped with cutting pressure regulation on the right guiding cube.

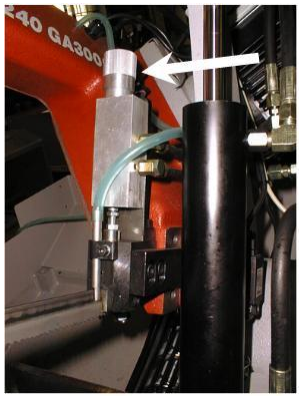

Pressure setting is performed with regulation wheel on the guiding cube.

- Screw on the wheel – downfeed pressure is bigger.
- Screw off the wheel – downfeed pressure is smaller.

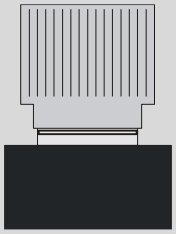	*One visible neck* • Solid material over Ø200 mm
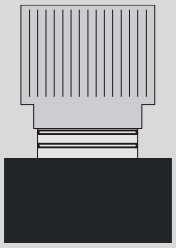	*Two visible necks* • Plný materiál do Ø80 - Ø200 mm.
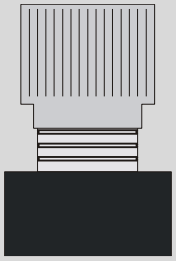	*Three visible necks* • Pipes and shaped material with surface from 10 - 15 mm • I- shaped material from 200 - 280 mm • Solid material to Ø80 mm
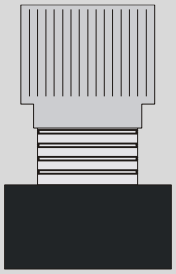	*Four visible necks* • Pipes and shapes material with surface to 10 mm • I - shaped material to 200 mm

3.9.9. Swarf conveyor operation

> *Attention!*
> ***The swarf conveyor is supplied to the band saw only by request.***

In semi-automatic cycle	• Swarf conveyor *ON* – press together F1 and 3 buttons. • Swarf conveyor *OFF* – press together F1 and E buttons.
In automatic cycle	• The swarf conveyor operation is adjusted according to chapter Service menu.

3.9.10. Upper pressure adjustment

> *Attention!*
> ***If the machine is equipped with upper pressure, bundle cutting is possible***

1. Open both vices by pressing buttons *Feeding vice opening* and button *Main vice opening*.

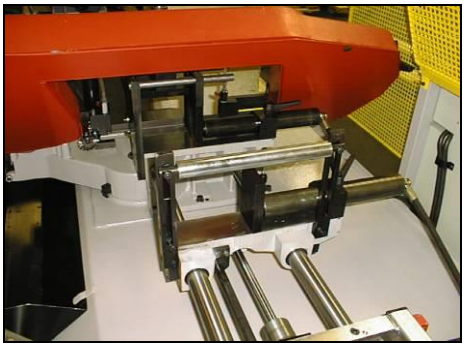

2. Release levers of the vice cubes and open the vice to the maximum bundle width.

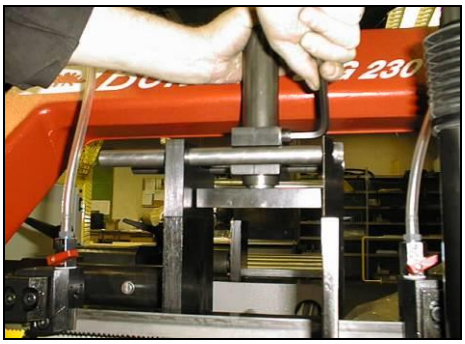

3. Release the clamping cube of the vertical clamping cylinder, pull the cylinder to the top position limit and tighten the clamping cube again.

4. Insert the first layer of the material, set the vices at a distance of 3 mm from material, and fasten the levers of gripping cubes.

5. Insert residual layers of the material. Release again the fastening cube of the vertical pushing cylinder and adjust its jaw to distance 3 mm from the material.

6. Fasten the clamping cube of the vertical cylinder.

Attention!
If the distance is too large, the machine displays „no material inserted“

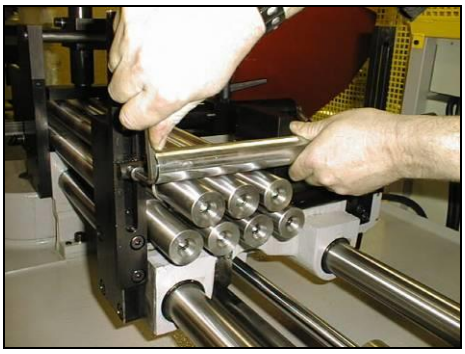

7. Release the pressure roller and adjust it to press the bundle from the upper side on the feeder vice.

   Make sure the roller is not too loose. The roller has to touch the material while moving; the material must be in contact with the roller and not move about freely.

   Make sure the roller does not have too much pressure on it.

   It is recommended to weld the layers together on the rear side during bundle cuts. Main switch must be switched off during welding.

3.10. Vkládání materiálu

- Nepohybujte se pod zdviženými břemeny
- Nevstupujte nikdy na válečkovou trať!
- Při upínání materiálu do svěráku materiál nepřidržujte ani s ním jinak nemanipulujte! Svěrák Vám může způsobit těžké zranění!

3.10.1. Volba manipulačního prostředku

- Používejte ke zvedání a přemisťování materiálu manipulační prostředky s dostatečnou nosností!
- Manipulovat s materiálem je možno pouze s vysokozdvižným vozíkem nebo použitím závěsných lan a jeřábu!
- Nepoužívejte vysokozdvižného vozíku nebo jeřábu v případě, že k tomu nemáte oprávnění!

3.10.2. Vkládání

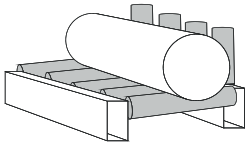

Vkládejte materiál do svěráku tak, aby se po upnutí nemohl pohnout nebo vypadnout ze svěráku. Řežete-li dlouhé kusy materiálu (např. tyče, trubky), používejte k jejich přisouvání k pásové pile válečkové tratě.

Přesvědčte se, zda je délka a šířka válečkové tratě dostatečná vzhledem k rozměrům materiálu, a zda je nosnost tratě dostatečná vzhledem k hmotnosti materiálu!

U kulatého materiálu dbejte na to, aby byl opřen minimálně o dva vertikální válečky a nemohl z válečkového dopravníku spadnout!

3.10.3. Řezání ve svazku

Pokud chcete řezat materiál ve svazku, uvádíme zde několik návrhů, jak materiál ukládat:

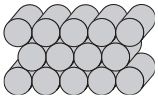

Ukládání kulatého materiálu do svazku: Dbejte speciálně u kulatého materiálu, aby tyče byly uloženy dle obrázku. Jestliže tyče uložíte jinak, může dojít k problémům při posuvu. Tyče se vůči sobě posouvají.

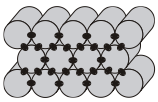

Doporučujeme materiál před řezáním ve svazku na konci svařit, aby se jednotlivé části svazku nemohli vůči sobě posouvat. Pozor! Při svařování vypněte stroj pomocí hlavního vypínače! Magnetická pole při svařování by mohla poškodit řídící systém.

4. Údržba stroje / Wartung / Machine maintenance

Manual version: 1.07 / May 2016
Manual rev.: 1

4.1. Saw band dismantling

1. Set the arm lifting stop.
2. Lift the saw arm to the top position.

3. Remove the yellow safety cover(s) of the band. The covers are tightened with screws.

4. Dismantle the back cover of the arm. It is mounted with two M6 plastic head screws.

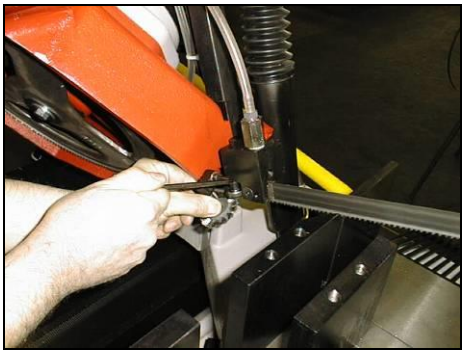

5. Loosen the holder of the brush and turn it away from the band so it does not hinder the dismantling of the band. It is fitted with one M6 hex bolt.

6. By turning the tightening star to the left loosen the stretching of the band.
7. Pull the saw band from the wheels.

8. After that pull out the band carefully from the guiding cubes.

4.2. Saw band installation

1. Prior to installation, clean the track wheels, guiding cubes and inner side of the arm thoroughly of all traces of chips and dirt. *Keep in mind the teeth direction when installing the saw band*.

2. Insert a new saw band in the guide cubes. Make sure the saw band runs between both guiding rollers and that it is pushed all the way to the top.

3. Put the saw band on both guiding wheels. Make sure that the saw band ridge fits tightly to the wheel rim. Push the saw band as close to the rim as possible.

4. Turn the tightening star to the right until you gently stretch the band.
5. Now you can remove the plastic cover on the saw band.
6. Mount the back cover.
7. Adjust the brush to the saw band and tighten its holder screws to the saw arm.
8. Mount the safety cover on the guiding lath ogf the band too.

4.3. Saw band stretching and inspection

Correct saw band stretching is one of the most important factors, which influences accuracy and saw band lifespan. Stretch the saw bands according to the band saw and the selected saw band type. Keep to the recommendation of your manufacturer.

Pilový pás Sägeband Saw band	Napětí pilového pásu Sägebandspannung Blade tension	Napětí pilového pásu PSI (pro Tenzomat) Sägebandspannung PSI (für Tenzomat) Blade tension PSI (for Tenzomat)
20 x 0,9 mm	160 $N.mm^{-2}$	23 500
27 x 0,9 mm	180 $N.mm^{-2}$	26 500
34 x 1,1 mm	210 $N.mm^{-2}$	30 500
41 x 1,3 mm	240 $N.mm^{-2}$	35 000
54 x 1,3 mm	240 $N.mm^{-2}$	35 000
54 x 1,6 mm	280 $N.mm^{-2}$	40 600
67 x 1,6 mm	290 $N.mm^{-2}$	42 000
80 x 1,6 mm	300 $N.mm^{-2}$	43 500

4.3.1. Saw band stretching

1. After installation of the saw band stretch it gently, so it does not fall of the wheels.

2. Mount the Tenzomat on the saw band and secure it with screws.

3. Stretch the saw band until it is stretched to the recommended value.

4.3.2. Saw band run inspection

If the band does not run correctly, following problems can appear:

- The band falls down from the wheels – the band or the protective cover of the band can be damaged.
- The band runs on the rim of the stretching wheel – the band or the rim of the wheel can be damaged.

Control procedure

1. Switch on briefly the saw band drive and then switch it off
2. Disconnect the saw from the electrical network.
3. Open cover of the wheels.

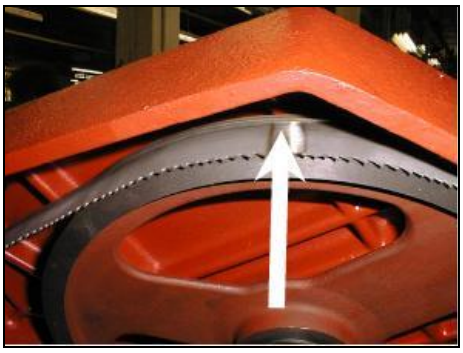

4. Check the position of the saw band on the both wheels.

- If the distance between backside of the saw band and the wheel rim is 1 mm, the setting is right.
- If the distance is bigger than 1 mm, or the saw band runs on the rim of the wheel, adjust the saw band.

5. Close cover of the saw band.

4.4. Adjustment

4.4.1. Saw band run adjustment

The saw band run is set with screw in the stretching cube on the saw frame. Optimal distance has been determined at 1mm.

- Turn the screw to the right, the saw band closes to the stretching wheel rim
- Turn by screw to the left, the saw band departs from the stretching wheel rim

After setting check the saw band run again.

4.4.2. Hard metal guides adjustment

Hard metal guides adjustment is one of the most important criterions which influence cutting accuracy and saw band lifespan. Therefore it is essential to check that the adjustment of the hard metal guides is correct.

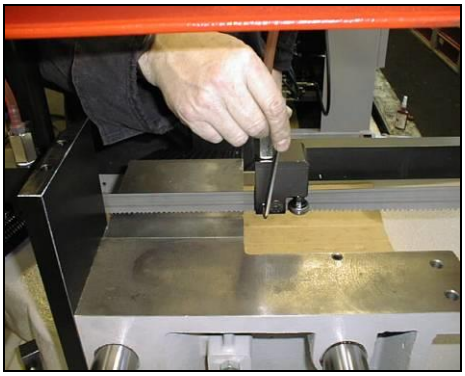

6. Tighten the positioning screw on the back side of guide cube so that the band cannot move.

7. Loosen the positioning screw slowly and at the same time check the clamping of the band. As soon as the band can be moved without resistance the hard metal guides are set correctly.

8. Make sure that the hard metal guides do not put up to much resistance against the movement of the band otherwise the lifetime of the saw band and drive will be decreased.

4.4.3. Setting of the guiding cubes

Cutting quality and saw band lifespan is also dependent on the guiding cubes adjustment. Therefore this adjustment has to be checked periodically.

1. Loosen both mounting screws on the guiding cube and push it carefully to the upper blunt edge of the band.

   Make sure the saw does not bend; otherwise the cube will press against the band and damage it.

2. Fasten both tightening screws again.

Notice:

If the guide cube is correctly adjusted, the upper edge of the cube and the ruler are parallel.

4.4.4. Setting of angular stops

The setting of angular stops is to be checked periodically to avoid inaccurate slanting cuts.

There are two fixed stop with adjustable screws on the turning console of the machine (45°, 60°).

If you position the saw arm at a stop and measured angle does not precisely match the corresponding value, the block of the stop has to be adjusted.

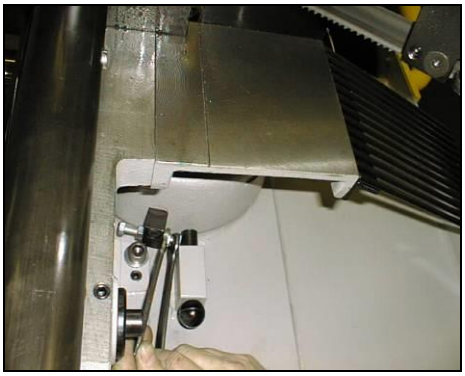

1. Loosen the locking nu of the adjustable bolt..

2. Screw the adjustable nut in or out.

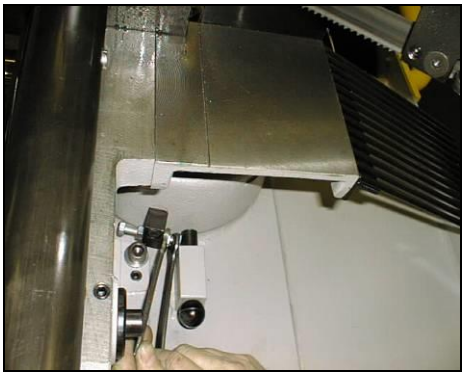

3. After setting the adjustable bolt tighten the locking nut again.

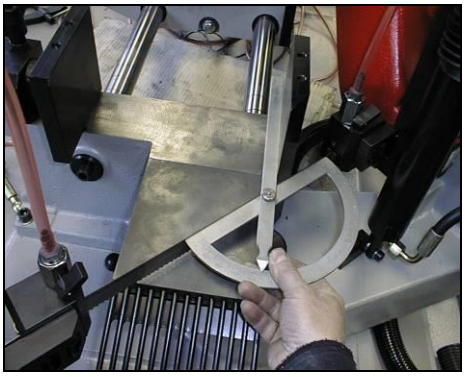

4. Check the angle setting with a protractor.

4.4.5. Adjusting the limit switch of the saw band stretching

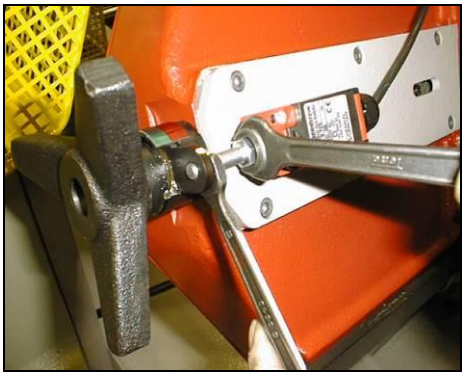

After the saw band is replaced, the limit switch setting must be checked. If the limit switch is not set correctly, the band is stretched either too much or too little.

1. Stretch the band with help of the TENZOMAT to an optimal value.
2. Release the nut on the stop screw.
3. Start the band drive. Two scenarios may occur:
   - If the engine is switched on, but it does not run, turn the screw to the left until the engine starts to run
   - If the engine runs turn the screw to the right until it stops, then turn the screw shortly to the left until the engine starts running again
4. Fasten the stop screw with the nut and check the setting of the switch again.

4.4.6. Saw frame lower position stop adjustment

The lower stop limits the lowest position of the saw frame. This stop has to be checked at least once a month. If the lower stop is adjusted incorrectly, the loading surface of the table can be cut too deeply or the material will not be cut through completely.

1. Raise the saw frame to the upper position, so the adjustment screw can be manipulated with.
2. Release the nut of the adjusting screw.
3. Adjust the stop using the screw.
4. Fasten the adjusting screw with the nut again.
5. Set the limit switch of the lower arm position.

4.4.7. Adjustment of the limit switch of saw frame lower stop

If you have adjusted the lower stop of the saw frame, the limit switch adjustment inspection is required

Setting check

Lower the arm to the lowest position. If the arm is lying on the lower stop and the switch reacts, the setting is correct. In other case carry out the switch setting

Switch setting

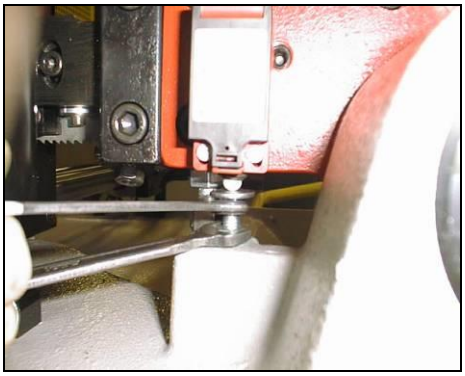

1. Release the nut of the stop screw and screw in the stop screw.
2. Lower the arm to the lower stop and turn on the band drive.
3. Screw out the stop screw until the band drive stops.
4. Secure the screw with nut again and check the limit switch setting once more.

4.4.8. Setting of the feeder back position induction switch

If the feeder back position induction switch is not set correctly it can come to wrong function execution during the operation of the machine.

Therefore the setting of the induction switch is to be checked regularly.

The induction switch is screwed in a holder and tightened with two nuts. The holder is fastened to the lower side of the feeder cylinder.

1. Move the driver to the furthermost position.
2. Unfasten the nuts on the induction switch and move the induction switch closer to the driver until a signal diode on the induction switch lights up (minimum distance of 0,5 mm)
3. Fasten the tightening nut carefully.
4. Check the setting of the switch by repeated movement of the driver.

4.4.9. Setting of the feeder front position induction switch

If the feeder front position induction switch is not set correctly it can come to wrong task execution during the operation of the machine.

Therefore the setting of the induction switch is to be checked regularly.

1. Move the driver to the utmost front position.
2. Unfasten the nuts on the induction switch and move the induction switch closer to the driver until a signal diode on the induction switch lights up.
3. Fasten the tightening nut carefully.
4. Check the setting of the switch by repeated movement of the driver.

4.4.10. Pressure switch adjustment

Take extra precaution when working on hydraulic system! There is still residual pressure in the hydraulic system after it has been shut down!

The pressure switches for vice and feeder are located in the block of the hydraulic aggregate.

For setting the pressure switch of the vice (marked with yellow band SQ xx) or setting the pressure switch of the feeder (yellow band SQ 1) following steps are necessary:

1. Take off the rubber cover of the pressure switch (carefully – outlets must not be broken).
2. Set the sensitivity of the pressure switch by means of a small screwdriver.
3. Turn the screwdriver to the left to increase the sensitivity of the switch.
   Turn screwdriver to the right to let the switch activate at a higher pressure.

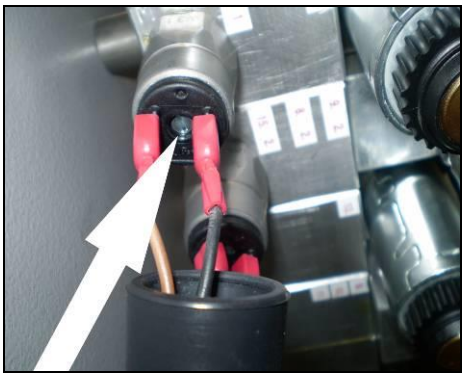

Check limit switches adjustment.

- The vice is clamped – The signaling diode is lighted
- The vice is opened – The signaling diode in not lighted
- The vice is moving – The signaling diode is neither lighted nor blinking
  - After adjusting the pressure switch put the rubber cover back into place

4.4.11. System pressure adjustment

- Take off the black cover of the pressure valve.
- Release the nut of the pressure valve.

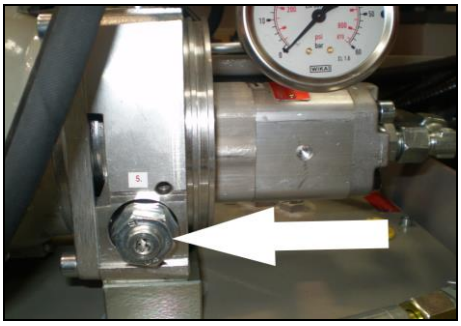

- Turn the pressure valve clockwise to increase the pressure.
- Turn the pressure valve anticlockwise to decrease the pressure.

Set the pressure by means of the pressure valve and check it on manometer. After adjusting the pressure tighten the nut again.

4.4.12. Adjustment of the feeder cylinder step setting securing cube

The locking lever is set correctly by the manufacturer but if the cylinder is not secured an adjustment of the clamping cube is necessary.

Check the functionality of the cube regularly, if the cylinder is not tightened correctly the feed will operate inaccurately.

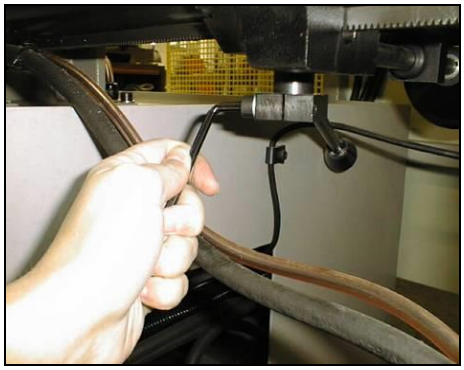

1. Loosen the tightening screw of the locking lever until the lever can move freely.

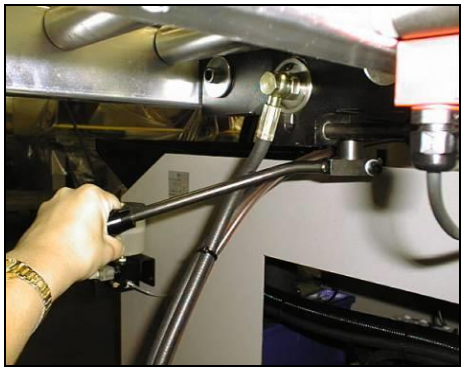

2. Turn the lever to the left as far as possible and tighten the tightening bolt again.

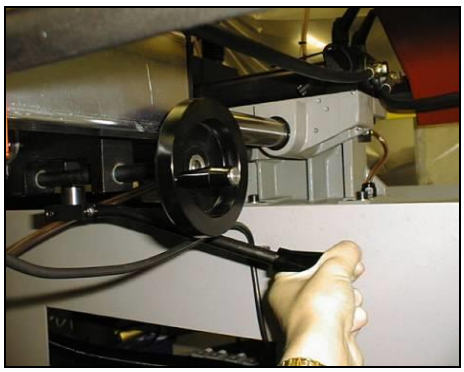

3. Secure the cube with the lever and carry out a control.

4.4.13. Setting of the throttle valve

1. Turn off the main switch of the machine. Let the saw arm sink to the lower position. Close the throttle valve gently.

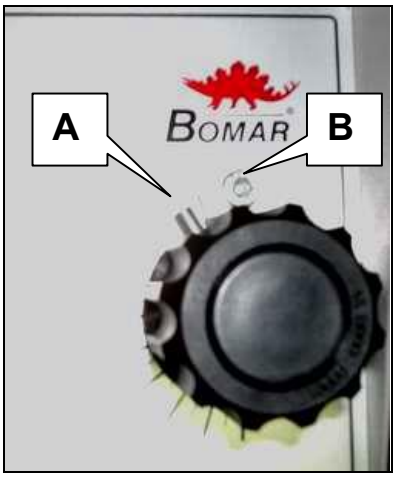

2. The grub screw (pos. A) must be near the stop screw (pos .B) when the valve is completely closed.

3. In the opposite case loosen the grub screw with a hex key and adjust the knob accordingly. Tighten the grub screw again.

4. Turn on the machine and check the function of the throttle valve.

4.4.14. Brush adjustment

Adjustment of the brush has essential influence on cutting performance, saw band lifespan, lifespan of the wheels and hard metal guides and cutting accuracy. Therefore the brush has to be checked every shift.

1. Loosen the mounting screws of the brush until the brush can be adjusted.

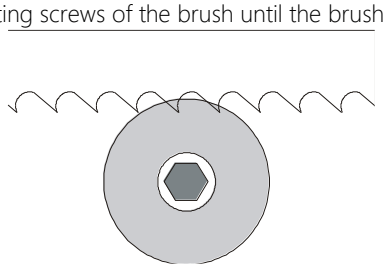

2. Adjust the brush to the saw band. The brush must touch the teeth of the saw band.

3. Tighten the mounting screws.

4.4.15. Setting of the turning lever securing cube

1. The securing cube is set correctly by the manufacturer but after multiple adjustments of cutting angle the cube has to be corrected. Check the functionality of the securing cube regularly, if the console is not tightened properly, it will come to inaccuracies during cutting.

1. Loosen the securing screw of the lever until the lever can be moved with freely.

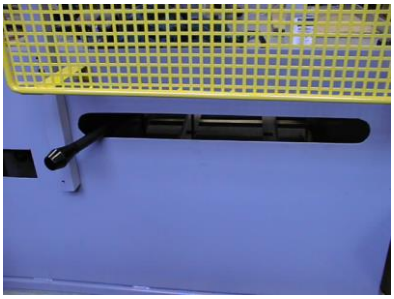

2. Turn the lever to the left until it reaches the stop and tighten again firmly the securing screw.
3. Secure the console with the lever and check it.

4. If the setting is done correctly, the arm cannot be turned with and the locking lever is not touching the right side of the slit in the base.

4.5. Cooling agents and chip disposal

4.5.1. Coolant inspection

The state of the cooling agent has a significant influence on cutting quality and lifespan of the machine. Lifetime of the cooling liquid is 1 year, after that we recommend to change the cooling liquid. This time is dependent on the degree of pollution of the cooling liquid (especially with extraneous oils) and on other factors.

The quality of the cooling agent will deteriorate due to:	If the solution is too weak:	If the solution is too strong:
• use of contaminated water • oil contamination from the outside (hydraulics, gears) • high operating temperatures • lack of air circulation • wrong concentration	• corrosion protection is diminished • lubrication decreases • microbial attack is more likely	• the cooling ability is decreased • foam production increases • emulsions stability deteriorates • sticky residue develops

The coolant tank can be found in the base of the saw.

Check level of the cooling liquid and function of the pump periodically!

> *Note:*
> ***If the state of the cooling liquid is not satisfactory and can't be improved, the cooling liquid must be replaced.***

Check the state of the cooling agent accordingly to following table:

Testing	Interval	Method	Condition	Precaution
Liquid level	daily	visually	too low	check concentration, add water or emulsion
Concentration	daily	refractometer densimeter	too high too low	refill water refill base emulsion
Smell	daily	by senses	unpleasant smell	good ventilation, add biocides or replace coolant
Contamination	daily	by senses	visible oil leaks, sludge, fungi	surface cleaning, fix leaks, add biocides or fungicides; clean the system with a cleanser* prior to the coolant replacement

Corrosion-protection	when necessary	visually chip test Herbert-test	insufficient corrosion protection	test stability, if necessary – increase concentration or pH value
Stability	when necessary	refractometer	oiling	add concentrate, enquire the supplier
Foam reaction	when necessary	shaking test	too much foam, foam disperses too slowly	avoid aeration, increase water hardness, fix with defoamer

* According to manufacturer's instructions

4.5.2. Chips disposal

Chips resulting from cutting operations must be disposed of in accordance with the relevant regulations.

- Let the chips drip excess fluid!
- Put the chips into a watertight container. Make sure that the container does not leak, because even after a long dripping time, the chips still contain coolant residues.
- *Place the container into the care of a disposal company equipped for the disposal of chips contaminated with cooling liquid.* In case the machine is equipped with micronisation device, the chips must also be handed over to a disposal company.

4.6. Gearbox oils and greases

4.6.1. Gearbox oils

In gearboxes, oil is used for the whole lifetime of the gearbox.

Use oils with DIN 51517 specification for the gearboxes. Select the ISO VG viscosity class according to the original oil.

Attention:
When replacing the oil, use oils recommended by BOMAR or oils from other manufacturers, which have comparable parameters.
Do not forget, that mineral and synthetic oils must not be mixed!

Recommended oils and quantity according to the type of the band saw

Band saw	Gearbox oil	Capacity
Ergonomic 290.250 GAC	Paramo PP7	2,0 l
Swarf conveyor	Shell Tivela S 320	0,075 l

Comparative table of gearbox oils

Manufacturer	Viscosity grade		
	ISO VG 100	ISO VG 220	ISO VG 320
BP	Energol GR-XP 100	Energol GR-XP 220	Energol GR-XP 320
Castrol	Alpha SP 100 Alpha MW 100	Alpha SP 220 Alpha MW 220	
Elf	Reductelf SP 100	Reductelf SP 220 Reductelf Synthese 220	Reductelf SP 320
Esso	Spartan EP 100	Spartan EP 220	Spartan EP 320
Mobil	Mobilgear 627	Mobilgear SHC 220 Mobilgear 630	Mobilgear 632
ÖMV		PG 220	
Paramo	PP 7	Paramo CLP 220	Paramo CLP 320
Shell	Shell Omala 100	Shell Omala 220 Shell Tivela S 220	Shell Omala 320 Shell Tivela S 320
Total	Carter EP 100	Carter EP 220	Carter EP 320

4.6.2. Lubrication greases

For lubrication we recommend using lithium based class NGLI-2 saponified grease. Different greases are mixable, if their oil bases and density classes are identical.

Comparative table of the lubricant greases:

Manufacturer	Type of the lubricant grease
BP	Energrease LS - EP
DEA	Paragon EP1
Esso	FETT EGL 3144
	Beacon EP 1
	Beacon EP 2
FINA	FINA LICAL M12
Klüber	Microlube GB0
	Staburags NBU8EP
	Isoflex Spezial
Optimol	Optimol Longtime PD 0, PD1, PD2
Shell Aseol AG	ASEOL Litea EP 806-077
Texaco	Multifak EP1

4.6.3. Lubrication

There are several spots on the machine, which are necessary to be greased periodically to secure a correct function of the machine.

Upper pin of the lifting cylinder –drip oil 1x a week.

4.6.4. Hydraulic oils

We recommend replacing the hydraulic oil once every 2 years, because the oil properties can deteriorate and may not meet the requirements of the hydraulic unit. If the hydraulic system is equipped with a filter (2SF 56/48-0,063), replace the filter as well.

Use oils with DIN 51524-HLP, ISO 6743-4 specification and viscosity class ISO VG 32 for hydraulic aggregates.

Note:
When replacing the oil, use oils recommended by BOMAR or oils from other manufacturers which have comparable parameters. Do not forget, that mineral and synthetic oils must not be mixed!

Comparative table of hydraulic oils:

Manufacturer	Type	Manufacturer	Type
Agip	Oso 32	Ina	Hidraol 32 HD
Aral	Vitam GF 32	Klüber	Lamora HLP 32
Avia	Avilub RSL 32	Maďarsko	Hidrokomol P 32
Benzina	OH-HM 32	Mobil	Mobil DTE 25
BP	Energol HLP 32	ÖMV	HLP 32
Bulharsko	MX-M/32	Polsko	Hydrol 30
Castrol	Hyspin AWS 32	Rumunsko	H 32 EP
Čepro	Mogul HM 32	Rusko	IGP 30
DEA	Astron HLP 32	Shell	Tellus Oil 32
Elf	Elfolna 32	Sun	Sunvis 846 WR
Esso	Nuto H 32	Texaco	Rando HD B 32
Fam	HD 5040	Valvoline	Ultramax AW 32
Fina	Hydran 32		

4.6.5. Inspection of the hydraulic oil state

Check the state of the hydraulic oil. The oil level must be in the middle of both watermarks.

If needed, add hydraulic oil. Always use a filter (10 μm or finer) when pouring the hydraulic oil into the unit to avoid contaminating the hydraulic system with impurities, which can cause malfunctions.

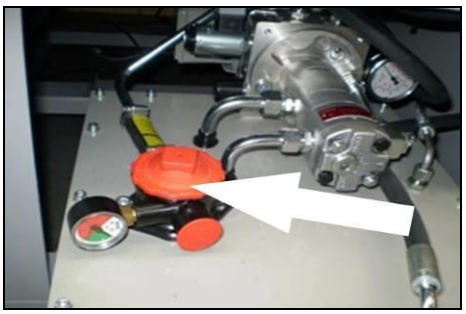

4.7. Machine cleaning

Clean the machine off cooling agent and impurities after every shift. Conserve the guiding surfaces, mainly:

- Guiding of the clamping jaws of the main and feeding vice.
- Guiding of the feeder.
- The loading surface of the main and feeder vices and the area below them.
- Threaded rod of the main and feeding vice.

4.8. Worn pieces replacement

4.8.1. Hard metal guides replacement

If the hard metal guides cannot be adjusted, they have to be replaced.

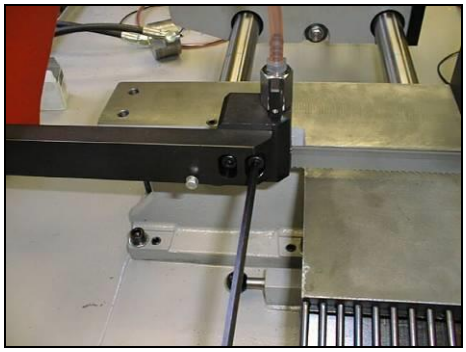

1. Remove the cooling agent hosepipe and dismantle the saw band and saw band guiding cube.

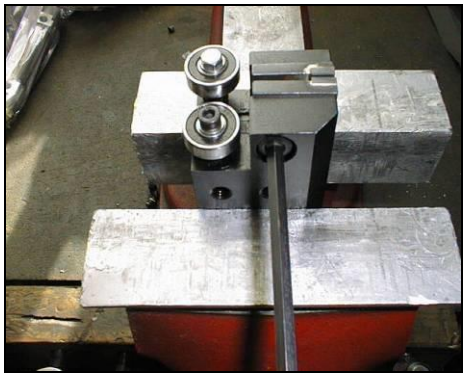

2. Fasten the guiding cube in a vice and screw out the fastening screws of both hard metal plates.

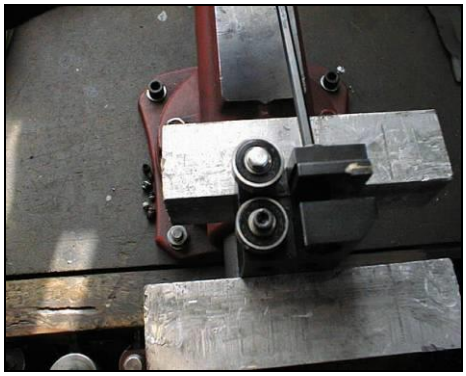

3. Screw out the adjustment screw of the adjustable guiding plate out of the cube, until it cannot be seen from the inside.
4. Insert new hard metal guides, screw the tightly and mount the guiding cube to the guiding lath.
5. Mount the saw band, set the hard metal guides and guiding cube.

4.8.2. Worn brush replacement

If the chip removing brush is so worn, that it does not fulfill its function, it must be replaced.

1. Release the nut on the brush, exchange the worn brush for a new one and screw in the nut.

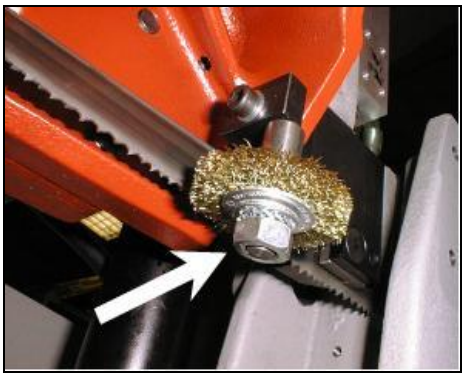

2. Adjust the brush to the saw band.

4.8.3. Saw band guiding rollers replacement

If the saw band is not sufficiently guided by guiding rollers and/or if the rollers are visibly worn, they should be replaced.

Attention! Guiding rollers must be replaced together on both guide cubes!

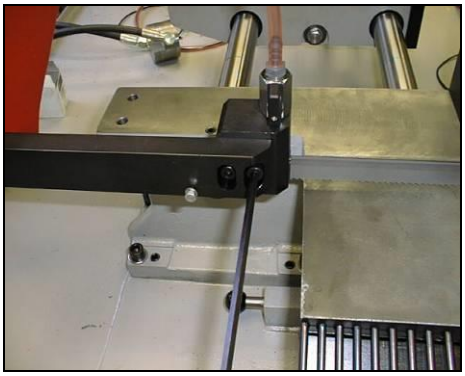

1. Remove the cooling agent hosepipe and dismantle the saw band and guiding cube.

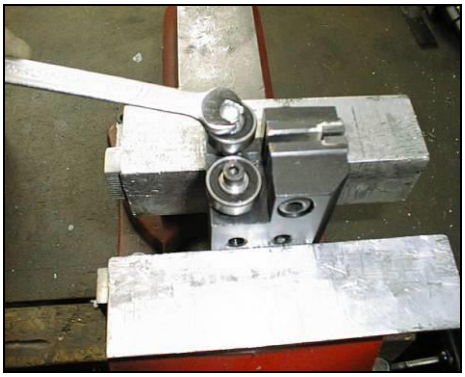

2. Grip the guide cube in a vice and screw out both fastening screws of the eccentrics.

3. Pull both guiding rollers from the eccentrics.

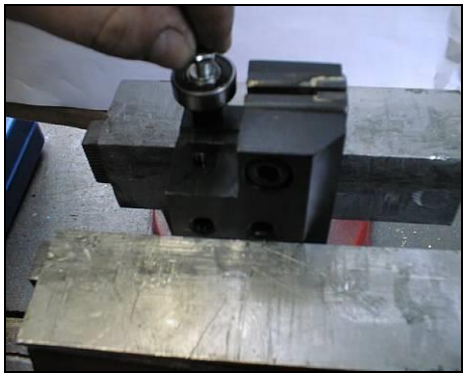

4. Put new guiding rollers on the eccentrics and mount the eccentrics to the guide cube.

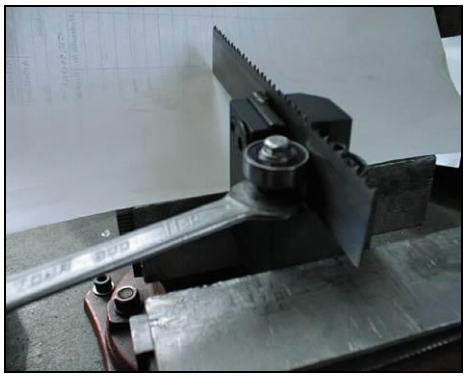

5. Now insert a test piece of saw band (cca 15 - 20 cm) into the guide cube. Adjust both eccentrics so that the band runs in the middle of the milled groove. The groove is located between both eccentrics. Guide rollers must not press too much against the band but must be able to spin freely. Optimal distance between the band and guiding roller is 0,05 mm.

6. Install the cube on the guiding lath. Install the saw band and adjust the guiding cubes.

4.8.4. Stretching wheel replacement

1. Dismantle the saw band.

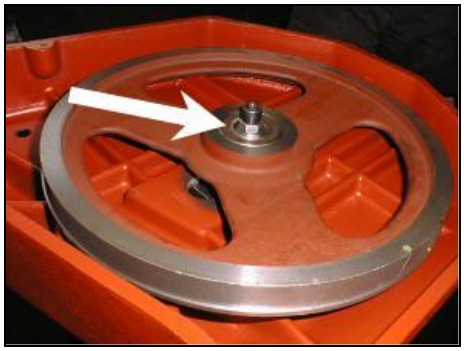

2. Screw off the stretching wheel fastening screw and remove the washer.
3. Screw the auxiliary screw onto the shaft of the stretching wheel.

4. Install a three-legged puller on the stretching wheel and pull the wheel carefully off the shaft.

5. If the lower bearing stays on the shaft, pull it off the shaft with a two-legged puller. Check both bearings; eventually replace them with new ones.

6. Insert a retaining ring into the opening of a new stretching wheel.

7. Insert a bearing into the hole in the wheel and push it to the retaining ring.

8. Clean the shaft and grease it. Install the new stretching wheel on the shaft.

9. Install a distance ring on the shaft and push it to the lower bearing.

10. Install a second bearing on the shaft and push it to the distance ring.

11. Insert a washer and fasten the stretching wheel firmly with a bolt.
12. Install the saw band. Wheel replacement is done.

4.8.5. Driving wheel replacement

1. Dismantle the saw band.

2. Screw out the fastening bolt of the driving wheel and pull off the washer.
3. Screw an auxiliary screw into the driving shaft.

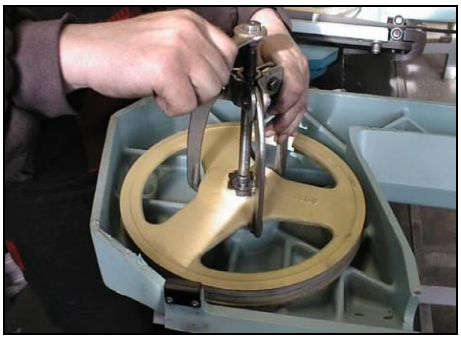

4. Install a three-legged puller on the driving wheel and pull it carefully off the shaft.

5. Check, whether the spring and the driving shaft are damaged. Contact your supplier for parts replacement.

6. If the shaft and the spring are sound, clean them, grease them and install them on the driving shaft.

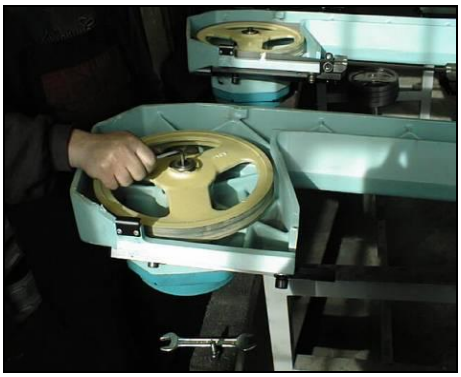

7. Insert a washer and fasten the driving wheel firmly with a bolt.
8. Install the saw band.

4.8.6. Cooling pump replacement

Only a qualified worker can carry out the connection! High-voltage accident may have fatal consequences.

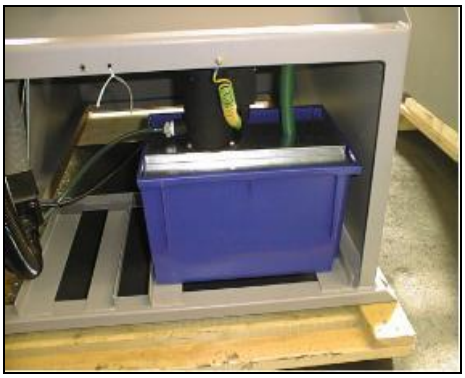

1. Pull out the cooling agent tank from the machine base as far as possible.

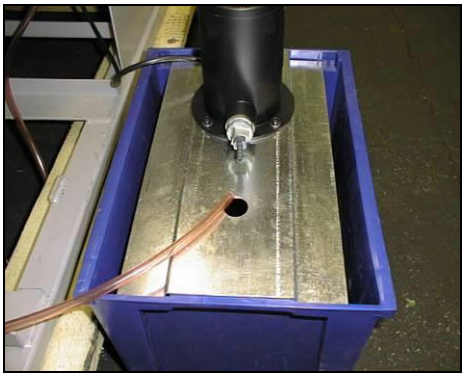

2. Remove the hosepipe leading the cooling agent from the connection on the pump and unscrew the connection from the cooling pump. Unscrew the four screws on the cooling pump flange and pull out the pump from the metal sheet holder.

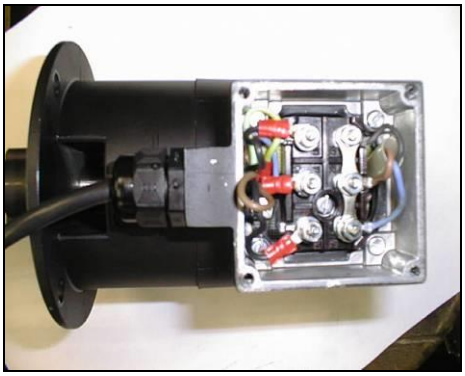

3. Remove the cover of the pump terminal switchboard. Disconnect the 4 terminal connectors of the input cables. Input cables are identified by red clamps.

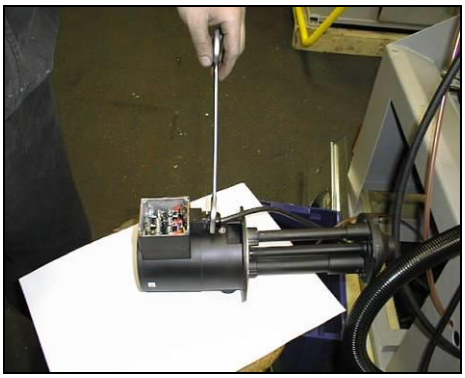

4. Loosen the cable bushing and pull the cable out from the pump.

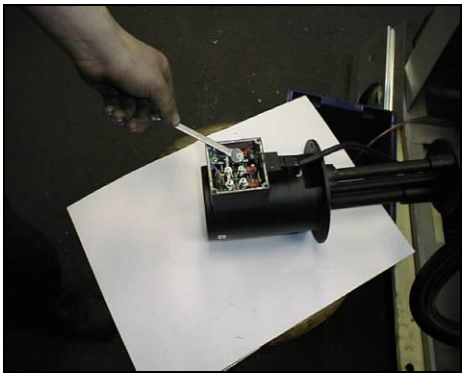

5. Dismantle the new pump's switchboard cover. Pull the cable through the bushing and connect it to the terminals.

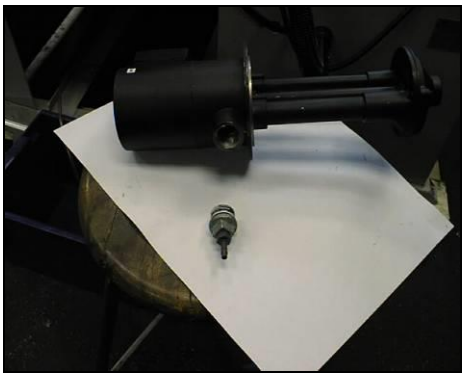

6. Screw in the bushing of the cable and the cover of the terminals. Mind the correct sealing! Seal the coolant hose connection with a teflon band and screw it in again. Plug in the coolant hose, mount the pump on the metal sheet holder and fix it with screws.

5. Závady / Störungen / Troubleshooting

Manual version: 1.07 / May 2016
Manual rev.: 1

5.1. Mechanical malfunctions

Problem	Possible causes	Repair
1. Slanting cut	Wrongly adjusted hard metal guides	Set according to the chapter „Machine maintenance“
	Worn hard metal guides	Replace according to the chapter „Worn pieces replacement“
	Wrongly adjusted cubes of the saw band guiding	Set according to the chapter „Machine maintenance“
	Worn bearings of the saw band guiding	Replace according to the chapter „Worn pieces replacement“
	Wrongly adjusted swarf brush	Set according to the chapter „Machine maintenance“
	Worn swarf brush	Replace according to the chapter „Worn pieces replacement“
	Insufficient saw band stretching	Increase the saw band stretching and set the limit switch
	Wrongly chosen tooth system of the saw band	Replace the saw band; follow the instructions of the manufacturer for new saw band choice
	Worn saw band	Replace the saw band
	Wrongly leveled roller conveyor	Adjust the roller conveyor
	Dirty feeding board	Cleanse the feeding board from debris, chip and residue material
	Guiding rail and guiding cube are loosened	Tighten the guiding rail
	Guiding rail and cube are too far from the material	Set the guiding cube to the material
	Too fast rate of movement into the cut	Lower the material speed of descent of the arm
	Unexpected oscillation in material quality	Adjust the cutting parameters and feeding speed according to the material
2. The cut is not cut upon desired angle	Securing lever is loosened	Check the securing lever efficiency and carry out its adjustment according to chapter

Problem	Possible causes	Repair
		„Machine maintenance“
	Set angle does not match the cutting angle	Check the angle adjustment with a protractor and if need be adjust it according to chapter „Machine maintenance“
	Insufficient saw band stretching	Stretch the saw band and set the limit switch according to chapter „Machine maintenance“
	Guiding cube holder and guiding cube are loosened	Fasten the guiding holder and the cube
	Dirt between material and clamping jaw	Cleanse the material and mating jaw
3. Short lifetime of the saw band	Insufficient saw band stretching	Increase the tightening of the saw band and set the sensor of saw band tightening according to chapter „Machine maintenance“
	Worn swarf brush	Check the swarf brush condition and replace it in case of excessive wear as described in chapter „Worn pieces replacement“
	Wrongly adjusted swarf brush	Check swarf brush adjustment, set it according to chapter „Machine maintenance“
	Overly stretched saw band	Lower the stretching of the saw band and set the limit switch of the saw band stretching according to chapter „Machine maintenance“
	Wrongly adjusted hard metal guides	Check the adjustment of the hard metal guides and carry out adjustment as described in chapter „Machine maintenance“
	Worn hard metal guides of the saw band	Check the condition of the hard metal guides and if they are too worn, replace hard metal guides according to chapter „Worn pieces replacement“
	Worn saw band guide bearings	Check the guiding bearings and if you notice any excessive damage, replace them according to chapter „Worn pieces

Problem	Possible causes	Repair
		replacement"
	Wrongly adjusted guiding cubes of the saw band	Set the guiding cube according to chapter „Machine maintenance"
	Wrongly adjusted speed of descent of the arm and saw band speed	Adjust the descending speed and speed of the saw band according to values published by the saw band manufacturer
	Different material quality	Adjust the speed of descent and speed of the saw band according to desired material (perform a test cut)
	Low quality saw band	Replace the saw band (contact your local accessory supplier for more information)
	Wrongly chosen saw band tooth system	Replace the saw band, keep to the instructions of the manufacturer
	Wrongly adjusted run of the saw band	Check the space between the top of the saw band and driving wheel Adjust the tracking as described in chapter „Machine maintenance" if need be
4. Insufficient cut output	Worn saw band	Replace the saw band, keep to the instructions of the manufacturer
	Wrong saw band tooth system	Replace the saw band, keep to the instructions of the manufacturer
	Wrongly adjusted speed of descent of the arm and saw band speed	Adjust the descending speed and speed of the saw band according to values published by the saw band manufacturer
5. The cut is not finished	Wrongly adjusted lower stop of the saw frame	Check the stop setting and adjust it
	Stop surface is messy	Cleanse the stop surface of the limit switch of debris and residue material
6. Regulation valve cannot be turned	Metal chips between the valve and the panel	Chips must be removed, then put an O Ring ø 10x2 mm onto the throttle valve shaft

Problem	Possible causes	Repair
	There are metal chips inside the valve	Valve must be cleaned or changed
7. Saw band drive cannot be started	Pressure switch is wrongly adjusted	Set the pressure switch according to chapter „Machine maintenance“
	Pressure switch is defective	Replace defective parts of the pressure switch
8. Saw bands tend to rupture	Wrongly adjusted band guiding (hard metal and bearings)	Hard metal pieces and bearings must be adjusted according to „Machine maintenance“
	Bearings of guiding cubes are worn out (rolling elements are damaged or outside ring of bearing has conical form)	Bearings of guiding cubes must be replaced Bearings must be adjusted according to operating instructions
	Wrong adjusted geometry of the stretching wheel	Adjust the distance of the saw band to approx. 2 mm according to the operating instructions
	Looseness in the lifting cylinder mounting	
	Worn out pin of the upper or bottom holder of the lifting cylinder	Exchange the upper or bottom holder of the lifting cylinder
9. Damage tooth system of the saw band	Geometry of hard metal guiding cubes is wrongly adjusted	Hard metal guiding cubes must be adjusted
	Bearings of guiding cubes are worn out	Bearings of guiding cubes must be replaced
10. The saw is undercutting	Grooving on the driving wheel is worn out	Driving wheel must be replaced
11. Cleansing of the saw band is not functional	Elastic wheel of the brush drive is worn out	Elastic wheel of the brush must be replaced
	The shaft of the brush drive is rusted	The shaft of the brush must be cleaned and oiled
	The brush position and the brush cover is adjusted incorrectly – the cover prevents the brush from turning	The brush cover must be repositioned, in order for the brush to be able to turn
12. The saw arm periodically rises and descends a few millimeters during the cut; this shortens	Backslash in driving wheel mounting on the shaft	Replace following parts: the driving shaft for a longer one, bearings, distance ring, driving wheel, spring, two covers on the forehead of the shaft +

Problem	Possible causes	Repair
the lifetime of the saw band considerably		screws
	Worn channel for spring	

5.2. Electrical malfunctions

Problem	Possible causes	Repair
1. Machine is not possible to start	No voltage in the socket	Line voltage must be checked
	Overload relay is defective (thermal protection)	Each FA overload relay's condition (on/off) must be checked
	Limit switch of either saw band stretching, band cover or saw arm is not closed	Check the saw band stretching and covers
2. When the cut is finished, the frame is not raised	Bottom limit switch is adjusted wrongly	Bottom limit switch must be adjusted according to chapter ADJUSTING
	A malfunction in the hydraulic (pneumatic) system The HYTOS (BOSCH) magnetic valve is not working	Function of magnetic valve must be checked, valve must be switched on, and voltage across its terminals and coil must be checked
3. Electric motor and pump are without voltage There is no voltage between the contactor and thermal protection	Wrong contactor	Replace the contactor of the engine
4. The speed indicator of the saw band is not functional	Sensor of speed is not adjusted	Sensor of speed must be adjusted
	Defective display	The display must be replaced
	Defective sensor – diode of indicator speed does not light	Sensor must be changed and adjusted
5. Occasional switching off of the hydraulic aggregate MA3 engine protection	Too big working pressure in the hydraulic system	Service engineer must reduce the pressure in hydraulic system
6. Hydraulic aggregate is switched on but the saw arm or the main vice can't be moved	Wrong connection of electrical supply The electrical phases are connected conversely	The phases must be switched Only service engineer is allowed to do this
7. Cooling is not active	Lack of cooling agent	Refill the tank with cooling agent
	Thermal relay is defective	Replace the thermal relay
	Input hosepipe is broken or clogged	Check the cooling circuit and eventually cleanse the cooling

Problem	Possible causes	Repair
		system
	Cooling pump protection is defective	Check the protection of the cooling pump and change it if need be
	Cooling pump is defective	Replace the cooling pump

5.3. Hydraulic malfunctions

Problem	Possible causes	Repair
1. Hydro generator is not supplying oil	Reversed rotation	Check the correct connection of each phase Reconnect the electrical phases properly
	Shortage of oil in the tank	Add hydraulic oil
	Oil viscosity does not correspond to the prescribed viscosity value	Change hydraulic oil
	Hydro generator malfunction	Call service
	Wrong power supply connection	Check the correct connection of each phase Reconnect the electrical phases properly
2. Hydraulic oil contains bubbles	Hydraulic circuit is not adequately bled	Bleed the hydraulic circuit
	Low level of oil	Add hydraulic oil
	The hydro generator gasket is damaged	Call service
3. Increased mechanical noise	Damaged clutch of the drive	Call service
	Damaged or destroyed motor bearings	Call service
	Air intake	Check for leaks
4. Low pressure, pump supplies oil	Failure on the safety valve	Wrong settings Check the settings and adjust the safety valve
	Wear of the hydro generator	Call service
	External or internal leakages	Call service
5. Hydro generator is seized	Damage by solid particles in oil	Perform oil filtration or call the service
	Not keeping the prescribed viscosity of oil	Change hydraulic oil
	Wrong type of oil	Change hydraulic oil
	Exceeded lifespan of the pump	Call service
6. Overheating oil	Cooler malfunction	Check the cooler function or call service
	Wear of the pump, energy is converted into heat	Call service
7. Hydraulic valve	Electromagnet has no signal (voltage)	Perform recheck

Problem	Possible causes	Repair
cannot be readjusted	broken supply lines	
	Electromagnet coil burnt	Replace coil – Call service
	The slider of the switchboard slackens	Replace slider – Call service

6. Schémata / Schemas / Schematics

6.1. Elektrické schema /Elektroschema Wiring diagrams

6.1.1. Ergonomic 290.250 GAC without frequency converter 3x400V+PE, 50Hz

Obsah / Table of contents / Inhalt

Strana Page Seite	Název strany Page name Seitenname	Datum Date Datum
1	Úvodní strana / Start page / Startseite	22.4.2016
2	Obsah / Content / Inhalt	20.5.2016
3	Kusovník artiklů / Parts list / Artikelstückliste	20.5.2016
3.a	Kusovník artiklů / Parts list / Artikelstückliste	20.5.2016
3.b	Kusovník artiklů / Parts list / Artikelstückliste	20.5.2016
3.c	Kusovník artiklů / Parts list / Artikelstückliste	20.5.2016
4	Rozmístění prvků v rozvaděči R1 / Placement of elements in enclosure R1 / Platzierung der Elemente im Schaltschrank R1	25.4.2016
5	Ovládací panel na rozvaděči / Control panel / Badienpult	25.4.2016
6	Silová část / Power part / Netzteil	25.4.2016
7	Připojení pohonů / Drivings connection / Antriebsanschlub	25.4.2016
8	Propojení napájecích obvodů / Feeding circuits / Stromversorgungsgebiede	25.4.2016
9	Stýkače / Contactors / Schütze	25.4.2016
10	Signály spouštěčů, klávesnice / Signal of shields, keyboard / Schaltersignal, Tastatursignal	25.4.2016
11	Hydraulika / Hydraulics / Hydraulik	25.4.2016
12	Signály koncových spínačů / Signals of limit switches / signale der Endschalter	25.4.2016
13	Připojení modulů / Modules connection / Anschluss der Moduln	25.4.2016
14	Bezpečnostní obvod / Safety circuit / Sicherheitsschaltung	25.4.2016
15	Příslušenství / Accessories / Zubehör	25.4.2016
16	Signalizace LED diod	25.4.2016
17	Signalling LEDs	25.4.2016
18	LED Standanzeige	25.4.2016

BOMAR, s.r.o.
Těžební 1236/1
CZ 627 00, Brno

Stroj/Machine/Maschine: Ergonomic 290.250 GAC	Název stránky/Name page/Name seiten: Obsah / Content / Inhalt	Verze./Version/Version:	ES-2300-201/202-V1.1	List:
		Napájení/Power supply/Einspeisung:	3x400V + PE / 50Hz	2
		Datum/Date/Datum:	20.5.2016	Listů:
		Zpracoval/Processed/Hat verarbeitet:	Ing.Kostka	21

Kusovník artiklů / Parts list / Stückliste

Označení přístroje Device identification Geräteidentifikation	Typ přístroje Device description Gerätebeschreibung	Objednací číslo Type number Typennummer	Výrobce Manufacturer Hersteller	Skladové číslo Part number Lagernummer	Množství Quantity Menge	Umístění Location Stelle
-BM1	Bezpečnostní relé 24VDC, 3NO Safety relay 24VDC, 3NO Sicherheitsrelais 24VDC, 3NO	BT50	ABB	91.051.063	1	/14.5
-FA1	Motorový spouštěč - 0.4A Motor starter - 0.4A Motorstarter - 0.4A	MS116-0,4	ABB	91.045.017	1	/7.1
-FA1	Pomocné kontakty - 1xNO+1xNC Auxiliary contacts - 1xNO+1xNC Hilfskontakte - 1xNO+1xNC	HKF1-11	ABB	91.046.002	1	/7.1
-FA2	Motorový spouštěč - 1A Motor starter - 1A Motorstarter - 1A	MS116-1,00	ABB	91.045.019	1	/7.3
-FA2	Pomocné kontakty - 1xNO+1xNC Auxiliary contacts - 1xNO+1xNC Hilfskontakte - 1xNO+1xNC	HKF1-11	ABB	91.046.002	1	/7.3
-FA3	Motorový spouštěč - 4A Motor starter - 4A Motorstarter - 4A	MS116-4,0	ABB	91.045.022	1	/7.5
-FA3	Pomocné kontakty - 1xNO+1xNC Auxiliary contacts - 1xNO+1xNC Hilfskontakte - 1xNO+1xNC	HKF1-11	ABB	91.046.002	1	/7.5
-FA4	Motorový spouštěč - 4A Motor starter - 4A Motorstarter - 4A	MS116-4,0	ABB	91.045.022	1	/7.7
-FA4	Pomocné kontakty - 1xNO+1xNC Auxiliary contacts - 1xNO+1xNC Hilfskontakte - 1xNO+1xNC	HKF1-11	ABB	91.046.002	1	/7.7
-KM1	Ministýkač 4kW/400V Minicontactor 4kW/400V Minischutz 4kW/400V	B6S-30-01-1.7-71	ABB	91.040.049	1	/9.2
-KM2	Ministýkač 4kW/400V Minicontactor 4kW/400V Minischutz 4kW/400V	B6S-30-01-1.7-71	ABB	91.040.049	1	/9.4
-KM3	Ministýkač 4kW/400V Minicontactor 4kW/400V Minischutz 4kW/400V	B6S-30-01-1.7-71	ABB	91.040.049	1	/9.5

The manufacturer reserves right to use an equivalent replacement device.

2

Kusovník artiklů / Parts list / Stückliste

Označení přístroje Device identification Geräteidentifikation	Typ přístroje Device description Gerätebeschreibung	Objednací číslo Type number Typennummer	Výrobce Manufacturer Hersteller	Skladové číslo Part number Lagernummer	Množství Quantity Menge	Umístění Location Stelle
-KM4	Ministýkač 4kW/400V Minicontactor 4kW/400V Minischutz 4kW/400V	B6S-30-01-1.7-71	ABB	91.040.049	1	/9.7
-KM11	Ministýkač 4kW/400V Minicontactor 4kW/400V Minischutz 4kW/400V	B6S-30-01-1.7-71	ABB	91.040.049	1	/14.7
-KM11	Pomocné kontakty - 1xNO+1xNC Auxiliary contacts - 1xNO+1xNC Hilfskontakte - 1xNO+1xNC	CAF 6-11M	ABB	91.041.042	1	/14.7
-KM12	Ministýkač 4kW/400V Minicontactor 4kW/400V Minischutz 4kW/400V	B6S-30-01-1.7-71	ABB	91.040.049	1	/14.8
-KM12	Pomocné kontakty - 1xNO+1xNC Auxiliary contacts - 1xNO+1xNC Hilfskontakte - 1xNO+1xNC	CAF 6-11M	ABB	91.041.042	1	/14.8
-PA1	Pojistkový odpojovač E-90 - 2P Fuse disconnector E-90 - 2P Sicherungstrenner E90 - 2P	E 92/32	ABB	91.241.013	1	/8.4
-QS1	3 pólový odpínač, 16A Disconnector - 3P, 16A	OT16F3	ABB	91.170.015	1	/6.0
-A1.1	Sestavený modul CPU2-E (UNIVERZALNI) Assembled module CPU2-E (UNIVERSAL) Montiert Modul CPU2-E (UNIVERSAL)	CPU2-E	Bomar	266.222	1	/13.6
-A1.3	Sestavený modul JDI-2/2 Assembled module JDI-2/2 náhrada za 91.995.039	JDI-2/2	Bomar	266.216	1	/13.3
-A1.5	Sestavený modul JDO-2/0 (plně osazený) Assembled module JDO-2/0 (fully manned) náhrada za 91.995.040	JDO-2/0	Bomar	266.224	1	/13.0
-DKL	Sestavený modul DKL-F5 (display) Assembled module DKL-F5 (display) náhrada za 91.995.048	DKL-F5	Bomar	266.219	1	/13.8
-DM1	Výrobek-deska OCHRANA3 Product-board OCHRANA3 Produkt-board OCHRANA 3	OCHR3	Bomar	266.255	1	/8.3

The manufacturer reserves right to use an equivalent replacement device.

3

Kusovník artiklů / Parts list / Stückliste

Označení přístroje Device identification Geräteidentifikation	Typ přístroje Device description Gerätebeschreibung	Objednací číslo Type number Typennummer	Výrobce Manufacturer Hersteller	Skladové číslo Part number Lagernummer	Množství Quantity Menge	Umístění Location Stelle
-TR1	Transformátor - 160VA - 400/18/26V Transformer 160VA - 400/18/26V Transformator 160VA - 400/18 / 26V	JBC E4040-0387	ELEKTROKOV	91.080.037	1	/8.4
-FU1	Pojistka trubičková - 1A/250V, pomalá, 5x20 Tube fuse - 1A/250V, slow, 5x20 Rohrsicherung - 1A / 250V, langsam, 5x20	T1A/250V	ESKA	91.230.031	1	/8.4
-FU2	Pojistka trubičková - 6,3A/250V, pomalá, 5x20 Tube fuse - 6,3A/250V, slow, 5x20 Rohrsicherung - T6,3A / 250V, langsam, 5x20	T6,3A/250V	ESKA	91.230.002	1	/8.4
-SB500	Total stop - hlavice + 3xNC Emergency-stop mushroom push - button + 3xNC Not-Aus-Pilz - Taster + 3 xNC	YW1B-V4E02R	IDEC	91.060.084	1	/14.4
-SB500	Kontakt - 1x NO Contact - 1x NO Kontakt - 1x NO	YW-E10	IDEC	91.061.044	1	/14.4
-RCF1	Filtr RFC vývodový Efferent RFC filter Ableitenden RFC Filter	FBOPR1624	Ing. Miroslav Vlček	91.041.015	1	/7.0
-RCF2	Filtr RFC vývodový Efferent RFC filter Ableitenden RFC Filter	FBOPR1624	Ing. Miroslav Vlček	91.041.015	1	/7.2
-RCF3	Filtr RFC vývodový Efferent RFC filter Ableitenden RFC Filter	FBOPR1624	Ing. Miroslav Vlček	91.041.015	1	/7.4
-RCF4	Filtr RFC vývodový Efferent RFC filter Ableitenden RFC Filter	FBOPR1624	Ing. Miroslav Vlček	91.041.015	1	/7.6
-RCF11	Filtr RFC vývodový Efferent RFC filter Ableitenden RFC Filter	FBOPR1624	Ing. Miroslav Vlček	91.041.015	1	/6.6
-RCF12	Filtr RFC vývodový Efferent RFC filter Ableitenden RFC Filter	FBOPR1624	Ing. Miroslav Vlček	91.041.015	1	/6.7
-SQ21	Bezpečnostní koncový spínač - 2xNC Safety Limit Switch - 2x NC Sicherheitsendschalter - 2x NC	QKS8	KEDU	91.173.012	1	/14.4

The manufacturer reserves right to use an equivalent replacement device.

3.a

BOMAR, s.r.o.
Těžební 1236/1
CZ 627 00, Brno

Stroj/Machine/Maschine: Ergonomic 290.250 GAC

Název stránky/Name page/Name seiten: Kusovník artiklů / Parts list / Artikelstückliste

Číslo dok./Doc.No/Anzahl der Dokumente.:	ES-2300-201/202-V1.1	List/Page/Seite:	3.b
Napájení/Power supply/Einspeinsung:	3x400V + PE / 50Hz	Listů/Pages/Seiten:	21
Zpracoval/Processed /Hat verarbeitet:	Ing.Kostka		
Datum/Date/Datum:	20.5.2016		

Kusovník artiklů / Parts list / Stückliste

Označení přístroje Device identification Geräteidentifikation	Typ přístroje Device description Gerätebeschreibung	Objednací číslo Type number Typennummer	Výrobce Manufacturer Hersteller	Skladové číslo Part number Lagernummer	Množství Quantity Menge	Umístění Location Stelle
-SQ22	Bezpečnostní koncový spínač - 2xNC Safety Limit Switch - 2x NC Sicherheitsendschalter - 2x NC	QKS8	KEDU	91.173.012	1	/14.2
-PA1	Pojistka válcová - 1A, 10x38, pomalá Tube fuse - 1A, 10x38, slow Rohrsicherung - 1A, 10x38, langsam	PV10 1A aM	OEZ	91.231.001	2	/8.4
-QS2	Spínač vačkový - 2 polohy Switch cam - 2 positions Switch cam - 2 positions	S10-60129	SALZER ELECTRONICS LIMITED	91.171.006	1	/7.7
-SA1	SPÍNAČ ČERNÝ 3 polohy - Harmony Switch black 3 positions - Harmony Schalter schwarz 3 Positionen - Harmony	ZB5-AD3	TELEMECANIQUE	91.060.024	1	/10.4
-SA2	SPÍNAČ ČERNÝ 3 polohy - Harmony Switch black 3 positions - Harmony Schalter schwarz 3 Positionen - Harmony	ZB5-AD3	TELEMECANIQUE	91.060.024	1	/10.7
-SB1	hlavice zelená prosvětlená - Harmony Head green backlit - Harmony Kopf grün Hintergrundbeleuchtung - Harmony	ZB5AW33	TELEMECANIQUE	91.060.019	1	/10.5
-SB2	Hlavice tlačítka černá Button black head Taste Mitesser	ZB5AA2	TELEMECANIQUE	91.060.013	1	/10.6
-SB501	Hlavice prosvětleného tlačítka žlutá The button head backlit yellow Der Knopf Kopf von hinten beleuchtet gelb	ZB5AW35	TELEMECANIQUE	91.060.023	1	/14.6
-RCF0	Vstupní odrušovací filtr 16A Input noise filter 16A Eingangsrauschfilter 16A	16EB15/50	WIDECOM TECHNOLOGY s.r.o.	91.041.062	1	/6.1
-FU1	Svorka pojistková Fuse terminal Sicherungsklemme	WK4/THSI5U	WIELAND	91.251.102	1	/8.4
-FU2	Svorka pojistková Fuse terminal Sicherungsklemme	WK4/THSI5U	WIELAND	91.251.102	1	/8.4

The manufacturer reserves right to use an equivalent replacement device.

3.b

+R1

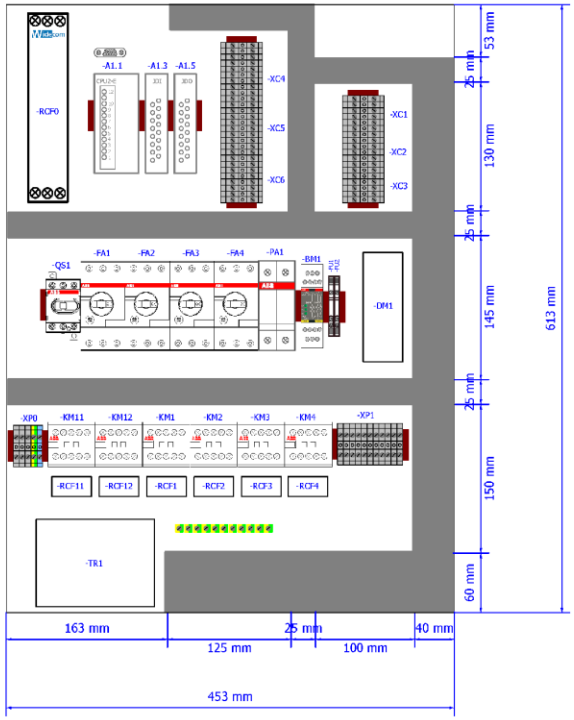

3.c

BOMAR, s.r.o. Těžební 1236/1 CZ 627 00, Brno	Stroj/Machine/Maschine: Ergonomic 290.250 GAC	Název stránky/Name page/Name seiten: Rozmístění prvků v rozvaděči R1 / Placement of elements in enclosure R1 / Platzierung der Elemente im Schaltschrank R1	Číslo dok./Doc.No/Anzahl der Dokumente.:	ES-2300-201/202-V1.1	List/Page/Seite: 4
			Napájení/Power supply/Einspeisung:	3x400V + PE / 50Hz	Listů/Pages/Seiten: 21
			Zpracoval/Processed /Hat verarbeitet:	Ing.Kostka	
			Datum/Date/Datum:	25.4.2016	

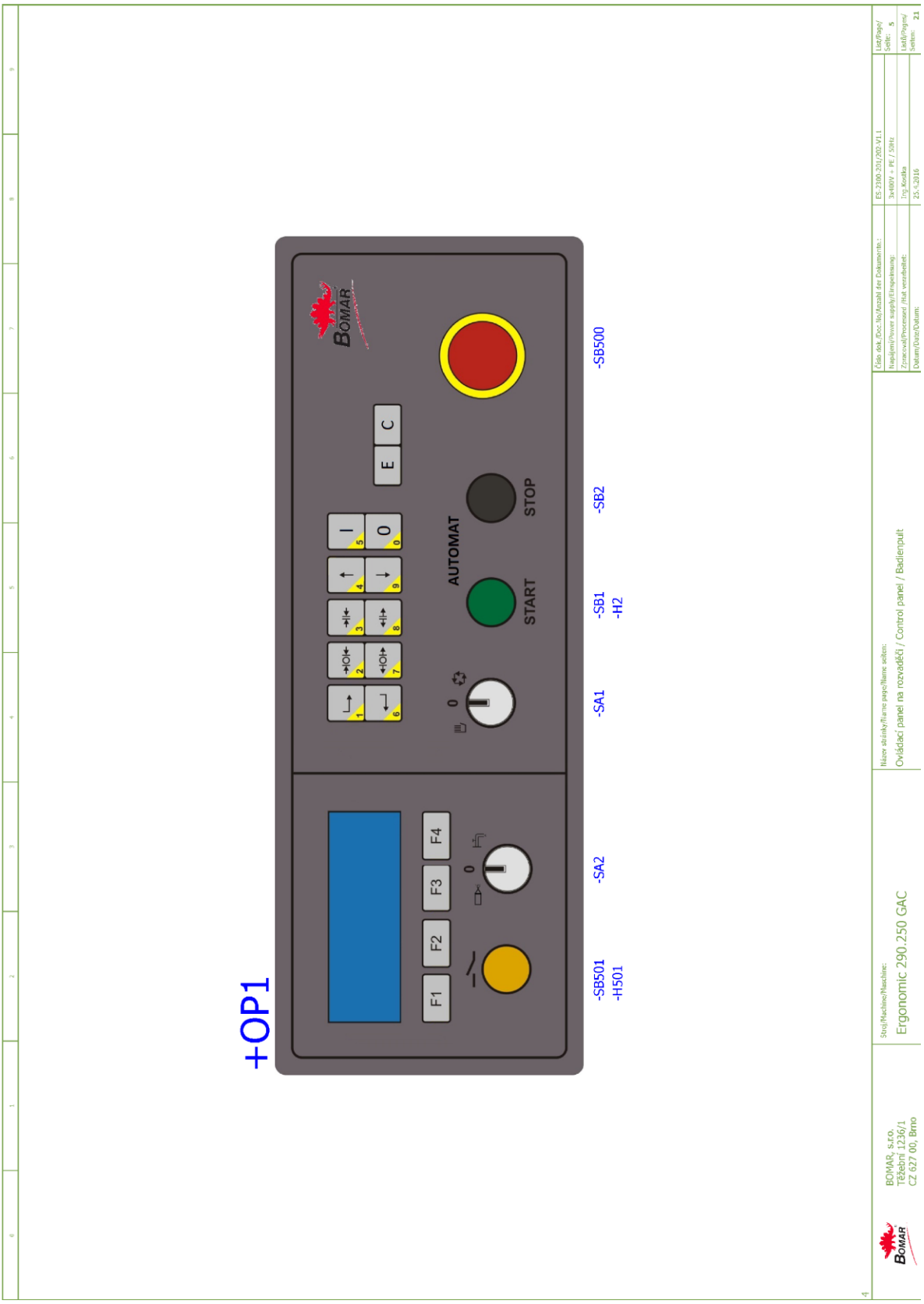
+OP1
F1
F2
F3
F4
AUTOMAT
START
STOP
E
C
-SB501
-H501
-SA2
-SA1
-SB1
-H2
-SB2
-SB500
Stroj/Machine/Maschine:
Ergonomic 290.250 GAC
Název skratky/Name page/Name seiten:
Ovládací panel na rozvaděči / Control panel / Badienpult
BOMAR, s.r.o.
Těšební 1236/1
CZ 627 00, Brno
Číslo dok./Doc.No/Anzahl der Dokumente:
ES 2390.203/202-V1.1
List/Page/Seite: 5
Napájení/Power supply/Einspeisung:
3x400V + PE / 50Hz
List/Page/Seiten: 21
Zpracoval/Processed / Hat verarbeitet:
Ing.Kocka
Datum/Date/Datum:
25.4.2016

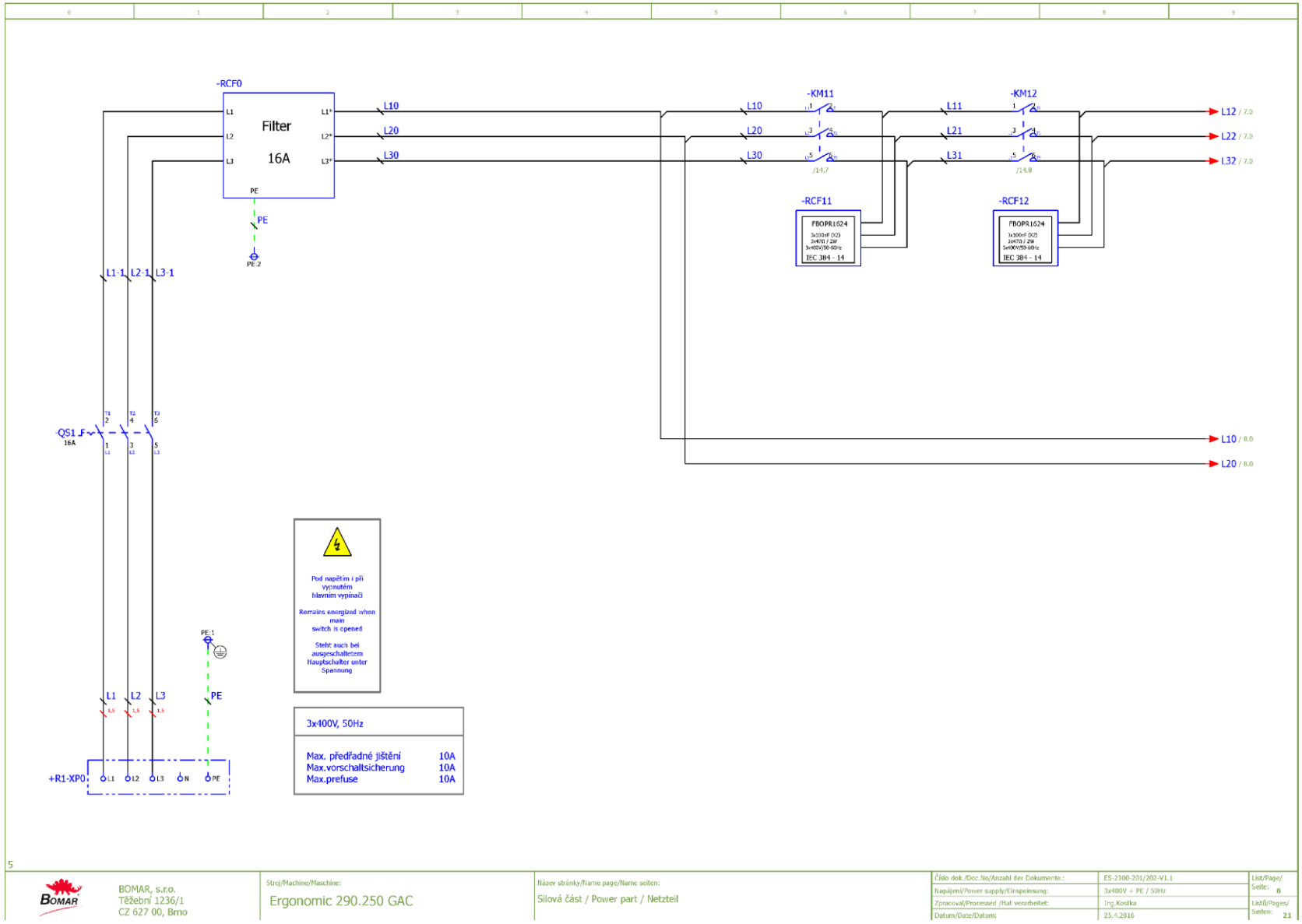

Schémata
Schemas
Schematics

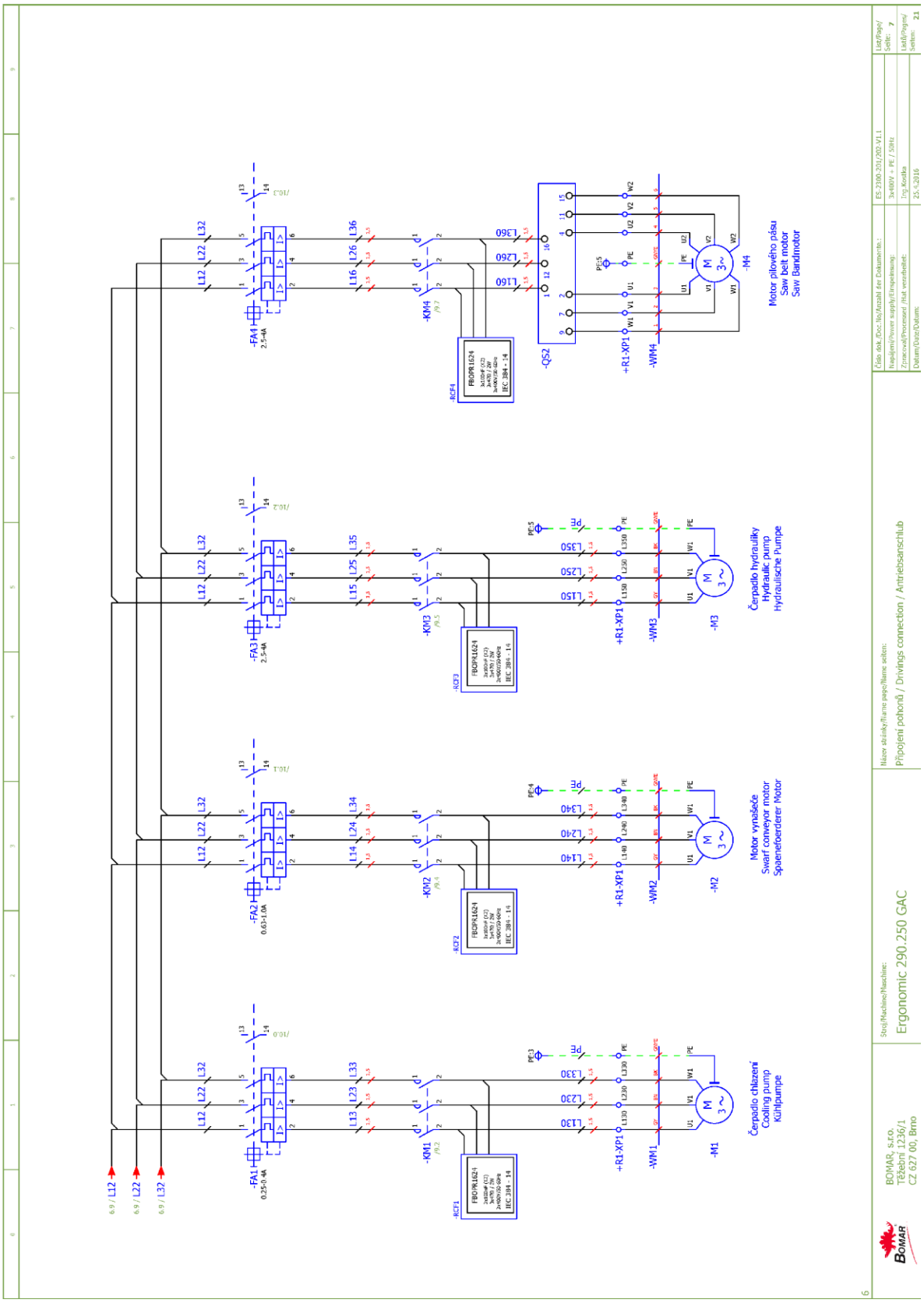
Čerpadlo chlazení
Cooling pump
Kühlpumpe
Motor vynášeče
Swarf conveyor motor
Spaneneforderer Motor
Čerpadlo hydrauliky
Hydraulic pump
Hydrauliische Pumpe
Motor pilového pásu
Saw belt motor
Saw Bandmotor
BOMAR, s.r.o.
Těšební 1236/1
CZ 627 00, Brno
Stroj/Machine/Maschine:
Ergonomic 290.250 GAC
Název schéma/Name page/Name seiten:
Připojení pohonů / Drivings connection / Antriebsanschlub
ES 2300.203/200-V1.1
3x400V + PE / 50Hz
Trg.Kocka
25.4.2016

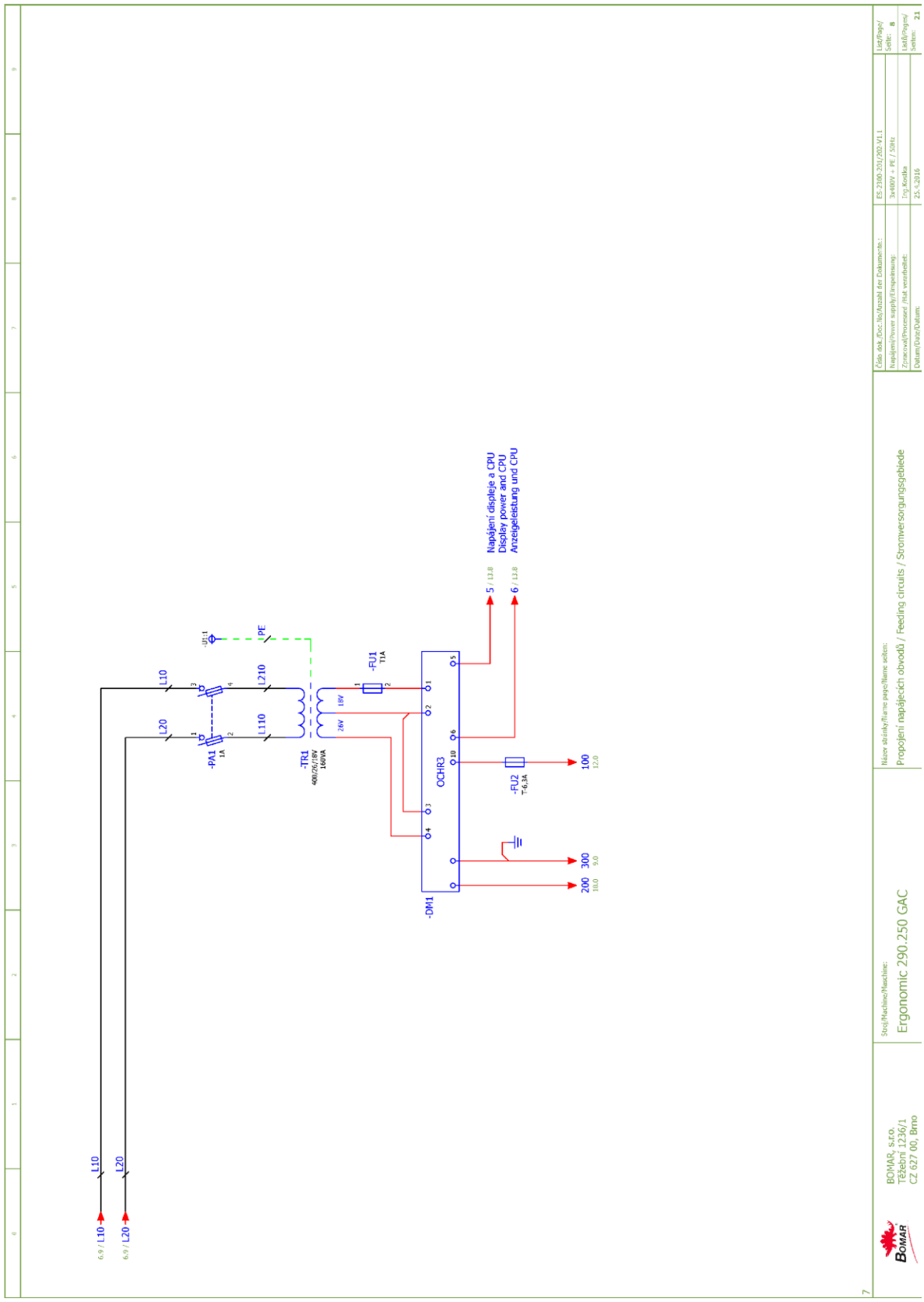
6.9 / L10
6.9 / L20
L10
L20
-PA1
1A
L10
L20
L210
L110
-TR1
400/26/18V
160VA
26V
18V
-FU1
T1A
PE
-DM1
OCHR3
-FU2
T-6,3A
5 / 13.8
6 / 13.8
Napájení displeje a CPU
Display power and CPU
Anzeigeleistung und CPU
100
12.0
300
9.0
200
11.0
BOMAR, s.r.o.
Těžební 1236/1
CZ 627 00, Brno
Stroj/Machine/Maschine:
Ergonomic 290.250 GAC
Název stránky/Name page/Name seiten:
Propojení napájecích obvodů / Feeding circuits / Stromversorgungsgebiede
Číslo dok./Doc. No./Anzahl der Dokumente:
ES 2380.231/202-V1.1
List/Page/Seite: 8
Napájení/Power supply/Einspeisung:
3x400V + PE / 50Hz
List/Page/Seiten: 21
Zpracoval/Processed / Hat verarbeitet:
Ing. Kostka
Datum/Date/Datum:
25.4.2016

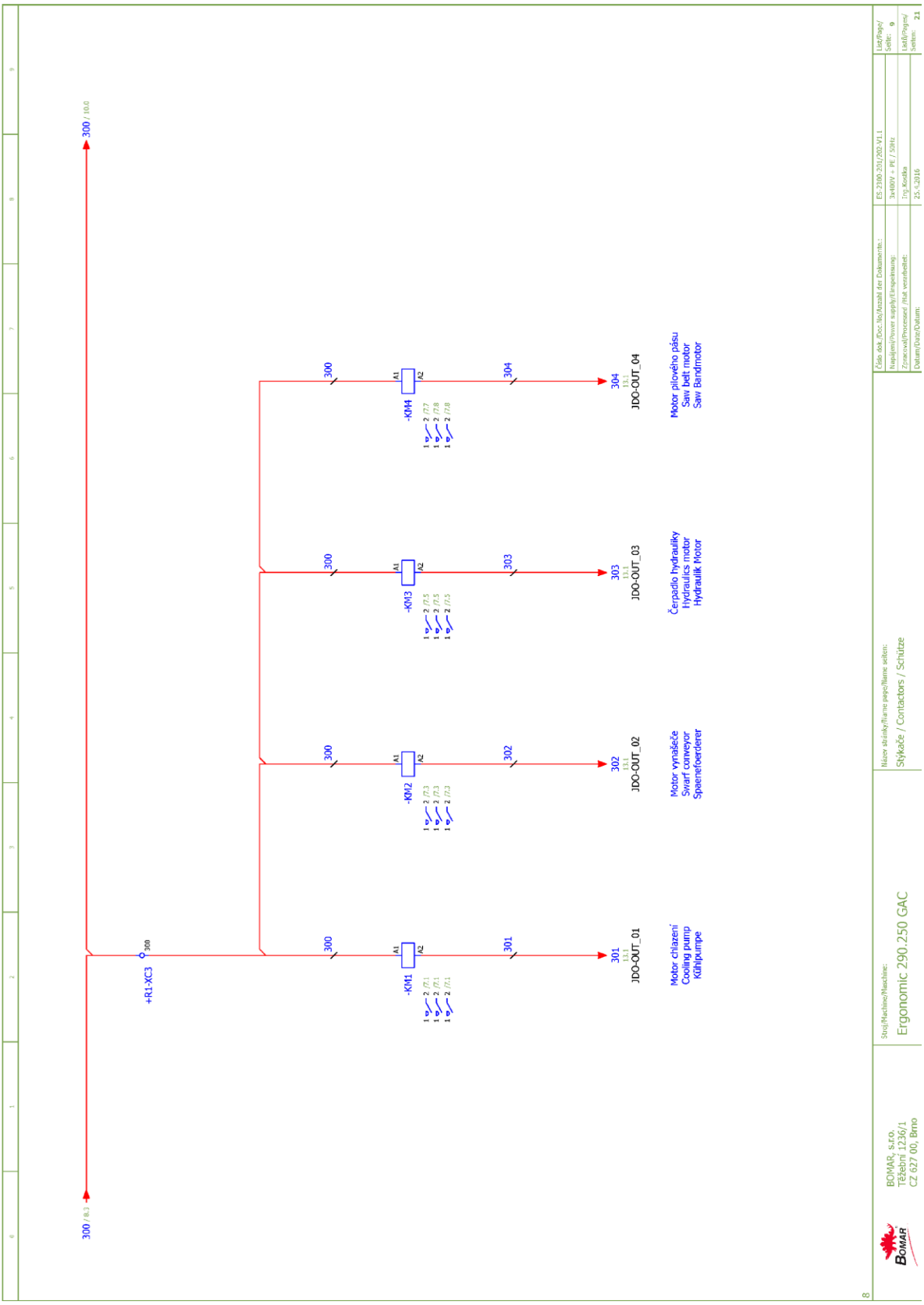
300 / 10.0
300 / 8.3
+R1-XC3
300
-KM1
-KM2
-KM3
-KM4
A1
A2
301
302
303
304
JDO-OUT_01
JDO-OUT_02
JDO-OUT_03
JDO-OUT_04
Motor chlazení
Cooling pump
Kühlpumpe
Motor vynašeče
Swarf conveyor
Spaneförderer
Čerpadlo hydrauliky
Hydraulics motor
Hydraulik Motor
Motor pilového pásu
Saw belt motor
Saw bandmotor
Číslo dok./Doc. No./Anzahl der Dokumente:
ES 2390.201/202-V1.1
Napájení/Power supply/Einspeisung:
3x400V + PE / 50Hz
Zpracoval/Processed / Hat verarbeitet:
Ing. Kostka
Datum/Date/Datum:
25.4.2016
List/Page/Seite:
9
List/Pages/Seiten:
21
Název zásuvky/Name page/Name seiten:
Stýkače / Contactors / Schütze
Stroj/Machine/Maschine:
Ergonomic 290.250 GAC
BOMAR, s.r.o.
Těšínská 1236/1
CZ 627 00, Brno
BOMAR

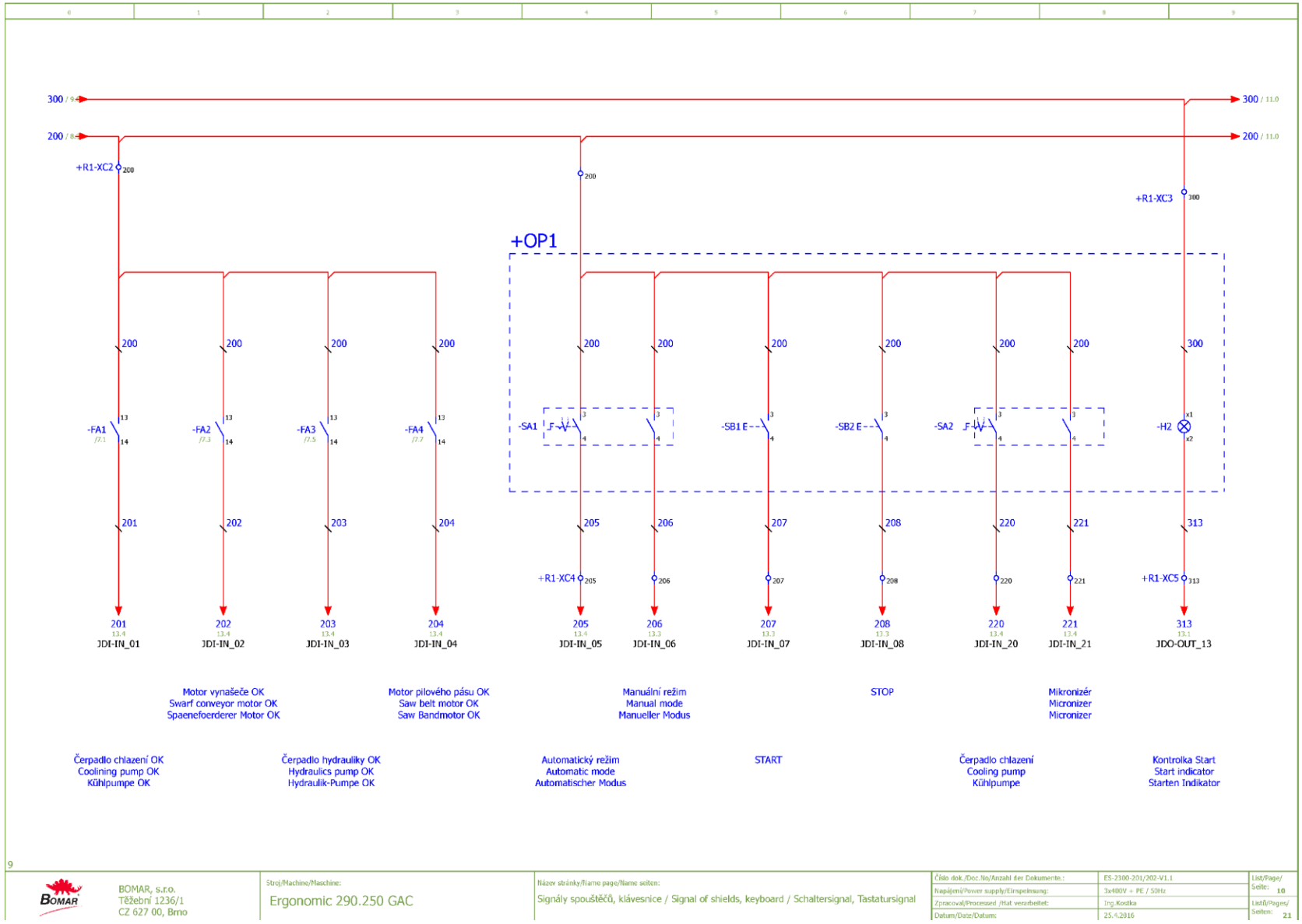

Schémata
Schemas
Schematics

Schémata
Schemas
Schematics

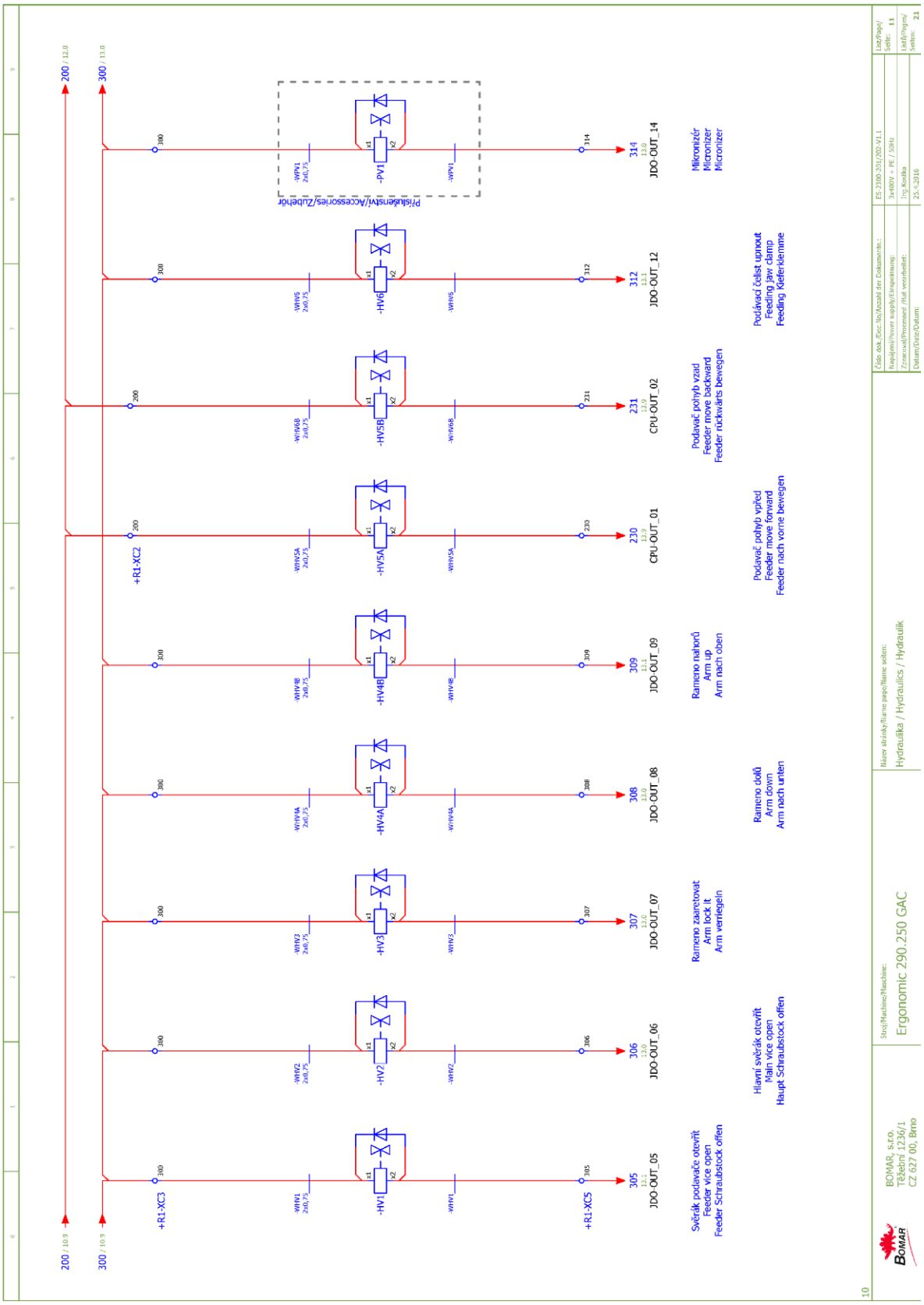

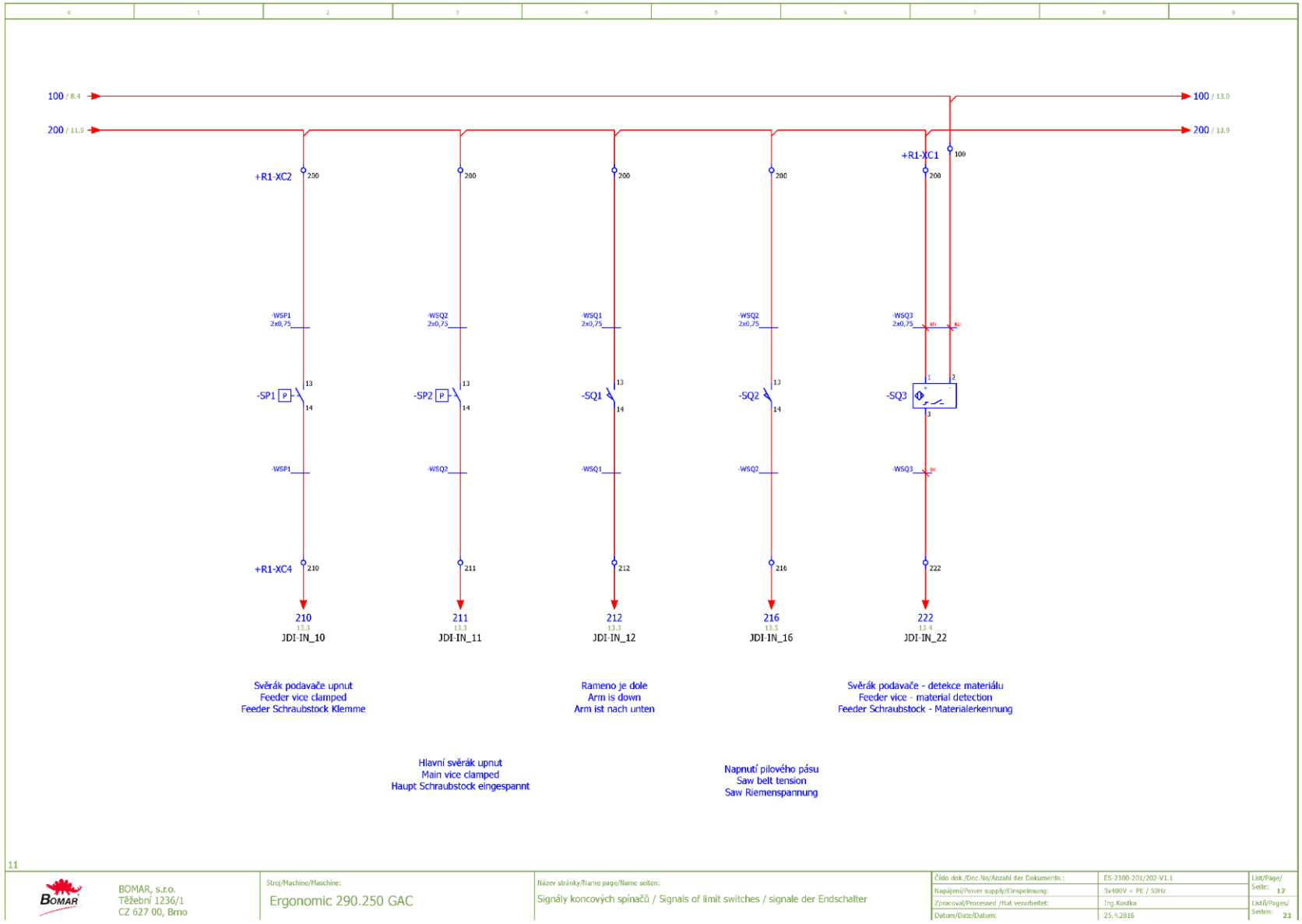
100 / 8.4
200 / 11.9
100 / 13.0
200 / 13.9
+R1-XC2
+R1-XC1
+R1-XC4
-WSP1 2x0,75
-WSQ2 2x0,75
-WSQ1 2x0,75
-WSQ2 2x0,75
-WSQ3 2x0,75
-SP1
-SP2
-SQ1
-SQ2
-SQ3
-WSP1
-WSQ2
-WSQ1
-WSQ2
-WSQ3
210 13.3 JDI-IN_10
211 13.3 JDI-IN_11
212 13.3 JDI-IN_12
216 13.5 JDI-IN_16
222 13.4 JDI-IN_22
Svěrák podavače upnut
Feeder vice clamped
Feeder Schraubstock Klemme
Rameno je dole
Arm is down
Arm ist nach unten
Svěrák podavače - detekce materiálu
Feeder vice - material detection
Feeder Schraubstock - Materialerkennung
Hlavní svěrák upnut
Main vice clamped
Haupt Schraubstock eingespannt
Napnutí pilového pásu
Saw belt tension
Saw Riemenspannung
11
BOMAR, s.r.o.
Těžební 1236/1
CZ 627 00, Brno
Stroj/Machine/Maschine:
Ergonomic 290.250 GAC
Název stránky/Name page/Name seiten:
Signály koncových spínačů / Signals of limit switches / signale der Endschalter
Číslo dok./Doc.No/Anzahl der Dokumente.: ES-2300-201/202-V1.1
Napájení/Power supply/Einspeisung: 3x400V + PE / 50Hz
Zpracoval/Processed /Hat verarbeitet: Ing.Kostka
Datum/Date/Datum: 25.4.2016
List/Page/Seite: 12
Listů/Pages/Seiten: 21

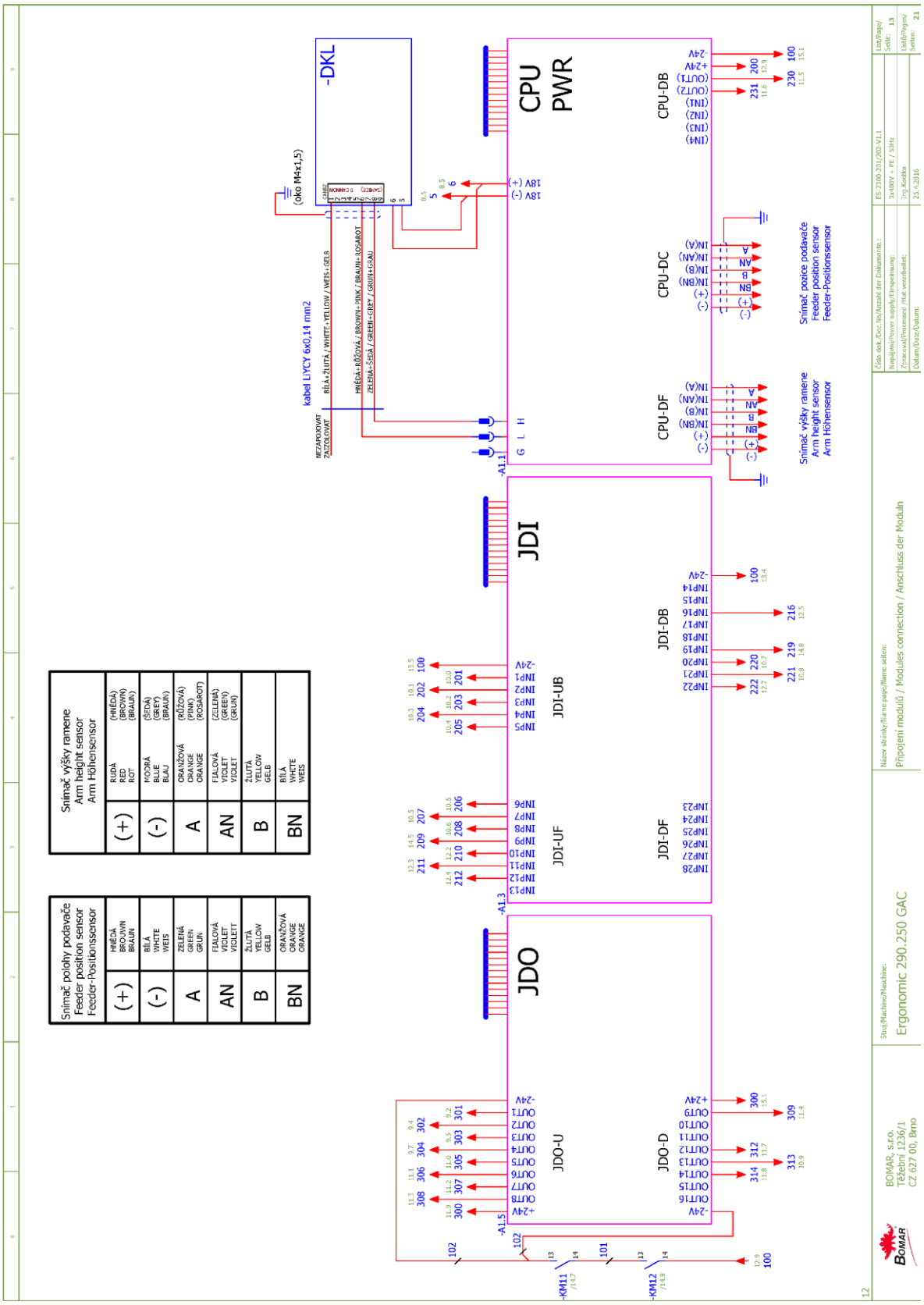
Snímač výšky ramene
Arm height sensor
Arm Höhensensor
(+) RUDÁ RED ROT (HNĚDÁ) (BROWN) (BRAUN)
(-) MODRÁ BLUE BLAU (ŠEDÁ) (GREY) (BRAUN)
A ORANŽOVÁ ORANGE ORANGE (RŮŽOVÁ) (PINK) (ROSAROT)
AN FIALOVÁ VIOLET VIOLET (ZELENÁ) (GREEN) (GRÜN)
B ŽLUTÁ YELLOW GELB
BN BÍLÁ WHITE WEIS
Snímač polohy podavače
Feeder position sensor
Feeder-Positionssensor
(+) HNĚDÁ BROWN BRAUN
(-) BÍLÁ WHITE WEIS
A ZELENÁ GREEN GRÜN
AN FIALOVÁ VIOLETT VIOLETT
B ŽLUTÁ YELLOW GELB
BN ORANŽOVÁ ORANGE ORANGE
-DKL
(oko M4x1,5)
kabel LYCY 6x0,14 mm2
NEZAPOJOVAT
ZAIZOLOVAT
BÍLÁ+ŽLUTÁ / WHITE+YELLOW / WEIS+GELB
HNĚDÁ+RŮŽOVÁ / BROWN+PINK / BRAUN+ROSAROT
ZELENÁ+ŠEDÁ / GREEN+GREY / GRÜN+GRAU
18V (+)
18V (-)
CPU
PWR
CPU-DB
CPU-DC
CPU-DF
Snímač pozice podavače
Feeder position sensor
Feeder-Positionssensor
Snímač výšky ramene
Arm height sensor
Arm Höhensensor
JDI
JDI-UB
JDI-UF
JDI-DB
JDI-DF
JDO
JDO-U
JDO-D
-A1.1
-A1.3
-A1.5
-KM11
-KM12
Číslo dok./Doc.No/Anzahl der Dokumente:
ES 2360-203/202-V1.1
List/Page/Seite: 13
Napájení/Power supply/Eingeleitung:
3x400V + PE / 50Hz
List/Pages/Seiten: 21
Zpracoval/Processed/ /Hat verarbeitet:
Ing.Kocka
Datum/Date/Datum:
25.4.2016
Název skříňky/Name panel/Name schrank:
Připojení modulů / Modules connection / Anschluss der Module
Stroj/Machine/Maschine:
Ergonomic 290.250 GAC
BOMAR, s.r.o.
Těšínská 1236/1
CZ 627 00, Brno
12

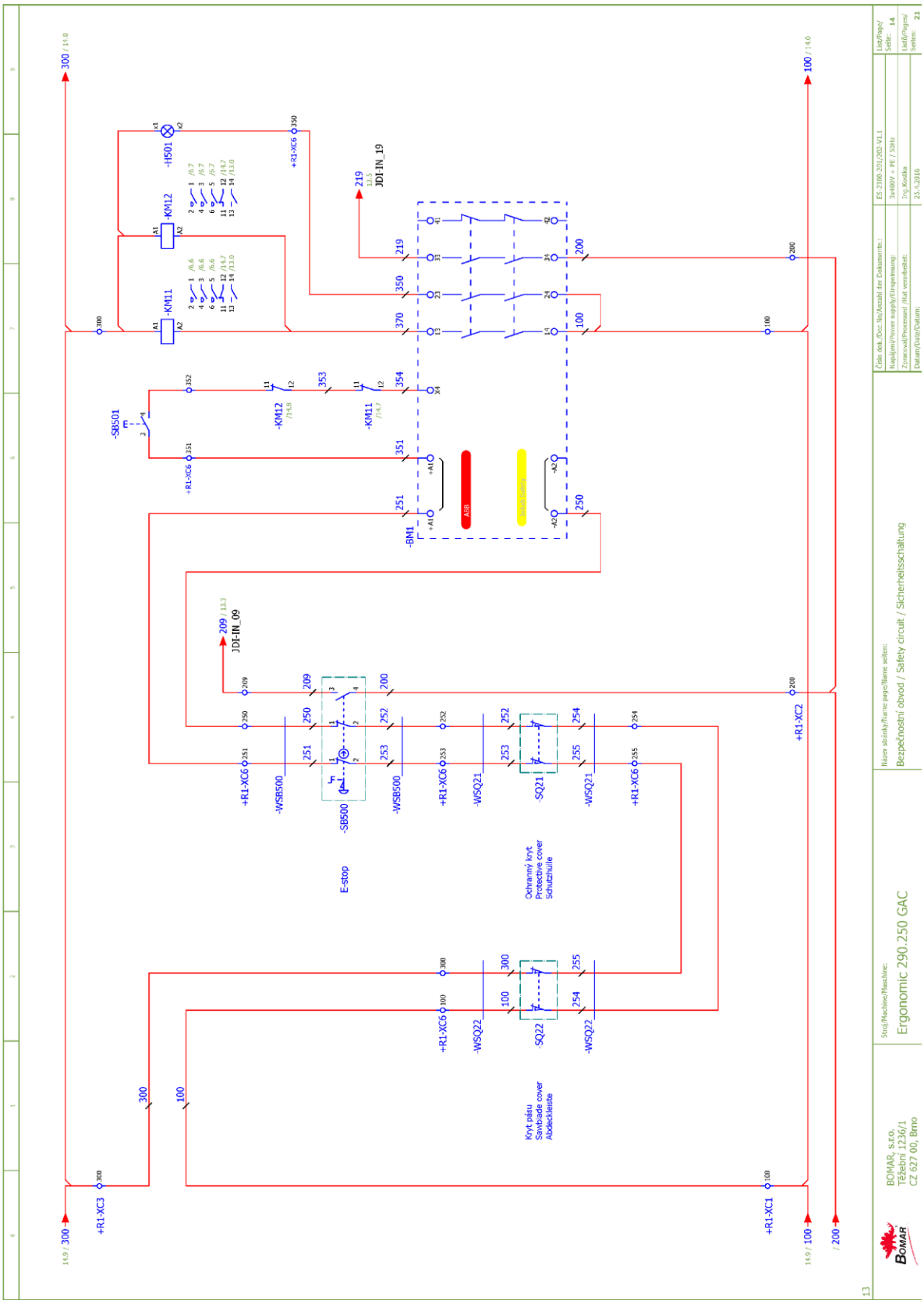
Číslo dok./Doc. No./Anzahl der Dokumente:
ES 2380.231/202-V1.1
List/Page/
Seite: 14
Napájení/Power supply/Einspeisung:
3x400V + PE / 50Hz
Listů/Pages/
Seiten: 21
Zpracoval/Processed/ Hat verarbeitet:
Ing. Kostka
Datum/Date/Datum:
25.4.2016
Název stránky/Name page/Name seiten:
Bezpečnostní obvod / Safety circuit / Sicherheitsschaltung
Stroj/Machine/Maschine:
Ergonomic 290.250 GAC
BOMAR, s.r.o.
Těšeňní 1236/1
CZ 627 00, Brno
E-stop
Ochranný kryt
Protective cover
schutzhülle
Kryt pásu
Sawblade cover
Abdeckleiste
-SB501
-KM12
-KM11
-H501
-BM1
-SB500
-WSB500
-WSQ21
-SQ21
-WSQ22
-SQ22
+R1-XC6
+R1-XC3
+R1-XC1
+R1-XC2
+R3-XC6
JDI-IN_19
JDI-IN_09
ABB
300 / 14.0
100 / 14.0
14.9 / 300
14.9 / 100
/ 200

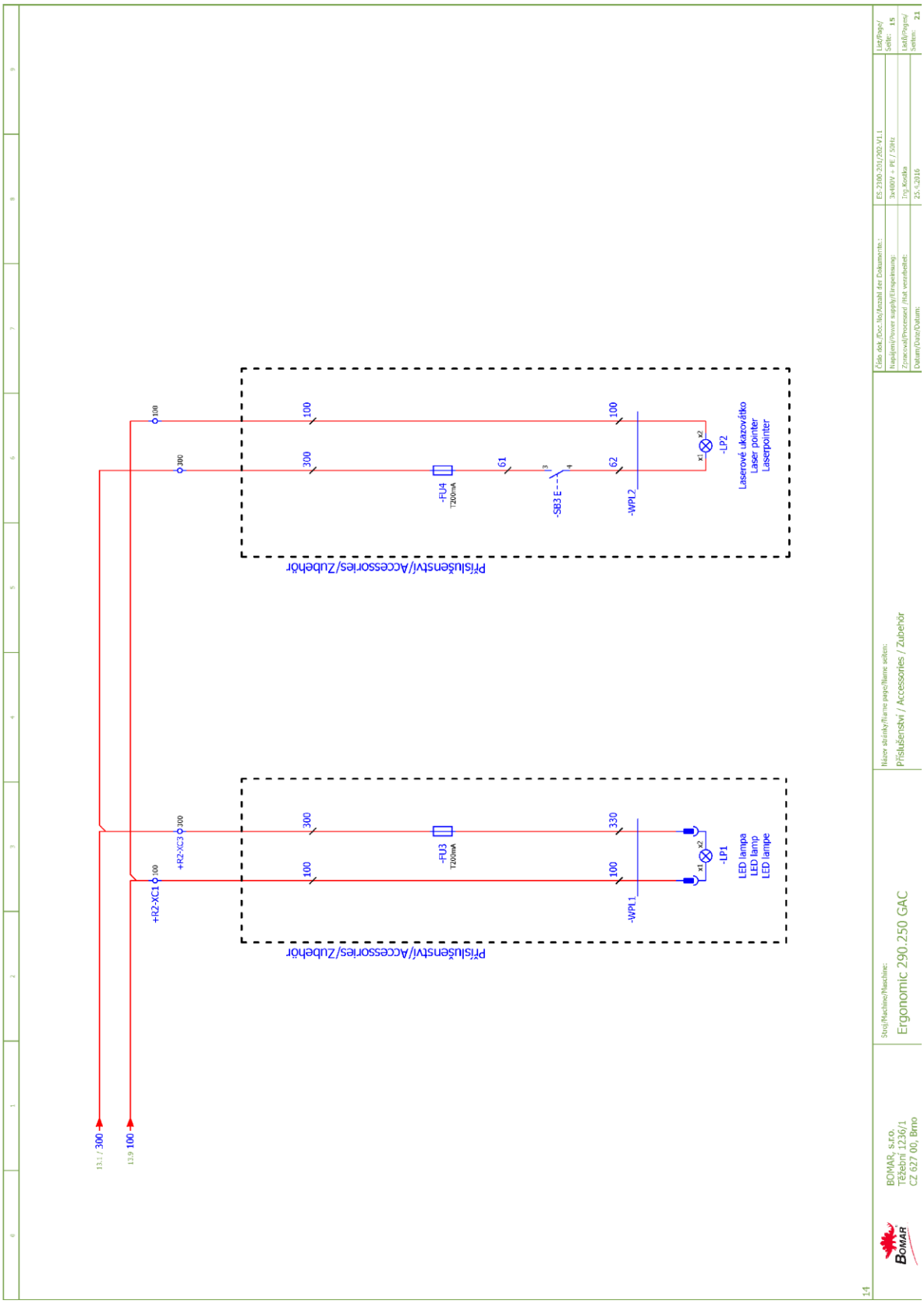
13.1 / 300
13.9 100
+R2-XC1 100
+R2-XC3 300
100
300
-FU3
T200mA
-FU4
T200mA
-WPL1
-WPL2
330
61
62
-SB3 E
-LP1
-LP2
LED lampa
LED lamp
LED lampe
Laserové ukazovátko
Laser pointer
Laserpointer
Příslušenství/Accessories/Zubehör
Číslo dok./Doc. No./Anzahl der Dokumente:
Napájení/Power supply/Einspeisung:
3x400V + PE / 50Hz
Zpracoval/Processed / Hat verarbeitet:
Ing. Kostka
Datum/Date/Datum:
25.4.2016
ES 2300.203/200 V1.1
List/Page/Seite: 15
List/Pages/Seiten: 21
Název skónky/Name page/Name seiten:
Příslušenství / Accessories / Zubehör
Stroj/Machine/Maschine:
Ergonomic 290.250 GAC
BOMAR, s.r.o.
Těšeňní 1236/1
CZ 627 00, Brno
14

	JDO - Signalizace stavu výstupů
16	
15	
14	Aktivovat mikronizér
13	Aktivovat kontrolku automatického režimu
12	Podávací čelist uplnout
11	
10	
9	Rameno nahoru
8	Rameno dolů
7	Rameno aretovat
6	Otevřít hlavní svěrák
5	Otevřít podávací věrák
4	Zapnout motor pásu
3	Zapnout čerpadlo hydrauliky
2	Zapnout motor vynašeče
1	Zapnout motor chlazení

	JDI - Signalizace stavu vstupů	
	Tlačítko uvolněno	Tlačítko stisknuto
16	Pás pily napnout	
15		
14		
13		
12	Rameno je dole	
11	Hlavní svěrák upnut	
10	Podávací svěrák upnut	
9	Total stop aktivován	
8	Stop automatického režimu	
7	Start automatického režimu	
6	Aktivováno ruční ovládání	Materiál přítomen - podávací svěrák
5	Aktivováno automatické ovládání	Aktivován mikronizér
4	Ochrana motoru pásu OK	Aktivován motor chlazení
3	Ochrana čerpadla hydrauliky OK	Bezpečnostní obvod uzavřen
2	Ochrana motoru vynašeče OK	
1	Ochrana motoru chlazení OK	

	CPU - Signalizace stavu jednotky
12	Napájení 5V
11	Napájení 5V - KOM
10	Interní CAN - TXD
9	Interní CAN - RXD
8	Externí CAN - TXD
7	Externí CAN - RXD
6	
5	
4	Zadaná poloha dosažena
3	Regulace podavače aktivní
2	Podavač dozadu
1	Podavač dopředu

15

BOMAR, s.r.o.
Těžební 1236/1
CZ 627 00, Brno

Stroj/Machine/Maschine: Ergonomic 290.250 GAC

Název stránky/Name page/Name seiten: Signalizace LED diod

Číslo dok./Doc.No/Anzahl der Dokumente.:	ES-2300-201/202-V1.1
Napájení/Power supply/Einspeisung:	3x400V + PE / 50Hz
Zpracoval/Processed /Hat verarbeitet:	Ing.Kostka
Datum/Date/Datum:	25.4.2016

List/Page/Seite: 16
List/Pages/Seiten: 21

	JDO - Output state signalization
16	
15	
14	Activate the microniser
13	Switch on the automatic cycle indicator
12	Vice the feeding jaw
11	
10	
9	Put the arm up
8	Put the arm down
7	Unlock the arm
6	Open the main gripper
5	Open the feeding gripper
4	Turn on the band motor
3	Turn on the hydraulic pump
2	Turn on the swarf-removal motor
1	Turn on the cooling motor

	JDI - Input state signalization	
	Button released	Button pushed
16	Tight the sawband	
15		
14		
13		
12	The arm is down	
11	Main gripper is closed	
10	Feeding gripper is closed	
9	Total stop aktivated	
8	Automatic mode stopped	
7	Automatic mode started	
6	Manual control activated	Material is present - feeding gripper
5	Automatic control activated	Microniser activated
4	Band motor protection OK	Cooling motor activated
3	Hydraulic pump protection OK	Security circuit is OK
2	Swarf-rem. motor protection is OK	
1	Cooling motor protection OK	

	CPU - unit state signalization
12	Voltage 5V
11	Voltage 5V - KOM
10	Internal CAN - TXD
9	Internal CAN - RXD
8	External CAN - TXD
7	External CAN - RXD
6	
5	
4	Desired location reached
3	Feeder regulation is active
2	Feeder to the back
1	Feeder to the front

16

BOMAR, s.r.o.
Těžební 1236/1
CZ 627 00, Brno

Stroj/Machine/Maschine: Ergonomic 290.250 GAC

Název stránky/Name page/Name seiten: Signalling LEDs

Číslo dok./Doc.No/Anzahl der Dokumente.:	ES-2300-201/202-V1.1	List/Page/Seite: 17
Napájení/Power supply/Einspeisung:	3x400V + PE / 50Hz	
Zpracoval/Processed /Hat verarbeitet:	Ing.Kostka	Listů/Pages/Seiten: 21
Datum/Date/Datum:	25.4.2016	

	JDO - Ausgabe - Standanzeige
16	
15	
14	Microniser aktivieren
13	Kontrolleuchte (aut.Betrieb) aktivieren
12	Vorschubbacke spannen
11	
10	
9	Sägerahmen nach oben
8	Sägerahmen nach unten
7	Sägerahmen nicht arretieren
6	Hauptschraubstock öffnen
5	Vorschubschraubstock öffnen
4	Sägebandantrieb einschalten
3	Hydraulikpumpe einschalten
2	Spänförderer einschalten
1	Kühlmittelpumpe einschalten

	JDI - Eingabe - Standanzeige	
	Taste gelöst	Taste gedrückt
16	Sägeband gespannt	
15		
14		
13		
12	Sägerahmen unten	
11	Hauptschraubstock gespannt	
10	Vorschubschraubstock gespannt	
9	NON-AUS Taste	
8	STOP des automatischen Zyklus	
7	START des automatischen Zyklus	
6	Manuelles bedienen aktiviert	Material anwesend - Vorschubschraub.
5	Automatisches Bedienen aktiviert	Microniser aktiviert
4	Schutz des Sägebandantriebes OK	Kühlmittelpumpe aktiviert
3	Schutz der Hydraulikpumpe OK	Sicherheitsschaltung verbunden
2	Schutz des Spänförderers OK	
1	Schutz der Kühlmittelpumpe OK	

	CPU - Ausgabe - Einheitsstand
12	Versorgung 5V
11	Versorgung 5V - KOM
10	Intern CAN - TXD
9	Intern CAN - RXD
8	Extern CAN - TXD
7	Extern CAN - RXD
6	
5	
4	Vorschub in der gewünschten Position
3	Vorschubregulierung aktiv
2	Vorschub nach hinten
1	Vorschub nach vorne

17

BOMAR, s.r.o.
Těžební 1236/1
CZ 627 00, Brno

Stroj/Machine/Maschine: Ergonomic 290.250 GAC

Název stránky/Name page/Name seiten: LED Standanzeige

Číslo dok./Doc.No/Anzahl der Dokumente.:	ES-2300-201/202-V1.1	List/Page/Seite: 18
Napájení/Power supply/Einspeisung:	3x400V + PE / 50Hz	Listů/Pages/Seiten: 21
Zpracoval/Processed /Hat verarbeitet:	Ing.Kostka	
Datum/Date/Datum:	25.4.2016	

6.1.2. Ergonomic 290.250 GAC with frequency converter 3x400V+PE, 50Hz

Obsah / Table of contents / Inhalt

Strana Page Seite	Název strany Page name Seitenname	Datum Date Datum
1	Úvodní strana / Start page / Startseite	22.4.2016
2	Obsah / Content / Inhalt	20.5.2016
3	Kusovník artiklů / Parts list / Artikelstückliste	20.5.2016
3.a	Kusovník artiklů / Parts list / Artikelstückliste	20.5.2016
3.b	Kusovník artiklů / Parts list / Artikelstückliste	20.5.2016
3.c	Kusovník artiklů / Parts list / Artikelstückliste	20.5.2016
3.d	Kusovník artiklů / Parts list / Artikelstückliste	20.5.2016
4	Rozmístění prvků v rozvaděči R1, R2 / Placement of elements in enclosure R1, R2 / Platzierung der Elemente im Schaltschrank R1, R2	25.4.2016
5	Ovládací panel na rozvaděči / Control panel / Badienpult	22.4.2016
6	Silová část / Power part / Netzteil	25.4.2016
7	Připojení pohonů / Drivings connection / Antriebsanschlub	25.4.2016
8	Pohon pilového pásu / Saw belt drive / Saw Riemenantrieb	25.4.2016
9	Propojení napájecích obvodů / Feeding circuits / Stromversorgungsgebiede	25.4.2016
10	Stýkače / Contactors / Schütze	22.4.2016
11	Signály spouštěčů, klávesnice / Signal of shields, keyboard / Schaltersignal, Tastatursignal	22.4.2016
12	Hydraulika / Hydraulics / Hydraulik	22.4.2016
13	Signály koncových spínačů / Signals of limit switches / signale der Endschalter	25.4.2016
14	Připojení modulů / Modules connection / Anschluss der Moduln	25.4.2016
15	Bezpečnostní obvod / Safety circuit / Sicherheitsschaltung	25.4.2016
16	Příslušenství / Accessories / Zubehör	25.4.2016
17	Signalizace LED diod	22.4.2016
18	Description of the LED diodes signalization	22.4.2016
19	LED Standanzeige	22.4.2016

Kusovník artiklů / Parts list / Stückliste

Označení přístroje Device identification Geräteidentifikation	Typ přístroje Device description Gerätebeschreibung	Objednací číslo Type number Typennummer	Výrobce Manufacturer Hersteller	Skladové číslo Part number Lagernummer	Množství Quantity Menge	Umístění Location Stelle
-BM1	Bezpečnostní relé 24VDC, 3NO Safety relay 24VDC, 3NO Sicherheitsrelais 24VDC, 3NO	BT50	ABB	91.051.063	1	/15.145
-FA1	Motorový spouštěč - 0.4A Motor starter - 0.4A Motorstarter - 0.4A	MS116-0,4	ABB	91.045.017	1	/7.62
-FA1	Pomocné kontakty - 1xNO+1xNC Auxiliary contacts - 1xNO+1xNC Hilfskontakte - 1xNO+1xNC	HKF1-11	ABB	91.046.002	1	/7.62
-FA2	Motorový spouštěč - 1A Motor starter - 1A Motorstarter - 1A	MS116-1,00	ABB	91.045.019	1	/7.64
-FA2	Pomocné kontakty - 1xNO+1xNC Auxiliary contacts - 1xNO+1xNC Hilfskontakte - 1xNO+1xNC	HKF1-11	ABB	91.046.002	1	/7.64
-FA3	Motorový spouštěč - 4A Motor starter - 4A Motorstarter - 4A	MS116-4,0	ABB	91.045.022	1	/7.67
-FA3	Pomocné kontakty - 1xNO+1xNC Auxiliary contacts - 1xNO+1xNC Hilfskontakte - 1xNO+1xNC	HKF1-11	ABB	91.046.002	1	/7.67
-KM1	Ministýkač 4kW/400V Minicontactor 4kW/400V Minischutz 4kW/400V	B6S-30-01-1.7-71	ABB	91.040.049	1	/10.93
-KM2	Ministýkač 4kW/400V Minicontactor 4kW/400V Minischutz 4kW/400V	B6S-30-01-1.7-71	ABB	91.040.049	1	/10.94
-KM3	Ministýkač 4kW/400V Minicontactor 4kW/400V Minischutz 4kW/400V	B6S-30-01-1.7-71	ABB	91.040.049	1	/10.96
-KM11	Ministýkač 4kW/400V Minicontactor 4kW/400V Minischutz 4kW/400V	B6S-30-01-1.7-71	ABB	91.040.049	1	/15.147
-KM11	Pomocné kontakty - 1xNO+1xNC Auxiliary contacts - 1xNO+1xNC Hilfskontakte - 1xNO+1xNC	CAF 6-11M	ABB	91.041.042	1	/15.147

The manufacturer reserves right to use an equivalent replacement device.

Kusovník artiklů / Parts list / Stückliste

Označení přístroje Device identification Geräteidentifikation	Typ přístroje Device description Gerätebeschreibung	Objednací číslo Type number Typennummer	Výrobce Manufacturer Hersteller	Skladové číslo Part number Lagernummer	Množství Quantity Menge	Umístění Location Stelle
-KM12	Ministýkač 4kW/400V Minicontactor 4kW/400V Minischutz 4kW/400V	B6S-30-01-1.7-71	ABB	91.040.049	1	/15.148
-KM12	Pomocné kontakty - 1xNO+1xNC Auxiliary contacts - 1xNO+1xNC Hilfskontakte - 1xNO+1xNC	CAF 6-11M	ABB	91.041.042	1	/15.148
-PA1	Pojistkový odpínač pro válcové vložky - 3P Switch fuse for the cylinder inserts - 3P Schalter Sicherung für den Zylindereinsätze - 3P	E93/32	ABB	91.241.014	1	/8.71
-PA2	Pojistkový odpojovač E-90 - 2P Fuse disconnector E-90 - 2P Sicherungstrenner E90 - 2P	E 92/32	ABB	91.241.013	1	/9.84
-QS1	3 pólový odpínač, 16A Disconnector - 3P, 16A Trenner - 3P, 16A	OT16F3	ABB	91.170.015	1	/6.50
-RE1	Patice pro relé Relay socket Relaissockel	CR-PSS	ABB	91.051.048	1	/12.119
-RE1	Paticové relé CR-P Plug-in relay CR-P Stecken Sie in Relais CR-P	CR-P024DC2	ABB	91.051.049	1	/12.119
-A1.1	Sestavený modul CPU2-E (UNIVERZALNI) Assembled module CPU2-E (UNIVERSAL) Montiert Modul CPU2-E (UNIVERSAL)	CPU2-E	Bomar	266.222	1	/14.136
-A3.1	Sestavený modul JDI-2/2 Assembled module JDI-2/2 náhrada za 91.995.039	JDI-2/2	Bomar	266.216	1	/14.133
-A5.1	Sestavený modul JDO-2/0 (plně osazený) Assembled module JDO-2/0 (fully manned) náhrada za 91.995.040	JDO-2/0	Bomar	266.224	1	/14.130
-DKL	Sestavený modul DKL-F5 (display) Assembled module DKL-F5 (display) náhrada za 91.995.048	DKL-F5	Bomar	266.219	1	/14.138
-DM1	Výrobek-deska OCHRANA3 Product-board OCHRANA3 Produkt-board OCHRANA 3	OCHR3	Bomar	266.255	1	/9.83

The manufacturer reserves right to use an equivalent replacement device.

3

BOMAR, s.r.o.
Těžební 1236/1
CZ 627 00, Brno

Stroj/Machine/Maschine: Ergonomic 290.250 GAC FM

Název stránky/Name page/Name seiten: Kusovník artiklů / Parts list / Artikelstückliste

Číslo dok./Doc./No/Anzahl der Dokumente.:	ES-2300F-201/202-V1.1	List/Page/Seite: 3.a
Napájení/Power supply/Einspeisung:	3x400V + PE / 50Hz	
Zpracoval/Processed /Hat verarbeitet:	Ing.Kostka	Listů/Pages/Seiten: 23
Datum/Date/Datum:	20.5.2016	

Kusovník artiklů / Parts list / Stückliste

Označení přístroje Device identification Geräteidentifikation	Typ přístroje Device description Gerätebeschreibung	Objednací číslo Type number Typennummer	Výrobce Manufacturer Hersteller	Skladové číslo Part number Lagernummer	Množství Quantity Menge	Umístění Location Stelle
-FM1	Frekvenční měnič - 1.5kW, 3x400VAC Frequency converter - 1.5kW, 3x400VAC Frequenzumrichter - 1,5kW, 3x400VAC	VFD015EL43A	DELTA ELECTRONICS, INC.	91.012.122	1	/8.71
-FU1	Pojistka trubičková - 1A/250V, pomalá, 5x20 Tube fuse - 1A/250V, slow, 5x20 Rohrsicherung - 1A / 250V, langsam, 5x20	T1A/250V	ESKA	91.230.031	1	/9.85
-FU2	Pojistka trubičková - 6,3A/250V, pomalá, 5x20 Tube fuse - 6,3A/250V, slow, 5x20 Rohrsicherung - T6,3A / 250V, langsam, 5x20	T6,3A/250V	ESKA	91.230.002	1	/9.84
-RP1	Potenciometr 4k7 Potenciometer 4k7 Potentiometer 4k7	TP195 4k7/N20A	Elektronické součástky CZ, a.s	91.283.015	1	/8.75
-RP1	Hlavice potenciometru - 24mm Head of potentiometer 24mm Leiter Potentiometer 24mm	S8877 BLK	GES-ELECTRONICS, a.s.	91.060.063	1	/8.75
-SB500	Total stop - hlavice + 3xNC Emergency-stop mushroom push - button + 3xNC Not-Aus-Pilz - Taster + 3 xNC	YW1B-V4E02R	IDEC	91.060.084	1	/15.144
-SB500	Kontakt - 1x NO Contact - 1x NO Kontakt - 1x NO	YW-E10	IDEC	91.061.044	1	/15.144
-RCF1	Filtr RFC vývodový Efferent RFC filter Ableitenden RFC Filter	FBOPR1624	Ing. Miroslav Vlček	91.041.015	1	/7.61
-RCF2	Filtr RFC vývodový Efferent RFC filter Ableitenden RFC Filter	FBOPR1624	Ing. Miroslav Vlček	91.041.015	1	/7.63
-RCF3	Filtr RFC vývodový Efferent RFC filter Ableitenden RFC Filter	FBOPR1624	Ing. Miroslav Vlček	91.041.015	1	/7.66
-RCF11	Filtr RFC vývodový Efferent RFC filter Ableitenden RFC Filter	FBOPR1624	Ing. Miroslav Vlček	91.041.015	1	/6.56
-RCF12	Filtr RFC vývodový Efferent RFC filter Ableitenden RFC Filter	FBOPR1624	Ing. Miroslav Vlček	91.041.015	1	/6.57

The manufacturer reserves right to use an equivalent replacement device.

3.a

BOMAR, s.r.o.
Těžební 1236/1
CZ 627 00, Brno

Stroj/Machine/Maschine: Ergonomic 290.250 GAC FM

Název stránky/Name page/Name seiten: Kusovník artiklů / Parts list / Artikelstückliste

Číslo dok./Doc.No/Anzahl der Dokumente.:	ES-2300F-201/202-V1.1	List/Page/Seite:	3.b
Napájení/Power supply/Einspeinsung:	3x400V + PE / 50Hz		
Zpracoval/Processed /Hat verarbeitet:	Ing.Kostka	Listů/Pages/Seiten:	23
Datum/Date/Datum:	20.5.2016		

Kusovník artiklů / Parts list / Stückliste

Označení přístroje Device identification Geräteidentifikation	Typ přístroje Device description Gerätebeschreibung	Objednací číslo Type number Typennummer	Výrobce Manufacturer Hersteller	Skladové číslo Part number Lagernummer	Množství Quantity Menge	Umístění Location Stelle
-SQ21	Bezpečnostní koncový spínač - 2xNC Safety Limit Switch - 2x NC Sicherheitsendschalter - 2x NC	QKS8	KEDU	91.173.012	1	/15.144
-SQ22	Bezpečnostní koncový spínač - 2xNC Safety Limit Switch - 2x NC Sicherheitsendschalter - 2x NC	QKS8	KEDU	91.173.012	1	/15.142
-PA1	Pojistka válcová - 6A, 10x38, rychlá Tube fuse - 6A, 10x38, fast Rohrsicherung - 6A, 10x38, schnell	PV10 6A gG	OEZ	91.231.002	3	/8.71
-PA2	Pojistka válcová - 1A, 10x38, pomalá Tube fuse - 1A, 10x38, slow Rohrsicherung - 1A, 10x38, langsam	PV10 1A aM	OEZ	91.231.001	2	/9.84
-SA1	SPÍNAČ ČERNÝ 3 polohy - Harmony Switch black 3 positions - Harmony Schalter schwarz 3 Positionen - Harmony	ZB5-AD3	TELEMECANIQUE	91.060.024	1	/11.104
-SA2	SPÍNAČ ČERNÝ 3 polohy - Harmony Switch black 3 positions - Harmony Schalter schwarz 3 Positionen - Harmony	ZB5-AD3	TELEMECANIQUE	91.060.024	1	/11.107
-SB1	hlavice zelená prosvětlená - Harmony Head green backlit - Harmony Kopf grün Hintergrundbeleuchtung - Harmony	ZB5AW33	TELEMECANIQUE	91.060.019	1	/11.105
-SB2	Hlavice tlačítka černá Button black head Taste Mitesser	ZB5AA2	TELEMECANIQUE	91.060.013	1	/11.106
-SB501	Hlavice prosvětleného tlačítka žlutá The button head backlit yellow Der Knopf Kopf von hinten beleuchtet gelb	ZB5AW35	TELEMECANIQUE	91.060.023	1	/15.146
-RCF0	Vstupní odrušovací filtr 16A Input noise filter 16A Eingangsrauschfilter 16A	16EB15/50	WIDECOM TECHNOLOGY s.r.o.	91.041.062	1	/6.51
-FU1	Svorka pojistková Fuse terminal Sicherungsklemme	WK4/THSI5U	WIELAND	91.251.102	1	/9.85

The manufacturer reserves right to use an equivalent replacement device.

3.b

Kusovník artiklů / Parts list / Stückliste

Označení přístroje Device identification Geräteidentifikation	Typ přístroje Device description Gerätebeschreibung	Objednací číslo Type number Typennummer	Výrobce Manufacturer Hersteller	Skladové číslo Part number Lagernummer	Množství Quantity Menge	Umístění Location Stelle
-FU2	Svorka pojistková Fuse terminal Sicherungsklemme	WK4/THSI5U	WIELAND	91.251.102	1	/9.84

The manufacturer reserves right to use an equivalent replacement device.

3.c

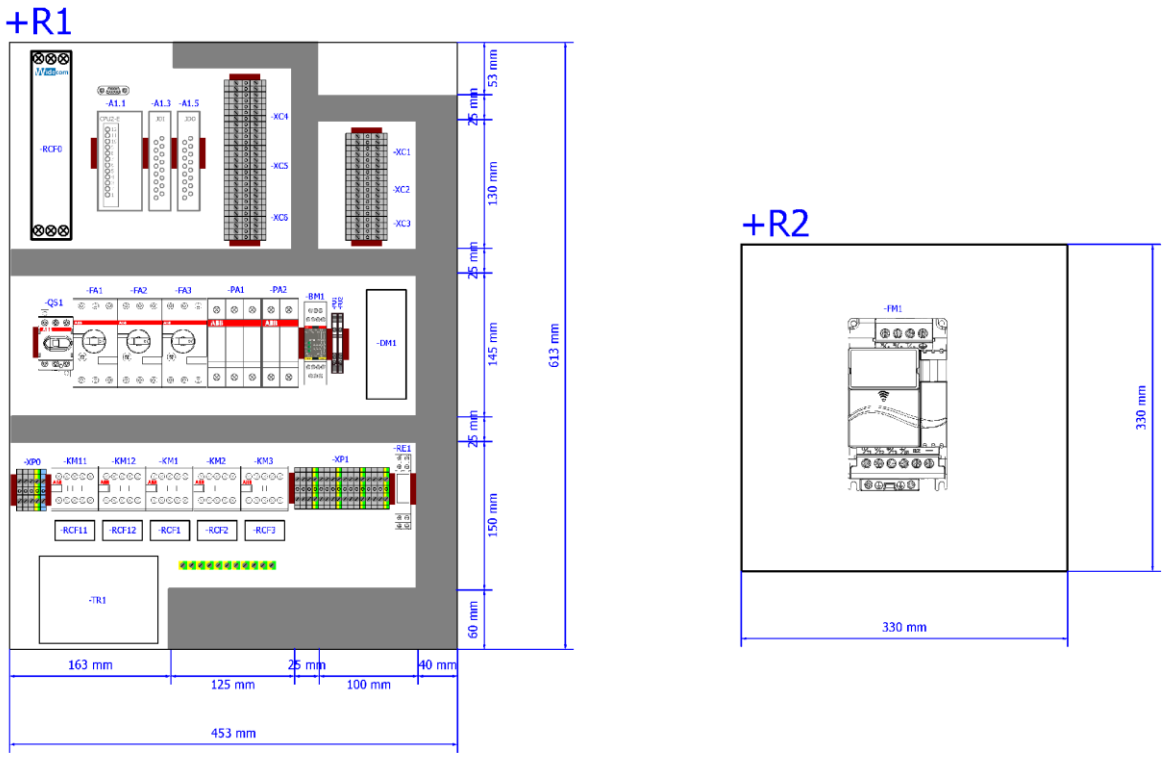

3.d

BOMAR, s.r.o. Těžební 1236/1 CZ 627 00, Brno	Stroj/Machine/Maschine: Ergonomic 290.250 GAC FM	Název stránky/Name page/Name seiten: Rozmístění prvků v rozvaděči R1, R2 / Placement of elements in enclosure R1, R2 / Platzierung der Elemente im Schaltschrank R1, R2	Číslo dok./Doc./No/Anzahl der Dokumente.:	ES-2300F-201/202-V1.1	List/Page/Seite: 4
			Napájení/Power supply/Einspeisung:	3x400V + PE / 50Hz	Listů/Pages/Seiten: 23
			Zpracoval/Processed /Hat verarbeitet:	Ing.Kostka	
			Datum/Date/Datum:	25.4.2016	

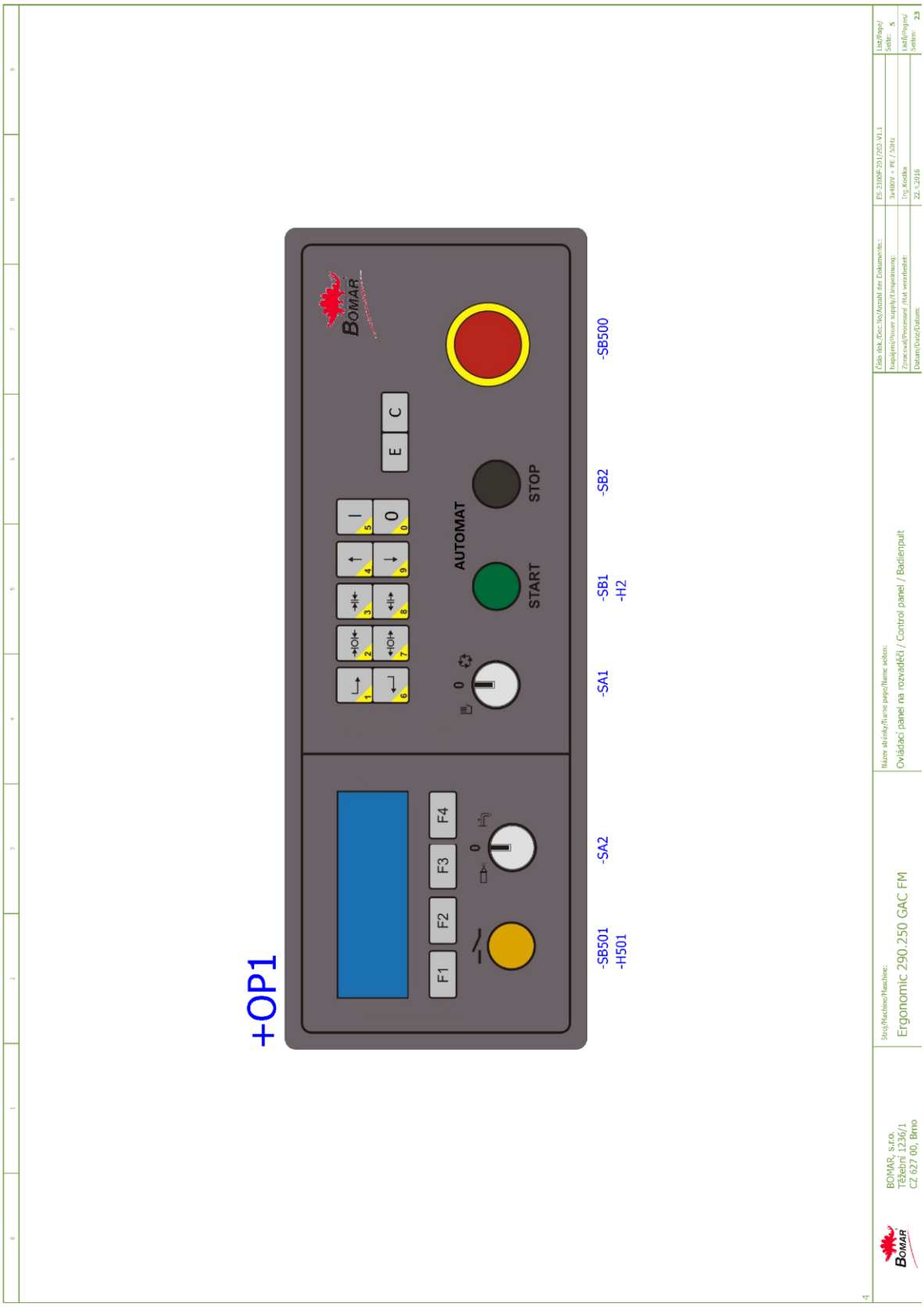
+OP1
F1
F2
F3
F4
-SB501
-H501
-SA2
-SA1
AUTOMAT
START
STOP
-SB1
-H2
-SB2
-SB500
E
C
BOMAR
Číslo dok./Doc.No/Anzahl der Dokumente: :
ES-2300F-201/202-V1.1
List/Page/
Seite: 5
Napájení/Power supply/Einspeisung:
3x400V + PE / 50Hz
Zpracoval/Processed /Hat verarbeitet:
Ing.Kocka
List8/Pages/
Seiten: 23
Datum/Date/Datum:
22.4.2016
Název stránky/Name page/Name seiten:
Ovládací panel na rozvaděči / Control panel / Badienpult
Stroj/Machine/Maschine:
Ergonomic 290.250 GAC FM
BOMAR, s.r.o.
Těšební 1236/1
CZ 627 00, Brno

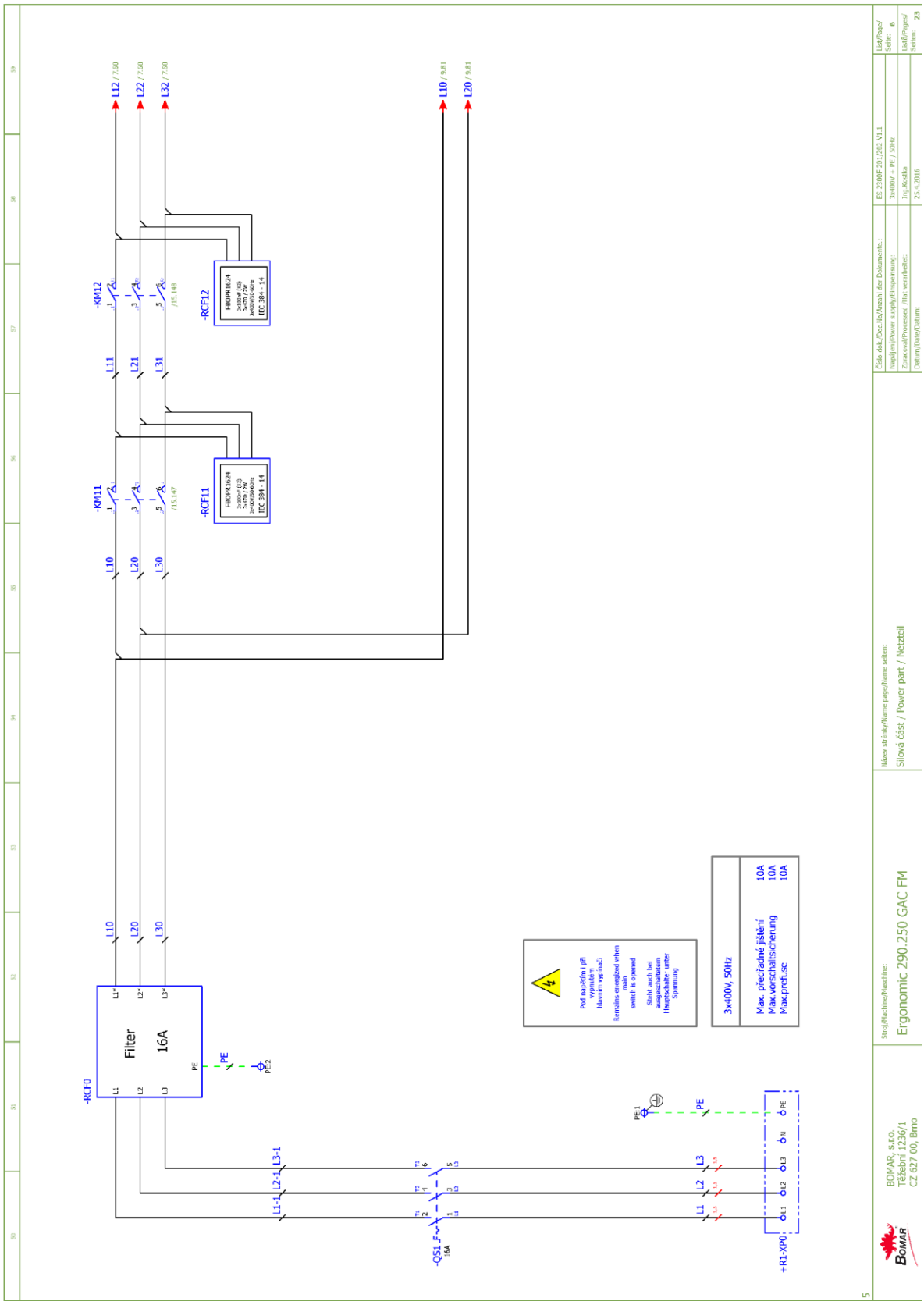

Schémata
Schemas
Schematics

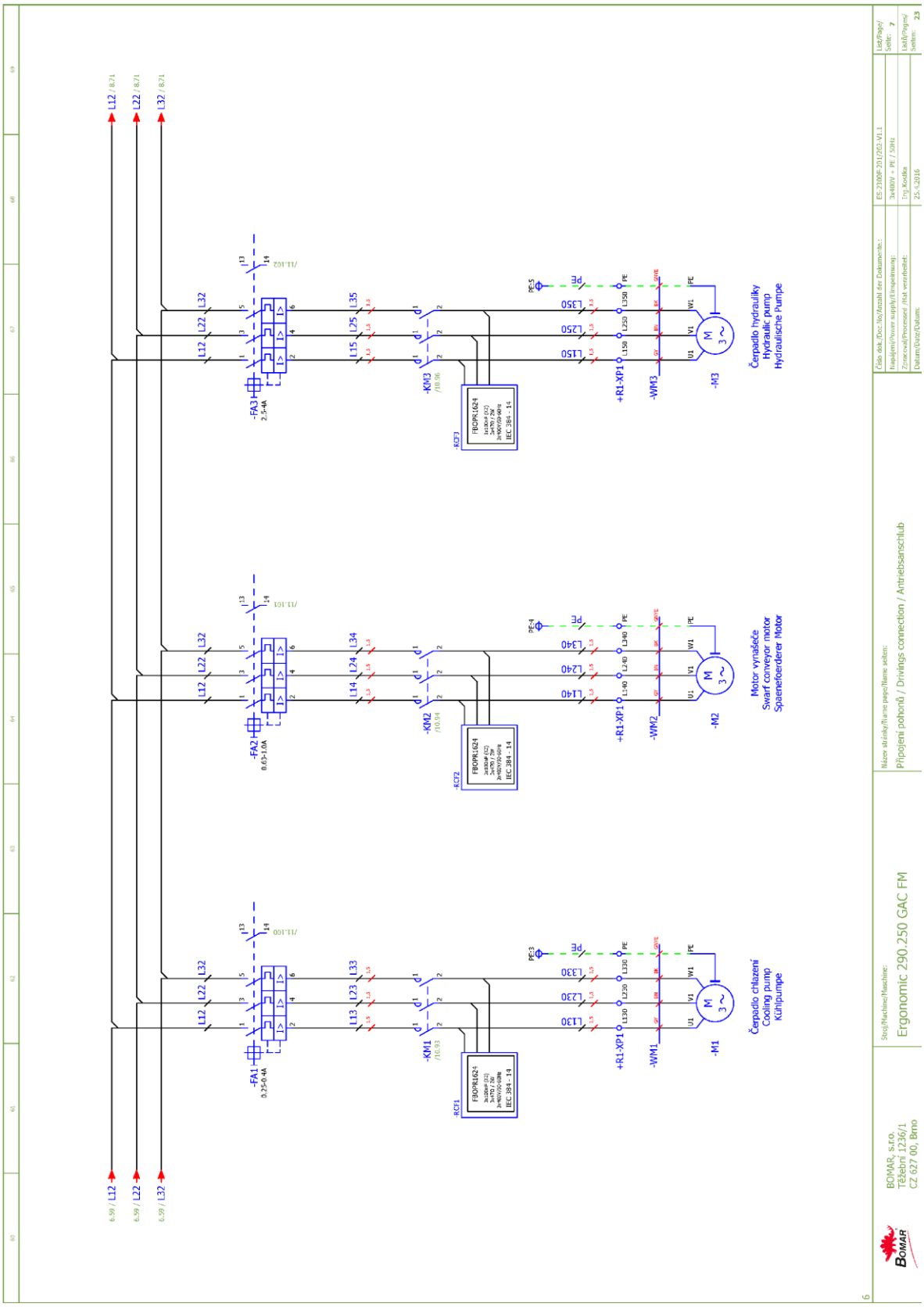
Čerpadlo chlazení
Cooling pump
Kühlpumpe
Motor vynašeče
Swarf conveyor motor
Spaneförderer Motor
Čerpadlo hydrauliky
Hydraulic pump
Hydraulische Pumpe
Stroj/Machine/Maschine:
Ergonomic 290.250 GAC FM
BOMAR, s.r.o.
Těšební 1236/1
CZ 627 00, Brno

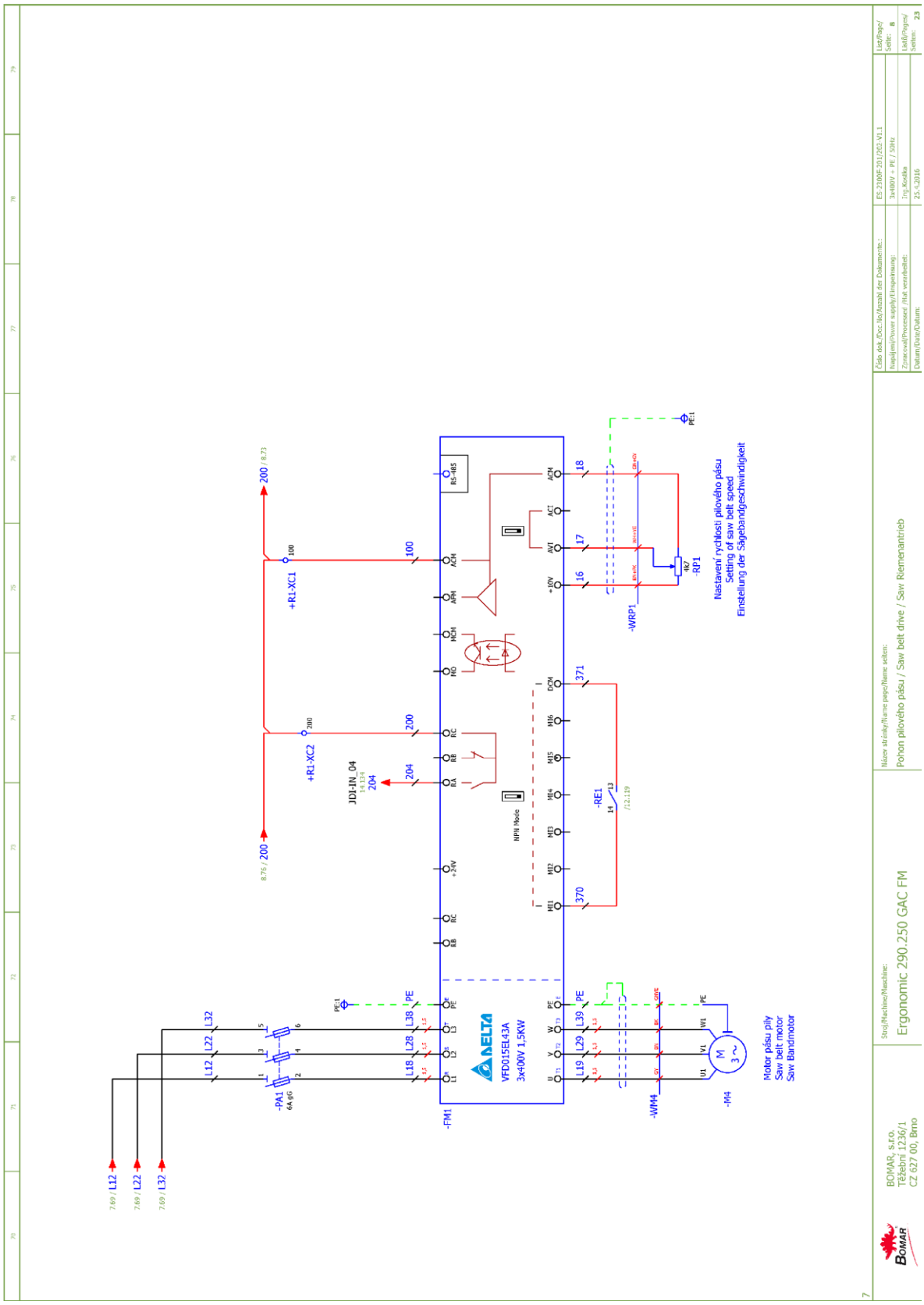
7.69 / L12
7.69 / L22
7.69 / L32
-PA1
6A gG
L12
L22
L32
L18
L28
L38
PE
-FM1
VFD015EL43A
3x400V 1.5KW
DELTA
RS-485
NPN Mode
JDI-IN_04
204
+R1-XC1
+R1-XC2
100
200
8.76 / 200
8.73
-RE1
/12.L19
370
371
-WRP1
-RP1
4k7
Nastavení rychlosti pilového pásu
Setting of saw belt speed
Einstellung der Sägebandgeschwindigkeit
-WM4
-M4
M
3 ~
Motor pásu pily
Saw belt motor
Saw Bandmotor
BOMAR, s.r.o.
Těšeňní 1236/1
CZ 627 00, Brno
Stroj/Machine/Maschine:
Ergonomic 290.250 GAC FM
Název stránky/Name page/Name seiten:
Pohon pilového pásu / Saw belt drive / Saw Riemenantrieb
ES 2300F-201/202-V1.1
3x400V + PE / 50Hz
Ing. Kodka
25.4.2016
List/Page/Seite: 8
List/Pages/Seiten: 23

Schémata
Schemas
Schematics

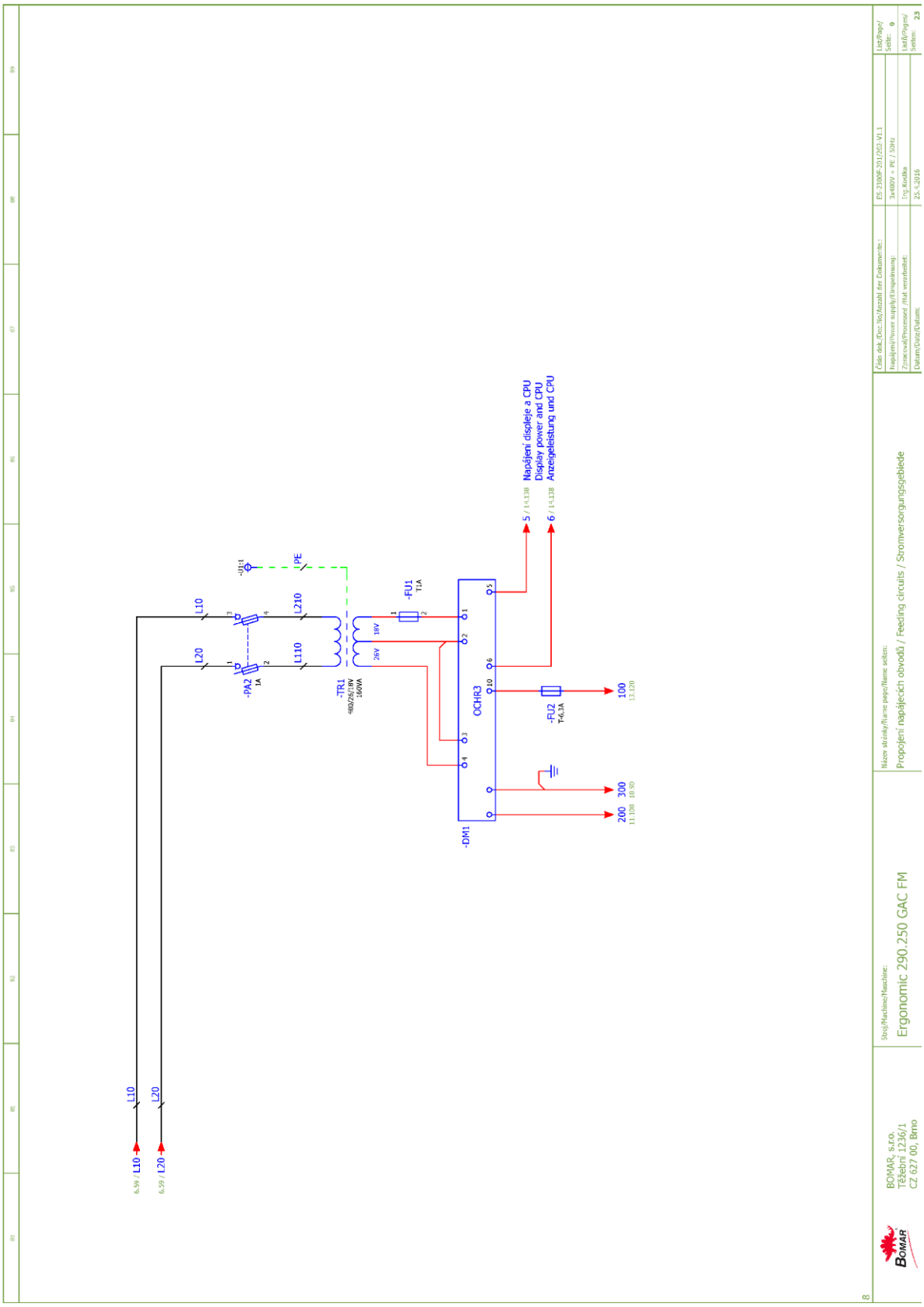

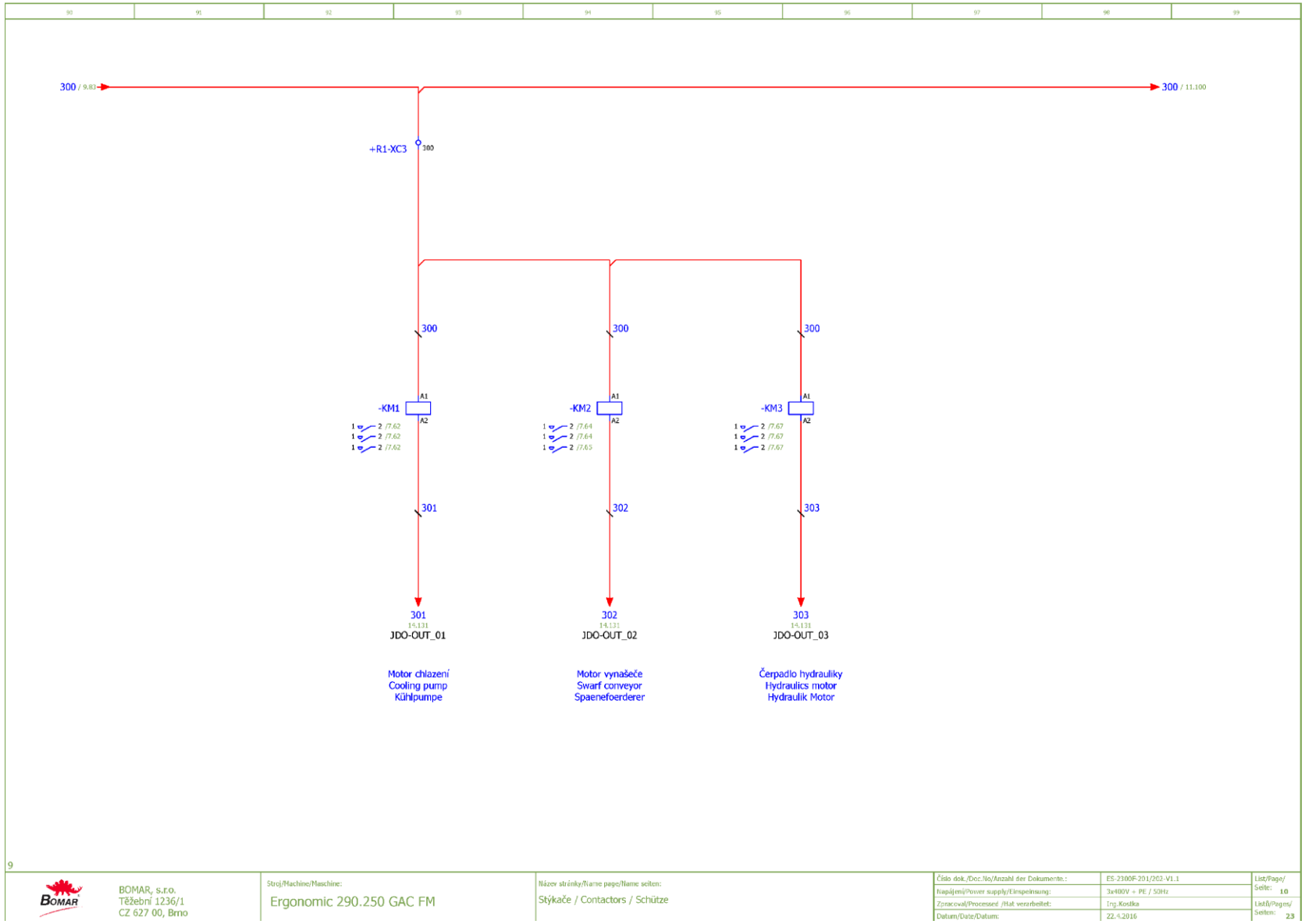
300 / 9.82
300 / 11.100
+R1-XC3
300
-KM1
-KM2
-KM3
A1
A2
301
302
303
JDO-OUT_01
JDO-OUT_02
JDO-OUT_03
Motor chlazení
Cooling pump
Kühlpumpe
Motor vynašeče
Swarf conveyor
Spaenefoerderer
Čerpadlo hydrauliky
Hydraulics motor
Hydraulik Motor
BOMAR, s.r.o.
Těžební 1236/1
CZ 627 00, Brno
Stroj/Machine/Maschine:
Ergonomic 290.250 GAC FM
Název stránky/Name page/Name seiten:
Stýkače / Contactors / Schütze
Číslo dok./Doc./No/Anzahl der Dokumente.:
ES-2300F-201/202-V1.1
Napájení/Power supply/Einspeinsung:
3x400V + PE / 50Hz
Zpracoval/Processed /Hat verarbeitet:
Ing.Kostka
Datum/Date/Datum:
22.4.2016
List/Page/Seite:
10
Listů/Pages/Seiten:
23

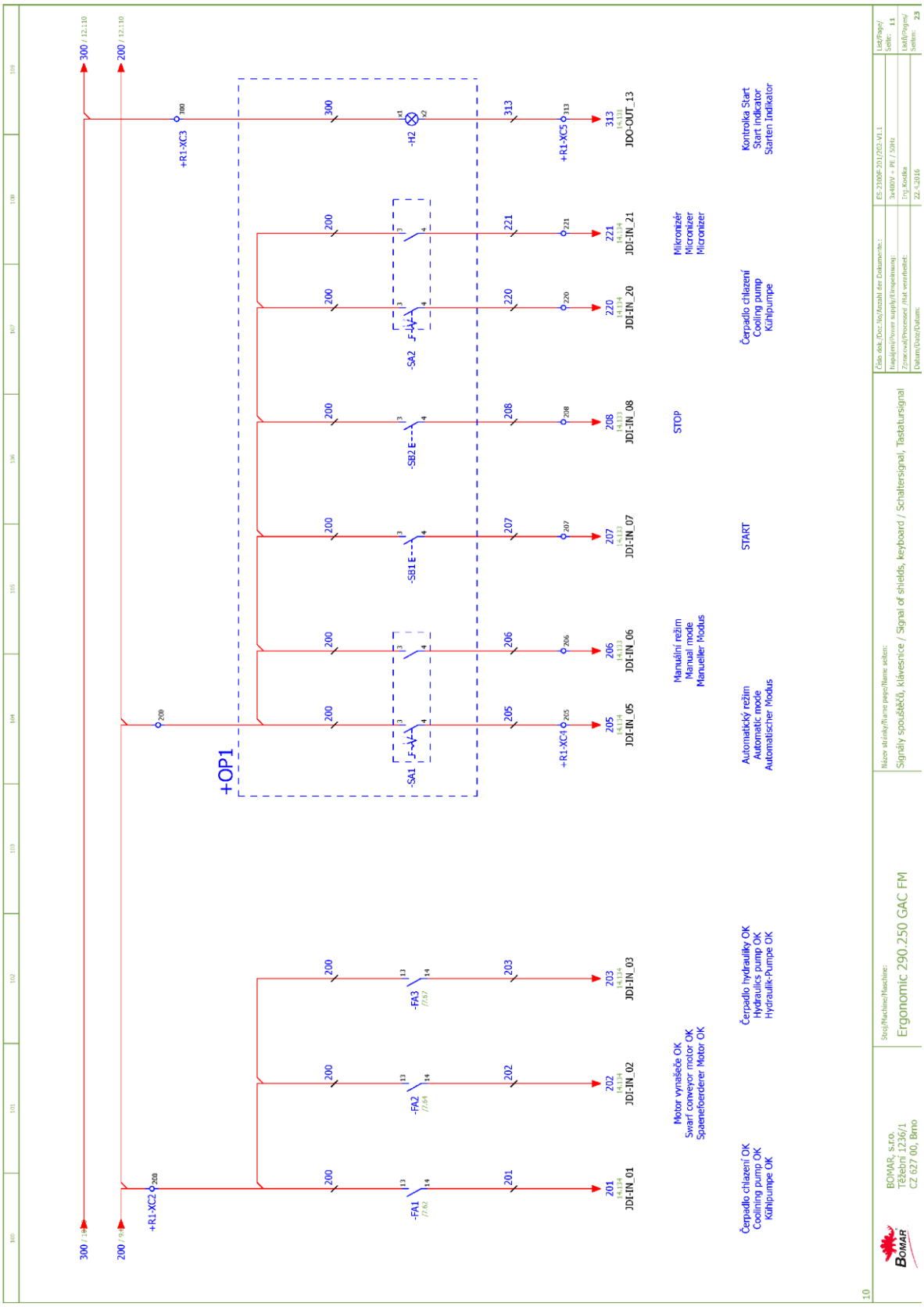
+OP1
+R1-XC2
+R1-XC3
+R1-XC4
+R1-XC5
-FA1
-FA2
-FA3
-SA1
-SB1
-SB2
-SA2
-H2
JDI-IN_01
JDI-IN_02
JDI-IN_03
JDI-IN_05
JDI-IN_06
JDI-IN_07
JDI-IN_08
JDI-IN_20
JDI-IN_21
JDO-OUT_13
Čerpadlo chlazení OK
Cooling pump OK
Kühlpumpe OK
Motor vynašeče OK
Swarf conveyor motor OK
Spaeneförderer Motor OK
Čerpadlo hydrauliky OK
Hydraulics pump OK
Hydraulik-Pumpe OK
Automatický režim
Automatic mode
Automatischer Modus
Manuální režim
Manual mode
Manueller Modus
START
STOP
Čerpadlo chlazení
Cooling pump
Kühlpumpe
Mikronizér
Micronizer
Micronizer
Kontrolka Start
Start indicator
Starten Indikator
BOMAR, s.r.o.
Těšínská 1236/1
CZ 627 00, Brno
Stroj/Machine/Maschine:
Ergonomic 290.250 GAC FM
Název stránky/Name page/Name seiten:
Signály spouštěčů, klávesnice / Signal of shields, keyboard / Schaltersignal, Tastatursignal
ES-2300F-201/202-V1.1
3x400V + PE / 50Hz
Trg.Kosika
22.4.2016

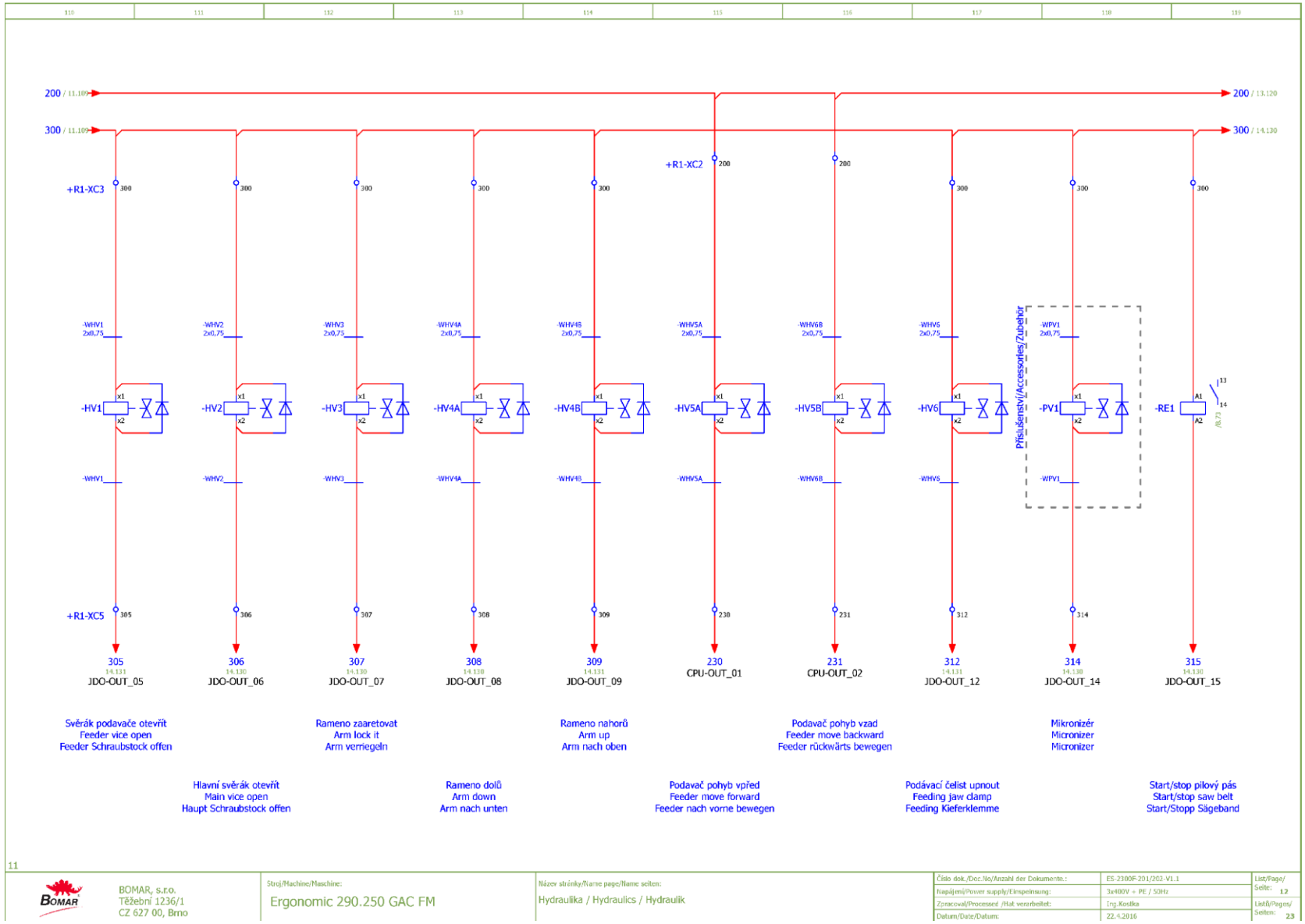

Schémata
Schemas
Schematics

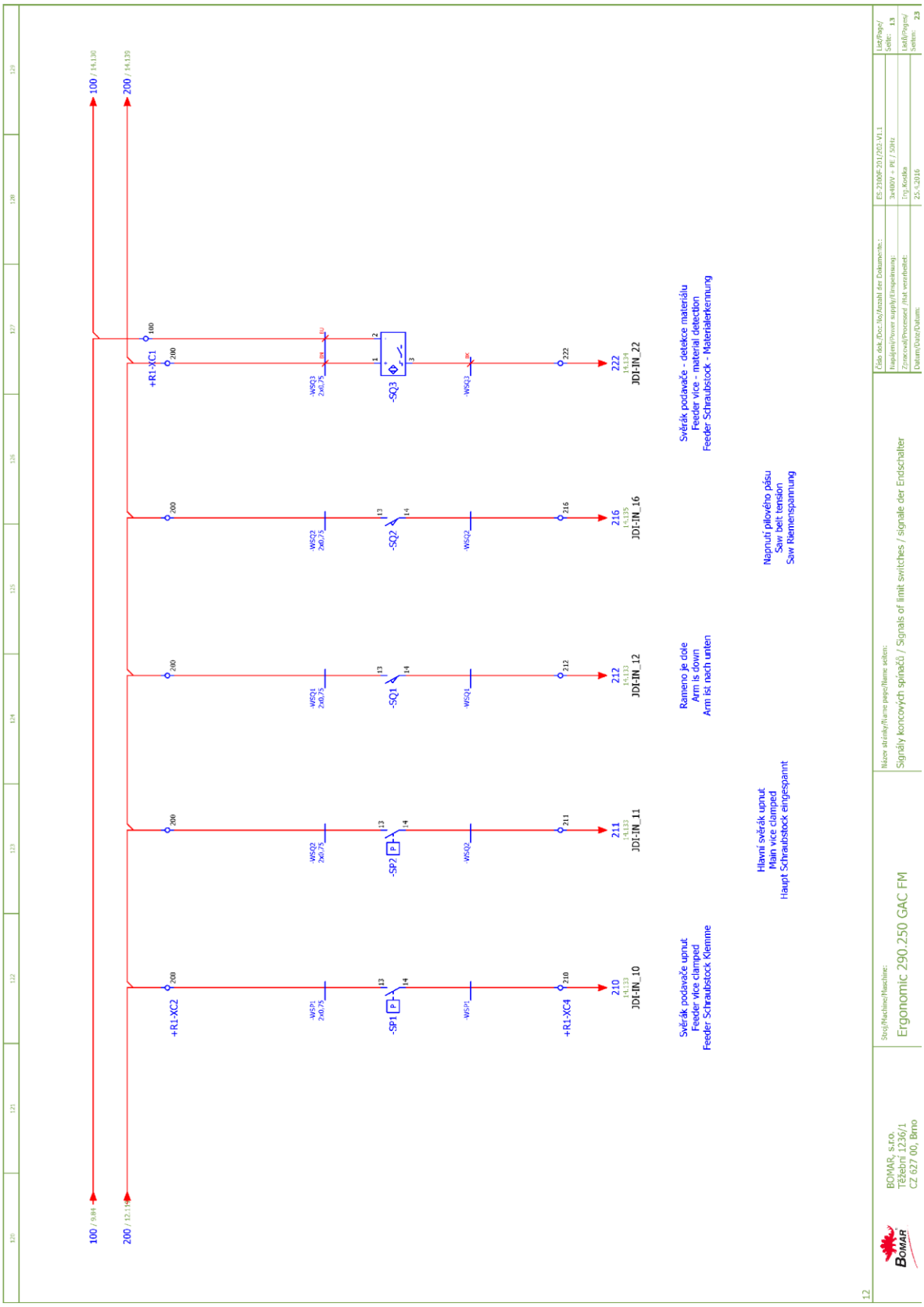
100 / 14.130
200 / 14.139
+R1-XC1
+R1-XC2
+R1-XC4
-WSQ3 2x0,75
-WSQ2 2x0,75
-WSQ1 2x0,75
-WSP2 2x0,75
-WSP1 2x0,75
-SQ3
-SQ2
-SQ1
-SP2
-SP1
-WSQ3
-WSQ2
-WSQ1
-WSP2
-WSP1
222 14.134 JDI-IN_22
216 14.135 JDI-IN_16
212 14.133 JDI-IN_12
211 14.133 JDI-IN_11
210 14.133 JDI-IN_10
Svěrák podavače - detekce materiálu
Feeder vice - material detection
Feeder Schraubstock - Materialerkennung
Napnutí pilového pásu
Saw belt tension
Saw Riemenspannung
Rameno je dole
Arm is down
Arm ist nach unten
Hlavní svěrák upnut
Main vice clamped
Haupt Schraubstock eingespannt
Svěrák podavače upnut
Feeder vice clamped
Feeder Schraubstock Klemme
BOMAR, s.r.o.
Těšební 1236/1
CZ 627 00, Brno
Stroj/Machine/Maschine:
Ergonomic 290.250 GAC FM
Název stránky/Name page/Name seiten:
Signály koncových spínačů / Signals of limit switches / signale der Endschalter
ES-2300F-201/202-V1.1
3x400V + PE / 50Hz
Ing.Kostka
25.4.2016
List/Page/Seite: 13
List/Pages/Seiten: 23

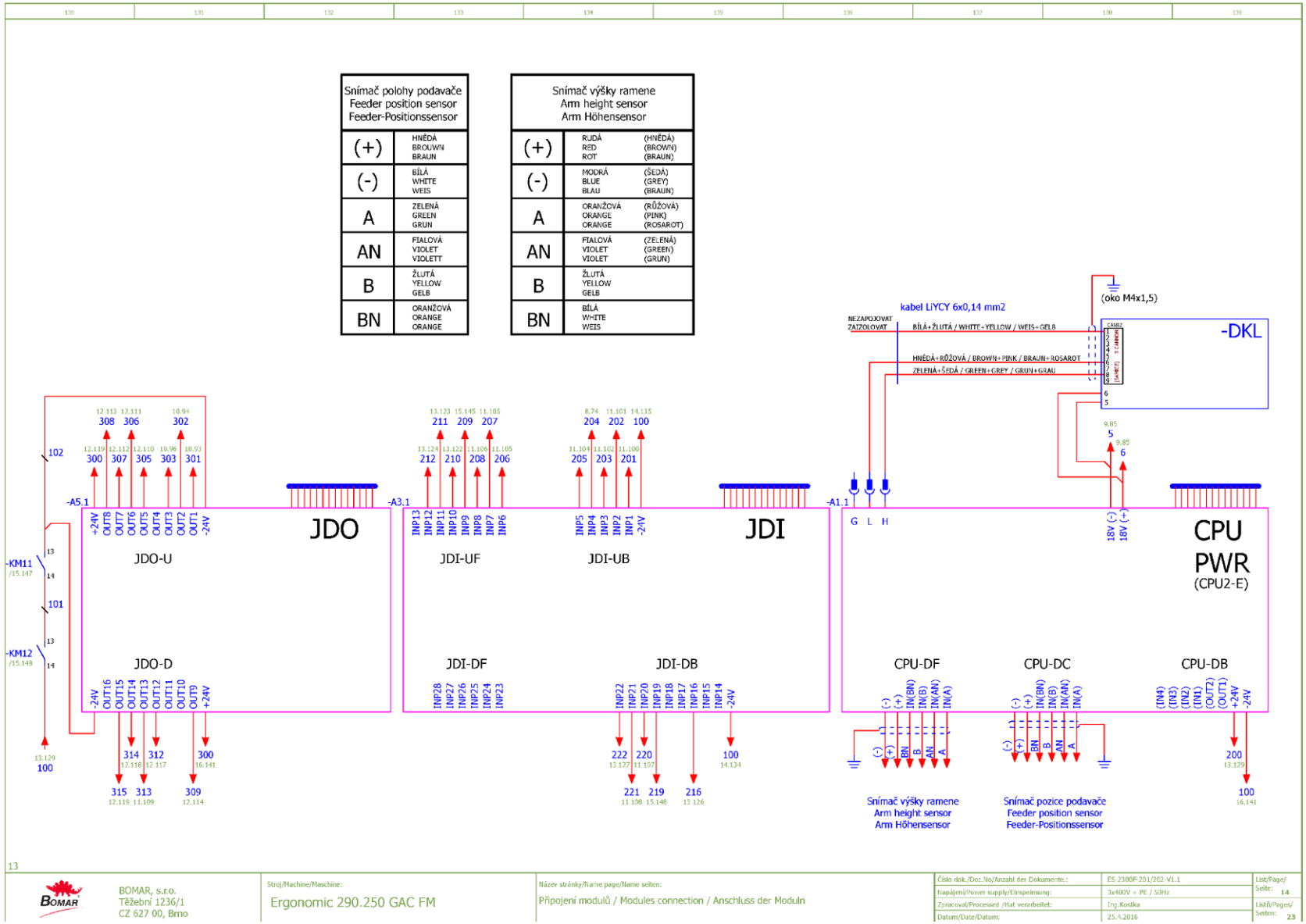
Snímač polohy podavače
Feeder position sensor
Feeder-Positionssensor
(+) HNĚDÁ BROUWN BRAUN
(-) BÍLÁ WHITE WEIS
A ZELENÁ GREEN GRUN
AN FIALOVÁ VIOLET VIOLETT
B ŽLUTÁ YELLOW GELB
BN ORANŽOVÁ ORANGE ORANGE
Snímač výšky ramene
Arm height sensor
Arm Höhensensor
(+) RUDÁ RED ROT (HNĚDÁ) (BROWN) (BRAUN)
(-) MODRÁ BLUE BLAU (ŠEDÁ) (GREY) (BRAUN)
A ORANŽOVÁ ORANGE ORANGE (RŮŽOVÁ) (PINK) (ROSAROT)
AN FIALOVÁ VIOLET VIOLET (ZELENÁ) (GREEN) (GRUN)
B ŽLUTÁ YELLOW GELB
BN BÍLÁ WHITE WEIS
kabel LiYCY 6x0,14 mm2
NEZAPOJOVAT ZATZOLOVAT
BÍLÁ+ŽLUTÁ / WHITE+YELLOW / WEIS+GELB
HNĚDÁ+RŮŽOVÁ / BROWN+PINK / BRAUN+ROSAROT
ZELENÁ+ŠEDÁ / GREEN+GREY / GRUN+GRAU
(oko M4x1,5)
-DKL
JDO
JDI
CPU PWR
(CPU2-E)
-A5.1
-A3.1
-A1.1
JDO-U
JDO-D
JDI-UF
JDI-UB
JDI-DF
JDI-DB
CPU-DF
CPU-DC
CPU-DB
-KM11
-KM12
Snímač výšky ramene
Arm height sensor
Arm Höhensensor
Snímač pozice podavače
Feeder position sensor
Feeder-Positionssensor
BOMAR, s.r.o.
Těžební 1236/1
CZ 627 00, Brno
Stroj/Machine/Maschine:
Ergonomic 290.250 GAC FM
Název stránky/Name page/Name seiten:
Připojení modulů / Modules connection / Anschluss der Moduln
Číslo dok./Doc./No/Anzahl der Dokumente.: ES-2300F-201/202-V1.1
Napájení/Power supply/Einspeisung: 3x400V + PE / 50Hz
Zpracoval/Processed /Hat verarbeitet: Ing.Kostka
Datum/Date/Datum: 25.4.2016
List/Page/Seite: 14
Listů/Pages/Seiten: 23

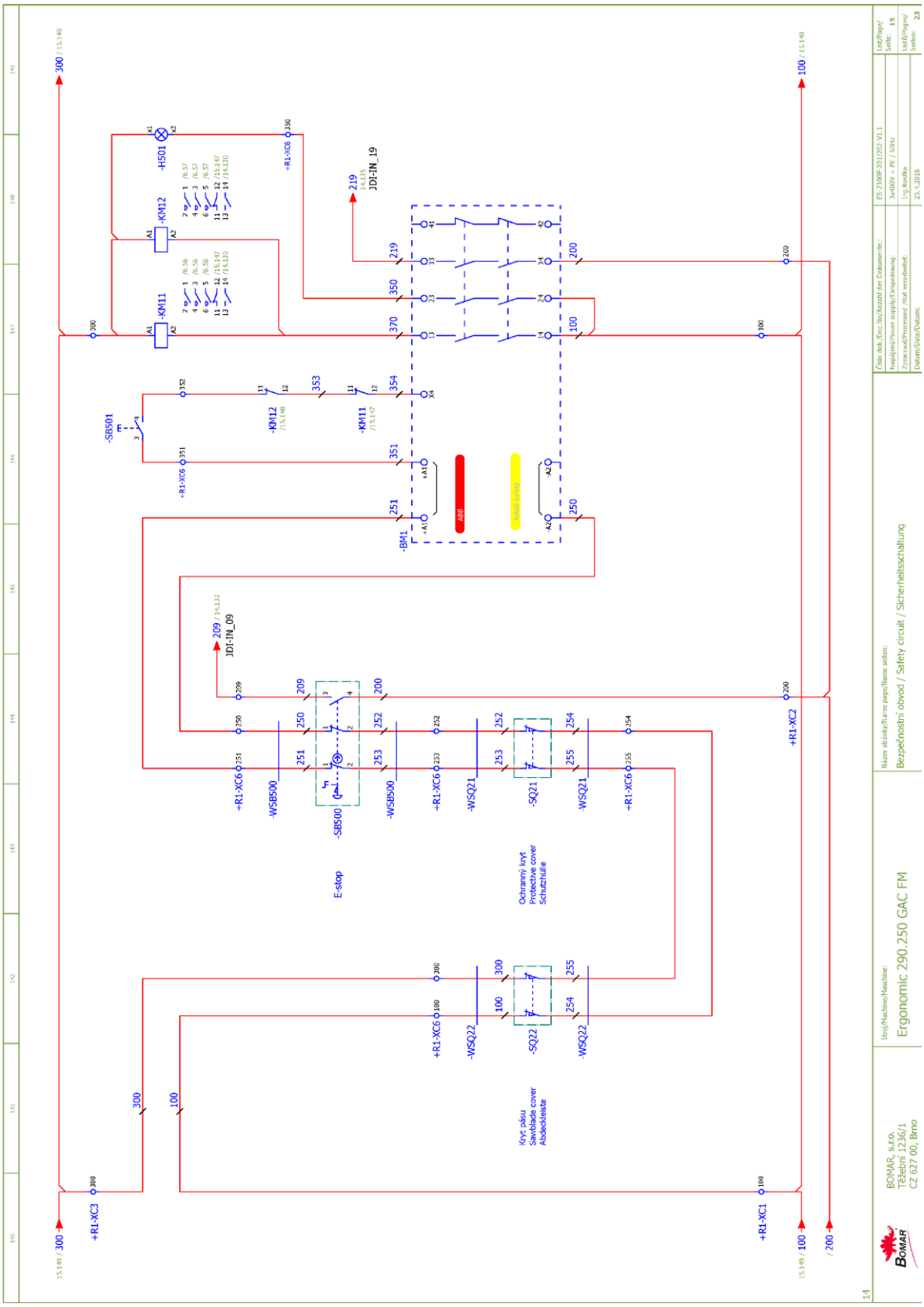
Číslo dok./Doc.No/Anzahl der Dokumente:
ES-2300F-201/202-V1.1
List/Page/Seite: 15
Napájení/Power supply/Einspeisung:
3x400V + PE / 50Hz
List8/Pages/Seiten: 23
Zpracoval/Processed/ /Hat verarbeitet:
Ing.Kocka
Datum/Date/Datum:
25.4.2016
Název stránky/Name page/Name seiten:
Bezpečnostní obvod / Safety circuit / Sicherheitsschaltung
Stroj/Machine/Maschine:
Ergonomic 290.250 GAC FM
BOMAR, s.r.o.
Těšínská 1236/1
CZ 627 00, Brno
E-stop
Ochranný kryt
Protective cover
Schutzhülle
Kryt pásu
Saviblade cover
Abdeckleiste
-HS01
-KM11
-KM12
-SB501
-SB500
-WSB500
-WSQ21
-WSQ22
-SQ21
-SQ22
-BM1
+R1-XC6
+R1-XC3
+R1-XC1
+R1-XC2
JDI-IN_19
JDI-IN_09

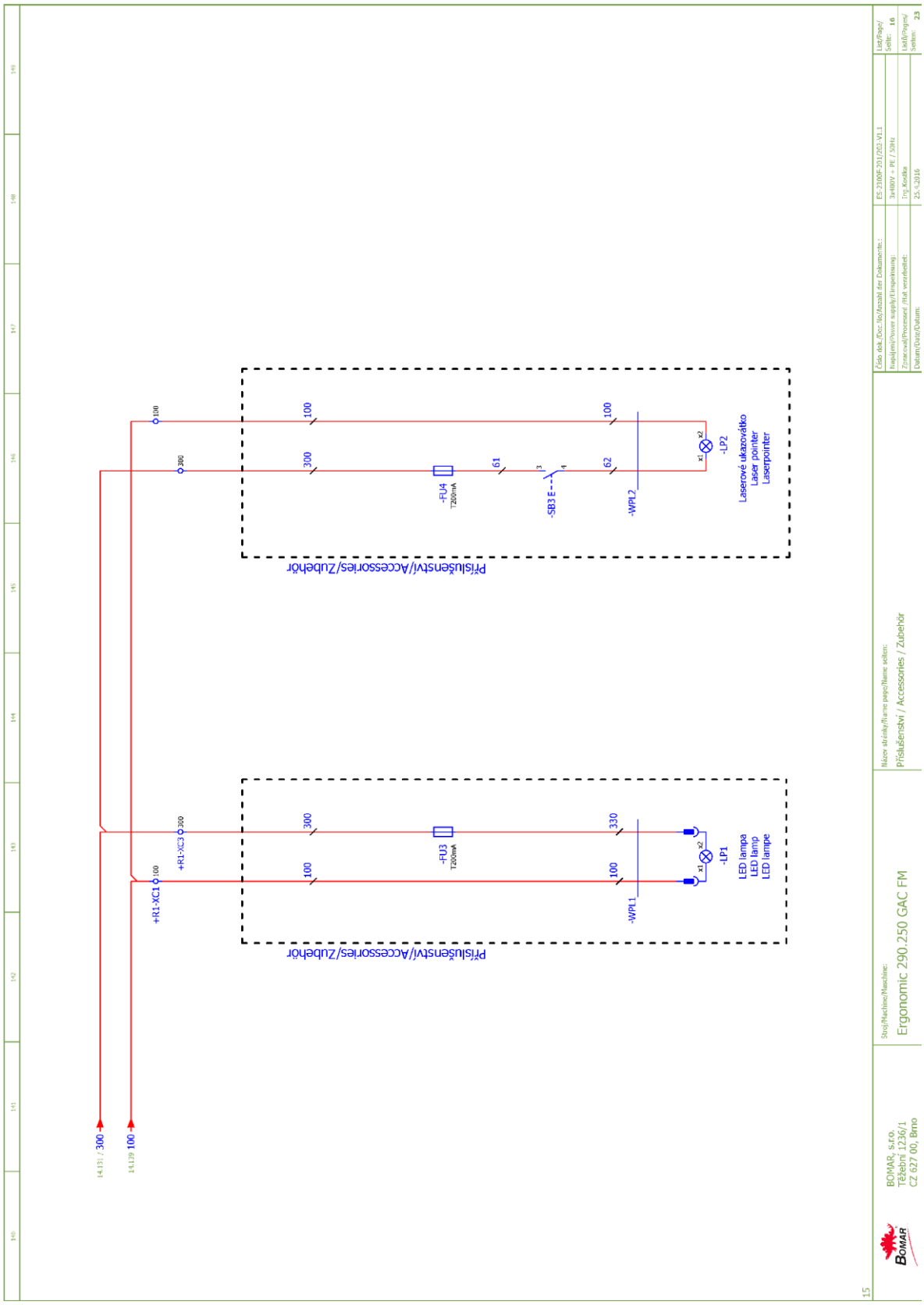
14.131 / 300
14.139 100
+R1-XC1 100
+R1-XC3 300
100
300
-FU3
T200mA
-WPL1
330
-LP1
LED lampa
LED lamp
LED lampe
Příslušenství/Accessories/Zubehör
-FU4
T200mA
61
-SB3 E
-WPL2
62
-LP2
Laserové ukazovátko
Laser pointer
Laserpointer
Číslo dok./Doc.-No./Anzahl der Dokumente:
ES 230F-201/202-V1.1
Napájení/Power supply/Einspeisung:
3x400V + PE / 50Hz
Zpracoval/Processed/ Hat verarbeitet:
Ing. Kodka
Datum/Date/Datum:
25.4.2016
List/Page/
Seite: 16
List/Pages/
Seiten: 23
Název stránky/Name page/Name seiten:
Příslušenství / Accessories / Zubehör
Stroj/Machine/Maschine:
Ergonomic 290.250 GAC FM
BOMAR, s.r.o.
Těžební 1236/1
CZ 627 00, Brno
15

	JDO - Signalizace stavu výstupů
16	
15	Spustit frekvenční měnič
14	Aktivovat mikronizér
13	Aktivovat kontrolku automatického režimu
12	Podávací čelist uplnout
11	
10	
9	Rameno nahoru
8	Rameno dolů
7	Rameno aretovat
6	Otevřít hlavní svěrák
5	Otevřít podávací věrák
4	
3	Zapnout čerpadlo hydrauliky
2	Zapnout motor vynašeče
1	Zapnout motor chlazení

	JDI - Signalizace stavu vstupů	
	Tlačítko uvolněno	Tlačítko stisknuto
16	Pás pily je napnutý	
15		
14		
13	Relé limit proudu frek. měniče sepnuto	
12	Rameno je dole	
11	Hlavní svěrák upnut	
10	Podávací svěrák upnut	
9	Total stop aktivován	
8	Stop automatického režimu	
7	Start automatického režimu	
6	Aktivováno ruční ovládání	Materiál přítomen - podávací svěrák
5	Aktivováno automatické ovládání	Aktivován mikronizér
4	Poruchové relé frekv. měniče sepnuto	Aktivován motor chlazení
3	Ochrana čerpadla hydrauliky OK	Bezpečnostní obvod OK
2	Ochrana motoru vynašeče OK	
1	Ochrana motoru chlazení OK	

	CPU - Signalizace stavu jednotky
12	Napájení 5V
11	Napájení 5V - KOM
10	Interní CAN - TXD
9	Interní CAN - RXD
8	Externí CAN - TXD
7	Externí CAN - RXD
6	
5	
4	Zadaná pozice dosažena
3	Regulace podavače aktivní
2	Podavač dozadu
1	Podavač dopředu

16

BOMAR, s.r.o.
Těžební 1236/1
CZ 627 00, Brno

Stroj/Machine/Maschine: Ergonomic 290.250 GAC FM

Název stránky/Name page/Name seiten: Signalizace LED diod

Číslo dok./Doc.No/Anzahl der Dokumente.:	ES-2300F-201/202-V1.1	List/Page/Seite: 17
Napájení/Power supply/Einspeinsung:	3x400V + PE / 50Hz	Listů/Pages/Seiten: 23
Zpracoval/Processed /Hat verarbeitet:	Ing.Kostka	
Datum/Date/Datum:	22.4.2016	

	JDO - Output state signalization
16	
15	Start up speed controller
14	Activate the microniser
13	Switch on the automatic cycle indicator
12	Vice the feeding jaw
11	
10	
9	Put the arm up
8	Put the arm down
7	Unlock the arm
6	Open the main gripper
5	Open the feeding gripper
4	
3	Turn on the hydraulic pump
2	Turn on the swarf-removal motor
1	Turn on the cooling motor

	JDI - Input state signalization	
	Button released	Button pushed
16	The sawband is tight	
15		
14		
13	Speed controller current limit relay	
12	The arm is down	
11	Main gripper is closed	
10	Feeding gripper is closed	
9	Total stop activated	
8	Automatic mode stopped	
7	Automatic mode started	
6	Manual control activated	Material is present - feeding gripper
5	Automatic control activated	Microniser activated
4	Speed controller failure relay on state	Cooling motor activated
3	Hydraulic pump protection OK	Security circuit is ON
2	Swarf-rem. motor protection is OK	
1	Cooling motor protection OK	

	CPU - unit state signalization
12	Voltage 5V
11	Voltage 5V - KOM
10	Internal CAN - TXD
9	Internal CAN - RXD
8	External CAN - TXD
7	External CAN - RXD
6	
5	
4	Desired location reached
3	Feeder regulation is active
2	Feeder to the back
1	Feeder to the front

17

BOMAR, s.r.o.
Těžební 1236/1
CZ 627 00, Brno

Stroj/Machine/Maschine: Ergonomic 290.250 GAC FM

Název stránky/Name page/Name seiten: Description of the LED diodes signalization

Číslo dok./Doc./No/Anzahl der Dokumente.:	ES-2300F-201/202-V1.1
Napájení/Power supply/Einspeinsung:	3x400V + PE / 50Hz
Zpracoval/Processed /Hat verarbeitet:	Ing.Kostka
Datum/Date/Datum:	22.4.2016

List/Page/Seite: 18
Listů/Pages/Seiten: 23

	JDO - Ausgabe - Standanzeige
16	
15	Frequenzumrichter einschalten
14	Microniser aktivieren
13	Kontrolleuchte (aut.Betrieb) aktivieren
12	Vorschubbacke spannen
11	
10	
9	Sägerahmen nach oben
8	Sägerahmen nach unten
7	Sägerahmen nicht arretieren
6	Hauptschraubstock öffnen
5	Vorschubschraubstock öffnen
4	
3	Hydraulikpumpe einschalten
2	Spänförderer einschalten
1	Kühlmittelpumpe einschalten

	JDI - Eingabe - Standanzeige	
	Taste gelöst	Taste gedrückt
16	Sägeband gespannt	
15		
14		
13	Grenzstromrelais des Freq. eingeschalter	
12	Sägerahmen unten	
11	Hauptschraubstock gespannt	
10	Vorschubschraubstock gespannt	
9	NON-AUS Taste	
8	STOP des automatischen Zyklus	
7	START des automatischen Zyklus	
6	Manuelles bedienen aktiviert	Material anwesend - Vorschubschraub.
5	Automatisches Bedienen aktiviert	Microniser aktiviert
4	Störungsrelais des Freq. eingeschalter	Kühlmittelpumpe aktiviert
3	Schutz der Hydraulikpumpe OK	Sicherheitsschaltung verbunden
2	Schutz des Spänförderers OK	
1	Schutz der Kühlmittelpumpe OK	

	CPU - Ausgabe - Einheitsstand
12	Versorgung 5V
11	Versorgung 5V - KOM
10	Intern CAN - TXD
9	Intern CAN - RXD
8	Extern CAN - TXD
7	Extern CAN - RXD
6	
5	
4	vorschub in der gewünschen Position
3	Vorschubregulierung aktiv
2	Vorschub nach hinten
1	Vorschub nach vorne

18

BOMAR, s.r.o.
Těžební 1236/1
CZ 627 00, Brno

Stroj/Machine/Maschine: Ergonomic 290.250 GAC FM

Název stránky/Name page/Name seiten: LED Standanzeige

Číslo dok./Doc.No/Anzahl der Dokumente.:	ES-2300F-201/202-V1.1	List/Page/Seite:	19
Napájení/Power supply/Einspeinsung:	3x400V + PE / 50Hz		
Zpracoval/Processed /Hat verarbeitet:	Ing.Kostka	Listů/Pages/Seiten:	23
Datum/Date/Datum:	22.4.2016		

6.1.3. Ergonomic 290.250 GAC bez frekvenčního měniče
3x230V+PE, 50Hz

Obsah / Table of contents / Inhalt

Strana Page Seite	Název strany Page name Seitenname	Datum Date Datum
1	Úvodní strana / Start page / Startseite	22.4.2016
2	Obsah / Content / Inhalt	20.5.2016
3	Kusovník artiklů / Parts list / Artikelstückliste	20.5.2016
3.a	Kusovník artiklů / Parts list / Artikelstückliste	20.5.2016
3.b	Kusovník artiklů / Parts list / Artikelstückliste	20.5.2016
3.c	Kusovník artiklů / Parts list / Artikelstückliste	20.5.2016
4	Rozmístění prvků v rozvaděči R1 / Placement of elements in enclosure R1 / Platzierung der Elemente im Schaltschrank R1	22.4.2016
5	Ovládací panel na rozvaděči / Control panel / Badienpult	22.4.2016
6	Silová část / Power part / Netzteil	25.4.2016
7	Připojení pohonů / Drivings connection / Antriebsanschlub	25.4.2016
8	Propojení napájecích obvodů / Feeding circuits / Stromversorgungsgebiede	25.4.2016
9	Stýkače / Contactors / Schütze	25.4.2016
10	Signály spouštěčů, klávesnice / Signal of shields, keyboard / Schaltersignal, Tastatursignal	25.4.2016
11	Hydraulika / Hydraulics / Hydraulik	25.4.2016
12	Signály koncových spínačů / Signals of limit switches / signale der Endschalter	25.4.2016
13	Připojení modulů / Modules connection / Anschluss der Moduln	25.4.2016
14	Bezpečnostní obvod / Safety circuit / Sicherheitsschaltung	25.4.2016
15	Příslušenství / Accessories / Zubehör	25.4.2016
16	Signalizace LED diod	22.4.2016
17	Signalling LEDs	22.4.2016
18	LED Standanzeige	22.4.2016

Kusovník artiklů / Parts list / Stückliste

Označení přístroje Device identification Geräteidentifikation	Typ přístroje Device description Gerätebeschreibung	Objednací číslo Type number Typennummer	Výrobce Manufacturer Hersteller	Skladové číslo Part number Lagernummer	Množství Quantity Menge	Umístění Location Stelle
-BM1	Bezpečnostní relé 24VDC, 3NO Safety relay 24VDC, 3NO Sicherheitsrelais 24VDC, 3NO	BT50	ABB	91.051.063	1	/14.5
-FA1	Motorový spouštěč - 0.63A Motor starter - 0.63A Motorstarter - 0.63A	MS116-0,63	ABB	91.045.018	1	/7.1
-FA1	Pomocné kontakty - 1xNO+1xNC Auxiliary contacts - 1xNO+1xNC Hilfskontakte - 1xNO+1xNC	HKF1-11	ABB	91.046.002	1	/7.1
-FA2	Motorový spouštěč - 1.6A Motor starter - 1.6A Motorstarter - 1.6A	MS116-1,6	ABB	91.045.020	1	/7.3
-FA2	Pomocné kontakty - 1xNO+1xNC Auxiliary contacts - 1xNO+1xNC Hilfskontakte - 1xNO+1xNC	HKF1-11	ABB	91.046.002	1	/7.3
-FA3	Motorový spouštěč - 6.3A Motor starter - 6.3A Motorstarter - 6.3A	MS116-6,3	ABB	91.045.023	1	/7.5
-FA3	Pomocné kontakty - 1xNO+1xNC Auxiliary contacts - 1xNO+1xNC Hilfskontakte - 1xNO+1xNC	HKF1-11	ABB	91.046.002	1	/7.5
-FA4	Motorový spouštěč - 10A Motor starter - 10A Motorstarter - 10A	MS116-10,0	ABB	91.045.024	1	/7.7
-FA4	Pomocné kontakty - 1xNO+1xNC Auxiliary contacts - 1xNO+1xNC Hilfskontakte - 1xNO+1xNC	HKF1-11	ABB	91.046.002	1	/7.7
-KM1	Ministýkač 4kW/400V Minicontactor 4kW/400V Minischutz 4kW/400V	B6S-30-01-1.7-71	ABB	91.040.049	1	/9.2
-KM2	Ministýkač 4kW/400V Minicontactor 4kW/400V Minischutz 4kW/400V	B6S-30-01-1.7-71	ABB	91.040.049	1	/9.4
-KM3	Ministýkač 4kW/400V Minicontactor 4kW/400V Minischutz 4kW/400V	B6S-30-01-1.7-71	ABB	91.040.049	1	/9.5

The manufacturer reserves right to use an equivalent replacement device.

2

Kusovník artiklů / Parts list / Stückliste

Označení přístroje Device identification Geräteidentifikation	Typ přístroje Device description Gerätebeschreibung	Objednací číslo Type number Typennummer	Výrobce Manufacturer Hersteller	Skladové číslo Part number Lagernummer	Množství Quantity Menge	Umístění Location Stelle
-KM4	Ministýkač 4kW/400V Minicontactor 4kW/400V Minischutz 4kW/400V	B6S-30-01-1.7-71	ABB	91.040.049	1	/9.7
-KM11	Ministýkač 4kW/400V Minicontactor 4kW/400V Minischutz 4kW/400V	B6S-30-01-1.7-71	ABB	91.040.049	1	/14.7
-KM11	Pomocné kontakty - 1xNO+1xNC Auxiliary contacts - 1xNO+1xNC Hilfskontakte - 1xNO+1xNC	CAF 6-11M	ABB	91.041.042	1	/14.7
-KM12	Ministýkač 4kW/400V Minicontactor 4kW/400V Minischutz 4kW/400V	B6S-30-01-1.7-71	ABB	91.040.049	1	/14.8
-KM12	Pomocné kontakty - 1xNO+1xNC Auxiliary contacts - 1xNO+1xNC Hilfskontakte - 1xNO+1xNC	CAF 6-11M	ABB	91.041.042	1	/14.8
-PA1	Pojistkový odpojovač E-90 - 2P Fuse disconnector E-90 - 2P Sicherungstrenner E90 - 2P	E 92/32	ABB	91.241.013	1	/8.4
-QS1	3 pólový odpínač, 16A Disconnector - 3P, 16A	OT16F3	ABB	91.170.015	1	/6.0
-A1.1	Sestavený modul CPU2-E (UNIVERZALNI) Assembled module CPU2-E (UNIVERSAL) Montiert Modul CPU2-E (UNIVERSAL)	CPU2-E	Bomar	266.222	1	/13.6
-A1.3	Sestavený modul JDI-2/2 Assembled module JDI-2/2 náhrada za 91.995.039	JDI-2/2	Bomar	266.216	1	/13.3
-A1.5	Sestavený modul JDO-2/0 (plně osazený) Assembled module JDO-2/0 (fully manned) náhrada za 91.995.040	JDO-2/0	Bomar	266.224	1	/13.0
-DKL	Sestavený modul DKL-F5 (display) Assembled module DKL-F5 (display) náhrada za 91.995.048	DKL-F5	Bomar	266.219	1	/13.8
-DM1	Výrobek-deska OCHRANA3 Product-board OCHRANA3 Produkt-board OCHRANA 3	OCHR3	Bomar	266.255	1	/8.3

The manufacturer reserves right to use an equivalent replacement device.

3

BOMAR, s.r.o.
Těžební 1236/1
CZ 627 00, Brno

Stroj/Machine/Maschine: Ergonomic 290.250 GAC

Název stránky/Name page/Name seiten: Kusovník artiklů / Parts list / Artikelstückliste

Číslo dok./Doc.No/Anzahl der Dokumente.:	ES-2300-203-V1.1	List/Page/Seite:	3.a
Napájení/Power supply/Einspeisung:	3x230V + PE / 50Hz		
Zpracoval/Processed /Hat verarbeitet:	Ing.Kostka	Listů/Pages/Seiten:	21
Datum/Date/Datum:	20.5.2016		

Kusovník artiklů / Parts list / Stückliste

Označení přístroje Device identification Geräteidentifikation	Typ přístroje Device description Gerätebeschreibung	Objednací číslo Type number Typennummer	Výrobce Manufacturer Hersteller	Skladové číslo Part number Lagernummer	Množství Quantity Menge	Umístění Location Stelle
-FU1	Pojistka trubičková - 1A/250V, pomalá, 5x20 Tube fuse - 1A/250V, slow, 5x20 Rohrsicherung - 1A / 250V, langsam, 5x20	T1A/250V	ESKA	91.230.031	1	/8.4
-FU2	Pojistka trubičková - 6,3A/250V, pomalá, 5x20 Tube fuse - 6,3A/250V, slow, 5x20 Rohrsicherung - T6,3A / 250V, langsam, 5x20	T6,3A/250V	ESKA	91.230.002	1	/8.4
-SB500	Total stop - hlavice + 3xNC Emergency-stop mushroom push - button + 3xNC Not-Aus-Pilz - Taster + 3 xNC	YW1B-V4E02R	IDEC	91.060.084	1	/14.4
-SB500	Kontakt - 1x NO Contact - 1x NO Kontakt - 1x NO	YW-E10	IDEC	91.061.044	1	/14.4
-RCF1	Filtr RFC vývodový Efferent RFC filter Ableitenden RFC Filter	FBOPR1624	Ing. Miroslav Vlček	91.041.015	1	/7.0
-RCF2	Filtr RFC vývodový Efferent RFC filter Ableitenden RFC Filter	FBOPR1624	Ing. Miroslav Vlček	91.041.015	1	/7.2
-RCF3	Filtr RFC vývodový Efferent RFC filter Ableitenden RFC Filter	FBOPR1624	Ing. Miroslav Vlček	91.041.015	1	/7.4
-RCF4	Filtr RFC vývodový Efferent RFC filter Ableitenden RFC Filter	FBOPR1624	Ing. Miroslav Vlček	91.041.015	1	/7.6
-RCF11	Filtr RFC vývodový Efferent RFC filter Ableitenden RFC Filter	FBOPR1624	Ing. Miroslav Vlček	91.041.015	1	/6.6
-RCF12	Filtr RFC vývodový Efferent RFC filter Ableitenden RFC Filter	FBOPR1624	Ing. Miroslav Vlček	91.041.015	1	/6.7
-SQ21	Bezpečnostní koncový spínač - 2xNC Safety Limit Switch - 2x NC Sicherheitsendschalter - 2x NC	QKS8	KEDU	91.173.012	1	/14.4
-SQ22	Bezpečnostní koncový spínač - 2xNC Safety Limit Switch - 2x NC Sicherheitsendschalter - 2x NC	QKS8	KEDU	91.173.012	1	/14.2

The manufacturer reserves right to use an equivalent replacement device.

3.a

Kusovník artiklů / Parts list / Stückliste

Označení přístroje Device identification Geräteidentifikation	Typ přístroje Device description Gerätebeschreibung	Objednací číslo Type number Typennummer	Výrobce Manufacturer Hersteller	Skladové číslo Part number Lagernummer	Množství Quantity Menge	Umístění Location Stelle
-PA1	Pojistka válcová - 1A, 10x38, pomalá Tube fuse - 1A, 10x38, slow Rohrsicherung - 1A, 10x38, langsam	PV10 1A aM	OEZ	91.231.001	2	/8.4
-QS2	Spínač vačkový - 2 polohy Switch cam - 2 positions Switch cam - 2 positions	S10-60129	SALZER ELECTRONICS LIMITED	91.171.006	1	/7.7
-SA1	SPÍNAČ ČERNÝ 3 polohy - Harmony Switch black 3 positions - Harmony Schalter schwarz 3 Positionen - Harmony	ZB5-AD3	TELEMECANIQUE	91.060.024	1	/10.4
-SA2	SPÍNAČ ČERNÝ 3 polohy - Harmony Switch black 3 positions - Harmony Schalter schwarz 3 Positionen - Harmony	ZB5-AD3	TELEMECANIQUE	91.060.024	1	/10.7
-SB1	hlavice zelená prosvětléná - Harmony Head green backlit - Harmony Kopf grün Hintergrundbeleuchtung - Harmony	ZB5AW33	TELEMECANIQUE	91.060.019	1	/10.5
-SB2	Hlavice tlačítka černá Button black head Taste Mitesser	ZB5AA2	TELEMECANIQUE	91.060.013	1	/10.6
-SB501	Hlavice prosvětleného tlačítka žlutá The button head backlit yellow Der Knopf Kopf von hinten beleuchtet gelb	ZB5AW35	TELEMECANIQUE	91.060.023	1	/14.6
-RCF0	Vstupní odrušovací filtr 16A Input noise filter 16A Eingangsrauschfilter 16A	16EB15/50	WIDECOM TECHNOLOGY s.r.o.	91.041.062	1	/6.1
-FU1	Svorka pojistková Fuse terminal Sicherungsklemme	WK4/THSI5U	WIELAND	91.251.102	1	/8.4
-FU2	Svorka pojistková Fuse terminal Sicherungsklemme	WK4/THSI5U	WIELAND	91.251.102	1	/8.4

The manufacturer reserves right to use an equivalent replacement device.

3.b

+R1

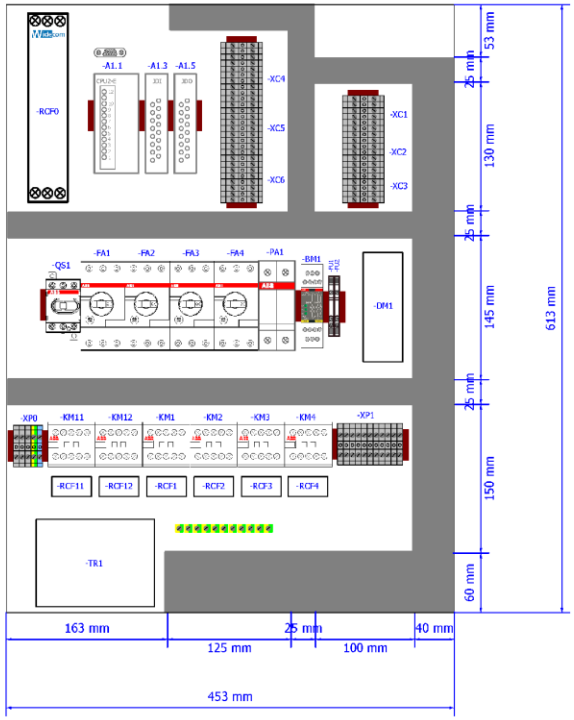

3.c

BOMAR, s.r.o. Těžební 1236/1 CZ 627 00, Brno	Stroj/Machine/Maschine: Ergonomic 290.250 GAC	Název stránky/Name page/Name seiten: Rozmístění prvků v rozvaděči R1 / Placement of elements in enclosure R1 / Platzierung der Elemente im Schaltschrank R1	Číslo dok./Doc.No/Anzahl der Dokumente.:	ES-2300-203-V1.1	List/Page/Seite: 4
			Napájení/Power supply/Einspeisung:	3x230V + PE / 50Hz	Listů/Pages/Seiten: 21
			Zpracoval/Processed /Hat verarbeitet:	Ing.Kostka	
			Datum/Date/Datum:	22.4.2016	

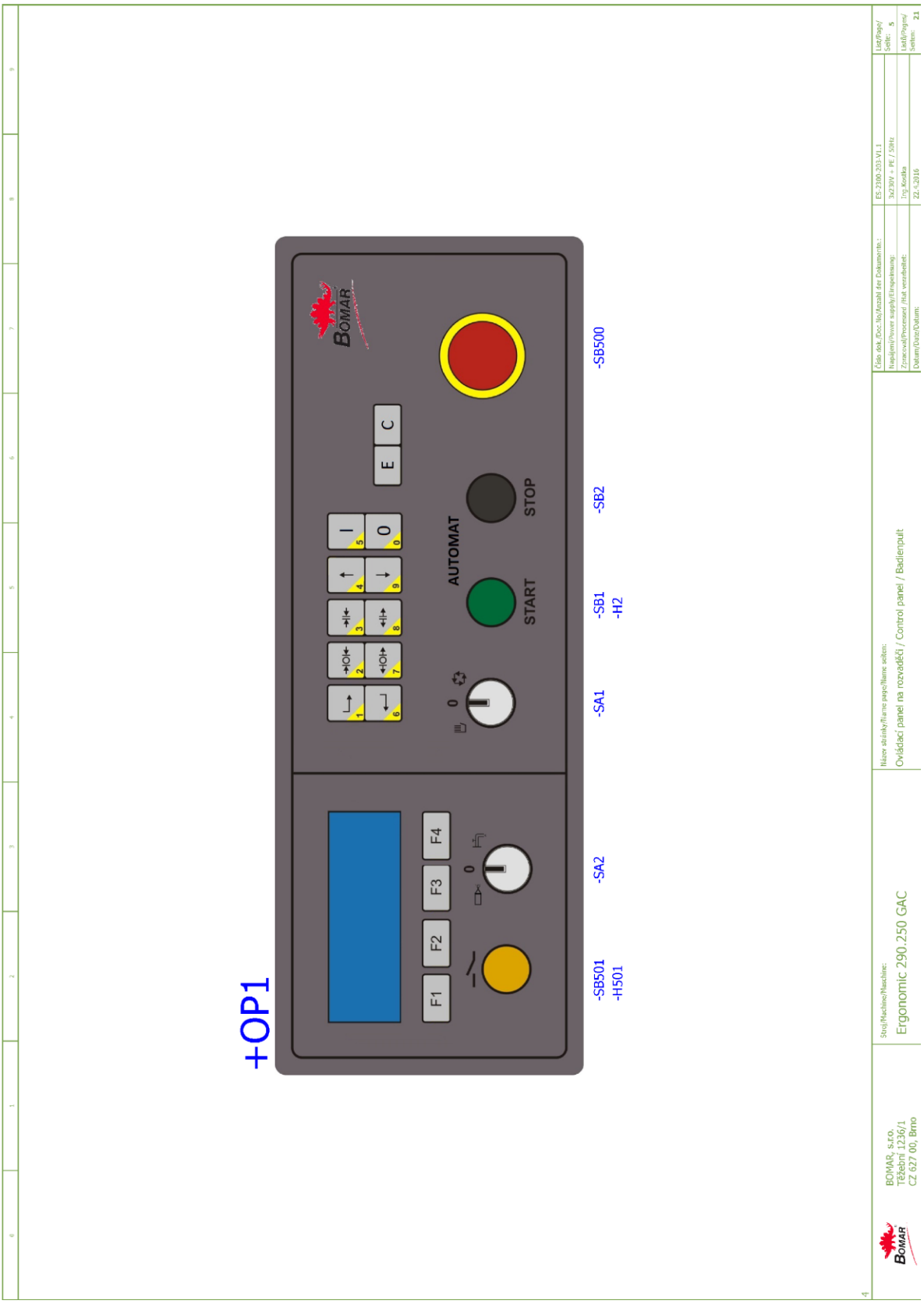
+OP1
-SB501
-H501
-SA2
-SA1
-SB1
-H2
-SB2
-SB500
F1
F2
F3
F4
AUTOMAT
START
STOP
E
C
BOMAR, s.r.o.
Těšeňní 1236/1
CZ 627 00, Brno
Stroj/Machine/Maschine:
Ergonomic 290.250 GAC
Název skaniky/Name page/Name seiten:
Ovládací panel na rozvaděči / Control panel / Badienpult
Číslo dok./Doc.No/Anzahl der Dokumente:
ES 2390.203-V1.1
List/Page/Seite: 5
Napájení/Power supply/Einspeisung:
3x230V + PE / 50Hz
List/Pages/Seiten: 21
Zpracoval/Processed / Hat verarbeitet:
Ing.Kocka
Datum/Date/Datum:
22.4.2016

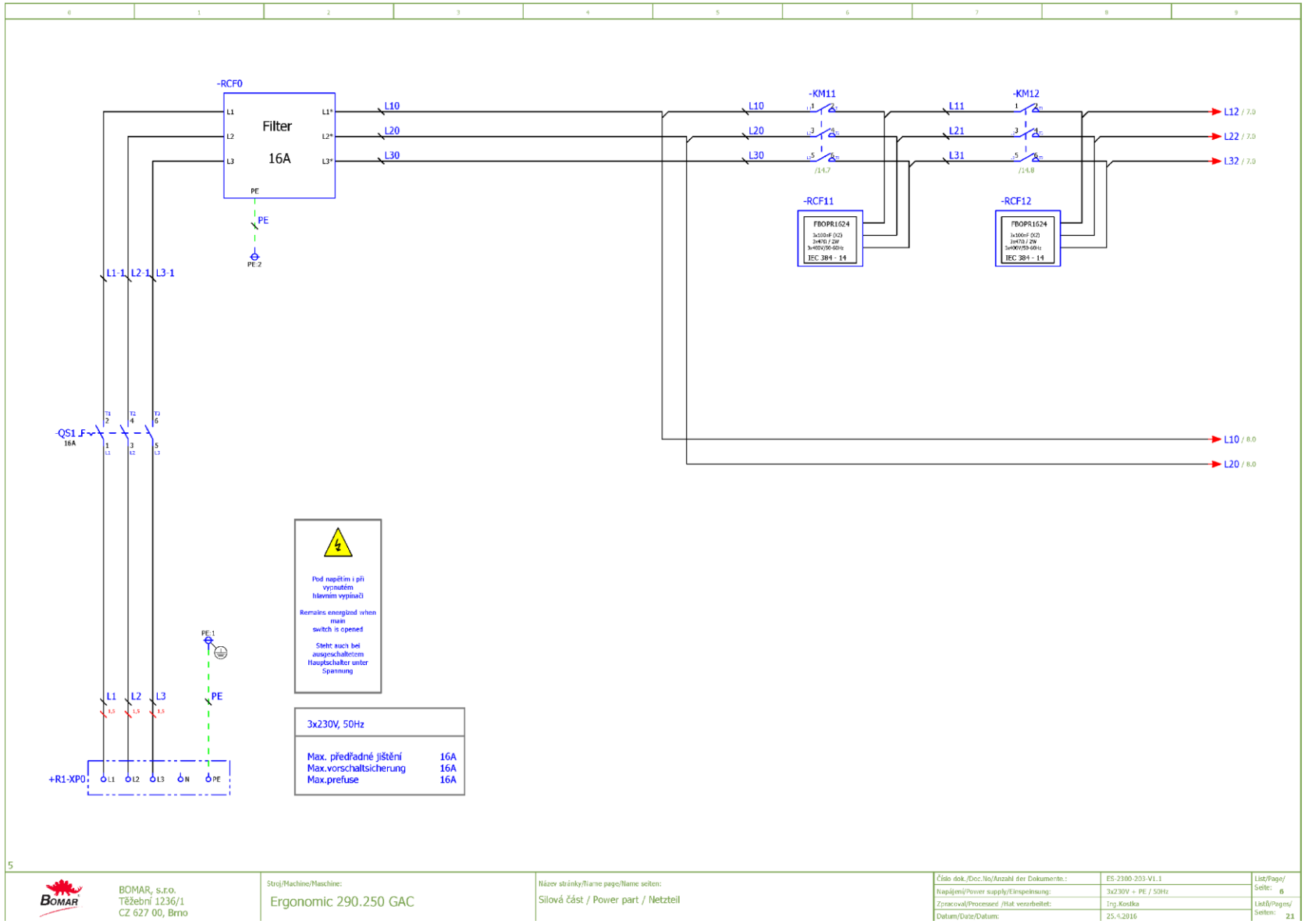
-RCF0
Filter
16A
L1
L2
L3
L1*
L2*
L3*
PE
PE:2
L10
L20
L30
-KM11
-KM12
L11
L21
L31
/14.7
/14.8
-RCF11
-RCF12
FBOPR1624
IEC 384 - 14
L12 / 7.0
L22 / 7.0
L32 / 7.0
L10 / 8.0
L20 / 8.0
L1-1
L2-1
L3-1
-QS1
16A
PE:1
+R1-XP0
N
Pod napětím i při vypnutém hlavním vypínači
Remains energized when main switch is opened
Steht auch bei ausgeschaltetem Hauptschalter unter Spannung
3x230V, 50Hz
Max. předřadné jištění 16A
Max.vorschaltsicherung 16A
Max.prefuse 16A
BOMAR, s.r.o.
Těžební 1236/1
CZ 627 00, Brno
Stroj/Machine/Maschine:
Ergonomic 290.250 GAC
Název stránky/Name page/Name seiten:
Silová část / Power part / Netzteil
Číslo dok./Doc.No/Anzahl der Dokumente.: ES-2300-203-V1.1
Napájení/Power supply/Einspeisung: 3x230V + PE / 50Hz
Zpracoval/Processed /Hat verarbeitet: Ing.Kostka
Datum/Date/Datum: 25.4.2016
List/Page/Seite: 6
Listů/Pages/Seiten: 21

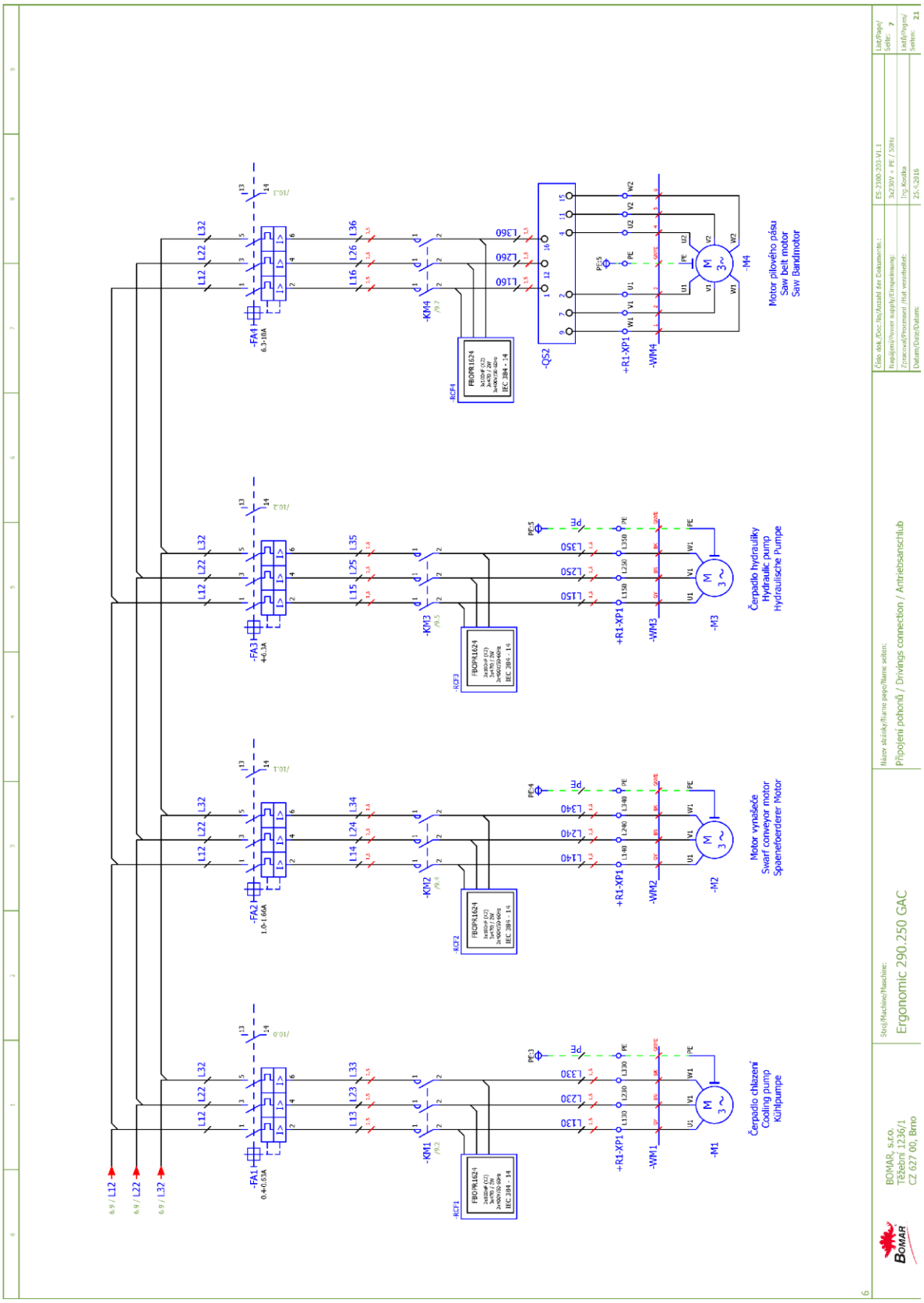
Čerpadlo chlazení
Cooling pump
Kühlpumpe
Motor vynašeče
Swarf conveyor motor
Spaneforderer Motor
Čerpadlo hydrauliky
Hydraulic pump
Hydrauliische Pumpe
Motor pilového pásu
Saw belt motor
Saw Bandmotor
-M1
-M2
-M3
-M4
-WM1
-WM2
-WM3
-WM4
+R1-XP1
-QS2
-KM1
-KM2
-KM3
-KM4
-FA1
-FA2
-FA3
-FA4
-RCF1
-RCF2
-RCF3
-RCF4
Stroj/Machine/Maschine:
Ergonomic 290.250 GAC
BOMAR, s.r.o.
Těšeňní 1236/1
CZ 627 00, Brno
Název zákrsky/Name page/Name seiten:
Připojení pohonů / Drivings connection / Antriebsanschlüb
ES 2390-203-V1.1
3x230V + PE / 50Hz
Ing. Kocka
25.4.2016
List/Page/Seite: 7
List/Pages/Seiten: 21

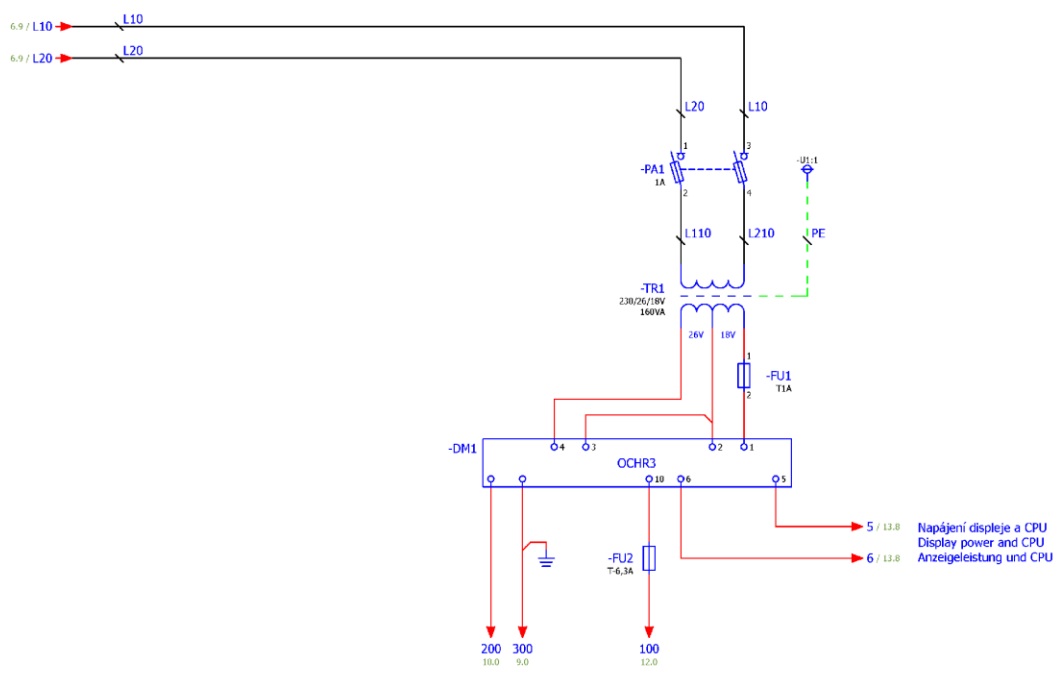

7

BOMAR, s.r.o. Těžební 1236/1 CZ 627 00, Brno	Stroj/Machine/Maschine: Ergonomic 290.250 GAC	Název stránky/Name page/Name seiten: Propojení napájecích obvodů / Feeding circuits / Stromversorgungsgebiede	Číslo dok./Doc.No/Anzahl der Dokumente.: ES-2300-203-V1.1 Napájení/Power supply/Einspeisung: 3x230V + PE / 50Hz Zpracoval/Processed /Hat verarbeitet: Ing.Kostka Datum/Date/Datum: 25.4.2016	List/Page/Seite: 8 Listů/Pages/Seiten: 21

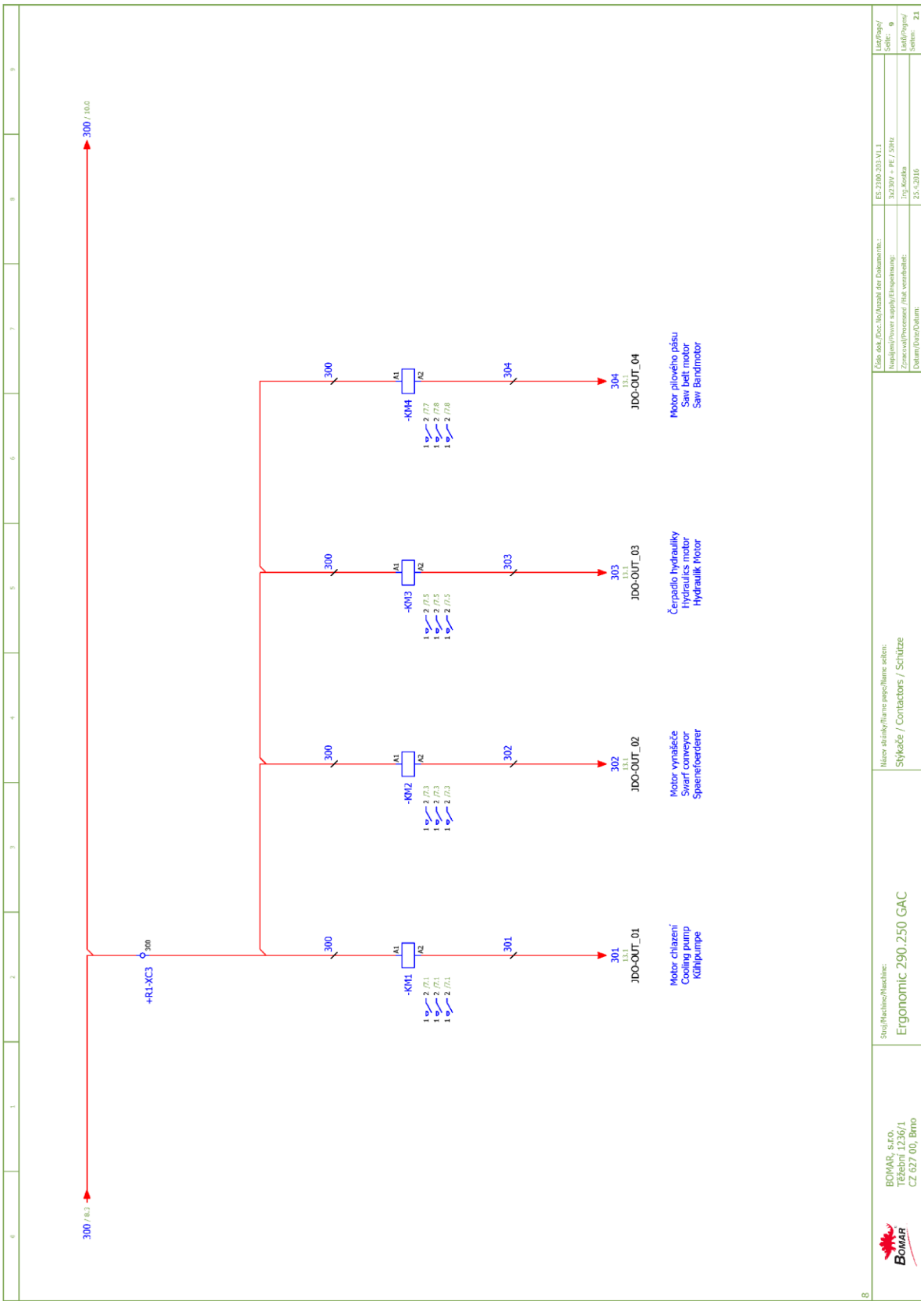
300 / 10.0
300 / 8.3
+R1-XC3
300
-KM1
-KM2
-KM3
-KM4
A1
A2
301
302
303
304
JDO-OUT_01
JDO-OUT_02
JDO-OUT_03
JDO-OUT_04
Motor chlazení
Cooling pump
Kühlpumpe
Motor vynašeče
Svarf conveyor
Spoerneforderer
Čerpadlo hydrauliky
Hydraulics motor
Hydraulik Motor
Motor pilového pásu
Saw belt motor
Saw Bandmotor
BOMAR, s.r.o.
Těšební 1236/1
CZ 627 00, Brno
Stroj/Machine/Maschine:
Ergonomic 290.250 GAC
Název skrinky/Name panel/Name schrank:
Stýkače / Contactors / Schütze
Číslo dok./Doc. No./Anzahl der Dokumente:
ES 2360-203-V1.1
List/Page/Seite: 9
Napájení/Power supply/Einspeisung:
3x230V + PE / 50Hz
Zpracoval/Processed/Hat verarbeitet:
Ing.Koeka
List/Pages/Seiten: 21
Datum/Date/Datum:
25.4.2016

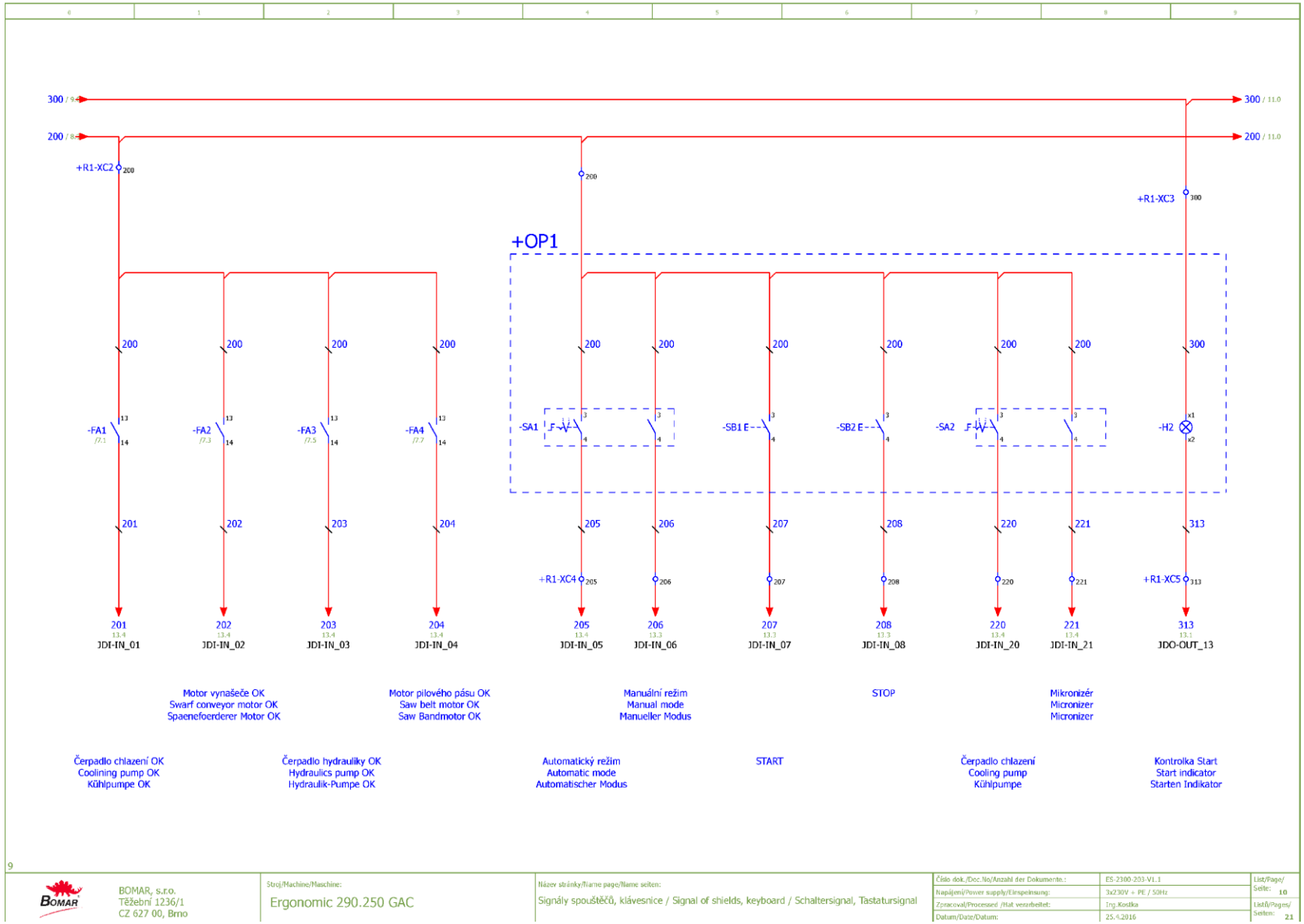
300 / 9.0
200 / 8.0
300 / 11.0
200 / 11.0
+R1-XC2
+R1-XC3
+OP1
-FA1
-FA2
-FA3
-FA4
-SA1
-SB1
-SB2
-SA2
-H2
+R1-XC4
+R1-XC5
201 JDI-IN_01
202 JDI-IN_02
203 JDI-IN_03
204 JDI-IN_04
205 JDI-IN_05
206 JDI-IN_06
207 JDI-IN_07
208 JDI-IN_08
220 JDI-IN_20
221 JDI-IN_21
313 JDO-OUT_13
Motor vynašeče OK
Swarf conveyor motor OK
Spaenefoerderer Motor OK
Motor pilového pásu OK
Saw belt motor OK
Saw Bandmotor OK
Manuální režim
Manual mode
Manueller Modus
STOP
Mikronizér
Micronizer
Micronizer
Čerpadlo chlazení OK
Coolining pump OK
Kühlpumpe OK
Čerpadlo hydrauliky OK
Hydraulics pump OK
Hydraulik-Pumpe OK
Automatický režim
Automatic mode
Automatischer Modus
START
Čerpadlo chlazení
Cooling pump
Kühlpumpe
Kontrolka Start
Start indicator
Starten Indikator
BOMAR, s.r.o.
Těžební 1236/1
CZ 627 00, Brno
Stroj/Machine/Maschine:
Ergonomic 290.250 GAC
Název stránky/Name page/Name seiten:
Signály spouštěčů, klávesnice / Signal of shields, keyboard / Schaltersignal, Tastatursignal
Číslo dok./Doc.No/Anzahl der Dokumente.: ES-2300-203-V1.1
Napájení/Power supply/Einspeisung: 3x230V + PE / 50Hz
Zpracoval/Processed /Hat verarbeitet: Ing.Kostka
Datum/Date/Datum: 25.4.2016
List/Page/Seite: 10
Listů/Pages/Seiten: 21

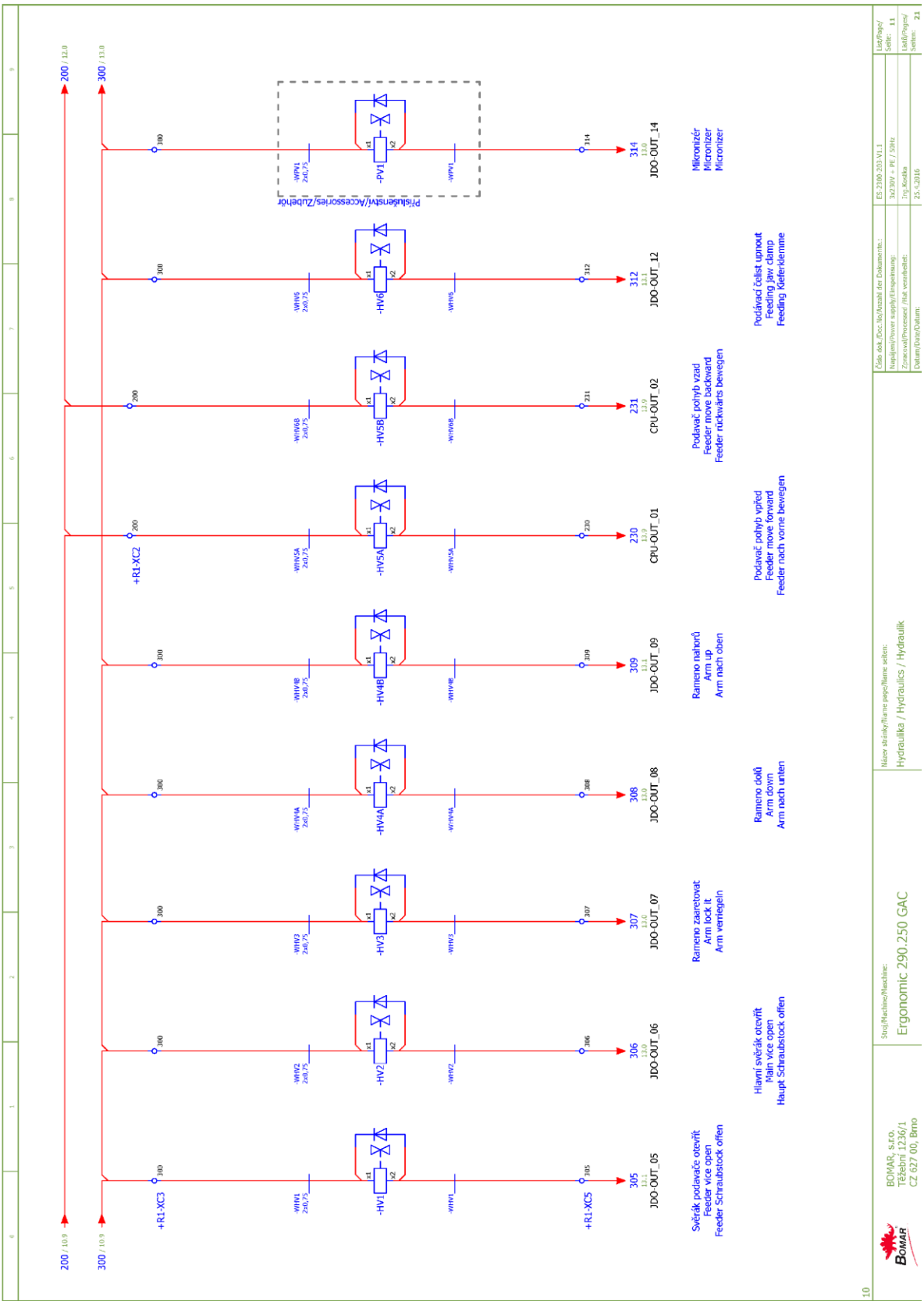
200 / 12.0
300 / 13.0
200 / 10.9
300 / 10.9
+R1-XC3
+R1-XC2
+R1-XC5
-WHV1 2x0,75
-WHV2 2x0,75
-WHV3 2x0,75
-WHV4A 2x0,75
-WHV4B 2x0,75
-WHV5A 2x0,75
-WHV6B 2x0,75
-WHV5 2x0,75
-WPV1 2x0,75
-HV1
-HV2
-HV3
-HV4A
-HV4B
-HV5A
-HV5B
-HV6
-PV1
Příslušenství/Accessories/Zubehör
305 DJ JDO-OUT_05
306 DJ JDO-OUT_06
307 DJ JDO-OUT_07
308 DJ JDO-OUT_08
309 DJ JDO-OUT_09
230 DJ CPU-OUT_01
231 DJ CPU-OUT_02
312 DJ JDO-OUT_12
314 DJ JDO-OUT_14
Svěrák podavače otevřít
Feeder vice open
Feeder Schraubstock offen
Hlavní svěrák otevřít
Main vice open
Haupt Schraubstock offen
Rameno zaaretovat
Arm lock it
Arm verriegeln
Rameno dolů
Arm down
Arm nach unten
Rameno nahorů
Arm up
Arm nach oben
Podavač pohyb vpřed
Feeder move forward
Feeder nach vorne bewegen
Podavač pohyb vzad
Feeder move backward
Feeder rückwärts bewegen
Podávací čelist upnout
Feeding jaw clamp
Feeding Kieferklemme
Mikronizér
Micronizer
Micronizer
BOMAR, s.r.o.
Těšínní 1236/1
CZ 627 00, Brno
Stroj/Machine/Maschine:
Ergonomic 290.250 GAC
Název zákazníka/Name page/Name seiten:
Hydraulika / Hydraulics / Hydraulik
Číslo dok./Doc. No./Anzahl der Dokumente:
ES 2390.203-V1.1
List/Page/Seite: 11
List/Page/Seiten: 21
Napájení/Power supply/Einspeisung:
3x230V + PE / 50Hz
Zpracoval/Processed/ /Hat verarbeitet:
Ing. Kocka
Datum/Date/Datum:
25.4.2016
10

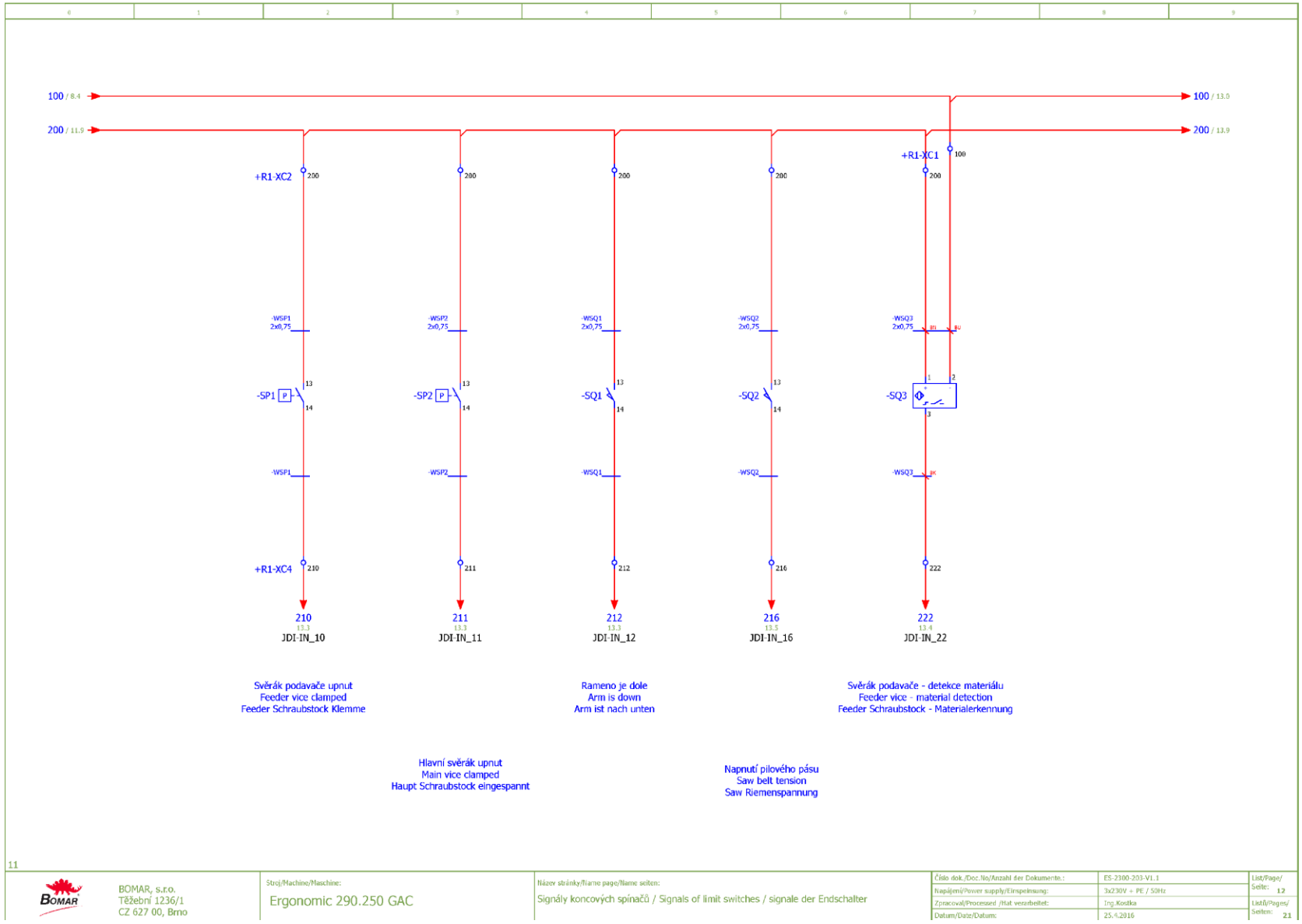

Schémata
Schemas
Schematics

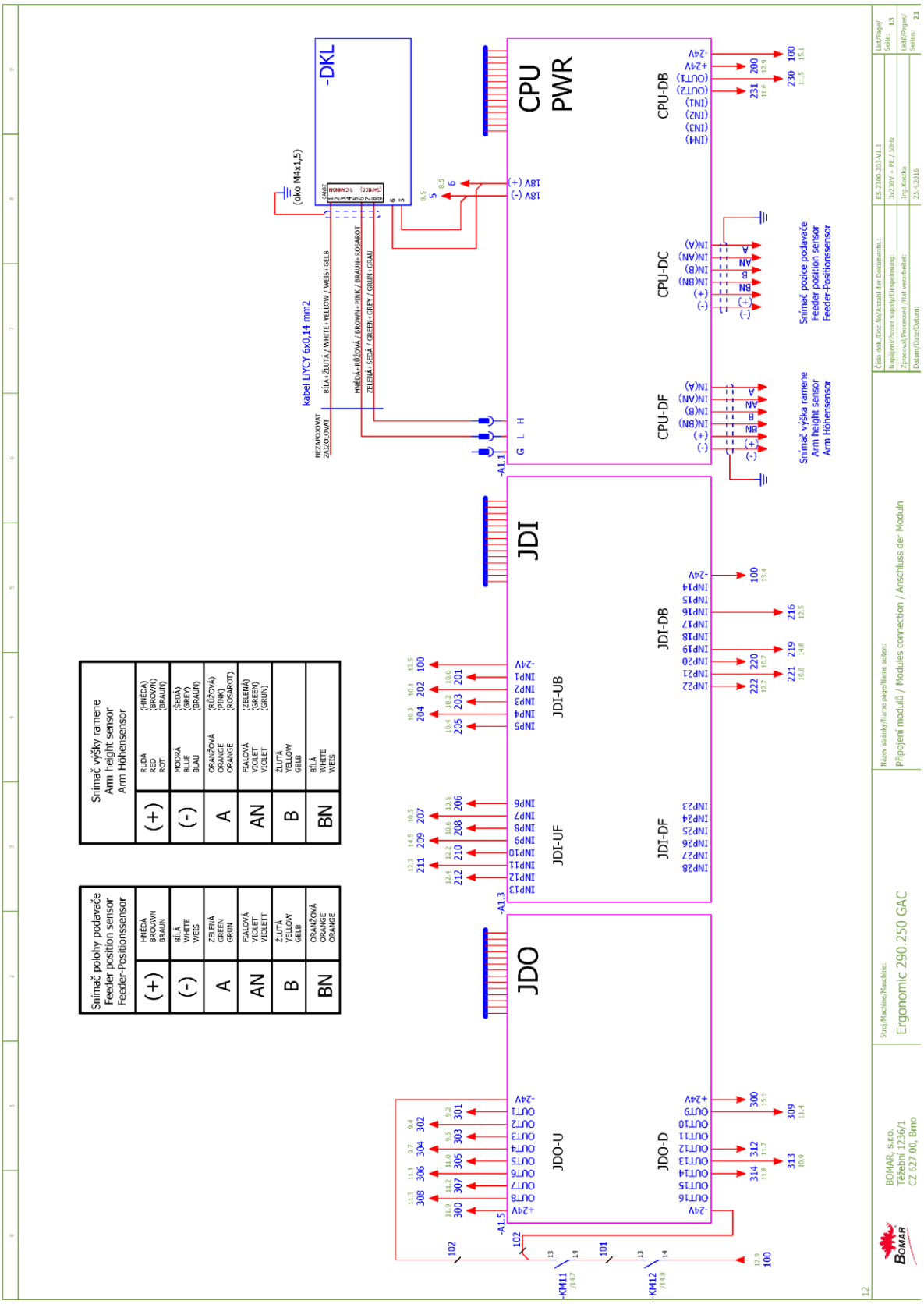
Snímač výšky ramene
Arm height sensor
Arm Höhensensor
(+) RUDÁ RED ROT (HNĚDÁ) (BROWN) (BRAUN)
(-) MODRÁ BLUE BLAU (ŠEDÁ) (GREY) (BRAUN)
A ORANŽOVÁ ORANGE ORANGE (RŮŽOVÁ) (PINK) (ROSAROT)
AN FIALOVÁ VIOLET VIOLET (ZELENÁ) (GREEN) (GRÜN)
B ŽLUTÁ YELLOW GELB
BN BÍLÁ WHITE WEIS
Snímač polohy podavače
Feeder position sensor
Feeder-Positionssensor
(+) HNĚDÁ BROWN BRAUN
(-) BÍLÁ WHITE WEIS
A ZELENÁ GREEN GRÜN
AN FIALOVÁ VIOLETT VIOLETT
B ŽLUTÁ YELLOW GELB
BN ORANŽOVÁ ORANGE ORANGE
-DKL
(oko M4x1,5)
kabel LiYCY 6x0,14 mm2
BÍLÁ+ŽLUTÁ / WHITE+YELLOW / WEIS+GELB
HNĚDÁ+RŮŽOVÁ / BROWN+PINK / BRAUN+ROSAROT
ŠEDÁ+ŠPINĚ / GREEN+GREY / GRÜN+GRAU
NEZAPOJOVAT
ZAZOLOVAT
18V (+)
18V (-)
CPU
PWR
JDI
JDO
JDI-UB
JDI-UF
JDI-DB
JDI-DF
JDO-U
JDO-D
CPU-DB
CPU-DC
CPU-DF
Snímač pozice podavače
Feeder position sensor
Feeder-Positionssensor
Snímač výška ramene
Arm height sensor
Arm Höhensensor
Číslo dok./Doc. No./Anzahl der Dokumente:
ES 2390.203-V1.1
Napájení/Power supply/Einspeisung:
3x230V + PE / 50Hz
Zpracoval/Processed/ /Hat verarbeitet:
Ing. Kocka
Datum/Date/Datum:
25.4.2016
List/Page/Seite: 13
List/Page/Seite: 21
Název skratky/Name page/Name seiten:
Připojení modulů / Modules connection / Anschluss der Moduln
Stroj/Machine/Maschine:
Ergonomic 290.250 GAC
BOMAR, s.r.o.
Těšební 1236/1
CZ 627 00, Brno
BOMAR

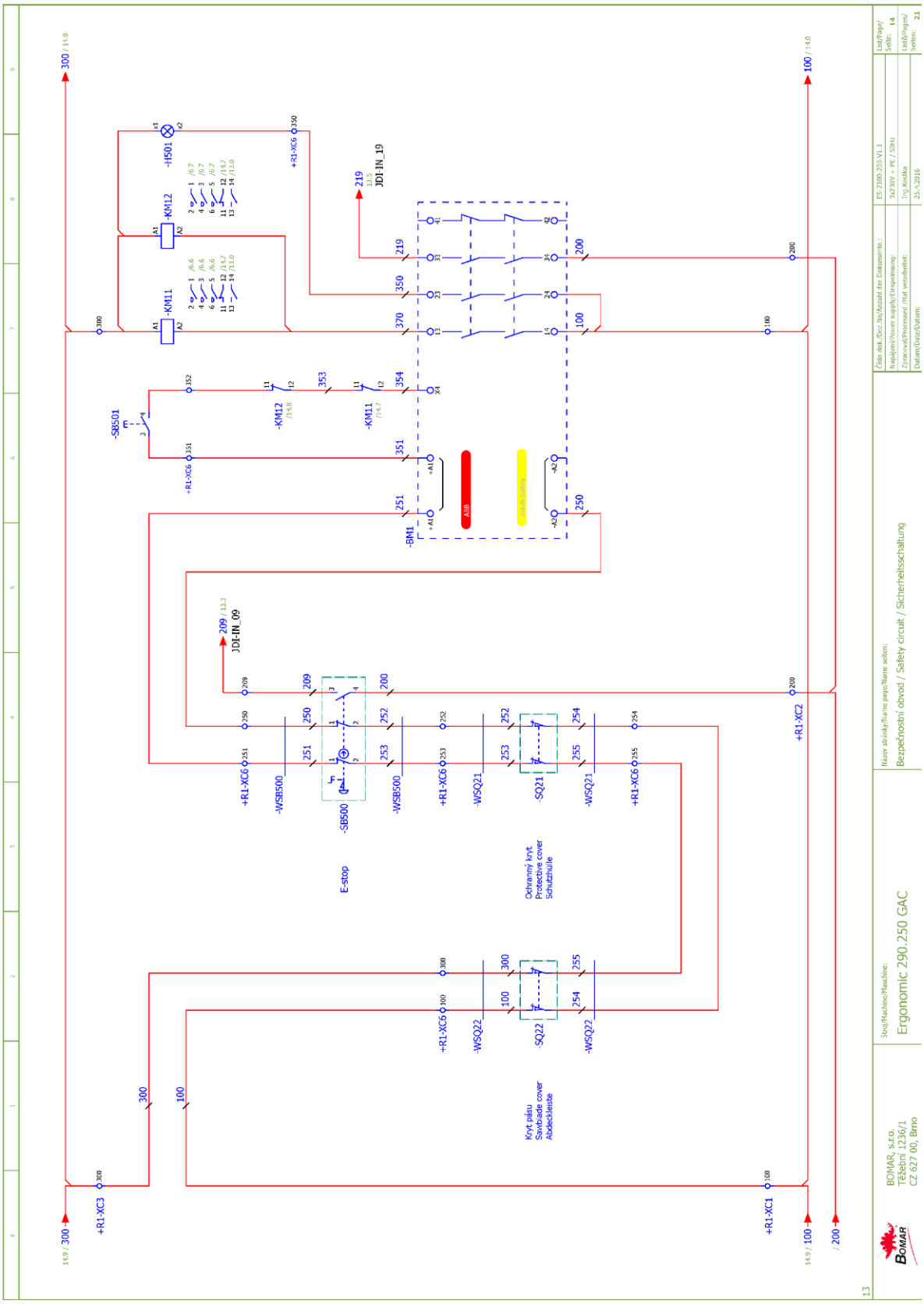
Název stránky/Name page/Name seiten:
Bezpečnostní obvod / Safety circuit / Sicherheitsschaltung
Stroj/Machine/Maschine:
Ergonomic 290.250 GAC
BOMAR, s.r.o.
Těšební 1236/1
CZ 627 00, Brno
E-stop
Ochranný kryt
Protective cover
schutzhülle
Kryt pásu
Sawblade cover
Abdeckleiste
-SB501
-KM12
-KM11
-H501
-BM1
-SB500
-WSB500
-WSQ21
-SQ21
-WSQ22
-SQ22
+R1-XC3
+R1-XC1
+R1-XC2
+R1-XC6
+R3-XC6
JDI-IN_19
JDI-IN_09
ES 2380.203-V1.1
3x230V + PE / 50Hz
Ing.Kostka
25.4.2016

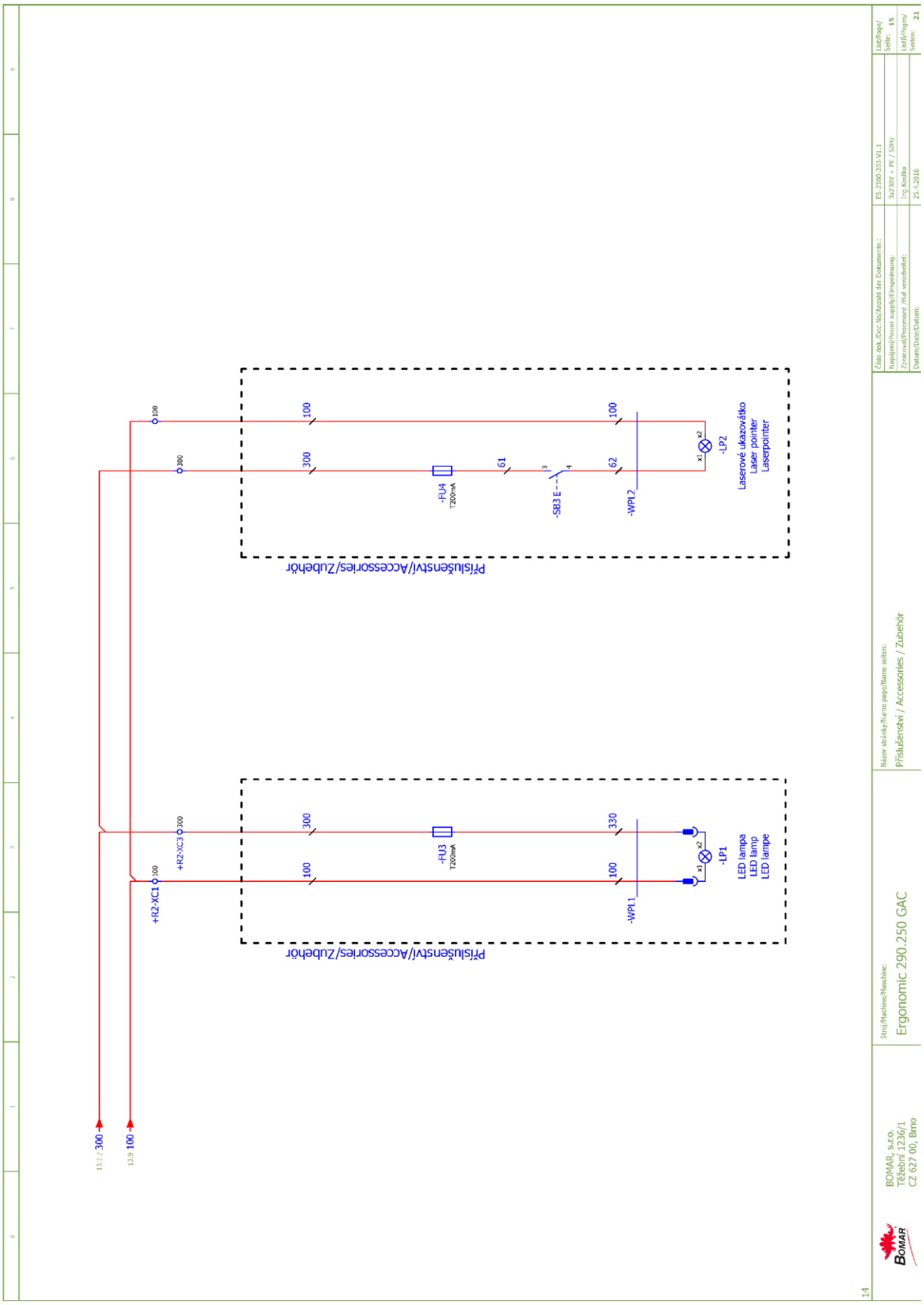
13.1 / 300
13.9 100
+R2-XC1 100
+R2-XC3 300
100
300
-FU3
T200mA
-FU4
T200mA
-WPL1
-WPL2
-SB3 E
-LP1
-LP2
LED lampa
LED lamp
LED lampe
Laserové ukazovátko
Laser pointer
Laserpointer
Příslušenství/Accessories/Zubehör
Příslušenství/Accessories/Zubehör
Číslo dok./Doc.No./Anzahl der Dokumente:
ES 2360-203-V1.1
Napájení/Power supply/Einspeisung:
3x230V + PE / 50Hz
Zpracoval/Processed/ /Hat verarbeitet:
Ing.Kocka
Datum/Date/Datum:
25.4.2016
List/Page/Seite: 15
List/Pages/Seiten: 21
Název skříňky/Name panel/Name schrank:
Příslušenství / Accessories / Zubehör
Stroj/Machine/Maschine:
Ergonomic 290.250 GAC
BOMAR, s.r.o.
Těšetín 1236/1
CZ 627 00, Brno
BOMAR
14

	JDO - Signalizace stavu výstupů
16	
15	
14	Aktivovat mikronizér
13	Aktivovat kontrolku automatického režimu
12	Podávací čelist uplnout
11	
10	
9	Rameno nahoru
8	Rameno dolů
7	Rameno aretovat
6	Otevřít hlavní svěrák
5	Otevřít podávací věrák
4	Zapnout motor pásu
3	Zapnout čerpadlo hydrauliky
2	Zapnout motor vynašeče
1	Zapnout motor chlazení

	JDI - Signalizace stavu vstupů	
	Tlačítko uvolněno	Tlačítko stisknuto
16	Pás pily napnout	
15		
14		
13		
12	Rameno je dole	
11	Hlavní svěrák upnut	
10	Podávací svěrák upnut	
9	Total stop aktivován	
8	Stop automatického režimu	
7	Start automatického režimu	
6	Aktivováno ruční ovládání	Materiál přítomen - podávací svěrák
5	Aktivováno automatické ovládání	Aktivován mikronizér
4	Ochrana motoru pásu OK	Aktivován motor chlazení
3	Ochrana čerpadla hydrauliky OK	Bezpečnostní obvod uzavřen
2	Ochrana motoru vynašeče OK	
1	Ochrana motoru chlazení OK	

	CPU - Signalizace stavu jednotky
12	Napájení 5V
11	Napájení 5V - KOM
10	Interní CAN - TXD
9	Interní CAN - RXD
8	Externí CAN - TXD
7	Externí CAN - RXD
6	
5	
4	Zadaná poloha dosažena
3	Regulace podavače aktivní
2	Podavač dozadu
1	Podavač dopředu

15

BOMAR, s.r.o.
Těžební 1236/1
CZ 627 00, Brno

Stroj/Machine/Maschine: Ergonomic 290.250 GAC

Název stránky/Name page/Name seiten: Signalizace LED diod

Číslo dok./Doc.No/Anzahl der Dokumente.:	ES-2300-203-V1.1
Napájení/Power supply/Einspeisung:	3x230V + PE / 50Hz
Zpracoval/Processed /Hat verarbeitet:	Ing.Kostka
Datum/Date/Datum:	22.4.2016

List/Page/Seite: 16
Listů/Pages/Seiten: 21

	JDO - Output state signalization
16	
15	
14	Activate the microniser
13	Switch on the automatic cycle indicator
12	Vice the feeding jaw
11	
10	
9	Put the arm up
8	Put the arm down
7	Unlock the arm
6	Open the main gripper
5	Open the feeding gripper
4	Turn on the band motor
3	Turn on the hydraulic pump
2	Turn on the swarf-removal motor
1	Turn on the cooling motor

	JDI - Input state signalization	
	Button released	Button pushed
16	Tight the sawband	
15		
14		
13		
12	The arm is down	
11	Main gripper is closed	
10	Feeding gripper is closed	
9	Total stop aktivated	
8	Automatic mode stopped	
7	Automatic mode started	
6	Manual control activated	Material is present - feeding gripper
5	Automatic control activated	Microniser activated
4	Band motor protection OK	Cooling motor activated
3	Hydraulic pump protection OK	Security circuit is OK
2	Swarf-rem. motor protection is OK	
1	Cooling motor protection OK	

	CPU - unit state signalization
12	Voltage 5V
11	Voltage 5V - KOM
10	Internal CAN - TXD
9	Internal CAN - RXD
8	External CAN - TXD
7	External CAN - RXD
6	
5	
4	Desired location reached
3	Feeder regulation is active
2	Feeder to the back
1	Feeder to the front

16

BOMAR, s.r.o.
Těžební 1236/1
CZ 627 00, Brno

Stroj/Machine/Maschine: Ergonomic 290.250 GAC

Název stránky/Name page/Name seiten: Signalling LEDs

Číslo dok./Doc.No/Anzahl der Dokumente.:	ES-2300-203-V1.1	List/Page/Seite: 17
Napájení/Power supply/Einspeisung:	3x230V + PE / 50Hz	
Zpracoval/Processed /Hat verarbeitet:	Ing.Kostka	Listů/Pages/Seiten: 21
Datum/Date/Datum:	22.4.2016	

	JDO - Ausgabe - Standanzeige
16	
15	
14	Microniser aktivieren
13	Kontrolleuchte (aut.Betrieb) aktivieren
12	Vorschubbacke spannen
11	
10	
9	Sägerahmen nach oben
8	Sägerahmen nach unten
7	Sägerahmen nicht arretieren
6	Hauptschraubstock öffnen
5	Vorschubschraubstock öffnen
4	Sägebandantrieb einschalten
3	Hydraulikpumpe einschalten
2	Spänförderer einschalten
1	Kühlmittelpumpe einschalten

	JDI - Eingabe - Standanzeige	
	Taste gelöst	Taste gedrückt
16	Sägeband gespannt	
15		
14		
13		
12	Sägerahmen unten	
11	Hauptschraubstock gespannt	
10	Vorschubschraubstock gespannt	
9	NON-AUS Taste	
8	STOP des automatischen Zyklus	
7	START des automatischen Zyklus	
6	Manuelles bedienen aktiviert	Material anwesend - Vorschubschraub.
5	Automatisches Bedienen aktiviert	Microniser aktiviert
4	Schutz des Sägebandantriebes OK	Kühlmittelpumpe aktiviert
3	Schutz der Hydraulikpumpe OK	Sicherheitsschaltung verbunden
2	Schutz des Spänförderers OK	
1	Schutz der Kühlmittelpumpe OK	

	CPU - Ausgabe - Einheitsstand
12	Versorgung 5V
11	Versorgung 5V - KOM
10	Intern CAN - TXD
9	Intern CAN - RXD
8	Extern CAN - TXD
7	Extern CAN - RXD
6	
5	
4	Vorschub in der gewünschten Position
3	Vorschubregulierung aktiv
2	Vorschub nach hinten
1	Vorschub nach vorne

17

BOMAR, s.r.o.
Těžební 1236/1
CZ 627 00, Brno

Stroj/Machine/Maschine: Ergonomic 290.250 GAC

Název stránky/Name page/Name seiten: LED Standanzeige

Číslo dok./Doc.No/Anzahl der Dokumente.:	ES-2300-203-V1.1
Napájení/Power supply/Einspeisung:	3x230V + PE / 50Hz
Zpracoval/Processed /Hat verarbeitet:	Ing.Kostka
Datum/Date/Datum:	22.4.2016

List/Page/Seite: 18
List/Pages/Seiten: 21

6.1.4. Ergonomic 290.250 GAC s frekvenčním měničem 3x230V+PE, 50Hz

Obsah / Table of contents / Inhalt

Strana Page Seite	Název strany Page name Seitenname	Datum Date Datum
1	Úvodní strana / Start page / Startseite	22.4.2016
2	Obsah / Content / Inhalt	20.5.2016
3	Kusovník artiklů / Parts list / Artikelstückliste	20.5.2016
3.a	Kusovník artiklů / Parts list / Artikelstückliste	20.5.2016
3.b	Kusovník artiklů / Parts list / Artikelstückliste	20.5.2016
3.c	Kusovník artiklů / Parts list / Artikelstückliste	20.5.2016
3.d	Kusovník artiklů / Parts list / Artikelstückliste	20.5.2016
4	Rozmístění prvků v rozvaděči R1 / Placement of elements in enclosure R1 / Platzierung der Elemente im Schaltschrank R1	25.4.2016
5	Ovládací panel na rozvaděči / Control panel / Badienpult	22.4.2016
6	Silová část / Power part / Netzteil	25.4.2016
7	Připojení pohonů / Drivings connection / Antriebsanschlub	25.4.2016
8	Pohon pilového pásu / Saw belt drive / Saw Riemenantrieb	25.4.2016
9	Propojení napájecích obvodů / Feeding circuits / Stromversorgungsgebiede	25.4.2016
10	Stýkače / Contactors / Schütze	25.4.2016
11	Signály spouštěčů, klávesnice / Signal of shields, keyboard / Schaltersignal, Tastatursignal	25.4.2016
12	Hydraulika / Hydraulics / Hydraulik	25.4.2016
13	Signály koncových spínačů / Signals of limit switches / signale der Endschalter	25.4.2016
14	Připojení modulů / Modules connection / Anschluss der Moduln	25.4.2016
15	Bezpečnostní obvod / Safety circuit / Sicherheitsschaltung	25.4.2016
16	Příslušenství / Accessories / Zubehör	25.4.2016
17	Signalizace LED diod	22.4.2016
18	Description of the LED diodes signalization	22.4.2016
19	LED Standanzeige	22.4.2016

Kusovník artiklů / Parts list / Stückliste

Označení přístroje Device identification Geräteidentifikation	Typ přístroje Device description Gerätebeschreibung	Objednací číslo Type number Typennummer	Výrobce Manufacturer Hersteller	Skladové číslo Part number Lagernummer	Množství Quantity Menge	Umístění Location Stelle
-BM1	Bezpečnostní relé 24VDC, 3NO Safety relay 24VDC, 3NO Sicherheitsrelais 24VDC, 3NO	BT50	ABB	91.051.063	1	/15.145
-FA1	Motorový spouštěč - 0.63A Motor starter - 0.63A Motorstarter - 0.63A	MS116-0,63	ABB	91.045.018	1	/7.62
-FA1	Pomocné kontakty - 1xNO+1xNC Auxiliary contacts - 1xNO+1xNC Hilfskontakte - 1xNO+1xNC	HKF1-11	ABB	91.046.002	1	/7.62
-FA2	Motorový spouštěč - 1.6A Motor starter - 1.6A Motorstarter - 1.6A	MS116-1,6	ABB	91.045.020	1	/7.64
-FA2	Pomocné kontakty - 1xNO+1xNC Auxiliary contacts - 1xNO+1xNC Hilfskontakte - 1xNO+1xNC	HKF1-11	ABB	91.046.002	1	/7.64
-FA3	Motorový spouštěč - 6.3A Motor starter - 6.3A Motorstarter - 6.3A	MS116-6,3	ABB	91.045.023	1	/7.67
-FA3	Pomocné kontakty - 1xNO+1xNC Auxiliary contacts - 1xNO+1xNC Hilfskontakte - 1xNO+1xNC	HKF1-11	ABB	91.046.002	1	/7.67
-KM1	Ministýkač 4kW/400V Minicontactor 4kW/400V Minischutz 4kW/400V	B6S-30-01-1.7-71	ABB	91.040.049	1	/10.93
-KM2	Ministýkač 4kW/400V Minicontactor 4kW/400V Minischutz 4kW/400V	B6S-30-01-1.7-71	ABB	91.040.049	1	/10.94
-KM3	Ministýkač 4kW/400V Minicontactor 4kW/400V Minischutz 4kW/400V	B6S-30-01-1.7-71	ABB	91.040.049	1	/10.96
-KM11	Ministýkač 4kW/400V Minicontactor 4kW/400V Minischutz 4kW/400V	B6S-30-01-1.7-71	ABB	91.040.049	1	/15.147
-KM11	Pomocné kontakty - 1xNO+1xNC Auxiliary contacts - 1xNO+1xNC Hilfskontakte - 1xNO+1xNC	CAF 6-11M	ABB	91.041.042	1	/15.147

The manufacturer reserves right to use an equivalent replacement device.

2

BOMAR, s.r.o.
Těžební 1236/1
CZ 627 00, Brno

Stroj/Machine/Maschine: Ergonomic 290.250 GAC FM

Název stránky/Name page/Name seiten: Kusovník artiklů / Parts list / Artikelstückliste

Číslo dok./Doc.No/Anzahl der Dokumente.:	ES-2300F-203-V1.1	List/Page/Seite: 3
Napájení/Power supply/Einspeisung:	3x230V + PE / 50Hz	
Zpracoval/Processed /Hat verarbeitet:	Ing.Kostka	Listů/Pages/Seiten: 23
Datum/Date/Datum:	20.5.2016	

Kusovník artiklů / Parts list / Stückliste

Označení přístroje Device identification Geräteidentifikation	Typ přístroje Device description Gerätebeschreibung	Objednací číslo Type number Typennummer	Výrobce Manufacturer Hersteller	Skladové číslo Part number Lagernummer	Množství Quantity Menge	Umístění Location Stelle
-KM12	Ministýkač 4kW/400V Minicontactor 4kW/400V Minischutz 4kW/400V	B6S-30-01-1.7-71	ABB	91.040.049	1	/15.148
-KM12	Pomocné kontakty - 1xNO+1xNC Auxiliary contacts - 1xNO+1xNC Hilfskontakte - 1xNO+1xNC	CAF 6-11M	ABB	91.041.042	1	/15.148
-PA1	Pojistkový odpínač pro válcové vložky - 3P Switch fuse for the cylinder inserts - 3P Schalter Sicherung für den Zylindereinsätze - 3P	E93/32	ABB	91.241.014	1	/8.71
-PA2	Pojistkový odpojovač E-90 - 2P Fuse disconnector E-90 - 2P Sicherungstrenner E90 - 2P	E 92/32	ABB	91.241.013	1	/9.84
-QS1	3 pólový odpínač, 16A Disconnector - 3P, 16A Trenner - 3P, 16A	OT16F3	ABB	91.170.015	1	/6.50
-RE1	Patice pro relé Relay socket Relaissockel	CR-PSS	ABB	91.051.048	1	/12.119
-RE1	Paticové relé CR-P Plug-in relay CR-P Stecken Sie in Relais CR-P	CR-P024DC2	ABB	91.051.049	1	/12.119
-A1.1	Sestavený modul CPU2-E (UNIVERZALNI) Assembled module CPU2-E (UNIVERSAL) Montiert Modul CPU2-E (UNIVERSAL)	CPU2-E	Bomar	266.222	1	/14.136
-A3.1	Sestavený modul JDI-2/2 Assembled module JDI-2/2 náhrada za 91.995.039	JDI-2/2	Bomar	266.216	1	/14.133
-A5.1	Sestavený modul JDO-2/0 (plně osazený) Assembled module JDO-2/0 (fully manned) náhrada za 91.995.040	JDO-2/0	Bomar	266.224	1	/14.130
-DKL	Sestavený modul DKL-F5 (display) Assembled module DKL-F5 (display) náhrada za 91.995.048	DKL-F5	Bomar	266.219	1	/14.138
-DM1	Výrobek-deska OCHRANA3 Product-board OCHRANA3 Produkt-board OCHRANA 3	OCHR3	Bomar	266.255	1	/9.83

The manufacturer reserves right to use an equivalent replacement device.

3

BOMAR, s.r.o.
Těžební 1236/1
CZ 627 00, Brno

Stroj/Machine/Maschine: Ergonomic 290.250 GAC FM

Název stránky/Name page/Name seiten: Kusovník artiklů / Parts list / Artikelstückliste

Číslo dok./Doc.No/Anzahl der Dokumente.:	ES-2300F-203-V1.1	List/Page/Seite: 3.a
Napájení/Power supply/Einspeisung:	3x230V + PE / 50Hz	
Zpracoval/Processed /Hat verarbeitet:	Ing.Kostka	List/Pages/Seiten: 23
Datum/Date/Datum:	20.5.2016	

Kusovník artiklů / Parts list / Stückliste

Označení přístroje Device identification Geräteidentifikation	Typ přístroje Device description Gerätebeschreibung	Objednací číslo Type number Typennummer	Výrobce Manufacturer Hersteller	Skladové číslo Part number Lagernummer	Množství Quantity Menge	Umístění Location Stelle
-FU1	Pojistka trubičková - 1A/250V, pomalá, 5x20 Tube fuse - 1A/250V, slow, 5x20 Rohrsicherung - 1A / 250V, langsam, 5x20	T1A/250V	ESKA	91.230.031	1	/9.85
-FU2	Pojistka trubičková - 6,3A/250V, pomalá, 5x20 Tube fuse - 6,3A/250V, slow, 5x20 Rohrsicherung - T6,3A / 250V, langsam, 5x20	T6,3A/250V	ESKA	91.230.002	1	/9.84
-RP1	Potenciometr 4k7 Potenciometer 4k7 Potentiometer 4k7	TP195 4k7/N20A	Elektronické součástky CZ, a.s	91.283.015	1	/8.75
-RP1	Hlavice potenciometru - 24mm Head of potentiometer 24mm Leiter Potentiometer 24mm	S8877 BLK	GES-ELECTRONICS, a.s.	91.060.063	1	/8.75
-SB500	Total stop - hlavice + 3xNC Emergency-stop mushroom push - button + 3xNC Not-Aus-Pilz - Taster + 3 xNC	YW1B-V4E02R	IDEC	91.060.084	1	/15.144
-SB500	Kontakt - 1x NO Contact - 1x NO Kontakt - 1x NO	YW-E10	IDEC	91.061.044	1	/15.144
-RCF1	Filtr RFC vývodový Efferent RFC filter Ableitenden RFC Filter	FBOPR1624	Ing. Miroslav Vlček	91.041.015	1	/7.61
-RCF2	Filtr RFC vývodový Efferent RFC filter Ableitenden RFC Filter	FBOPR1624	Ing. Miroslav Vlček	91.041.015	1	/7.63
-RCF3	Filtr RFC vývodový Efferent RFC filter Ableitenden RFC Filter	FBOPR1624	Ing. Miroslav Vlček	91.041.015	1	/7.66
-RCF11	Filtr RFC vývodový Efferent RFC filter Ableitenden RFC Filter	FBOPR1624	Ing. Miroslav Vlček	91.041.015	1	/6.56
-RCF12	Filtr RFC vývodový Efferent RFC filter Ableitenden RFC Filter	FBOPR1624	Ing. Miroslav Vlček	91.041.015	1	/6.57
-SQ21	Bezpečnostní koncový spínač - 2xNC Safety Limit Switch - 2x NC Sicherheitsendschalter - 2x NC	QKS8	KEDU	91.173.012	1	/15.144

The manufacturer reserves right to use an equivalent replacement device.

3.a

Kusovník artiklů / Parts list / Stückliste

Označení přístroje Device identification Geräteidentifikation	Typ přístroje Device description Gerätebeschreibung	Objednací číslo Type number Typennummer	Výrobce Manufacturer Hersteller	Skladové číslo Part number Lagernummer	Množství Quantity Menge	Umístění Location Stelle
-SQ22	Bezpečnostní koncový spínač - 2xNC Safety Limit Switch - 2x NC Sicherheitsendschalter - 2x NC	QKS8	KEDU	91.173.012	1	/15.142
-PA1	Pojistka válcová - 10A, 10x38, rychlá Tube fuse - 10A, 10x38, fast Rohrsicherung - 10A, 10x38, schnell	PV10 10A gG	OEZ	91.231.008	3	/8.71
-PA2	Pojistka válcová - 1A, 10x38, pomalá Tube fuse - 1A, 10x38, slow Rohrsicherung - 1A, 10x38, langsam	PV10 1A aM	OEZ	91.231.001	2	/9.84
-SA1	SPÍNAČ ČERNÝ 3 polohy - Harmony Switch black 3 positions - Harmony Schalter schwarz 3 Positionen - Harmony	ZB5-AD3	TELEMECANIQUE	91.060.024	1	/11.104
-SA2	SPÍNAČ ČERNÝ 3 polohy - Harmony Switch black 3 positions - Harmony Schalter schwarz 3 Positionen - Harmony	ZB5-AD3	TELEMECANIQUE	91.060.024	1	/11.107
-SB1	hlavice zelená prosvětlená - Harmony Head green backlit - Harmony Kopf grün Hintergrundbeleuchtung - Harmony	ZB5AW33	TELEMECANIQUE	91.060.019	1	/11.105
-SB2	Hlavice tlačítka černá Button black head Taste Mitesser	ZB5AA2	TELEMECANIQUE	91.060.013	1	/11.106
-SB501	Hlavice prosvětleného tlačítka žlutá The button head backlit yellow Der Knopf Kopf von hinten beleuchtet gelb	ZB5AW35	TELEMECANIQUE	91.060.023	1	/15.146
-FM1	Frekvenční měnič - 2.2kW, 3x230V Frequency inverter - 2.2kW, 3x230V Frequenzumrichter - 2.2kW, 3x230V	VACON0010-3L-0011-2	VACON	91.012.067	1	/8.71
-RCF0	Vstupní odrušovací filtr 16A Input noise filter 16A Eingangsrauschfilter 16A	16EB15/50	WIDECOM TECHNOLOGY s.r.o.	91.041.062	1	/6.51
-FU1	Svorka pojistková Fuse terminal Sicherungsklemme	WK4/THSI5U	WIELAND	91.251.102	1	/9.85

The manufacturer reserves right to use an equivalent replacement device.

3.b

Kusovník artiklů / Parts list / Stückliste

Označení přístroje Device identification Geräteidentifikation	Typ přístroje Device description Gerätebeschreibung	Objednací číslo Type number Typennummer	Výrobce Manufacturer Hersteller	Skladové číslo Part number Lagernummer	Množství Quantity Menge	Umístění Location Stelle
-FU2	Svorka pojistková Fuse terminal Sicherungsklemme	WK4/THSI5U	WIELAND	91.251.102	1	/9.84

The manufacturer reserves right to use an equivalent replacement device.

3.c

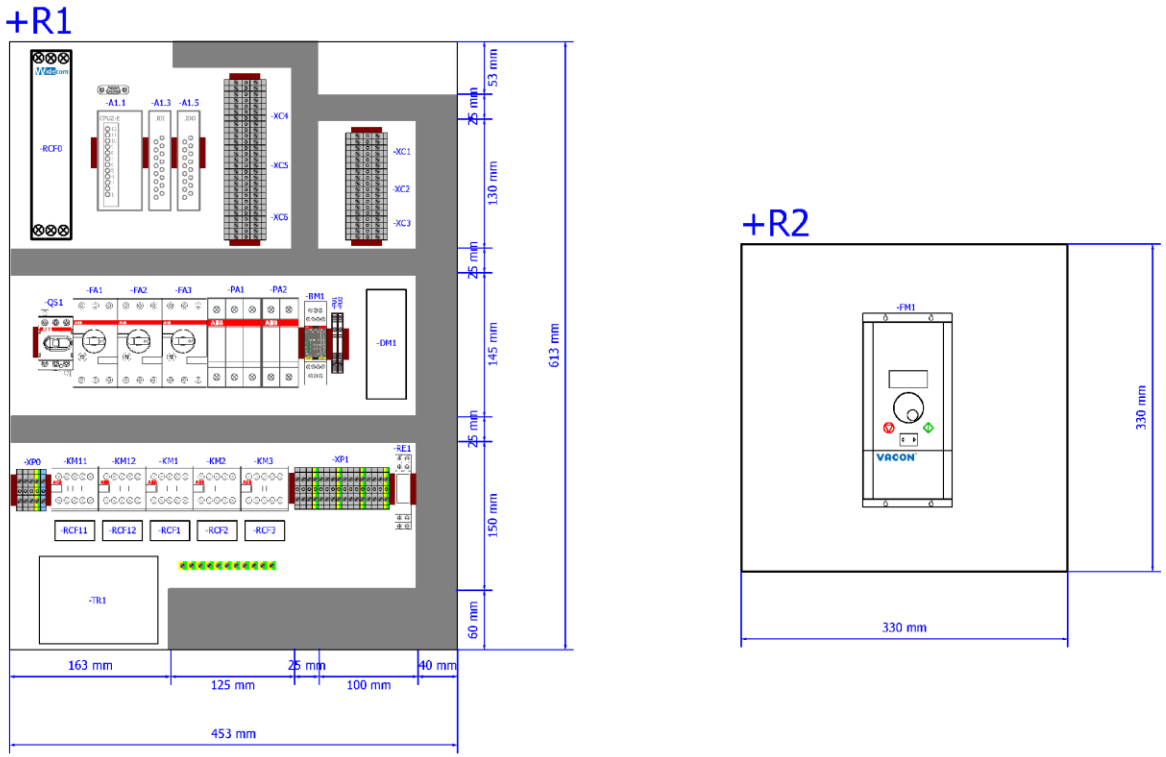

3.d

BOMAR, s.r.o. Těžební 1236/1 CZ 627 00, Brno	Stroj/Machine/Maschine: Ergonomic 290.250 GAC FM	Název stránky/Name page/Name seiten: Rozmístění prvků v rozvaděči R1 / Placement of elements in enclosure R1 / Platzierung der Elemente im Schaltschrank R1	Číslo dok./Doc.No/Anzahl der Dokumente.:	ES-2300F-203-V1.1	List/Page/Seite: 4
			Napájení/Power supply/Einspeisung:	3x230V + PE / 50Hz	Listů/Pages/Seiten: 23
			Zpracoval/Processed /Hat verarbeitet:	Ing.Kostka	
			Datum/Date/Datum:	25.4.2016	

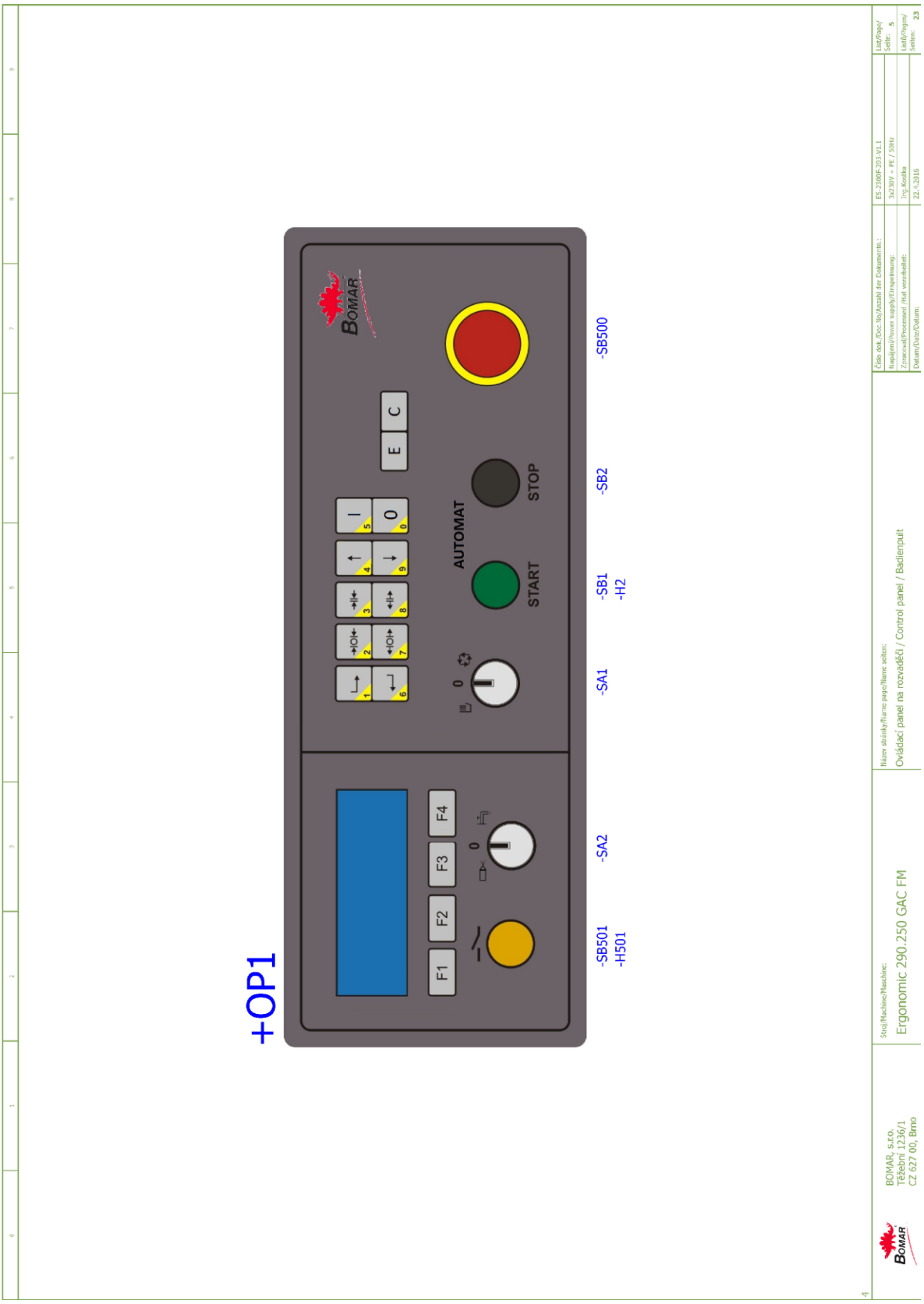
+OP1
F1
F2
F3
F4
-SB501
-H501
-SA2
-SA1
AUTOMAT
START
STOP
-SB1
-H2
-SB2
-SB500
E
C
BOMAR
Číslo dok./Doc. No./Anzahl der Dokumente:
ES 2300F-203-V1.1
List/Page/Seite: 5
Napájení/Power supply/Einspeisung:
3x230V + PE / 50Hz
Zpracoval/Processed / Hat verarbeitet:
Ing. Kordík
List/Pages/Seiten: 23
Datum/Date/Datum:
22.4.2016
Název zásuvky/Name page/Name seiten:
Ovládací panel na rozvaděči / Control panel / Badienpult
Stroj/Machine/Maschine:
Ergonomic 290.250 GAC FM
BOMAR, s.r.o.
Těšetín 1236/1
CZ 627 00, Brno

Schémata
Schemas
Schematics

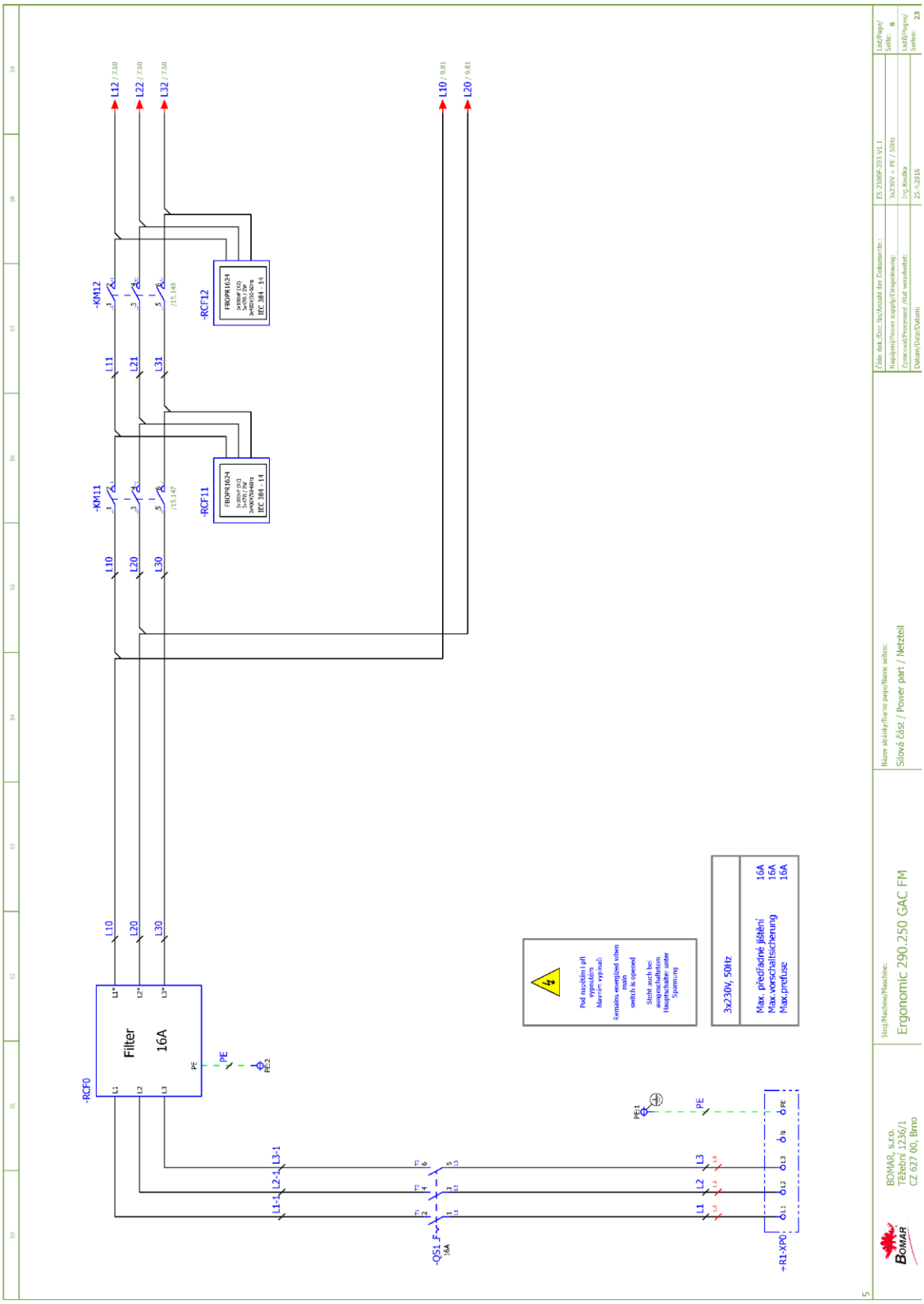

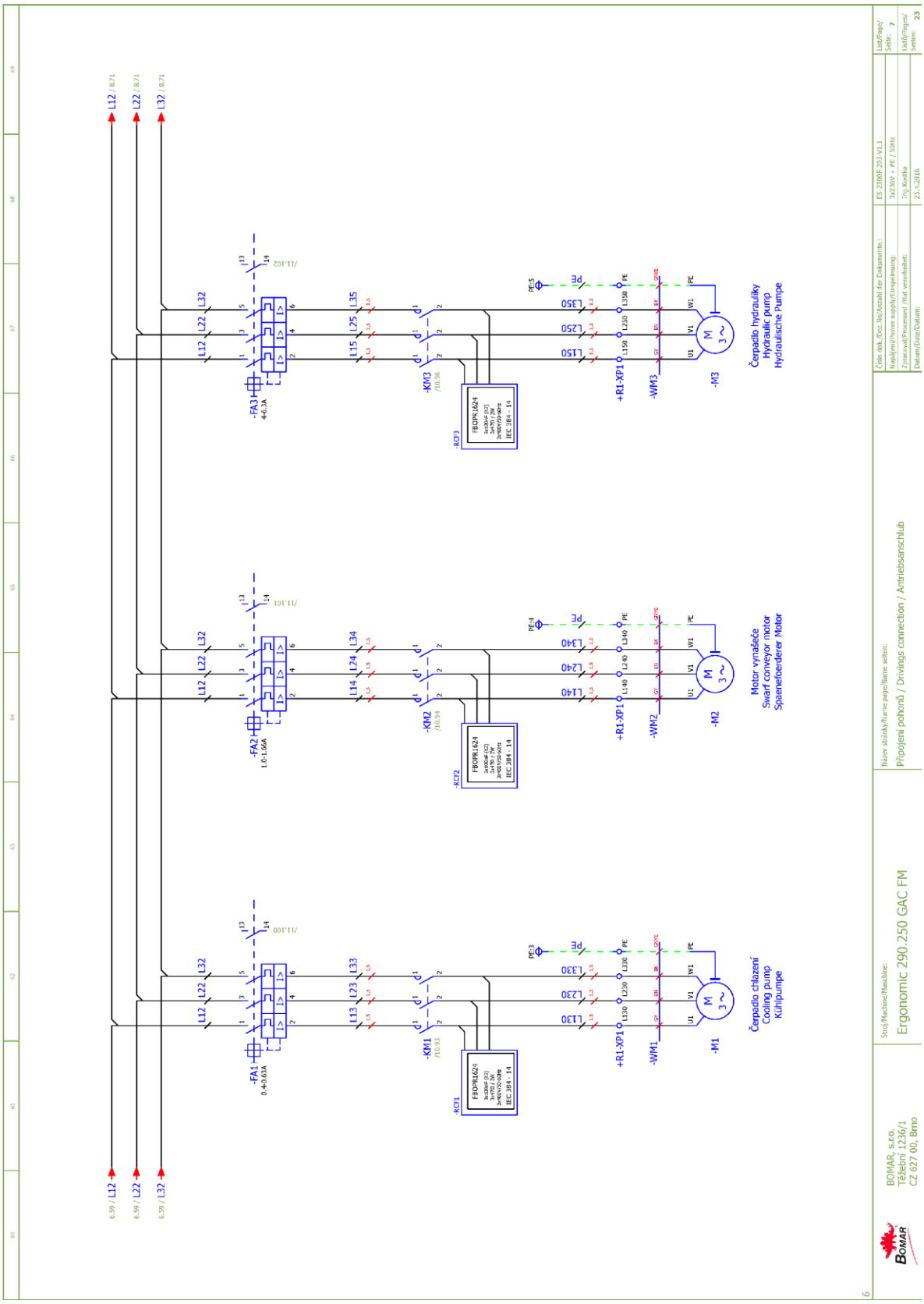
L12 / 8.71
L22 / 8.71
L32 / 8.71
6.59 / L12
6.59 / L22
6.59 / L32
-FA1
0,4-0,63A
-FA2
1,0-1,6A
-FA3
4-6,3A
-KM1
-KM2
-KM3
-KF1
-KF2
-KF3
FBQPK1624
IEC 394 - 14
+R1-XP1
-WM1
-WM2
-WM3
-M1
-M2
-M3
Čerpadlo chlazení
Cooling pump
Kühlpumpe
Motor vynašeče
Swarf conveyor motor
Spaneförderer Motor
Čerpadlo hydrauliky
Hydraulic pump
Hydraulische Pumpe
BOMAR, s.r.o.
Těšeňní 1236/1
CZ 627 00, Brno
Stroj/Machine/Maschine:
Ergonomic 290.250 GAC FM
Název skelnky/Name page/Name seiten:
Připojení pohonů / Drivings connection / Antriebsanschlüsse
Číslo dok./Doc.No./Anzahl der Dokumente:
ES 2300F-203-V1.1
Napájení/Power supply/Einspeisung:
3x230V + PE / 50Hz
Zpracoval/Processed/Hat verarbeitet:
Ing.Kordík
Datum/Date/Datum:
25.4.2016
List/Page/Seite: 7
List/Pages/Seiten: 23

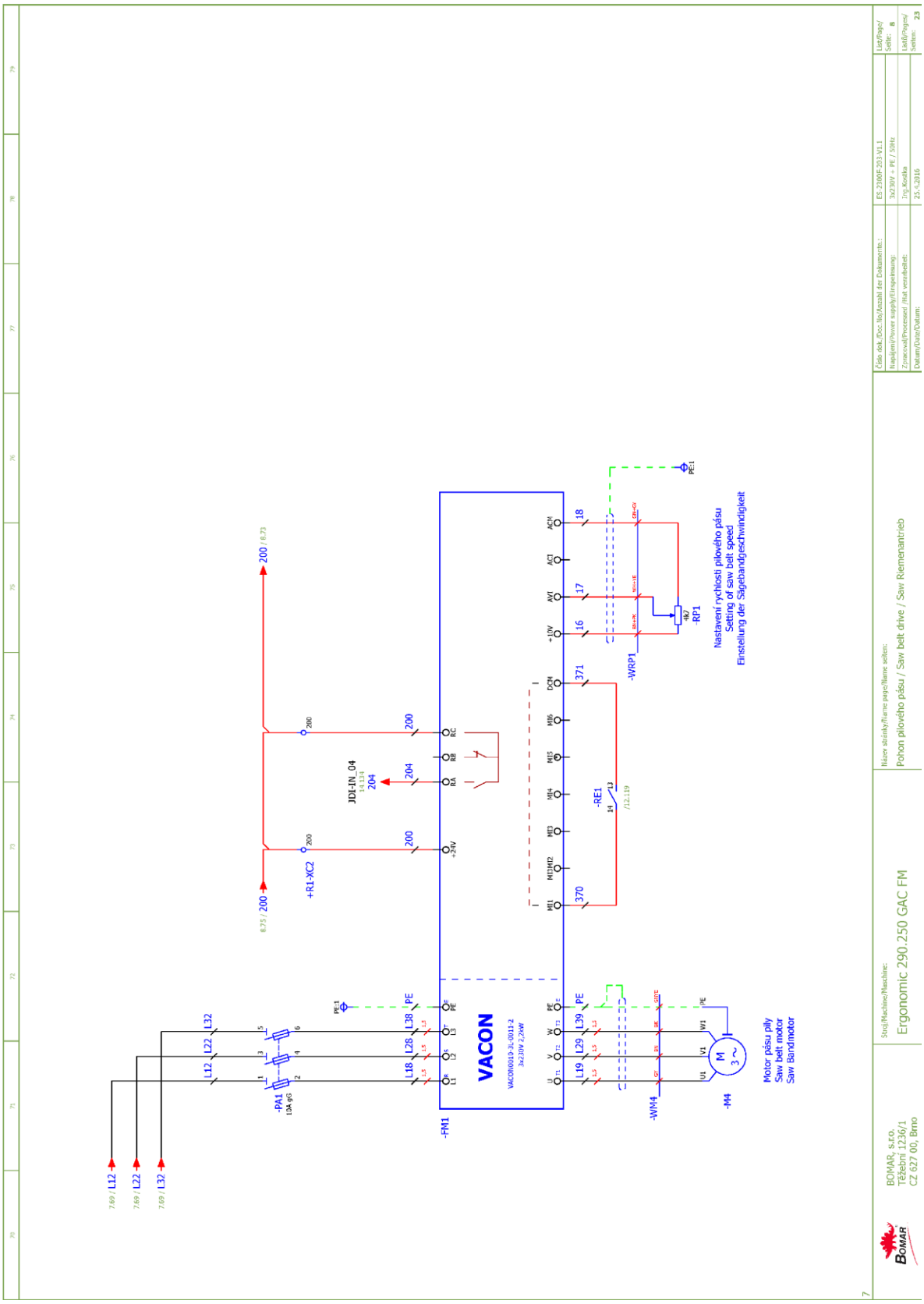
VACON
VACON0010-3L-0011-2
3x230V 2.2kW
-FM1
-PA1
10A gG
+R1-XC2
JDI-IN_04
-RE1
-RP1
4k7
-WRP1
-WM4
-FM4
M
3 ~
Motor pásu pily
Saw belt motor
Saw Bandmotor
Nastavení rychlosti pilového pásu
Setting of saw belt speed
Einstellung der Sägebandgeschwindigkeit
Název stránky/Name page/Name seiten:
Pohon pilového pásu / Saw belt drive / Saw Riemenantrieb
Stroj/Machine/Maschine:
Ergonomic 290.250 GAC FM
BOMAR, s.r.o.
Těšeňní 1236/1
CZ 627 00, Brno
ES 2300F-203-V1.1
3x230V + PE / 50Hz
Ing. Kocka
25.4.2016
List/Page/Seite: 8
List/Pages/Seiten: 23

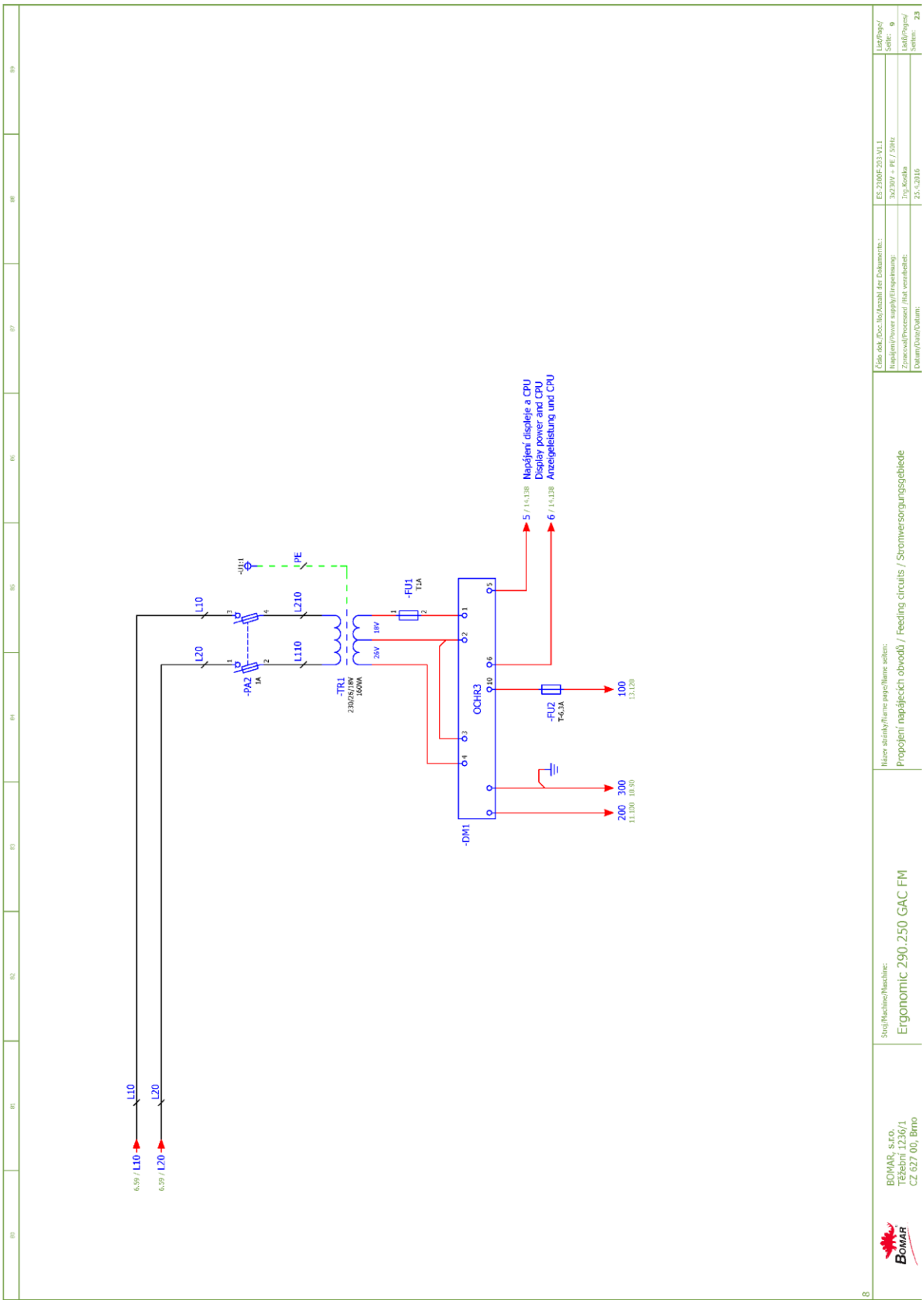
L10
L20
6.59 / L10
6.59 / L20
-PA2
1A
L110
L210
-UI1
PE
-TR1
230/26/18V
100VA
26V
18V
-FU1
T1A
-DM1
OCHR3
-FU2
T-6,3A
5 / 14.138 Napájení displeje a CPU
Display power and CPU
Anzeigeleistung und CPU
6 / 14.138
100
13.128
200 300
11.130 10.90
BOMAR, s.r.o.
Těšínní 1236/1
CZ 627 00, Brno
Stroj/Machine/Maschine:
Ergonomic 290.250 GAC FM
Název zásuvky/Name page/Name seiten:
Propojení napájecích obvodů / Feeding circuits / Stromversorgungsgebiede
Číslo dok./Doc.No/Anzahl der Dokumente:
ES 2300F-203-V1.1
Napájení/Power supply/Einspeisung:
3x230V + PE / 50Hz
Zpracoval/Processed/ /Hat verarbeitet:
Ing.Kocka
Datum/Date/Datum:
25.4.2016
List/Page/Seite: 9
List8/Pages/Seiten: 23

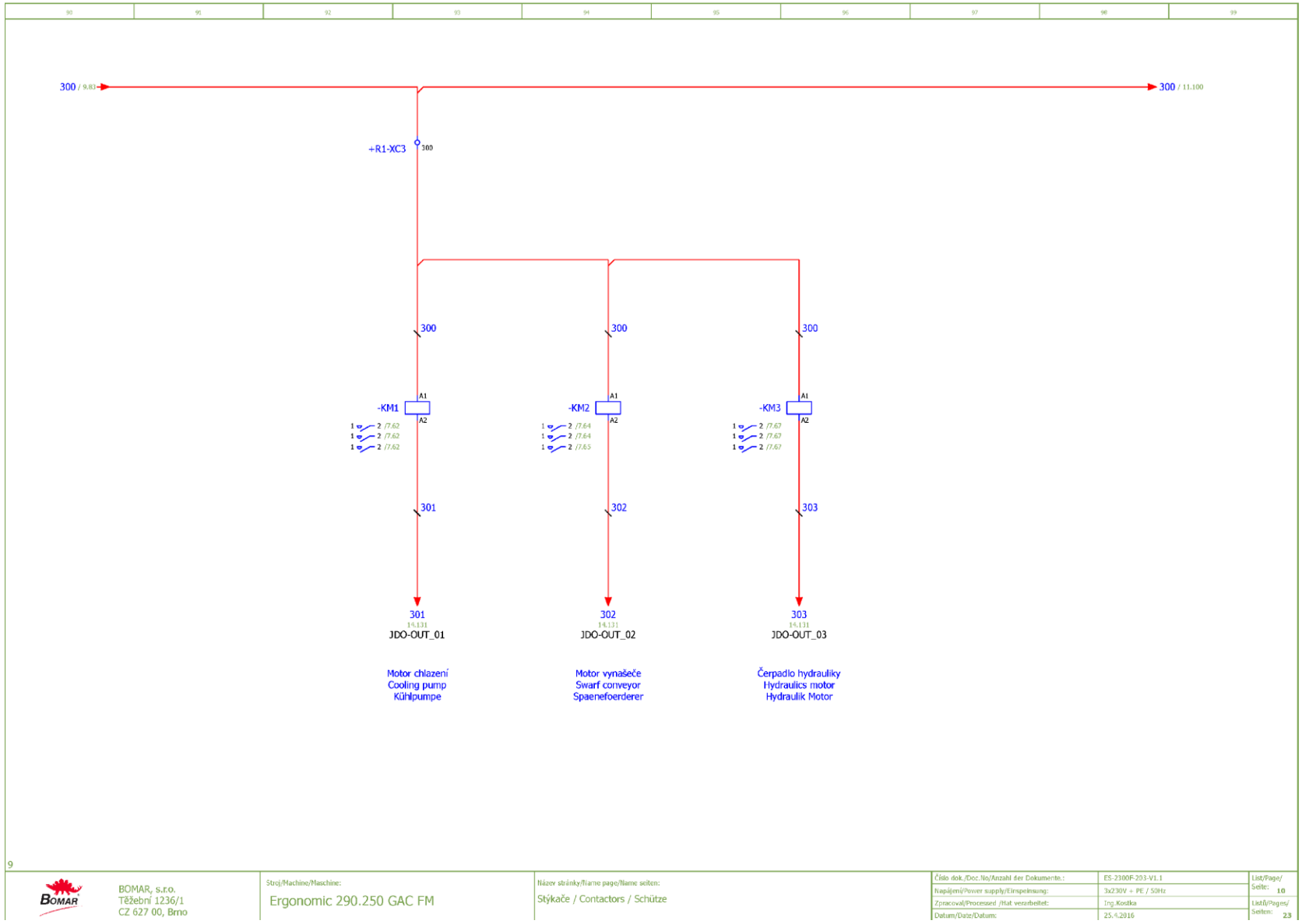

Schémata
Schemas
Schematics

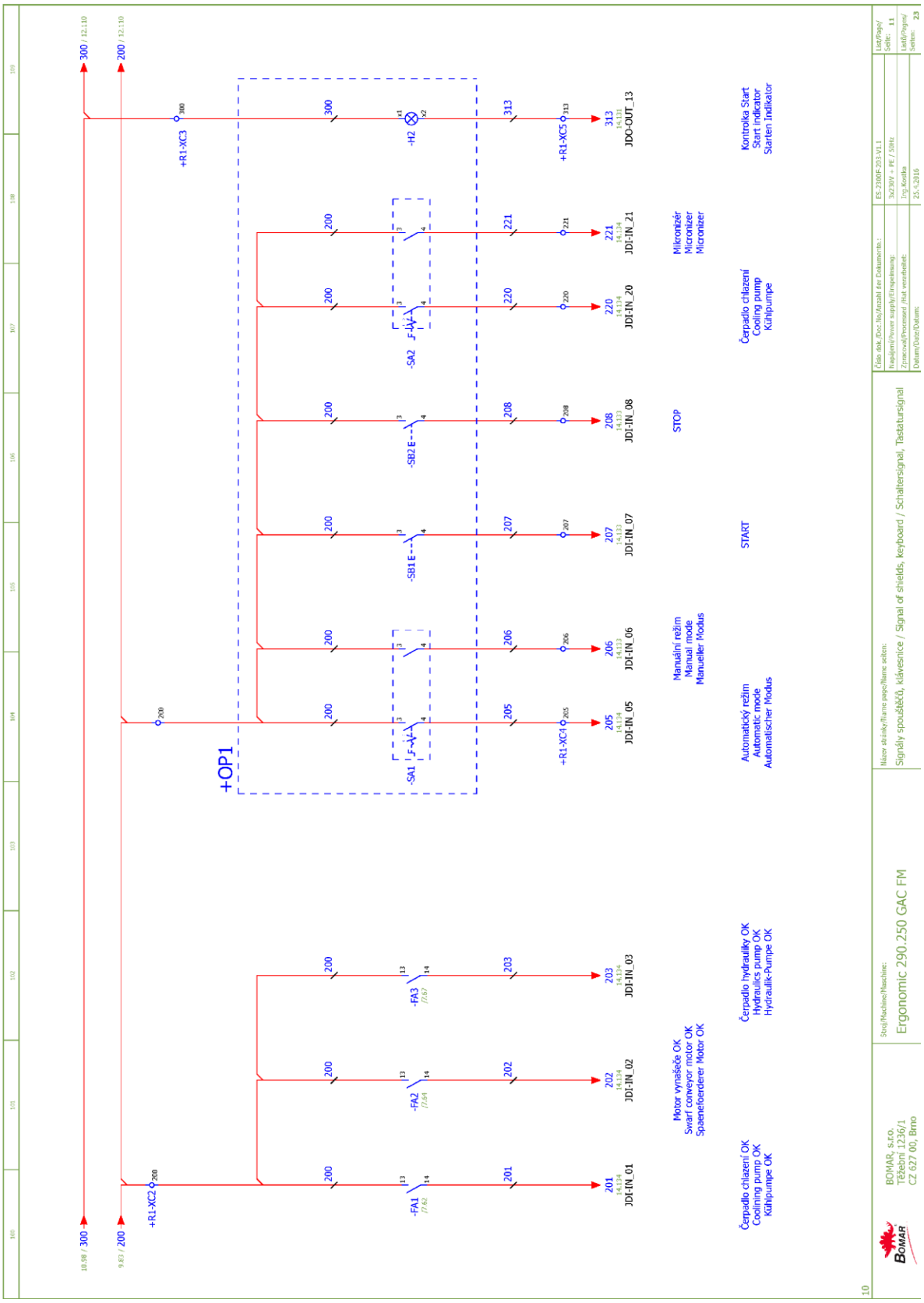
+OP1
JDI-IN_01
JDI-IN_02
JDI-IN_03
JDI-IN_05
JDI-IN_06
JDI-IN_07
JDI-IN_08
JDI-IN_20
JDI-IN_21
JDO-OUT_13
Motor vynašeče OK
Svaří conveyor motor OK
Spaeneforderer Motor OK
Čerpadlo hydrauliky OK
Hydraulics pump OK
Hydraulik-Pumpe OK
Čerpadlo chlazení OK
Cooling pump OK
Kühlpumpe OK
Manuální režim
Manual mode
Manueller Modus
STOP
START
Automatický režim
Automatic mode
Automatischer Modus
Mikronizér
Micronizer
Micronizer
Čerpadlo chlazení
Cooling pump
Kühlpumpe
Kontrolka Start
Start indicator
Starten Indikator
Stroj/Machine/Maschine:
Ergonomic 290.250 GAC FM
BOMAR, s.r.o.
Těžební 1236/1
CZ 627 00, Brno

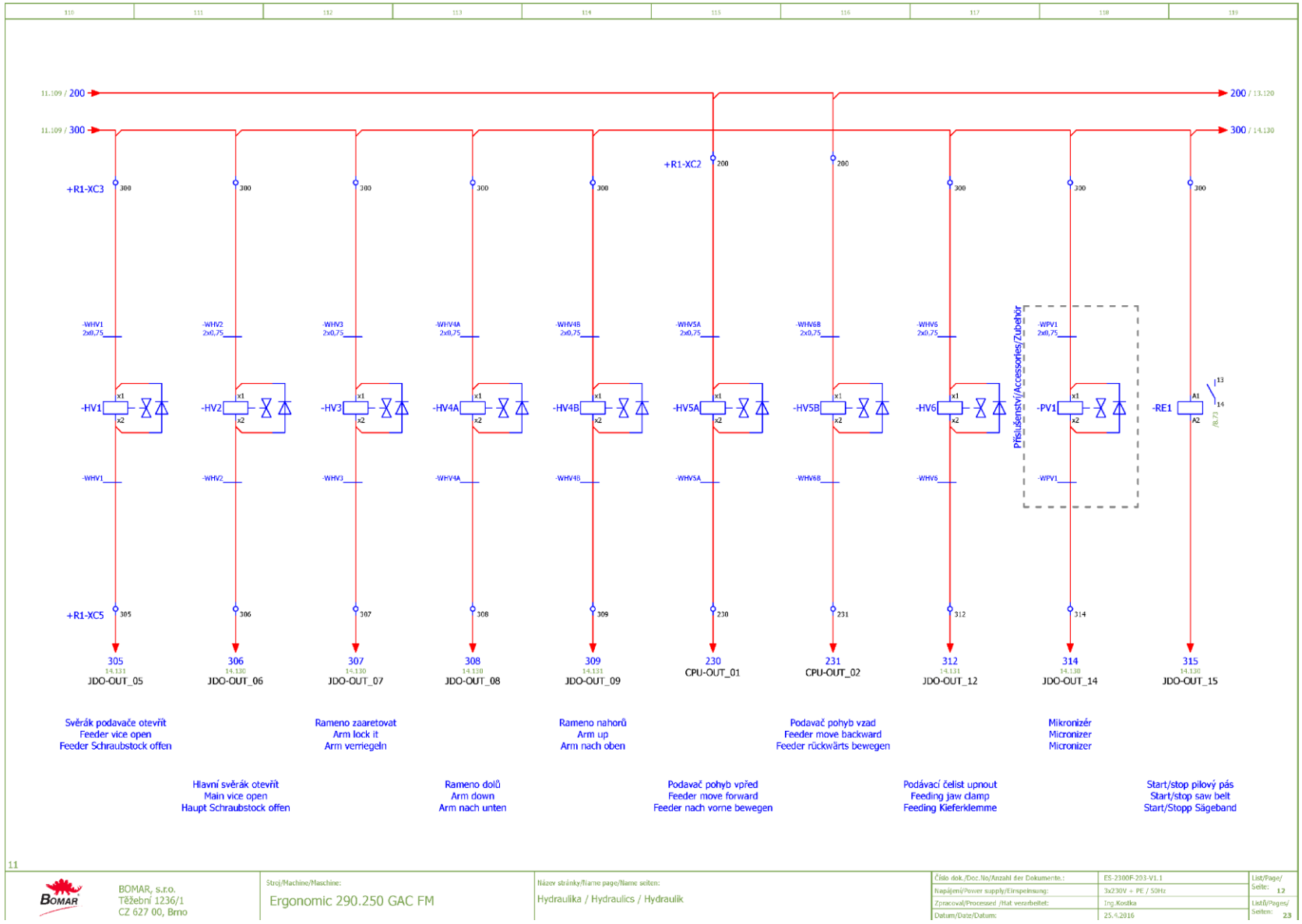

Schémata
Schemas
Schematics

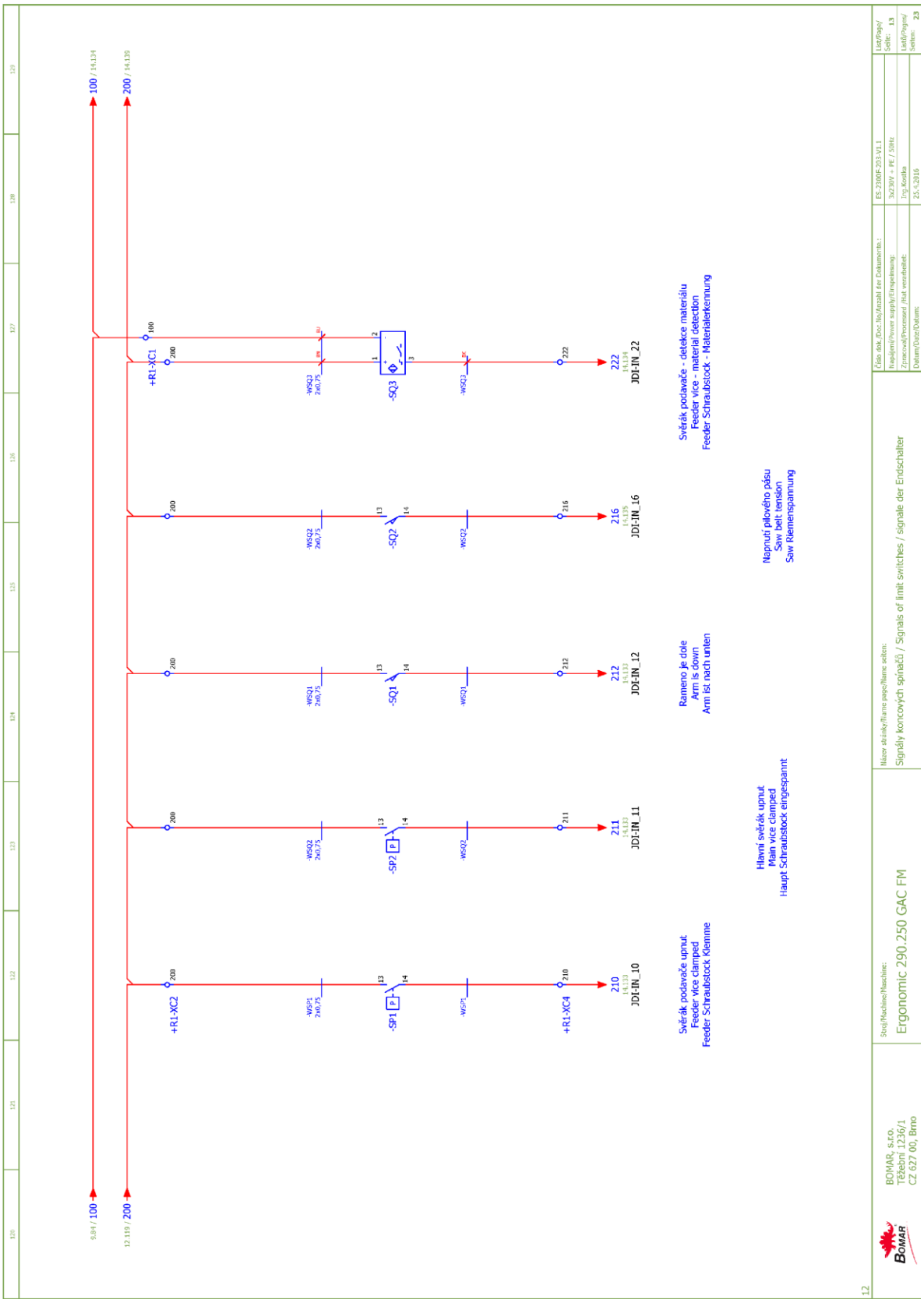
100 / 14.134
200 / 14.139
9.84 / 100
12.119 / 200
+R1-XC1
+R1-XC2
+R1-XC4
-WSP1 2x0,75
-WSP2 2x0,75
-WSQ1 2x0,75
-WSQ2 2x0,75
-WSQ3 2x0,75
-SP1
-SP2
-SQ1
-SQ2
-SQ3
-WSP1
-WSP2
-WSQ1
-WSQ2
-WSQ3
210 14.133 JDI-IN_10
211 14.133 JDI-IN_11
212 14.133 JDI-IN_12
216 14.135 JDI-IN_16
222 14.134 JDI-IN_22
Svěrák podavače upnut
Feeder vice clamped
Feeder Schraubstock Klemme
Hlavní svěrák upnut
Main vice clamped
Haupt Schraubstock eingespannt
Raneno je dole
Arm is down
Arm ist nach unten
Napnutí pilového pásu
Saw belt tension
Saw Riemenspannung
Svěrák podavače - detekce materiálu
Feeder vice - material detection
Feeder Schraubstock - Materialerkennung
BOMAR, s.r.o.
Těžební 1236/1
CZ 627 00, Brno
Stroj/Machine/Maschine:
Ergonomic 290.250 GAC FM
Název zásuvky/Name page/Name seiten:
Signály koncových spínačů / Signals of limit switches / signale der Endschalter
Číslo dok./Doc.No/Anzahl der Dokumente:
ES 2300F-203-V1.1
Napájení/Power supply/Einspeisung:
3x230V + PE / 50Hz
Zpracoval/Processed /Hat verarbeitet:
Ing.Kordík
Datum/Date/Datum:
25.4.2016
List/Page/Seite: 13
List/Pages/Seiten: 23

Snímač polohy podavače Feeder position sensor Feeder-Positionssensor	
(+)	HNĚDÁ BROUWN BRAUN
(-)	BÍLÁ WHITE WEIS
A	ZELENÁ GREEN GRUN
AN	FIALOVÁ VIOLET VIOLETT
B	ŽLUTÁ YELLOW GELB
BN	ORANŽOVÁ ORANGE ORANGE

Snímač výšky ramene Arm height sensor Arm Höhensensor		
(+)	RUDÁ RED ROT	(HNĚDÁ) (BROWN) (BRAUN)
(-)	MODRÁ BLUE BLAU	(ŠEDÁ) (GREY) (BRAUN)
A	ORANŽOVÁ ORANGE ORANGE	(RŮŽOVÁ) (PINK) (ROSAROT)
AN	FIALOVÁ VIOLET VIOLET	(ZELENÁ) (GREEN) (GRUN)
B	ŽLUTÁ YELLOW GELB	
BN	BÍLÁ WHITE WEIS	

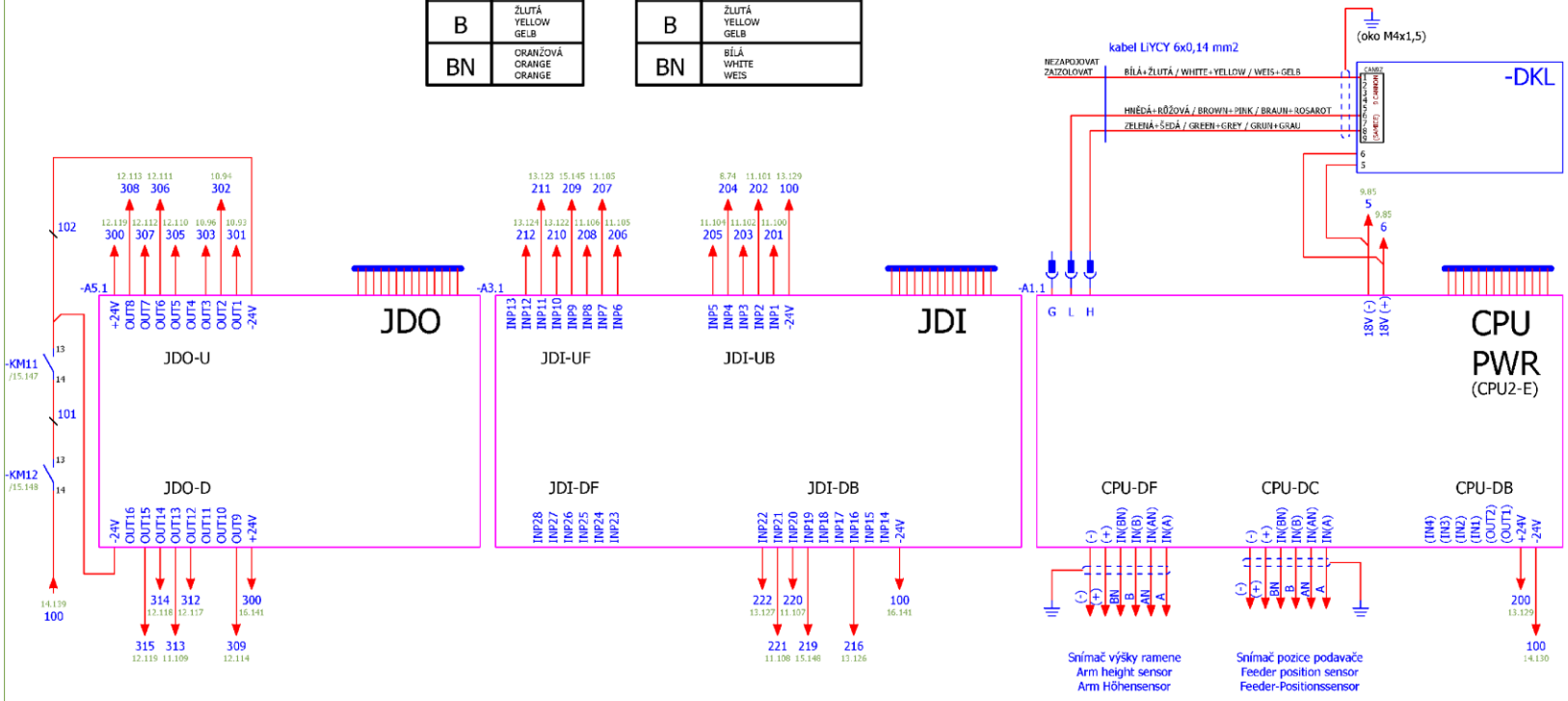

BOMAR, s.r.o. Těžební 1236/1 CZ 627 00, Brno	Stroj/Machine/Maschine: Ergonomic 290.250 GAC FM	Název stránky/Name page/Name seiten: Připojení modulů / Modules connection / Anschluss der Moduln	Číslo dok./Doc.No/Anzahl der Dokumente.: ES-2300F-203-V1.1 Napájení/Power supply/Einspeisung: 3x230V + PE / 50Hz Zpracoval/Processed /Hat verarbeitet: Ing.Kostka Datum/Date/Datum: 25.4.2016 List/Page/Seite: 14 Listů/Pages/Seiten: 23

Schémata
Schemas
Schematics

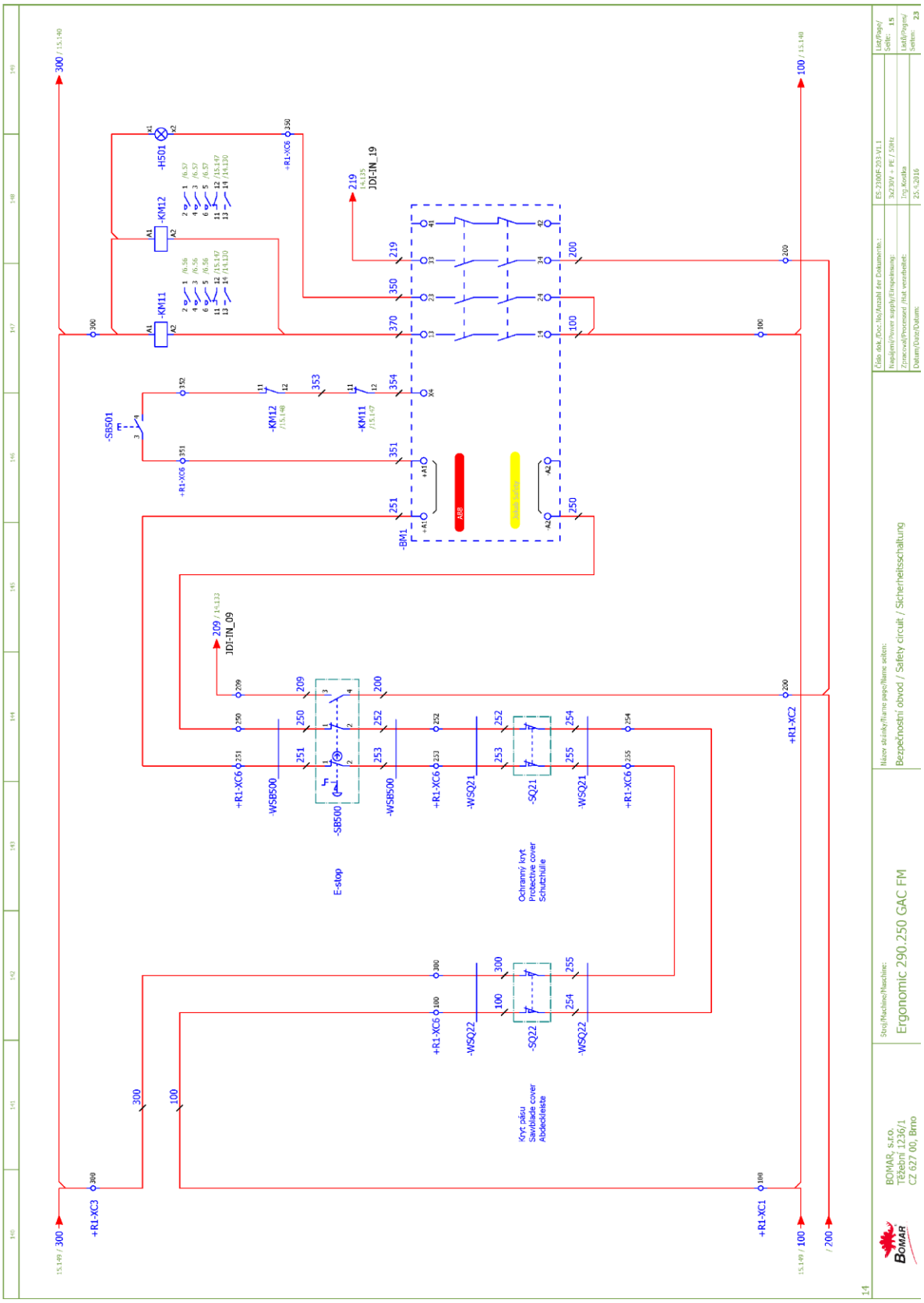

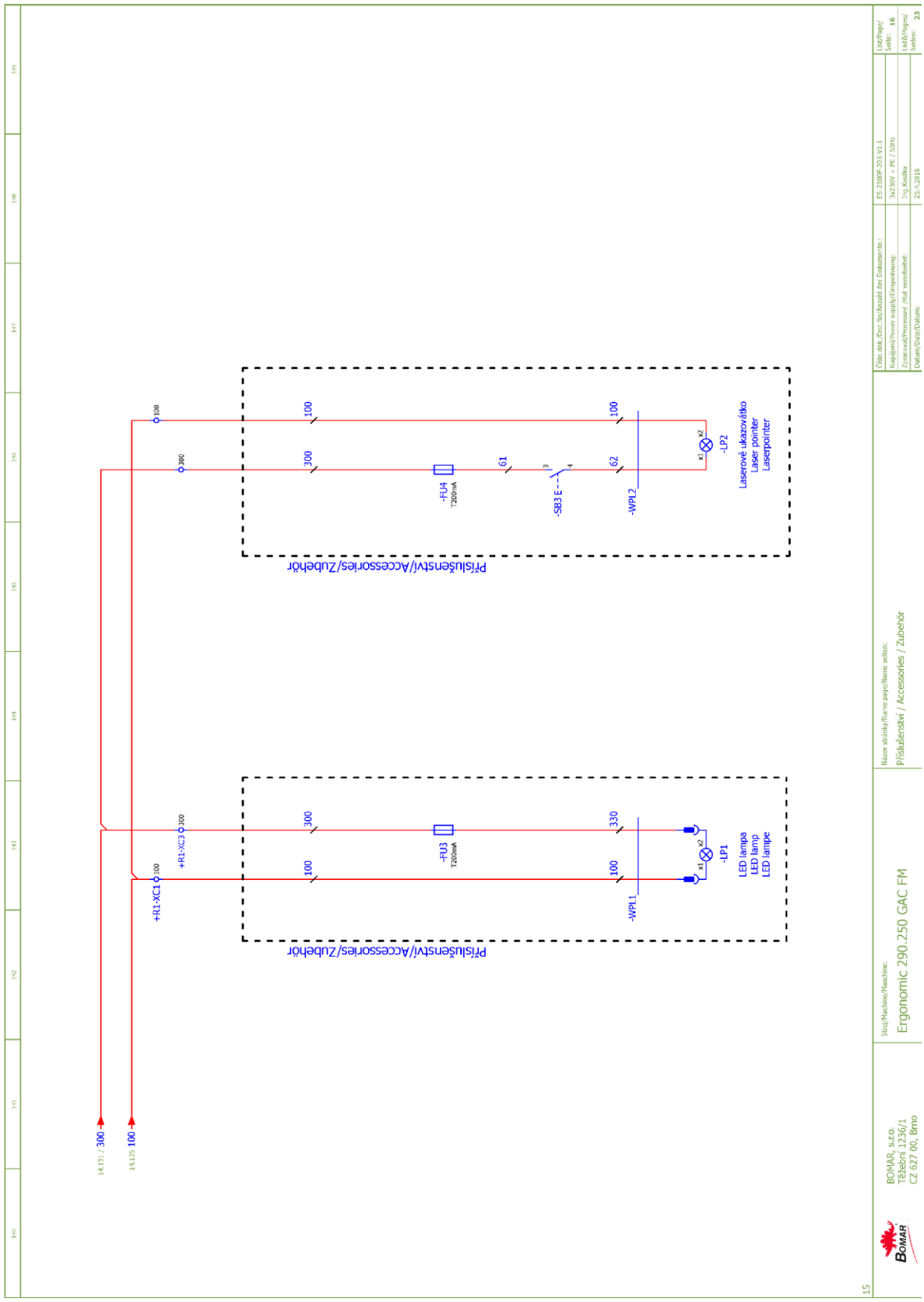

Schémata
Schemas
Schematics

	JDO - Signalizace stavu výstupů
16	
15	Spustit frekvenční měnič
14	Aktivovat mikronizér
13	Aktivovat kontrolku automatického režimu
12	Podávací čelist uplnout
11	
10	
9	Rameno nahoru
8	Rameno dolů
7	Rameno aretovat
6	Otevřít hlavní svěrák
5	Otevřít podávací věrák
4	
3	Zapnout čerpadlo hydrauliky
2	Zapnout motor vynašeče
1	Zapnout motor chlazení

	JDI - Signalizace stavu vstupů	
	Tlačítko uvolněno	Tlačítko stisknuto
16	Pás pily je napnutý	
15		
14		
13	Relé limit proudu frek. měniče sepnuto	
12	Rameno je dole	
11	Hlavní svěrák upnut	
10	Podávací svěrák upnut	
9	Total stop aktivován	
8	Stop automatického režimu	
7	Start automatického režimu	
6	Aktivováno ruční ovládání	Materiál přítomen - podávací svěrák
5	Aktivováno automatické ovládání	Aktivován mikronizér
4	Poruchové relé frekv. měniče sepnuto	Aktivován motor chlazení
3	Ochrana čerpadla hydrauliky OK	Bezpečnostní obvod OK
2	Ochrana motoru vynašeče OK	
1	Ochrana motoru chlazení OK	

	CPU - Signalizace stavu jednotky
12	Napájení 5V
11	Napájení 5V - KOM
10	Interní CAN - TXD
9	Interní CAN - RXD
8	Externí CAN - TXD
7	Externí CAN - RXD
6	
5	
4	Zadaná pozice dosažena
3	Regulace podavače aktivní
2	Podavač dozadu
1	Podavač dopředu

16

BOMAR, s.r.o.
Těžební 1236/1
CZ 627 00, Brno

Stroj/Machine/Maschine: Ergonomic 290.250 GAC FM

Název stránky/Name page/Name seiten: Signalizace LED diod

Číslo dok./Doc.No/Anzahl der Dokumente.:	ES-2300F-203-V1.1	List/Page/Seite: 17
Napájení/Power supply/Einspeinsung:	3x230V + PE / 50Hz	Listů/Pages/Seiten: 23
Zpracoval/Processed /Hat verarbeitet:	Ing.Kostka	
Datum/Date/Datum:	22.4.2016	

	JDO - Output state signalization
16	
15	Start up speed controller
14	Activate the microniser
13	Switch on the automatic cycle indicator
12	Vice the feeding jaw
11	
10	
9	Put the arm up
8	Put the arm down
7	Unlock the arm
6	Open the main gripper
5	Open the feeding gripper
4	
3	Turn on the hydraulic pump
2	Turn on the swarf-removal motor
1	Turn on the cooling motor

	JDI - Input state signalization	
	Button released	Button pushed
16	The sawband is tight	
15		
14		
13	Speed controller current limit relay	
12	The arm is down	
11	Main gripper is closed	
10	Feeding gripper is closed	
9	Total stop activated	
8	Automatic mode stopped	
7	Automatic mode started	
6	Manual control activated	Material is present - feeding gripper
5	Automatic control activated	Microniser activated
4	Speed controller failure relay on state	Cooling motor activated
3	Hydraulic pump protection OK	Security circuit is ON
2	Swarf-rem. motor protection is OK	
1	Cooling motor protection OK	

	CPU - unit state signalization
12	Voltage 5V
11	Voltage 5V - KOM
10	Internal CAN - TXD
9	Internal CAN - RXD
8	External CAN - TXD
7	External CAN - RXD
6	
5	
4	Desired location reached
3	Feeder regulation is active
2	Feeder to the back
1	Feeder to the front

17

BOMAR, s.r.o.
Těžební 1236/1
CZ 627 00, Brno

Stroj/Machine/Maschine: Ergonomic 290.250 GAC FM

Název stránky/Name page/Name seiten: Description of the LED diodes signalization

Číslo dok./Doc.No/Anzahl der Dokumente.:	ES-2300F-203-V1.1
Napájení/Power supply/Einspeinsung:	3x230V + PE / 50Hz
Zpracoval/Processed /Hat verarbeitet:	Ing.Kostka
Datum/Date/Datum:	22.4.2016

List/Page/Seite: 18
Listů/Pages/Seiten: 23

	JDO - Ausgabe - Standanzeige
16	
15	Frequenzumrichter einschalten
14	Microniser aktivieren
13	Kontrolleuchte (aut.Betrieb) aktivieren
12	Vorschubbacke spannen
11	
10	
9	Sägerahmen nach oben
8	Sägerahmen nach unten
7	Sägerahmen nicht arretieren
6	Hauptschraubstock öffnen
5	Vorschubschraubstock öffnen
4	
3	Hydraulikpumpe einschalten
2	Spänförderer einschalten
1	Kühlmittelpumpe einschalten

	JDI - Eingabe - Standanzeige	
	Taste gelöst	Taste gedrückt
16	Sägeband gespannt	
15		
14		
13	Grenzstromrelais des Freq. eingeschalter	
12	Sägerahmen unten	
11	Hauptschraubstock gespannt	
10	Vorschubschraubstock gespannt	
9	NON-AUS Taste	
8	STOP des automatischen Zyklus	
7	START des automatischen Zyklus	
6	Manuelles bedienen aktiviert	Material anwesend - Vorschubschraub.
5	Automatisches Bedienen aktiviert	Microniser aktiviert
4	Störungsrelais des Freq. eingeschalter	Kühlmittelpumpe aktiviert
3	Schutz der Hydraulikpumpe OK	Sicherheitsschaltung verbunden
2	Schutz des Spänförderers OK	
1	Schutz der Kühlmittelpumpe OK	

	CPU - Ausgabe - Einheitsstand
12	Versorgung 5V
11	Versorgung 5V - KOM
10	Intern CAN - TXD
9	Intern CAN - RXD
8	Extern CAN - TXD
7	Extern CAN - RXD
6	
5	
4	vorschub in der gewünschen Position
3	Vorschubregulierung aktiv
2	Vorschub nach hinten
1	Vorschub nach vorne

18

BOMAR, s.r.o.
Těžební 1236/1
CZ 627 00, Brno

Stroj/Machine/Maschine: Ergonomic 290.250 GAC FM

Název stránky/Name page/Name seiten: LED Standanzeige

Číslo dok./Doc.No/Anzahl der Dokumente.:	ES-2300F-203-V1.1	List/Page/Seite:	19
Napájení/Power supply/Einspeisung:	3x230V + PE / 50Hz		
Zpracoval/Processed /Hat verarbeitet:	Ing.Kostka	Listů/Pages/Seiten:	23
Datum/Date/Datum:	22.4.2016		

6.2. Hydraulické schéma
Hydraulisches Schéma
Hydraulic diagram

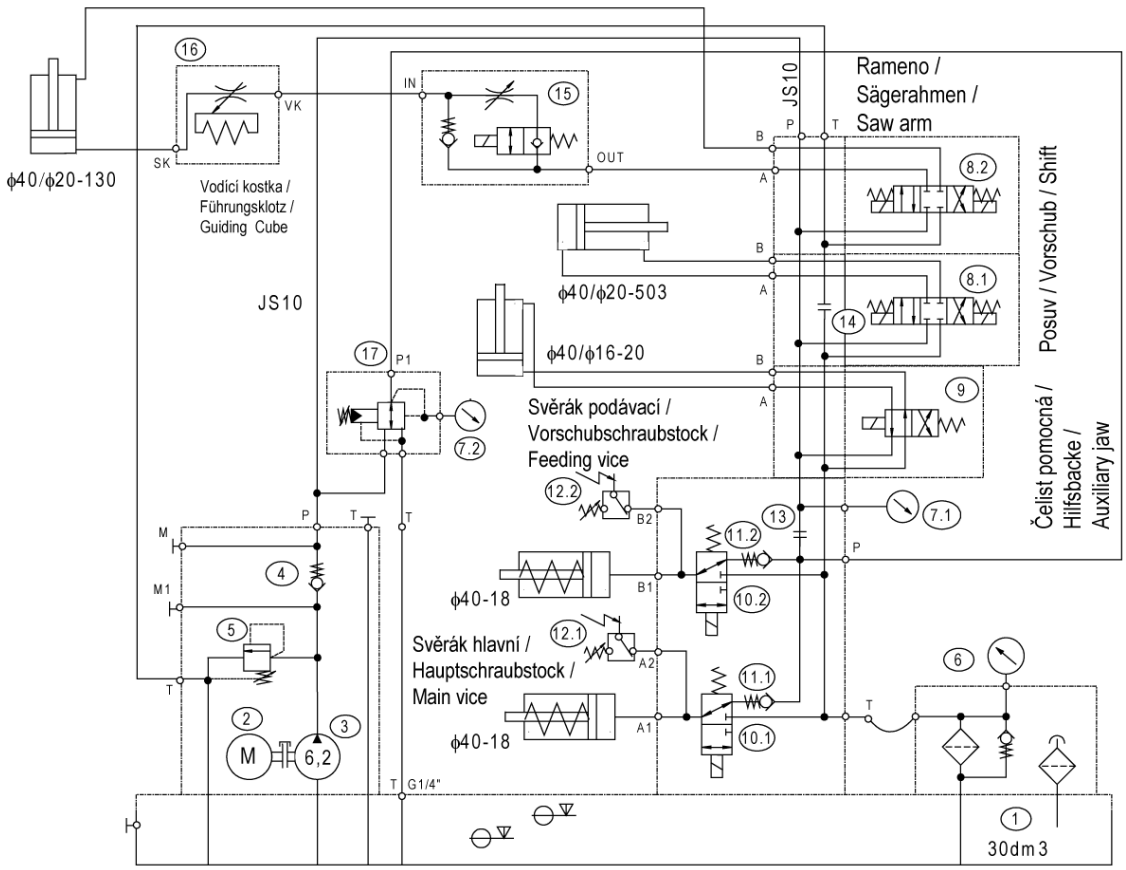

Základní technické parametry
Technische Spezifikation
Technical specification

Typ / Type / Type	Ergonomic 290.250 GAE
Hydraulický agregát / Hydroaggregat Hydro aggregat	SMA03-62/13.0-S11.X-H33M.0- -0456/02400, 92.001.028
Neuvedené světlosti / Unerwähnt Lichtbreite Unlisted inside diameters	JS6
Výstupní šroubení / Ausgangschraubung Output screewing	G1/4"
p_{max}	3 Mpa
Q	8,2 dm^3/min
n	1390 ot./min
P	0,55 kW

205.2316-200
ERGONOMIC 250 GAE

POZ.	NÁZEV	TYP	POPIS	POZNÁMKA	POČET
1	NÁDRŽ	speciál BOMAR	30 dm3	750/7260	1
2	ELEKTROMOTOR	MA-AL 80-4 0,55 kW	400/230V / 50Hz	1,51A	1
3	HYDROGENERÁTOR	P2-6,2L.66017	6,2 cm3/ot.		1
4	JEDNOSMĚRNÝ VENT.	VJ01-06/SG-1			1
5	PŘEPOUŠTĚCÍ VENTIL	VPP2-04/S-6S		SEŘÍDIT NA 3 MPa	1
6	ZPĚTNÝ FILTR	FR043-166 (10 µm)	92.153.101 /.039	+VLOŽKA V3.0510-56	1
7	MANOMETR	∅68 S GLYCERINEM		ROZSAH: 0-6 MPa	2(1)
8	ROZVADĚČ	RPE3-043Z11/02400E1K1	92.101.005		2
9	ROZVADĚČ	RPE3-042R11/02400E1K1	92.101.001		1
10	ROZVADĚČ	SD2E-A3/H2D21	92.101.022	NEBO:ROX-042D21/02400E1K1	2
11	JEDNOSMĚRNÝ VENT.	VJ01-06/SG			2
12	TLAKOVÝ SPÍNAČ	KÓD:166415031059	ROZSAH 20-50bar	SUCO S KRYTKOU	2
13	ZÁTKA			PRO REGULACI UPÍNACÍ SÍLY	1
14	ZASLEPENÍ				
15	STOP VENTIL	555-0607	92.153.013		1
16	REGULACE NA PÁSU	KOSTKA: 251.218			1
17	REDUKČNÍ VENTIL	VRN2-06/S-6R	V KOSTCE BOMAR		1(0)
18					
19					
20					

7. Výkresy sestav pro objednání náhradních dílů / Zeichnungen für Bestellung der Ersatzteile / Drawing assemblies for spare parts order

- Při objednávání náhradních dílů vždy uvádějte: typ stroje (např. practix Ergonomic 290.250 GAC) , výrobní číslo (např. 125) a rok výroby (např. 1999).

- In die Bestellung der Ersatzteile führen Sie immer an: Maschinentyp (z. B. Ergonomic 290.250 GAC), Serien Nr. (z. B. 125) und Baujahr (z. B. 1999).

- For spare parts order, you must always to allege: type of machine (for example Ergonomic 290.250 GAC), serial number (for example 125, see cover page) and year of construction (for example 1999).

7.1. ERGONOMIC 290.250 GAC

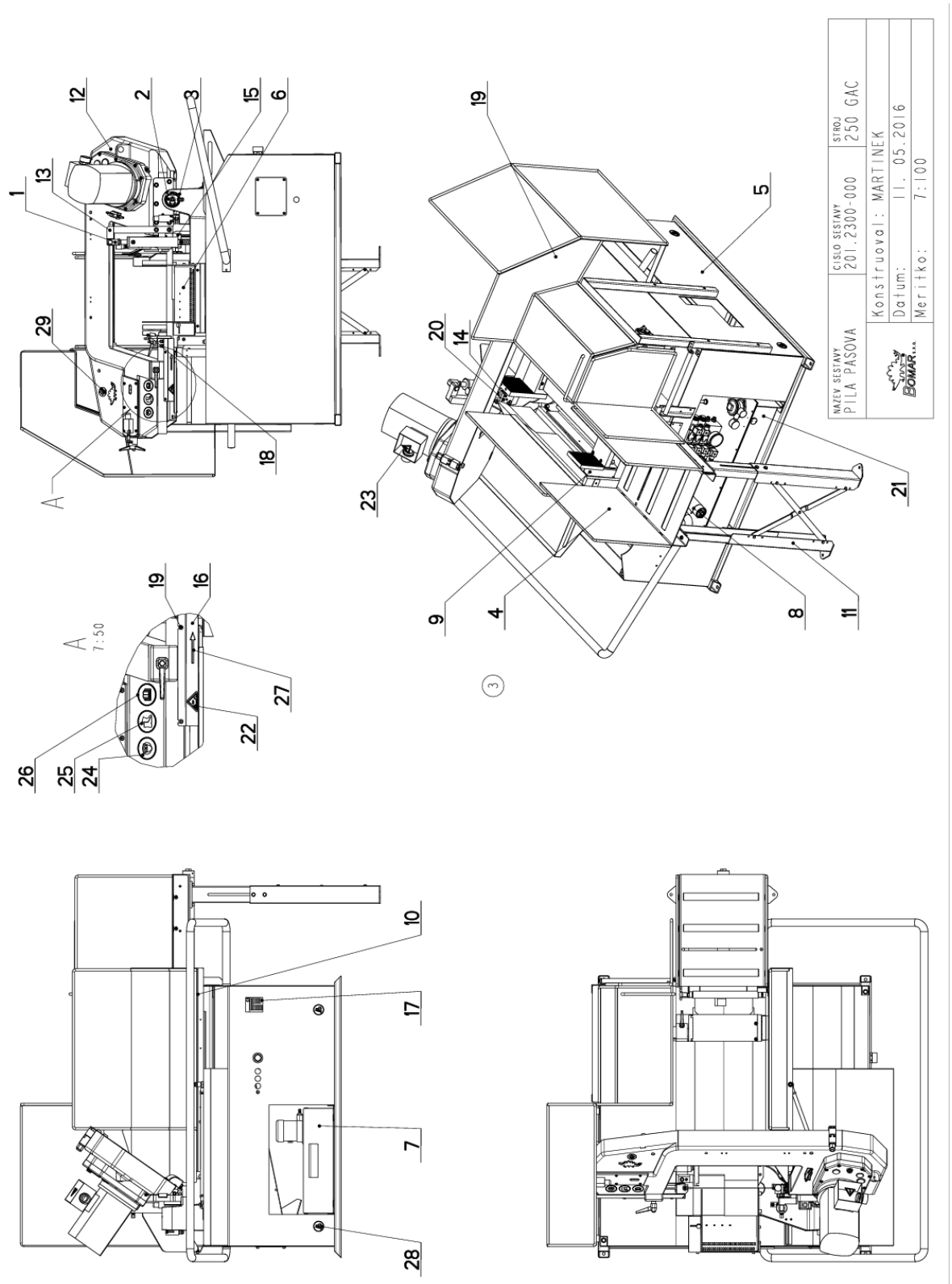

Cislo Sestavy	Ver.	Nazev sestavy
201.2300-000	3	PILA PASOVA/BAND SAW/BANDSÄGE

Poz.	Objednaci cislo	Ver.	Nazev polozky	Rozmer	Ks
1	201.0507-910	3	VALEC ZVEDACI / LIFTING CYLINDER / HEBEZYLINDER	251.231	1
2	201.0614-200	0	ODMEROVANI / MEASURING / GEHRUNGSMESSUNG		1
3	201.0702-000	2	KONZOLA OTOCNA / TURNABLE CONSOL / DREHKONSOLE		1
4	201.2114-520 (3)	0	KRYTY / COVERS / ABDECKUNGEN		1
5	201.2301-200	5	PODSTAVEC / BASE / UNTERSATZ		1
6	201.2303-200	2	SVERAK / VICE / SCHRAUBSTOCK		1
7	201.2306-200	1	CHLAZENI / COOLING / KÜHLUNG		1
8	201.2311-000	0	CELO / HEAD / STIRN		1
9	201.2311-100	1	PODAVAC / FEEDER / VORSCHUB		1
10	201.2311-210	0	KONZOLA / CONSOLE / KONSOLE		1
11	201.2312-210	1	TRAT / TRACK / BAHN		1
12	201.2804-000	8	RAMENO / SHOULDER / SÄGERAHMEN		1
13	30.0507-401	2	DRZAK / HOLDER / HALTER		1
14	30.0704-035 (1)	0	KRYT PASU / BELT COVER / BANDABDECKUNG	P1.5x56	1
15	30.0704-038 (1)	0	KRYT PASU / BELT COVER / BANDABDECKUNG	P 1.5x60	1
16	30.0704-321 (1)	0	KRYT PASU / BELT COVER / BANDABDECKUNG	P 1,5x98	1
17	30.2399-001 (2)	5	STITEK TYPOVY / MACHINE LABEL / MASCHINE SCHILD	P 0.5x65	1
18	31.0599-005 (1)	0	SAMOLEPKA / STICKER / AUFKLEBER		2
19	90.013.27.003 (1)	0	SROUB / BOLT / SCHRAUBE	M5X10	2
20	90.013.27.017 (1)	0	SROUB PULKULATY / HALF ROUND BOLT / HALBRUNDSCHRAUBE	M4x6	6
21	92.001.027	0	AGREGAT HYDRAULICKY / HYDRAULIC GENERATOR / HYDRAULIKAGGREGAT		1
22	99.900.040 (1)	0	SAMOLEPKA / STICKER / AUFKLEBER		1
23	99.900.045 (1)	0	SAMOLEPKA / STICKER / AUFKLEBER		1
24	99.900.047 (1)	0	SAMOLEPKA / STICKER / AUFKLEBER		1
25	99.900.048 (1)	0	SAMOLEPKA / STICKER / AUFKLEBER		1
26	99.900.049 (1)	0	SAMOLEPKA / STICKER / AUFKLEBER		1
27	99.900.053 (1)	0	SAMOLEPKA / STICKER / AUFKLEBER		1
28	99.900.068 (1)	0	SAMOLEPKA / STICKER / AUFKLEBER	pouziti vysokozvizneno vozikku	4
29	99.901.032 (1)	0	SAMOLEPKA / STICKER / AUFKLEBER	CETIFIKACNI SAMOLEPKA	1

1.DOPLNENY BEZPECNOSTNI SAMOLEPKY 31.0599-005, 99.900.040, 99.900.045, 99.900.047, 99.900.048,99.900.049, 99.900.053, 4x99.900.068,CERTIFIKACNI SAMOLEPKA 99.901.032,KRYT PASU 30.0704-321,30.0704-035,30.0704-038,4xSROUB M4x6(90.013.27.017), 2xSROUB M5x10(90.013.27.003) 077/ZM145 4.7.2014 SLEZACKOVA

2.PRIDAN TYPOVY STITEK 30.2399-001. 001/ZM024 8.3.2016 SLEZACKOVA

3.PRIDAN KRYTOVANI PODAVACE 201.2114-520. 060/ZM102 27.4.2016 SLEZACKOVA

Cislo Sestavy/Number of assembly/Nummer der Baugruppe; Verze (Ver.)/Version/Version; Nazev sestavy/Assembly title/Name der Baugruppe; Pozice (Poz.)/Position/Position; Objednaci cislo/Purchase order number/Bestellnummer; Nazev polozky/Volume title/Name der Position; Rozmer/Stock size/Abmessung

7.3. Válec zvedací / Lifting cylinder / Hebezylinder

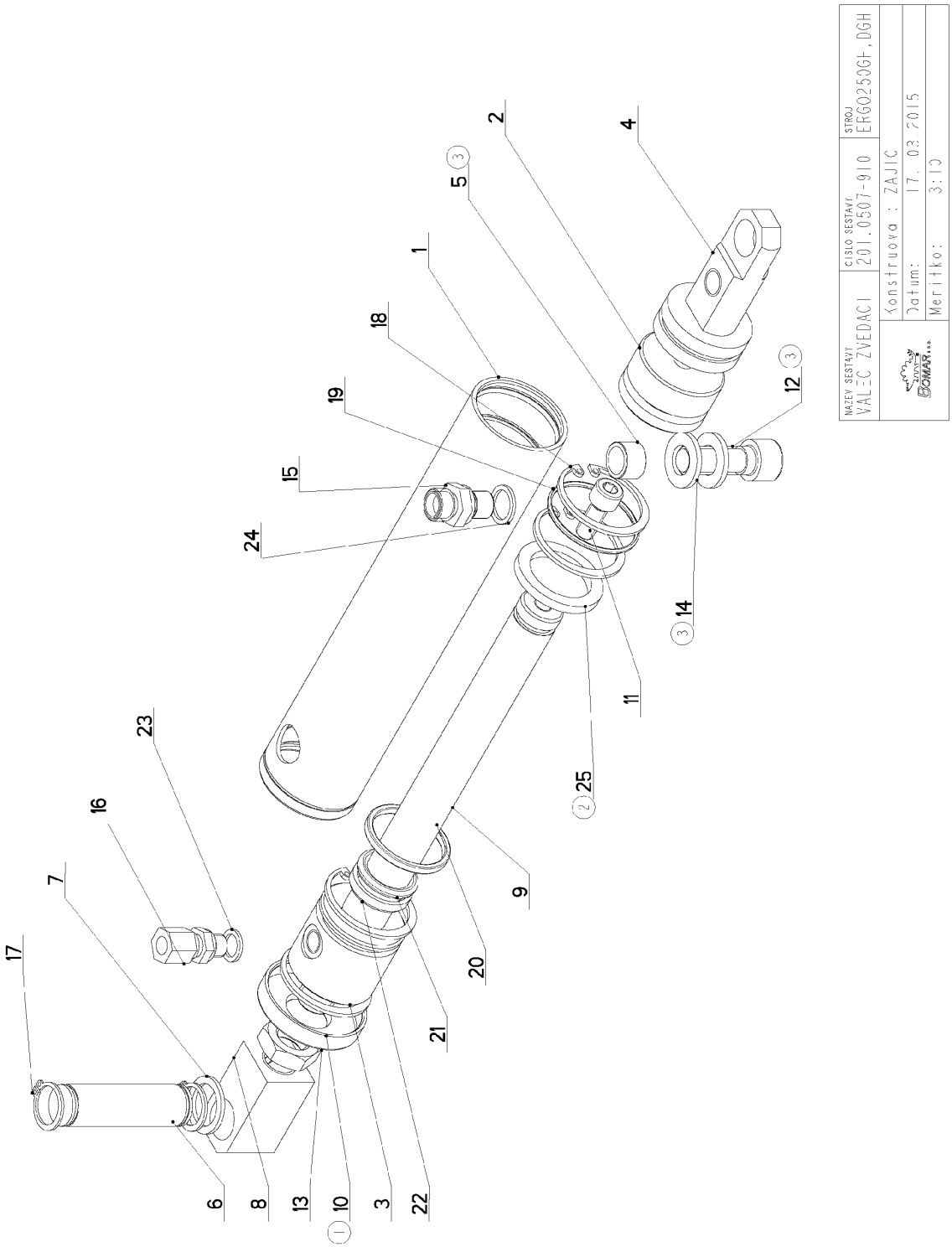

Cislo Sestavy	Ver.	Nazev sestavy
201.0507-910	3	VALEC ZVEDACI/LIFTING CYLINDER/HEBEZYLINDER

Poz.	Objednaci cislo	Ver.	Nazev polozky	Rozmer	Ks
1	30.0507-901	3	VALEC / ROLLER / ZYLINDER	TR 45/40H8	1
2	30.0507-902	0	PIST / PISTON / KOLBEN	d 45	1
3	30.0507-903	2	VIKO / COVER / DECKEL	TYC 45	1
4	30.0507-911	2	DRZAK / HOLDER / HALTER	d 40	1
5	30.0507-913 (3)	2	POUZDRO / SLEEVE / BÜCHSE	d 16	1
6	30.0514-904	0	CEP / LUG / BOLZEN	d 18	1
7	30.0514-905	0	KROUZEK DISTANCNI / DISTANCE RING / DISTANZRING	TR 25x 5	1
8	30.0807-006	2	DRZAK / HOLDER / HALTER	TYC 25x25	1
9	30.2807-003	0	PISTNICE / PISTON ROD / KOLBENSTANGE	d20	1
10	31.0507-905 (1)	0	VIKO / COVER / DECKEL		1
11	90.001.25.032	0	SROUB IMBUS / ALLEN HEAD BOLT / IMBUSSCHRAUBE	8x20	1
12	90.001.25.059 (3)	0	SROUB IMBUS / ALLEN HEAD BOLT / IMBUSSCHRAUBE	M12X35	1
13	90.101.55.003	0	MATICE / NUT / MUTTER	MATICE M16	1
14	90.150.50.007 (3)	0	PODLOZKA / WASHER / UNTERLEGSCHEIBE	PODLOZKA 13	2
15	92.002.001	0	SROUBENI PRIME / DIRECT BOLTING / GERADE VERSCHRAUBUNG	G 1/4"	1
16	92.002.102	0	SROUBENI / BOLTING / VERSCHRAUBUNG	S-GEV-8LLR	1
17	95.800.008	0	SEGR HRIDEL. / OUTSIDE SAFETY RING / SICHERUNGSRING AUSSEN	POJISTNY KROUZEK 18	2
18	95.801.005	0	SEGR DIRA / INSIDE SAFETY RING / SICHERUNGSRING INNEN	POJISTNY KROUZEK 40	4
19	96.001.010	0	O-KROUZEK STATIC / STATIC O RING / O-RING STATISCH	36X2	1
20	96.002.017	0	KROUZEK O DYNAMICKY / DYNAMIC O RING / O-RING DYNAMISCH	34x3 NBR 70SH	1
21	96.041.002	0	MANZETA TESNICI / /	20/28x4	1
22	96.060.002	0	KROUZEK STIRACI / SCRAPER RING / ABSTREIFRING	TK 20x28	1
23	96.082.001	0	KROUZEK TESNICI / SEAL RING / DICHTUNGSRING	10/14x1.5 CU	1
24	96.082.002	0	TESNENI / SEAL RING / DICHTUNGSRING	13/17x1.5 CU	1
25	96.900.015 (2)	0	TESNENI PISTU / /	PT0200400-T46N	1

1.DOPL.31.0507-905,12.1.04 STASTNY

2.ZRUSENO TESNENI 96.900.002 A NAHRAZENO 96.900.015. 336/ZM006 11.1.2011 SLEZACKOVA

3.ZRUS.POUZDRO 30.0507-913 A NAHR.30.0507-005,ZRUS.SROUB M12x35(90.001.25.059) A NAHR.M8x35(90.001.25.035). 300/ZM010 29.1.2013 SLEZACKOVA

3.ZRUS.POUZDRO 30.0507-005 A NAHR.30.0507-913,ZRUS.PODLOZKA 8,4 (90.150.50.005) A NAHR.PODLOZKOU 13(90.150.50.007), ZRUS.SROUB M8x35(90.001.25.035) A NAHR.M12x35(90.001.25.059).083/ZM085 20.3.2013 SLEZACKOVA

Cislo Sestavy/Number of assembly/Nummer der Baugruppe; Verze (Ver.)/Version/Version; Nazev sestavy/Assembly title/Name der Baugruppe; Pozice (Poz.)/Position/Position; Objednaci cislo/Purchase order number/Bestellnummer; Nazev polozky/Volume title/Name der Position; Rozmer/Stock size/Abmessung

7.5. Odměřování / Measuring / Gehrungsmessung

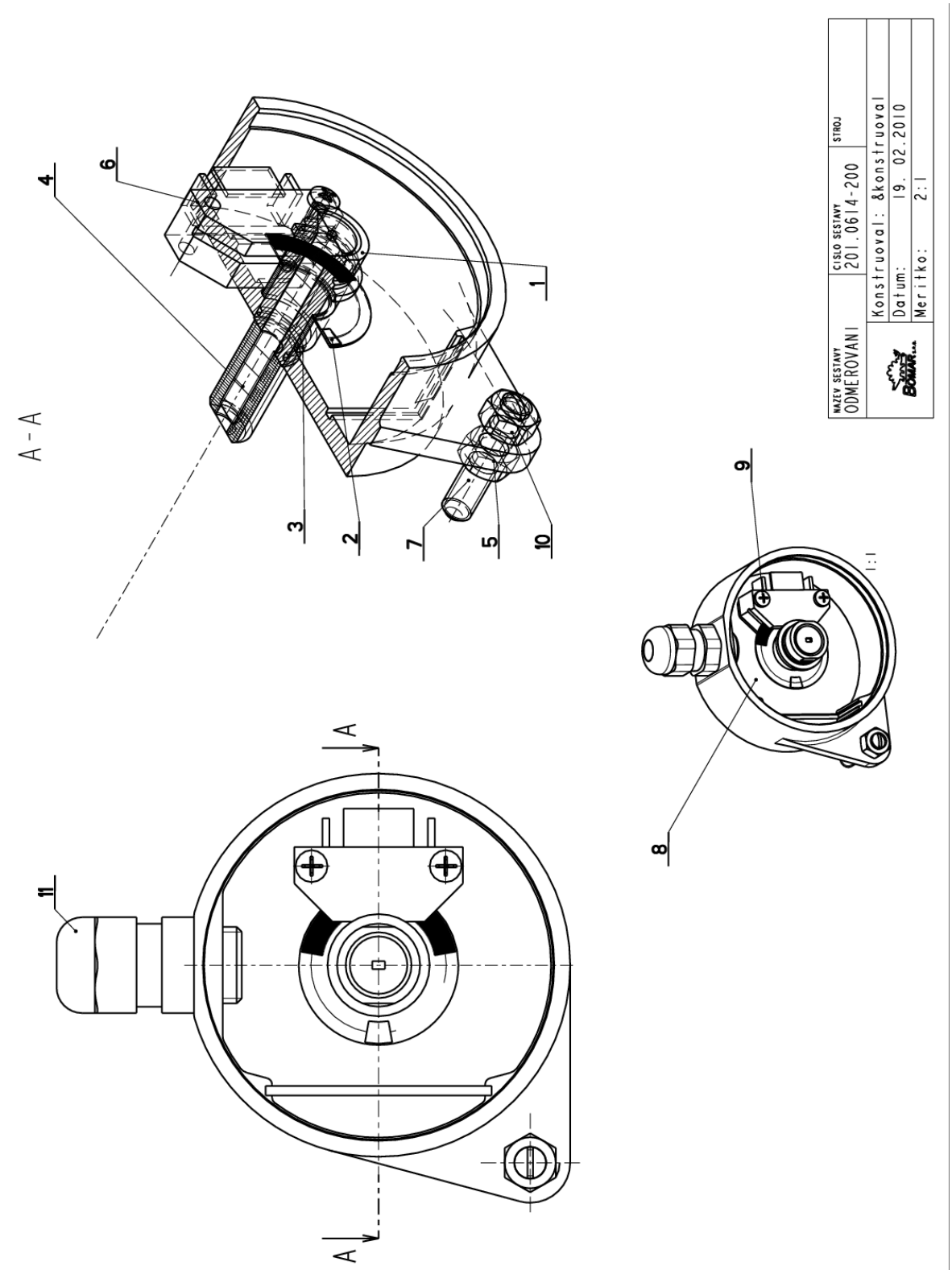

7.6. Kusovník / Piece list / Stückliste - Odměřování / Measuring / Gehrungsmessung

Cislo Sestavy	Ver.	Nazev sestavy
201.0614-200	0	ODMEROVANI/MEASURING/GEHRUNGSMESSUNG

Poz.	Objednaci cislo	Ver.	Nazev polozky	Rozmer	Ks
1	30.0614-201	0	CEP / LUG / BOLZEN	d 16	1
2	30.0614-203	0	CLONA / CURTAIN / SCHÜRZE	FOLIE 0.3	1
3	30.0614-204	0	POUZDRO / SLEEVE / BÜCHSE	TR 13x1	1
4	30.0614-208	0	SROUB / BOLT / SCHRAUBE	TYC M10	1
5	31.0614-202	0	KRABICE / BOX / DOSE	VYLISEK-PLAST	1
6	31.0631-201	0	SNIMAC / SENSOR / SENSOR		1
7	90.002.20.027	0	SROUB STAVECI / ADJUSTMENT BOLT / STELLSCHRAUBE	SROUB M5X25	1
8	90.011.27.019	0	SROUB ZAPUSTNY / COUNTERSINK BOLT / SENKSCHRAUBE	SROUB M5X40	1
9	90.014.50.004	0	SROUB / BOLT / SCHRAUBE	M2.5x14	2
10	90.100.55.003	0	MATICE / NUT / MUTTER	MATICE _ M5	2
11	91.070.010	0	PRUCHODKA / LEADTHROUGH / DURCHFÜHRUNG	M12x1.5 CERNA	1

Cislo Sestavy/Number of assembly/Nummer der Baugruppe; Verze (Ver.)/Version/Version; Nazev sestavy/Assembly title/Name der Baugruppe; Pozice (Poz.)/Position/Position; Objednaci cislo/Purchase order number/Bestellnummer; Nazev polozky/Volume title/Name der Position; Rozmer/Stock size/Abmessung

7.7. Konzola otočná / Turnable consol / Drehkonsole

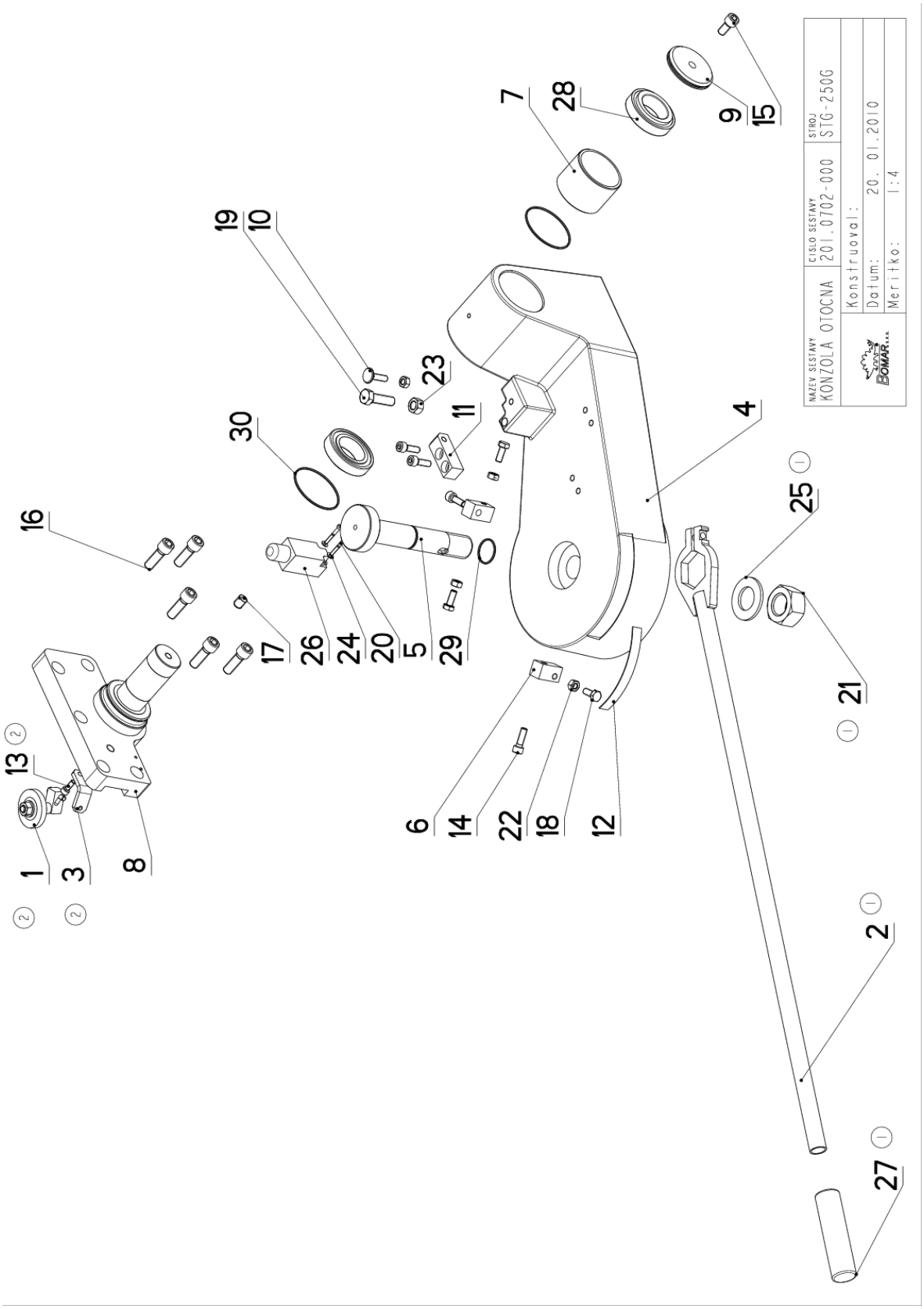

Cislo Sestavy	Ver.	Nazev sestavy
201.0702-000	2	KONZOLA OTOCNA/TURNABLE CONSOL/DREHKONSOLE

Poz.	Objednaci cislo	Ver.	Nazev polozky	Rozmer	Ks
1	201.0704-100 (2)	0	KARTAC / BRUSH / BÜRSTE		1
2	30.0502-004 (1)	1	PAKA / LEVER / HEBEL	SVARENO	1
3	30.0514-603 (2)	0	DRZAK / HOLDER / HALTER	P 5x20	1
4	30.0702-001	2	KONZOLA / CONSOLE / KONSOLE		1
5	30.0702-002	2	CEP / LUG / BOLZEN	M30x173	1
6	30.0702-006	0	DORAZ / STOP PIECE / ANSCHLAG	TYC 20x20	2
7	30.0702-008	0	POUZDRO / SLEEVE / BÜCHSE	TR 70x5	1
8	30.0702-010	1	DRZAK / HOLDER / HALTER		1
9	30.0702-012	0	VIKO / COVER / DECKEL	d 70	1
10	30.0702-013	0	SROUB / BOLT / SCHRAUBE	M8	1
11	30.0707-011	1	DRZAK / HOLDER / HALTER	TYC 20x20	1
12	31.0702-011	0	STUPNICE / SCALE / SKALA	P 0.5x15	1
13	90.001.25.017 (2)	0	SROUB IMBUS / ALLEN HEAD BOLT / IMBUSSCHRAUBE	M6X16	1
14	90.001.25.033	0	SROUB IMBUS / ALLEN HEAD BOLT / IMBUSSCHRAUBE	8x25	4
15	90.001.25.046	0	SROUB IMBUS / ALLEN HEAD BOLT / IMBUSSCHRAUBE	M10X20	1
16	90.001.25.059	0	SROUB IMBUS / ALLEN HEAD BOLT / IMBUSSCHRAUBE	M12X35	5
17	90.002.20.017	0	SROUB STAVECI / ADJUSTMENT BOLT / STELLSCHRAUBE	SROUB M12X16	1
18	90.005.55.015	0	SROUB 6HRANNY / 6 SIDED BOLT / SECHSKANTSCHRAUBE	SROUB M8X20	3
19	90.005.55.034	0	SROUB 6HRANNY / 6 SIDED BOLT / SECHSKANTSCHRAUBE	SROUB M12X40	1
20	90.012.50.007	0	SROUB / ROLLER BOLT / ZYLINDERSCHRAUBE	SROUB M4X30	2
21	90.100.25.001 (1)	0	MATICE / NUT / MUTTER	MATICE _ M30	1
22	90.100.55.005	0	MATICE / NUT / MUTTER	MATICE _ M8	4
23	90.100.55.007	0	MATICE / NUT / MUTTER	MATICE _ M12	1
24	90.150.50.002	0	PODLOZKA / WASHER / UNTERLEGSCHEIBE	PODLOZKA 4,3	2
25	90.150.50.018 (1)	0	PODLOZKA / WASHER / UNTERLEGSCHEIBE	PODLOZKA 31	1
26	91.173.007	0	SPINAC KONCOVY / END SWITCH / ENDSCHALTER	-RIWK	1
27	94.004.502 (1)	0	RUKOJET / HANDLE / GRIFF	D22	1
28	95.300.002	0	LOZISKO KUZELIK / BEARING / LAGER	32008AX	2
29	96.001.008	0	O-KROUZEK STATIC / STATIC O RING / O-RING STATISCH	26x2 NBR 70SH	1
30	96.001.018	0	O-KROUZEK STATIC / STATIC O RING / O-RING STATISCH	63X2	2

1 ZM. Z ks.STROJE ZRUSENO:30.0301-012,30.0502-002,30.0502-001,94.00.2.001, NOVE SOUCASTI:30.0502-004
94.00.502,90.100.25.001,90.150.50.018. 11.6.2008 VINOHRADSKY

2.PRIDAN KARTACEK 201.0704-100,DRZAK KARTACKU 30.0514-603 A SROUB M6x16 (90.001.25.017. 183/ZM211 29.10.2009 SLEZACKOVA

7.9. Kartáč / Brush / Bürste

Cislo Sestavy	Ver.	Nazev sestavy
201.0704-100	0	KARTAC/BRUSH/BÜRSTE

Poz.	Objednaci cislo	Ver.	Nazev polozky	Rozmer	Ks
1	30.0104-022	0	DRZAK / HOLDER / HALTER	HR 16x16	1
2	30.0704-029	0	HRIDEL / SHAFT / WELLE	d 14	1
3	31.0704-031	0	KARTAC / BRUSH / BÜRSTE		1
4	90.150.50.006	0	PODLOZKA DIN125 / WASHER / UNTERLEGSCHEIBE	PODLOZKA 10,5	1
5	90.100.55.006	0	MATICE / NUT / MUTTER	MATICE - M10	1
6	90.150.50.004	0	PODLOZKA / WASHER / UNTERLEGSCHEIBE	PODLOZKA 6,4	1
7	95.800.001	0	KROUZEK POJIST.VNEJS / OUTSIDE SAFETY RING / SICHERUNGSRING AUßEN	POJISTNY KROUZEK 6	1
8	90.001.25.019	0	SROUB IMBUS CERNENY / ALLEN HEAD BOLT / IMBUSSCHRAUBE	M6X25	1

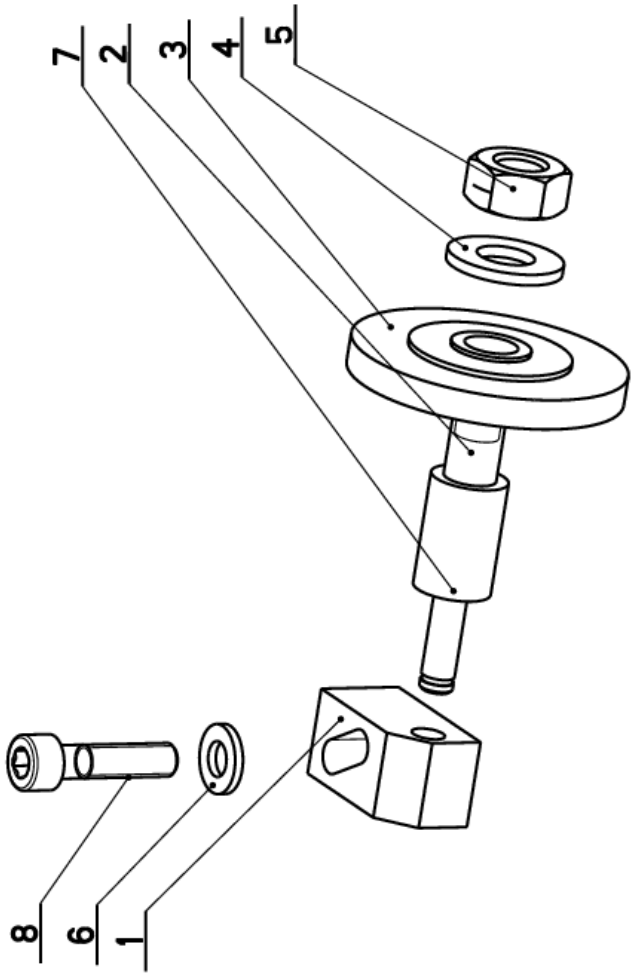

7.10. Kryt podavače / Vorschubsleistedeckel / Feeders bracket cover

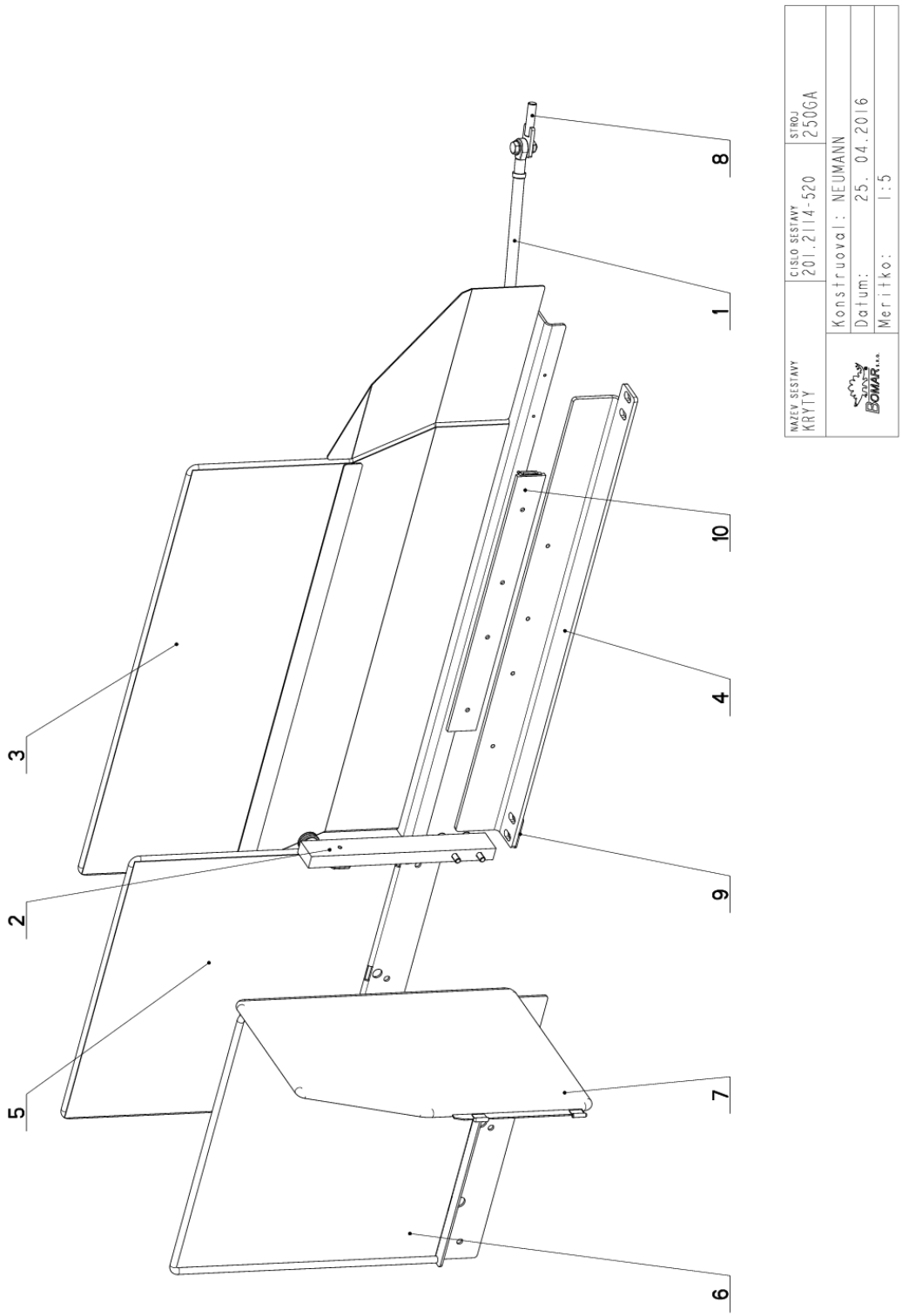

7.11. Kusovník / Piece list / Stückliste - Kryt podavače / Vorschubsleistedeckel / Feeders bracket cover

Cislo Sestavy	Ver.	Nazev sestavy
201.2114-520	0	KRYTY/COVERS/ABDECKUNGEN

Poz.	Objednaci cislo	Ver.	Nazev polozky	Rozmer	Ks
1	201.2114-525	0	PAKA / LEVER / HEBEL		1
2	201.2114-530	0	PODPERA / SUPPORT / STUTZE		1
3	30.2114-521	0	KRYT / COVER / ABDECKUNG		1
4	30.2114-522	0	PLECH / PLATE / BLECH	P 6x118	1
5	30.2114-527	0	KRYT / COVER / ABDECKUNG		1
6	30.2114-528	0	KRYT / COVER / ABDECKUNG		1
7	30.2114-529	0	DVERE / DOOR / TÜR		1
8	30.2114-533	0	DRZAK / HOLDER / HALTER		1
9	30.2114-535	0	PLECH / PLATE / BLECH	P 2x45	1
10	99.205.001	0	PROFIL / PROFILE / PROFIL		1

Cislo Sestavy/Number of assembly/Nummer der Baugruppe; Verze (Ver.)/Version/Version; Nazev sestavy/Assembly title/Name der Baugruppe; Pozice (Poz.)/Position/Position; Objednaci cislo/Purchase order number/Bestellnummer; Nazev polozky/Volume title/Name der Position; Rozmer/Stock size/Abmessung

7.12. Podstsvec / Base / Untersatz

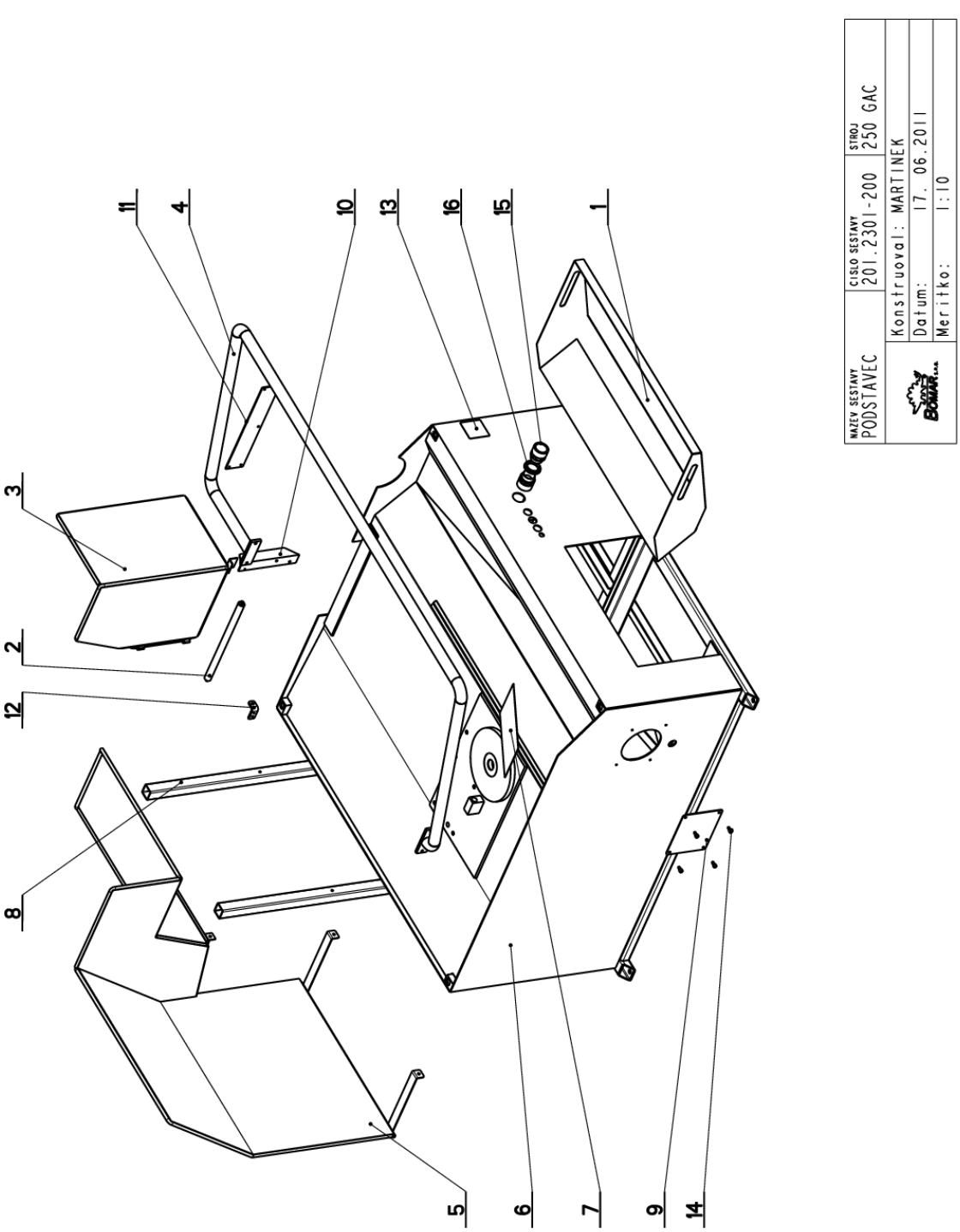

Cislo Sestavy	Ver.	Nazev sestavy
201.2301-200	4	PODSTAVEC/BASE/UNTERSATZ

Poz.	Objednaci cislo	Ver.	Nazev polozky	Rozmer	Ks
1	30.0501-002	1	SKLUZ / SLIDE / RUTSCH		1
2	30.2114-402	1	VALECEK / CYLINDER / ROLLE	d 20	1
3	30.2114-501	0	DVERE / DOOR / TÜR		1
4	30.2114-503	0	RAM / FRAME / RAHMEN		1
5	30.2114-511	0	KRYT / COVER / ABDECKUNG		1
6	30.2301-201	3	PODSTAVEC / BASE / UNTERSATZ		1
7	30.2301-202	0	SITO / SIEVE / GITTERWERK	PI-127	1
8	30.2301-204	1	PROFIL / PROFILE / PROFIL	JACKL 35x35x3	2
9	30.2301-205	0	VIKO / COVER / DECKEL	P 2-170x138	1
10	30.2301-206	1	UHELNIK / ANGLE / WINKEL	PROFIL 35x35x3	1
11	30.2301-207	0	PLECH / PLATE / BLECH	P 3 - 60	1
12	30.2314-012	1	DRZAK / HOLDER / HALTER	TYC 20x5	1
13	31.2399-001	1	STITEK TYPOVY / MACHINE LABEL / MASCHINE SCHILD	P 0.5 - 65	1
14	90.001.25.016	0	SROUB IMBUS / ALLEN HEAD BOLT / IMBUSSCHRAUBE	M6X12	4
15	91.071.004	0	VYVODKA / BUSHING / TÜLLE	VYVODKA	2
16	91.072.007	0	MATICE / NUT / MUTTER	MATICE	2

7.14. Svěrák / Vice / Schraubstock

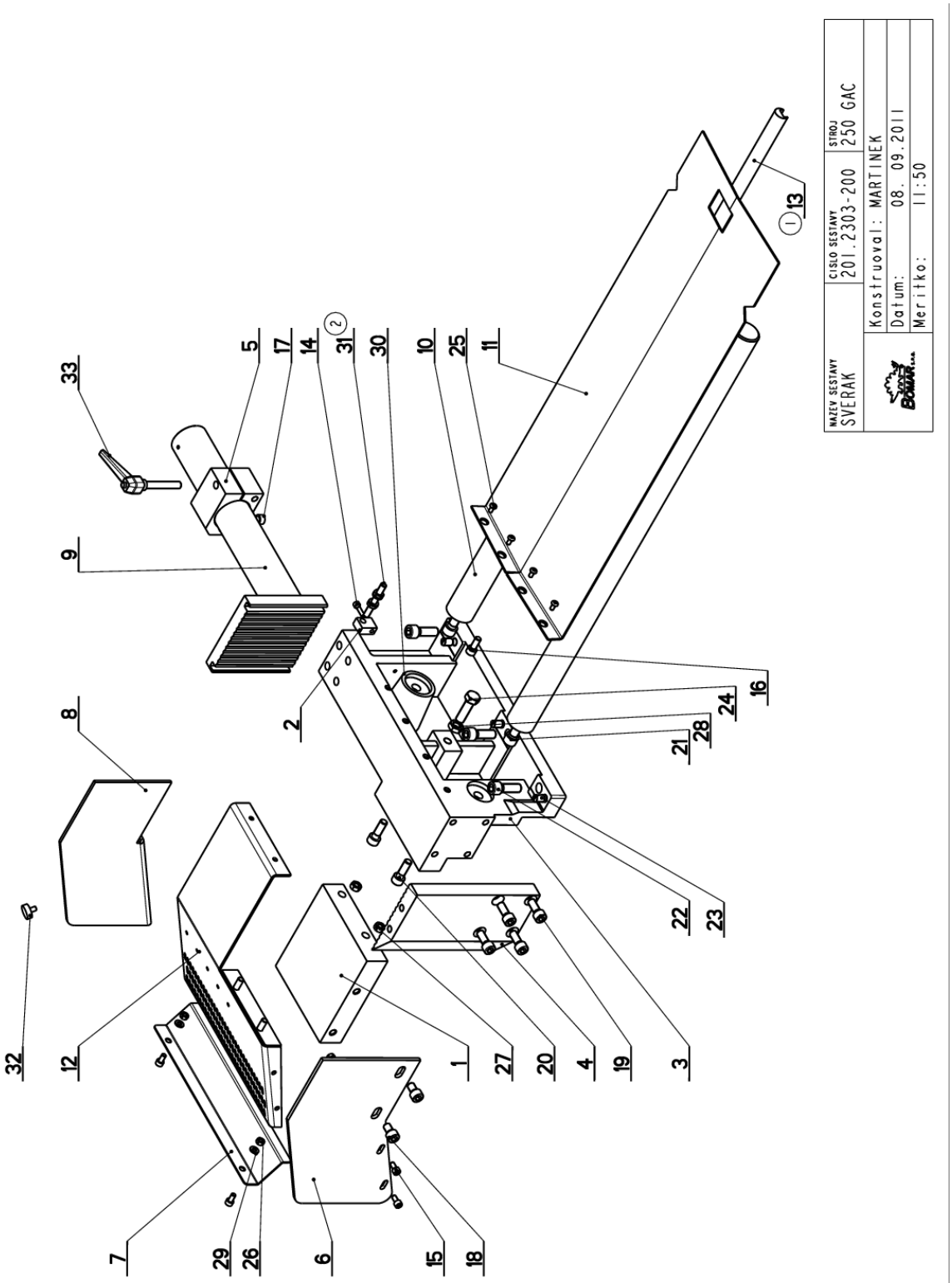

Cislo Sestavy	Ver.	Nazev sestavy
201.2303-200	2	SVERAK/VICE/SCHRAUBSTOCK

Poz.	Objednaci cislo	Ver.	Nazev polozky	Rozmer	Ks
1	30.2111-006	1	PODLOZKA / WASHER / UNTERLEGSCHEIBE	ODLITEK	1
2	30.2114-001	0	DRZAK / HOLDER / HALTER		1
3	30.2303-001	1	PODSTAVEC SVERAKU / VICE BASE / SCHRAUBSTOCKUNTERSATZ		1
4	30.2303-002	0	CELIST / JAW / BACKE	HR 130x25	1
5	30.2303-003	2	DRZAK / HOLDER / HALTER	TYC 80x50	1
6	30.2303-202	2	CELIST / JAW / BACKE	P5-279	1
7	30.2303-204	1	SKLUZ / SLIDE / RUTSCH	P 1.5x83	1
8	30.2303-205	2	CELIST / JAW / BACKE	P4-279	1
9	30.2307-220	0	VALEC UPINACI / FIXING CYLINDER / SPANNZYLINDER		1
10	30.2311-205	0	TYC VODICI / LEAD POLE / FÜHRUNGSSTANGE	40h6-766	2
11	30.2311-206	3	PLECH / PLATE / BLECH	P 2-258x755	1
12	30.2311-207	2	ROST / GRILL / GITTER		1
13	30.2803-022 (1)	1	TYC / POLE / STANGE	d 20	1
14	90.001.25.010	0	SROUB IMBUS / ALLEN HEAD BOLT / IMBUSSCHRAUBE	M5X20	1
15	90.001.25.016	0	SROUB IMBUS / ALLEN HEAD BOLT / IMBUSSCHRAUBE	M6X12	4
16	90.001.25.032	0	SROUB IMBUS CERNENY / ALLEN HEAD BOLT / IMBUSSCHRAUBE	8x20	1
17	90.001.25.036	0	SROUB IMBUS / ALLEN HEAD BOLT / IMBUSSCHRAUBE	M8X40	1
18	90.001.25.045	0	SROUB IMBUS / ALLEN HEAD BOLT / IMBUSSCHRAUBE	M10X16	2
19	90.001.25.047	0	SROUB IMBUS / ALLEN HEAD BOLT / IMBUSSCHRAUBE	M10X25	4
20	90.001.25.048	0	SROUB IMBUS / ALLEN HEAD BOLT / IMBUSSCHRAUBE	M10X30	2
21	90.001.25.057	0	SROUB IMBUS CERNENY / ALLEN HEAD BOLT / IMBUSSCHRAUBE	M12x25	1
22	90.001.25.059	0	SROUB IMBUS / ALLEN HEAD BOLT / IMBUSSCHRAUBE	M12X35	6
23	90.002.20.014	0	SROUB STAVECI / ADJUSTMENT BOLT / STELLSCHRAUBE	SROUB M10X16	5
24	90.005.55.034	0	SROUB 6HRANNY / 6 SIDED BOLT / SECHSKANTSCHRAUBE	SROUB M12X40	1
25	90.013.27.003	0	SROUB / BOLT / SCHRAUBE	M5X10	4
26	90.100.55.004	0	MATICE / NUT / MUTTER	MATICE _ M6	4
27	90.100.55.005	0	MATICE / NUT / MUTTER	MATICE _ M8	2
28	90.101.55.006	0	MATICE / NUT / MUTTER	MATICE M12	1
29	90.150.50.004	0	PODLOZKA / WASHER / UNTERLEGSCHEIBE	PODLOZKA 6,4	2
30	91.070.001	0	VYVODKA / BUSHING / TÜLLE	PG7	1
31	91.172.009 (2)	0	SPINAC INDUKTIVNI / /	JPS30D081.5PNOFC	1
32	94.007.002	0	SROUB / BOLT / SCHRAUBE		1
33	94.008.006	0	PAKA UPINACI / ATTACHMENT LEVER / SPANNHEBEL	M10	1

1.VYMENA ODMEROVACI TYCE - ZRUSENA SOUC.30.2311-204 A NAHR. 30.2803-022. 571/ZM323 8.11.2006 SLEZACKOVA
2.ZRUS.SPINAC 91.172.001 A NAHR.91.172.009. 203/ZM245 8.9.2011 SLEZACKOVA

7.16. Chlazení / Cooling / Kühlung

Cislo Sestavy
201.2306-200

Ver.
1

Nazev sestavy
CHLAZENI/COOLING/KÜHLUNG

Poz.	Objednaci cislo	Ver.	Nazev polozky	Rozmer	Ks
1	30.1806-001	4	NADRZ / CONTAINER / BEHÄLTER		1
2	30.2306-201	0	VIKO / COVER / DECKEL	P 1.5x330	1
3	91.020.032 (1)	0	CERPADLO CHLAZENI / COOLING PUMP / KÜHLMITTELPUMPE	230/400V	1
4	94.202.021 (1)	0	REDUKCE / REDUCTION / ADAPTOR / REDUKTION	1/2"-10	1

1.ZRUS.CERPADLO 91.020.004 A NAHR.91.020.032,ZRUS.REDUKCE 94.202.005 A NAHR.94.202.021. 024/ZM071 14.3.2016 SLEZACKOVA

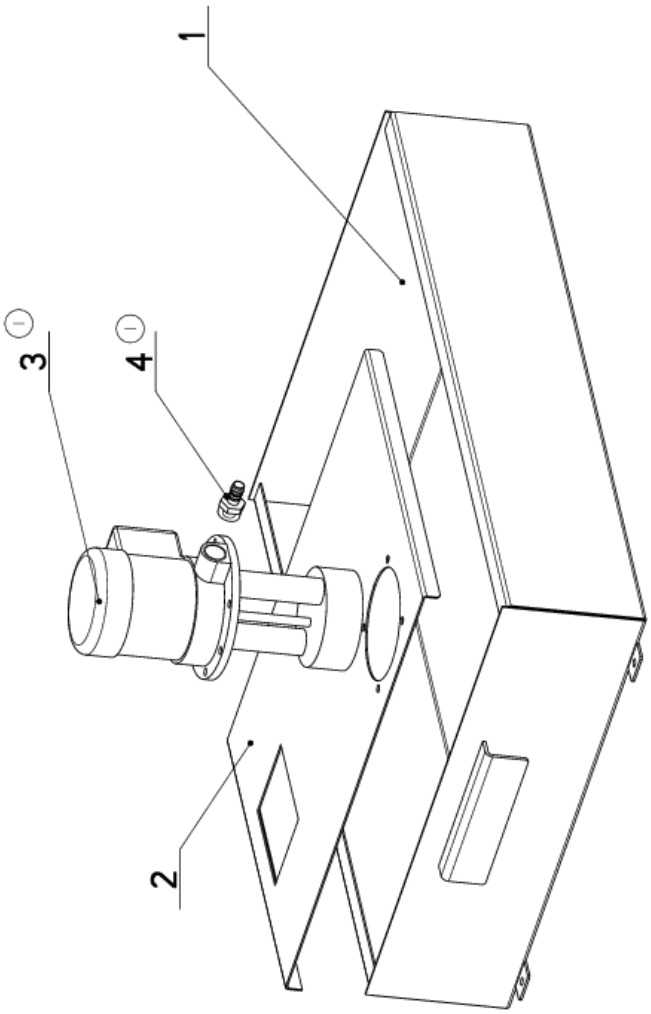

Cislo Sestavy/Number of assembly/Nummer der Baugruppe; Verze (Ver.)/Version/Version; Nazev sestavy/Assembly title/Name der Baugruppe; Pozice (Poz.)/Position/Position;
Objednaci cislo/Purchase order number/Bestellnummer; Nazev polozky/Volume title/Name der Position; Rozmer/Stock size/Abmessung

7.17. Čelo / Head / Stirn

Cislo Sestavy
201.2311-000

Ver.
0

Nazev sestavy
CELO/HEAD/STIRN

Poz.	Objednaci cislo	Ver.	Nazev polozky	Rozmer	Ks
1	201.2107-000	0	PODAVAC / FEEDER / VORSCHUB		1
2	30.2311-001	0	CELO / HEAD / STIRN		1
3	30.2811-209	1	PRILOZKA / STRAP / LASCHE	P 25x145	1
4	90.001.25.058	0	SROUB IMBUS / ALLEN HEAD BOLT / IMBUSSCHRAUBE	HR 70x15	1
5	90.001.25.063	0	SROUB IMBUS / ALLEN HEAD BOLT / IMBUSSCHRAUBE	M12X30	2
6	90.001.25.083	0	SROUB IMBUS / ALLEN HEAD BOLT / IMBUSSCHRAUBE	M12X60	2
7	92.004.001	0	SROUBENI UHLOVE / ANGLE BOLTING / WINKELVERSCHRAUBUNG	M8X30	4
8	95.800.019	0	SEGR HRIDEL. / OUTSIDE SAFETY RING / SICHERUNGSRING AUSSEN	37701	1
				POJISTNY KROUZEK 52	2

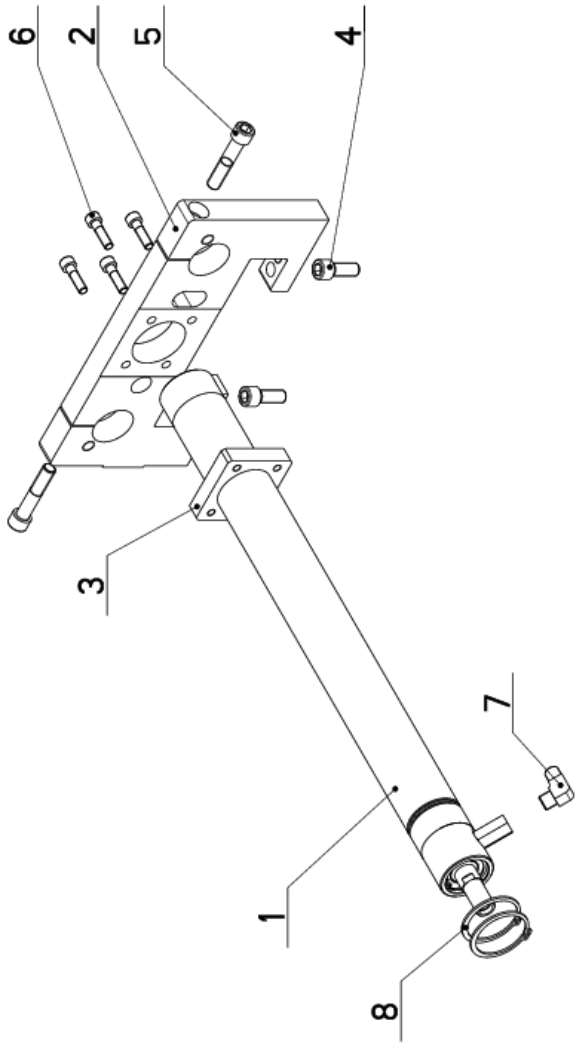

Cislo Sestavy/Number of assembly/Nummer der Baugruppe; Verze (Ver.)/Version/Version; Nazev sestavy/Assembly title/Name der Baugruppe; Pozice (Poz.)/Position/Position;
Objednaci cislo/Purchase order number/Bestellnummer; Nazev polozky/Volume title/Name der Position; Rozmer/Stock size/Abmessung

7.18. Podavač / Feeder / Vorschub

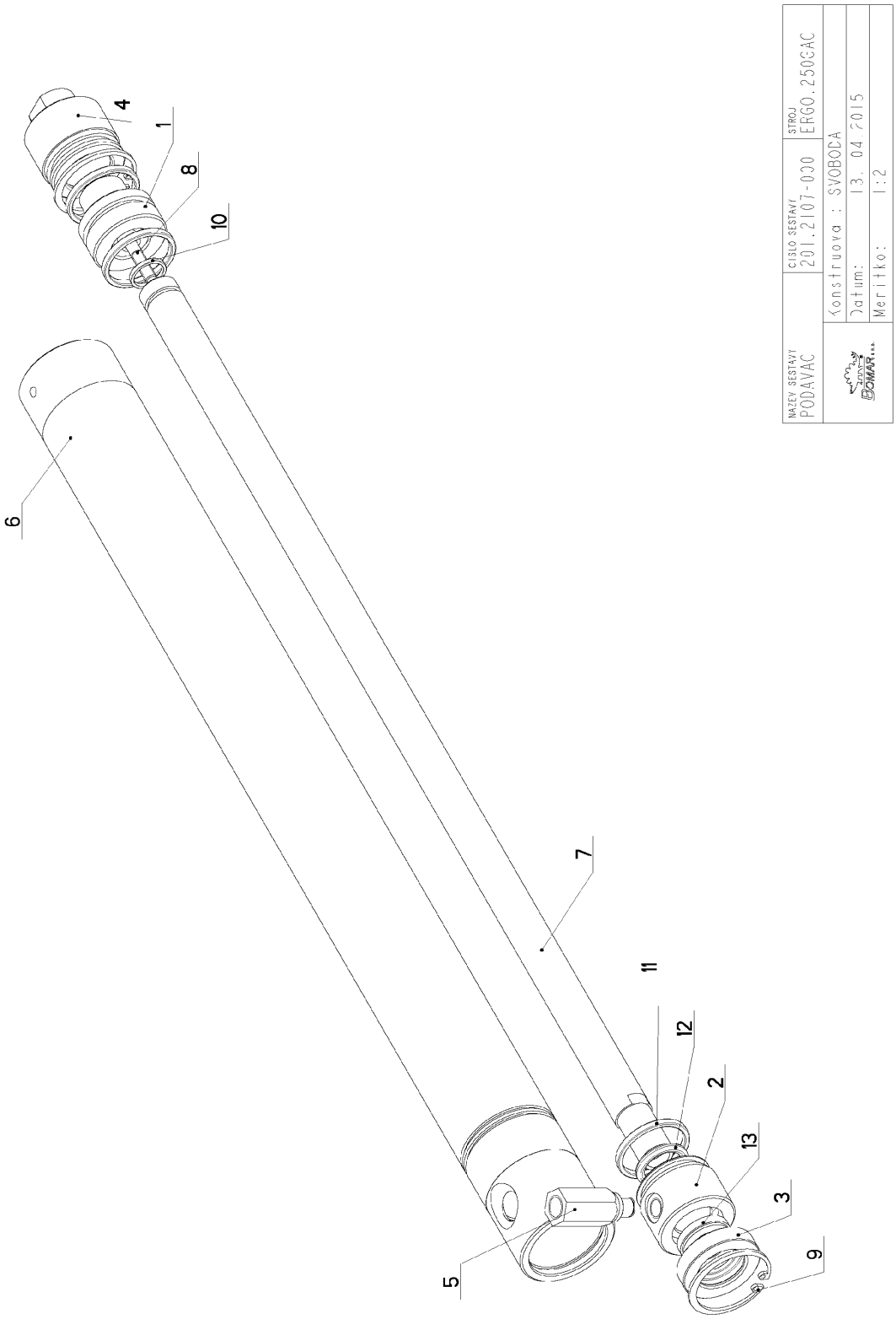

7.19. Kusovník / Piece list / Stückliste - Podavač / Feeder / Vorschub

Cislo Sestavy	Ver.	Nazev sestavy
201.2107-000	0	PODAVAC/FEEDER/VORSCHUB

Poz.	Objednaci cislo	Ver.	Nazev polozky	Rozmer	Ks
1	30.2107-001	0	PIST / PISTON / KOLBEN	d 45	1
2	30.2107-002	0	PRIRUBA / FLANGE / FLANSCHE	TYC 45	1
3	30.2107-003	0	VIKO / COVER / DECKEL	d 45	1
4	30.2107-004	0	VIKO / COVER / DECKEL	d45	1
5	30.2111-011	1	REDUKCE / REDUCTION / ADAPTOR / REDUKTION	TYC 17	1
6	30.2112-201	0	VALEC / ROLLER / ZYLINDER	TR 52/40H8	1
7	30.2112-202	0	PISTNICE / PISTON ROD / KOLBENSTANGE	d 20	1
8	90.001.25.019	0	SROUB IMBUS / ALLEN HEAD BOLT / IMBUSSCHRAUBE	M6X25	1
9	95.801.006	0	SEGR DIRA / INSIDE SAFETY RING / SICHERUNGSRING INNEN	POJISTNY KROUZEK 42	2
10	96.002.007	0	KROUZEK O DYNAMICKY / DYNAMIC O RING / O-RING DYNAMISCH	16x2 NBR 70SH	1
11	96.002.017	0	KROUZEK O DYNAMICKY / DYNAMIC O RING / O-RING DYNAMISCH	34x3 NBR 70SH	3
12	96.041.002	0	TESNENI / SEALING / DICHTUNG	20/28x4	1
13	96.060.002	0	KROUZEK STIRACI / SCRAPER RING / ABSTREIFRING	KROUZEK STIRACI 20	1

Cislo Sestavy/Number of assembly/Nummer der Baugruppe; Verze (Ver.)/Version/Version; Nazev sestavy/Assembly title/Name der Baugruppe; Pozice (Poz.)/Position/Position; Objednaci cislo/Purchase order number/Bestellnummer; Nazev polozky/Volume title/Name der Position; Rozmer/Stock size/Abmessung

7.20. Podavač / Feeder / Vorschub

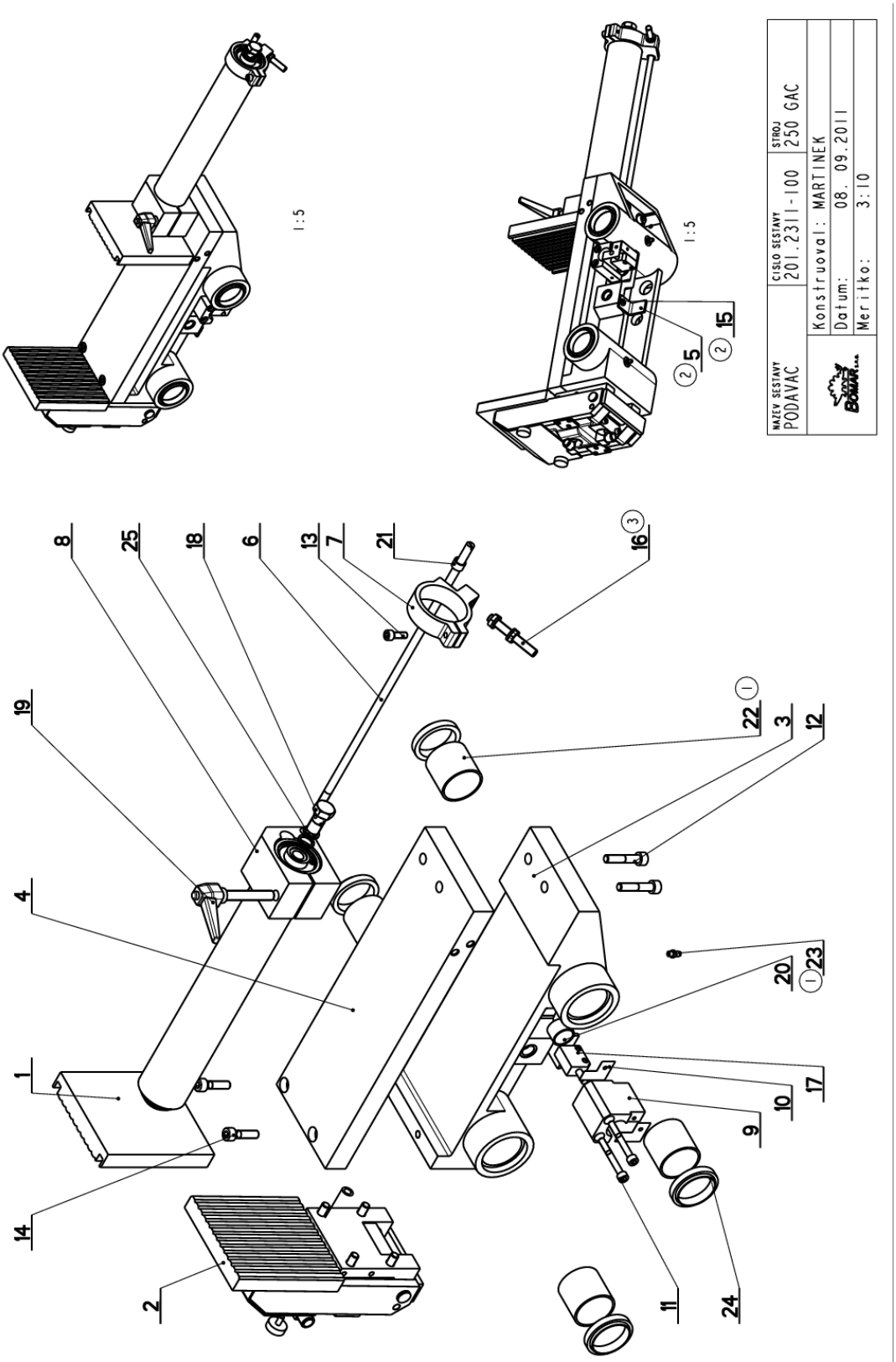

Cislo Sestavy	Ver.	Nazev sestavy
201.2311-100	3	PODAVAC/FEEDER/VORSCHUB

Poz.	Objednaci cislo	Ver.	Nazev polozky	Rozmer	Ks
1	201.2307-200	0	VALEC UPINACI / FIXING CYLINDER / SPANNZYLINDER		1
2	201.2311-400	1	CELIST / JAW / BACKE		1
3	30.2311-102	2	VOZIK / CART / WAGEN	ODLITEK	1
4	30.2311-103	2	DESKA / BOARD / PLATTE	TYC 120x25	1
5	30.2311-104 (2)	0	DORAZ / STOP PIECE / ANSCHLAG	L 30x 30x3	1
6	30.2311-105	1	TYC / POLE / STANGE	TYC 8	1
7	30.2311-111	1	DRZAK / HOLDER / HALTER	P20-79.9	1
8	30.2311-112	4	DRZAK / HOLDER / HALTER	HR 80x50	1
9	30.2911-029	0	DRZAK / HOLDER / HALTER	HR 50x50	1
10	30.2911-030	0	STERAC / WIPER / ABSTREIFER	P 0.2-26.5	2
11	90.001.25.023	0	SROUB IMBUS / ALLEN HEAD BOLT / IMBUSSCHRAUBE	M6X50	2
12	90.001.25.036	0	SROUB IMBUS / ALLEN HEAD BOLT / IMBUSSCHRAUBE	M8X40	2
13	90.001.25.076	0	SROUB IMBUS CERNENY / ALLEN HEAD BOLT / IMBUSSCHRAUBE	M6X18	1
14	90.001.55.083	0	SROUB IMBUS / ALLEN HEAD BOLT / IMBUSSCHRAUBE	M8X30	2
15	90.013.27.005 (2)	0	SROUB PULKULATY / HALF ROUND BOLT / HALBRUNDSCHRAUBE	M5X16	1
16	91.172.009 (3)	0	SPINAC INDUKTIVNI / /	JPS30D081.5PNOFC	1
17	91.270.006	0	SNIMAC MAGNET. / MAGNETIC SENSOR / MAGNETSENSOR		1
18	93.010.002	0	SROUB / BOLT / SCHRAUBE	G1/4"	1
19	94.008.006	0	PAKA UPINACI / ATTACHMENT LEVER / SPANNHEBEL	M10	1
20	95.700.003	0	POUZDRO / SLEEVE / BÜCHSE	20X15	1
21	95.700.011	0	POUZDRO / SLEEVE / BÜCHSE	10X8	1
22	95.700.025 (1)	0	POUZDRO / SLEEVE / BÜCHSE	40X40	4
23	95.860.001 (1)	0	HLAVICE MAZACI / HEAD / KOPF	KM5	2
24	96.040.001	0	KROUZEK STIRACI / SCRAPER RING / ABSTREIFRING	40x50	4
25	96.082.002	0	TESNENI / SEALING / DICHTUNG	KROUZEK CU 13/17	2

1 Doplnena souc. 95.860.001, pouzdro KU40x40 95.700.006 nahrazeno 95.700.025 24.3.05 Stastna

2.PRIDANA NOVA SOUCAST 30.2311-104, SROUB PULKULATY M5x16. 22.4.2005 SLEZACKOVA

3.ZRUS.SPINAC 91.172.001 A NAHR.91.172.009. 203/ZM245 8.9.2011 SLEZACKOVA

7.22. Válec upínací / Fixing cylinder / Spannzylinder

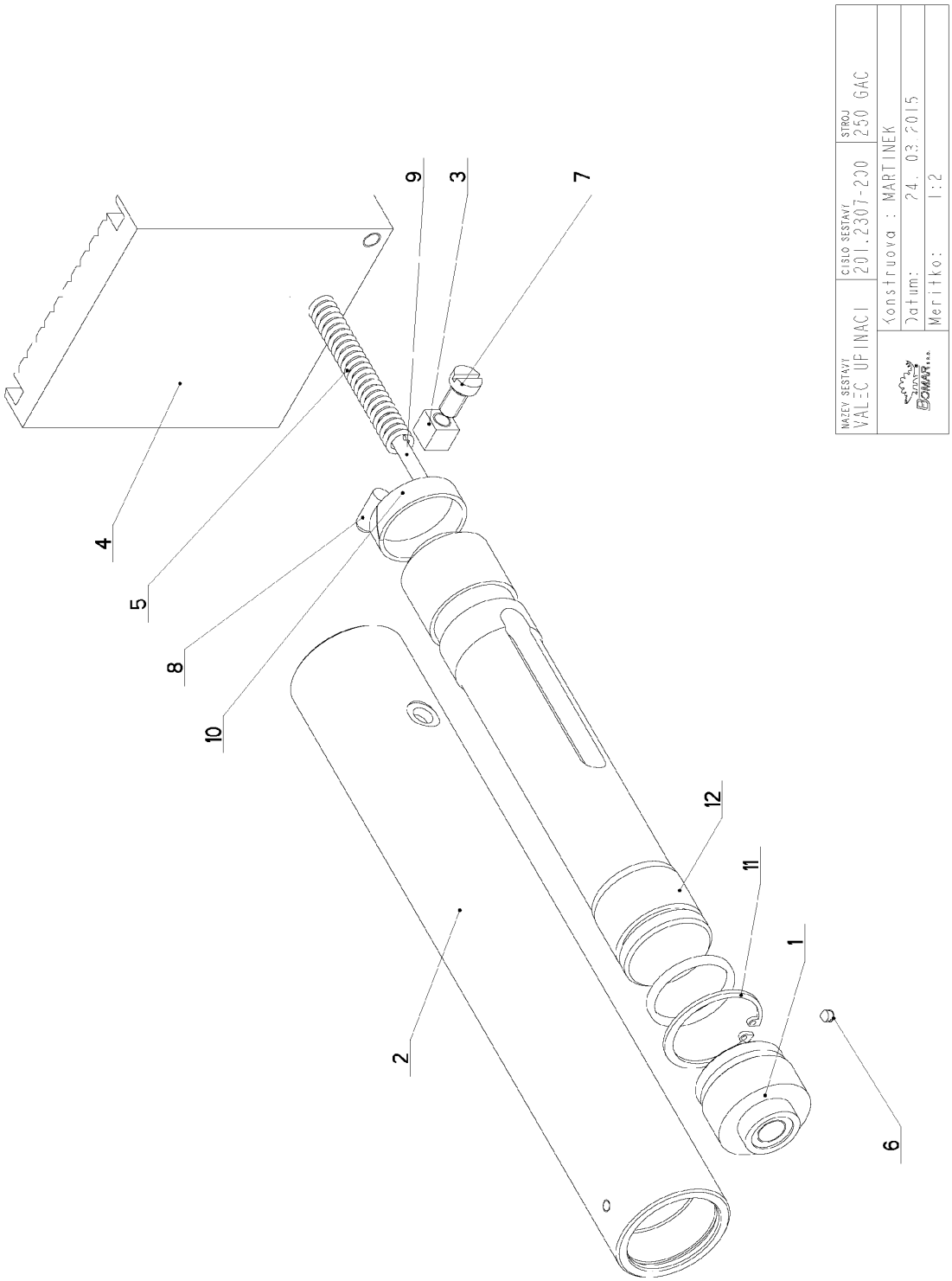

7.23. Kusovník / Piece list / Stückliste - Válec upínací / Fixing cylinder / Spannzylinder

Cislo Sestavy	Ver.	Nazev sestavy
201.2307-200	0	VALEC UPINACI/FIXING CYLINDER/SPANNZYLINDER

Poz.	Objednaci cislo	Ver.	Nazev polozky	Rozmer	Ks
1	30.2107-203	0	VIKO / COVER / DECKEL	d 45	1
2	30.2107-204	0	VALEC / ROLLER / ZYLINDER	TR 52/42	1
3	30.2107-205	0	DORAZ / STOP PIECE / ANSCHLAG	HR12	1
4	30.2307-201	0	CELIST / JAW / BACKE		1
5	31.2107-206	0	PRUZINA / SPRING / FEDER	2x12x84x25,5	1
6	90.003.2D.001	0	SROUB STAVECI / ADJUSTMENT BOLT / STELLSCHRAUBE	SROUB M5X6	1
7	90.012.50.012	0	SR. S VALC. HLAV. / ROLLER BOLT / ZYLINDERSCHRAUBE	SROUB M8X16	1
8	90.301.0Z.008	0	KOLIK VALCOVY / CYLINDRICAL PIN SOFT / ZYLINDERSTIFT WEICH	KOLIK 8X20	1
9	90.301.0Z.017	0	KOLIK VALCOVY / CYLINDRICAL PIN SOFT / ZYLINDERSTIFT WEICH	KOLIK 6X45	1
10	95.780.001	0	KROUZEK VODICI / LEAD RING / FÜHRUNGSRING	GR 4300160	1
11	95.801.006	0	SEGR DIRA / INSIDE SAFETY RING / SICHERUNGSRING INNEN	POJISTNY KROUZEK 42	1
12	96.002.017	0	KROUZEK O DYNAMICKY / DYNAMIC O RING / O-RING DYNAMISCH	34x3 NBR 70SH	2

Cislo Sestavy/Number of assembly/Nummer der Baugruppe; Verze (Ver.)/Version/Version; Nazev sestavy/Assembly title/Name der Baugruppe; Pozice (Poz.)/Position/Position; Objednaci cislo/Purchase order number/Bestellnummer; Nazev polozky/Volume title/Name der Position; Rozmer/Stock size/Abmessung

7.24. Čelist / Jaw / Backe

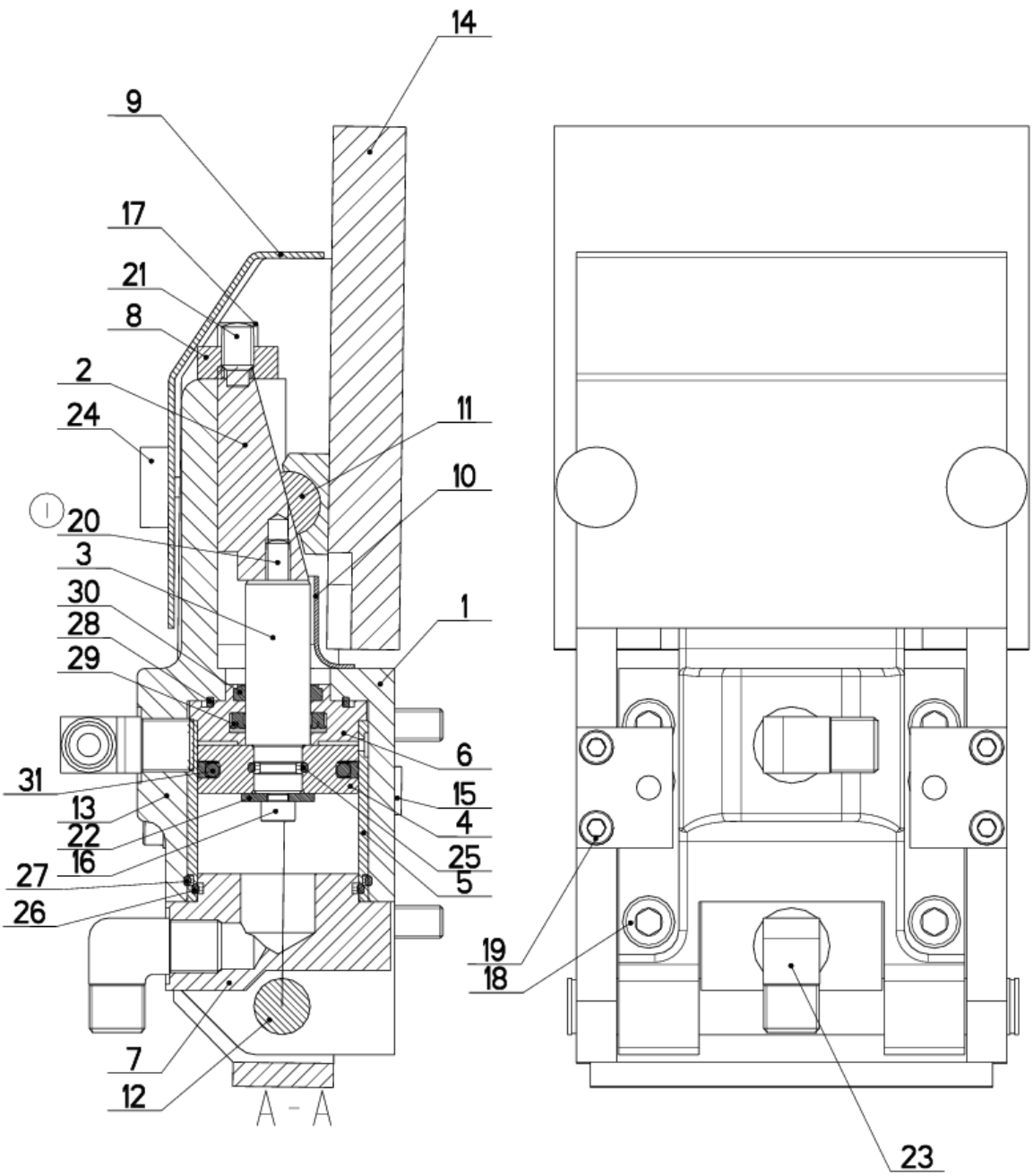

NAZEV SESTAVY	CISLO SESTAVY	STROJ
CELIST	201.2311-400	250 GAC
BOMAR	Konstruoval: MARTINEK	
	Datum: 02. 07.2014	
	Meritko: 4:5	

7.25. Kusovník / Piece list / Stückliste - Čelist / Jaw / Backe

Cislo Sestavy	Ver.	Nazev sestavy
201.2311-400	1	CELIST/JAW/BACKE

Poz.	Objednaci cislo	Ver.	Nazev polozky	Rozmer	Ks
1	30.2111-101	1	DRZAK / HOLDER / HALTER		1
2	30.2111-103	0	KLIN / WEDGE / KEIL	HR 25x25	1
3	30.2111-104	2	PISTNICE / PISTON ROD / KOLBENSTANGE	d 16	1
4	30.2111-105	0	PIST / PISTON / KOLBEN	d 45	1
5	30.2111-106	0	VALEC / ROLLER / ZYLINDER	TR 45/40H8	1
6	30.2111-107	1	VIKO / COVER / DECKEL	d 45	1
7	30.2111-108	0	VIKO / COVER / DECKEL	HR 50x30	1
8	30.2111-109	0	DORAZ / STOP PIECE / ANSCHLAG	HR 20x8	1
9	30.2111-110	1	KRYT / COVER / ABDECKUNG	P1.5-107	1
10	30.2111-111	1	KRYT / COVER / ABDECKUNG	P 1-30	1
11	30.2111-112	0	DESKA / BOARD / PLATTE	d 16	1
12	30.2111-113	0	CEP / LUG / BOLZEN	d 14	1
13	30.2111-114	0	PRILOZKA / STRAP / LASCHE		2
14	30.2311-401	0	CELIST / JAW / BACKE		1
15	31.1003-016	0	PRUZINA / SPRING / FEDER	12x2.24x56x16	2
16	90.001.25.007	0	SROUB IMBUS / ALLEN HEAD BOLT / IMBUSSCHRAUBE	M5X10	1
17	90.001.25.016	0	SROUB IMBUS / ALLEN HEAD BOLT / IMBUSSCHRAUBE	M6X12	1
18	90.001.25.033	0	SROUB IMBUS / ALLEN HEAD BOLT / IMBUSSCHRAUBE	8x25	4
19	90.001.25.089	0	SROUB IMBUS / ALLEN HEAD BOLT / IMBUSSCHRAUBE	M5X22	4
20	90.002.2D.021 (1)	0	SROUB STAVECI / ADJUSTMENT BOLT / STELLSCHRAUBE	SROUB M6X20	1
21	90.004.2D.008	0	SROUB STAVECI / ADJUSTMENT BOLT / STELLSCHRAUBE	SROUB M8X16	1
22	90.151.50.006	0	PODLOZKA / WASHER / UNTERLEGSCHEIBE	PODLOZKA 5	1
23	92.004.001	0	SROUBENI UHLOVE / ANGLE BOLTING / WINKELVERSCHRAUBUNG	37701	2
24	94.007.001	0	SROUB / BOLT / SCHRAUBE	M5x10	2
25	96.001.003	0	O-KROUZEK STATIC / STATIC O RING / O-RING STATISCH	8X2	1
26	96.001.010	0	O-KROUZEK STATIC / STATIC O RING / O-RING STATISCH	36X2	1
27	96.001.011	0	O-KROUZEK STATIC / STATIC O RING / O-RING STATISCH	40X2	1
28	96.002.016	0	KROUZEK O DYNAMICKY / DYNAMIC O RING / O-RING DYNAMISCH	32X2	1
29	96.041.001	0	TESNENI / SEALING / DICHTUNG	16x24x4 UN	1
30	96.060.001	0	KROUZEK STIRACI / SCRAPER RING / ABSTREIFRING	16x22 NBR 70	1
31	96.900.002	0	TESNENI KOMBINOVANE / COMBINATION SEALING / KOMBIDICHTUNG	PW4200400-WUAQ3	1

1.PRIDAN SROUB STAVECI M6x20. 408/ZM394 18.11.2008 SLEZACKOVA

Cislo Sestavy/Number of assembly/Nummer der Baugruppe; Verze (Ver.)/Version/Version; Nazev sestavy/Assembly title/Name der Baugruppe; Pozice (Poz.)/Position/Position; Objednaci cislo/Purchase order number/Bestellnummer; Nazev polozky/Volume title/Name der Position; Rozmer/Stock size/Abmessung

7.26. Konzola / Console / Konsole

Cislo Sestavy 201.2311-210

Ver. 0

Nazev sestavy KONZOLA/CONSOLE/KONSOLE

Poz.	Objednaci cislo	Ver.	Nazev polozky	Rozmer	Ks
1	30.2112-104	0	POUZDRO / SLEEVE / BÜCHSE	SK 17(19)	2
2	30.2311-211	2	KONZOLA / CONSOLE / KONSOLE		1
3	30.2311-212	1	VALECEK / CYLINDER / ROLLE	TRUBKA33.7x3.25	1
4	30.2311-213	0	TYC / POLE / STANGE	d12	1
5	90.003.20.001	0	SROUB STAVECI / ADJUSTMENT BOLT / STELLSCHRAUBE	SROUB M5X6	2
6	90.303.02.001	0	KOLIK / PIN / BOLZEN	KOLIK 3X16	2
7	94.006.002	0	SROUB / BOLT / SCHRAUBE	M8x25	1
8	95.001.005	0	LOZISKO / BEARING / LAGER	6001 2RS	2

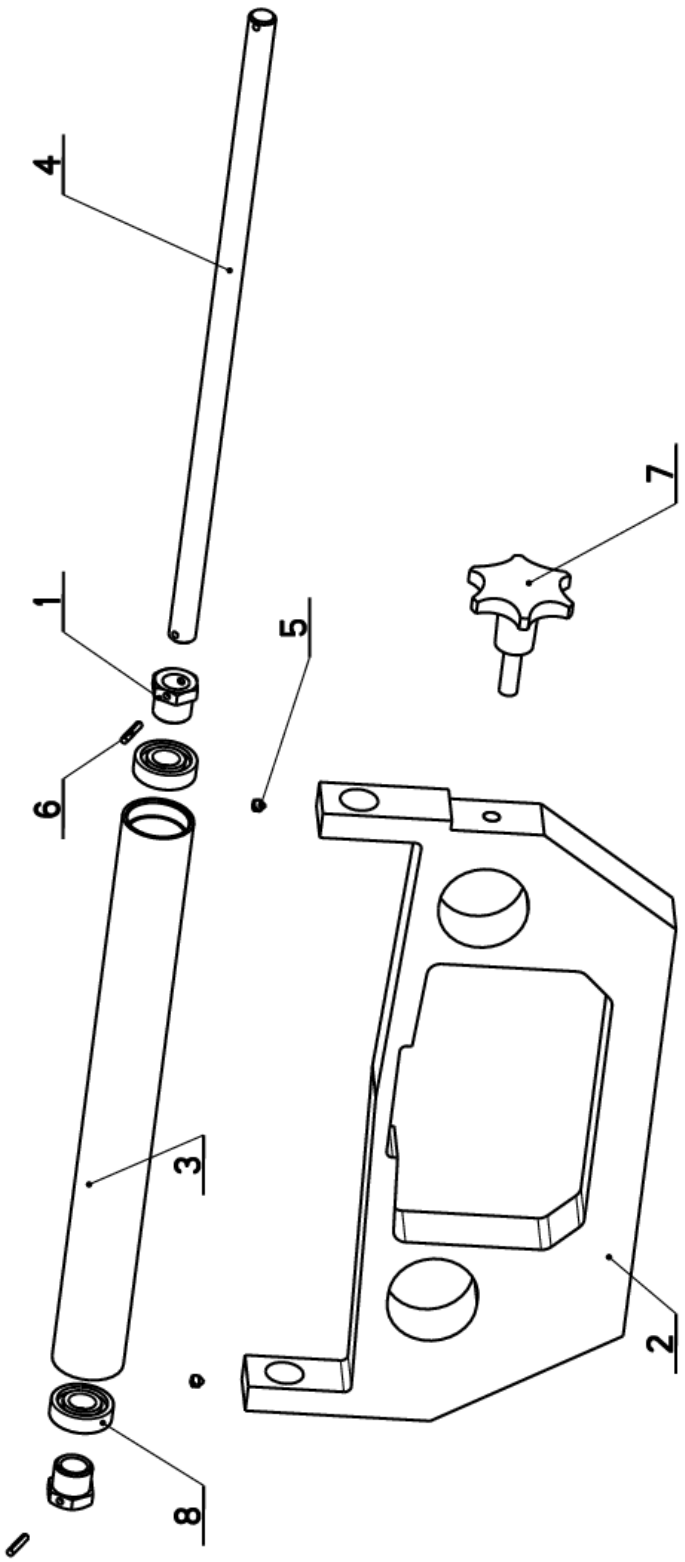

7.27. Trať / Track / Bahn

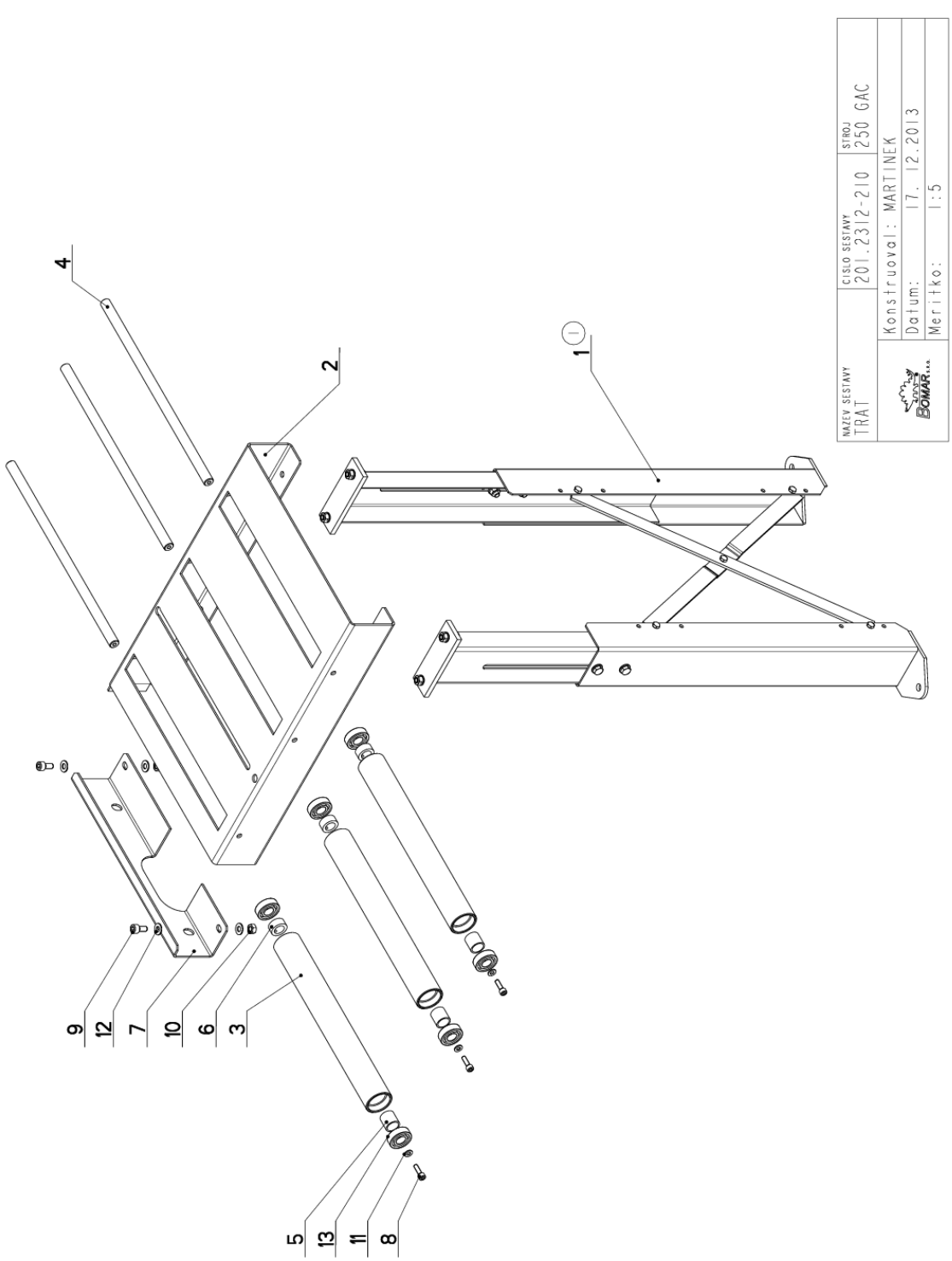

7.28. Kusovník / Piece list / Stückliste - Trať / Track / Bahn

Cislo Sestavy	Ver.	Nazev sestavy
201.2312-210	1	TRAT/TRACK/BAHN

Poz.	Objednaci cislo	Ver.	Nazev polozky	Rozmer	Ks
1	203.1614-300_M330 (1)	0	NOHA DOPRAVNIKU / FEEDER LEG / STANDER DES FOERDERERS		1
2	30.2312-211	0	RAM / FRAME / RAHMEN	P 3x570	1
3	30.2312-212	0	VALECEK / CYLINDER / ROLLE	TRUBKA 44,5x6,3	3
4	30.2312-213	0	TYC / POLE / STANGE	TYC 15	3
5	30.2312-214	0	KROUZEK DISTANCNI / DISTANCE RING / DISTANZRING	TRUBKA 22x2	3
6	30.2312-215	0	KROUZEK DISTANCNI / DISTANCE RING / DISTANZRING	TRUBKA 25x5	3
7	30.2312-216	1	DIL PRIPOJOVACI / ATTACHMENT PART / ANSCHLUSSTEIL	P 3x141	1
8	90.001.25.018	0	SROUB IMBUS / ALLEN HEAD BOLT / IMBUSSCHRAUBE	M6X20	3
9	90.001.25.031	0	SROUB IMBUS / ALLEN HEAD BOLT / IMBUSSCHRAUBE	8x16	2
10	90.100.55.005	0	MATICE / NUT / MUTTER	MATICE _ M8	2
11	90.150.50.004	0	PODLOZKA / WASHER / UNTERLEGSCHEIBE	PODLOZKA 6,4	3
12	90.150.50.005	0	PODLOZKA / WASHER / UNTERLEGSCHEIBE	PODLOZKA 8,4	4
13	95.001.015	0	LOZISKO / BEARING / LAGER	6202 2RS	6

1.ZRUS.NOHA 203.1620-200 (253.102) A NAHR.203.1614-300(253.187). 325/ZM303 17.12.2013 SLEZACKOVA

Cislo Sestavy/Number of assembly/Nummer der Baugruppe; Verze (Ver.)/Version/Version; Nazev sestavy/Assembly title/Name der Baugruppe; Pozice (Poz.)/Position/Position; Objednaci cislo/Purchase order number/Bestellnummer; Nazev polozky/Volume title/Name der Position; Rozmer/Stock size/Abmessung

7.29. Rameno / Shoulder / Sägerahmen

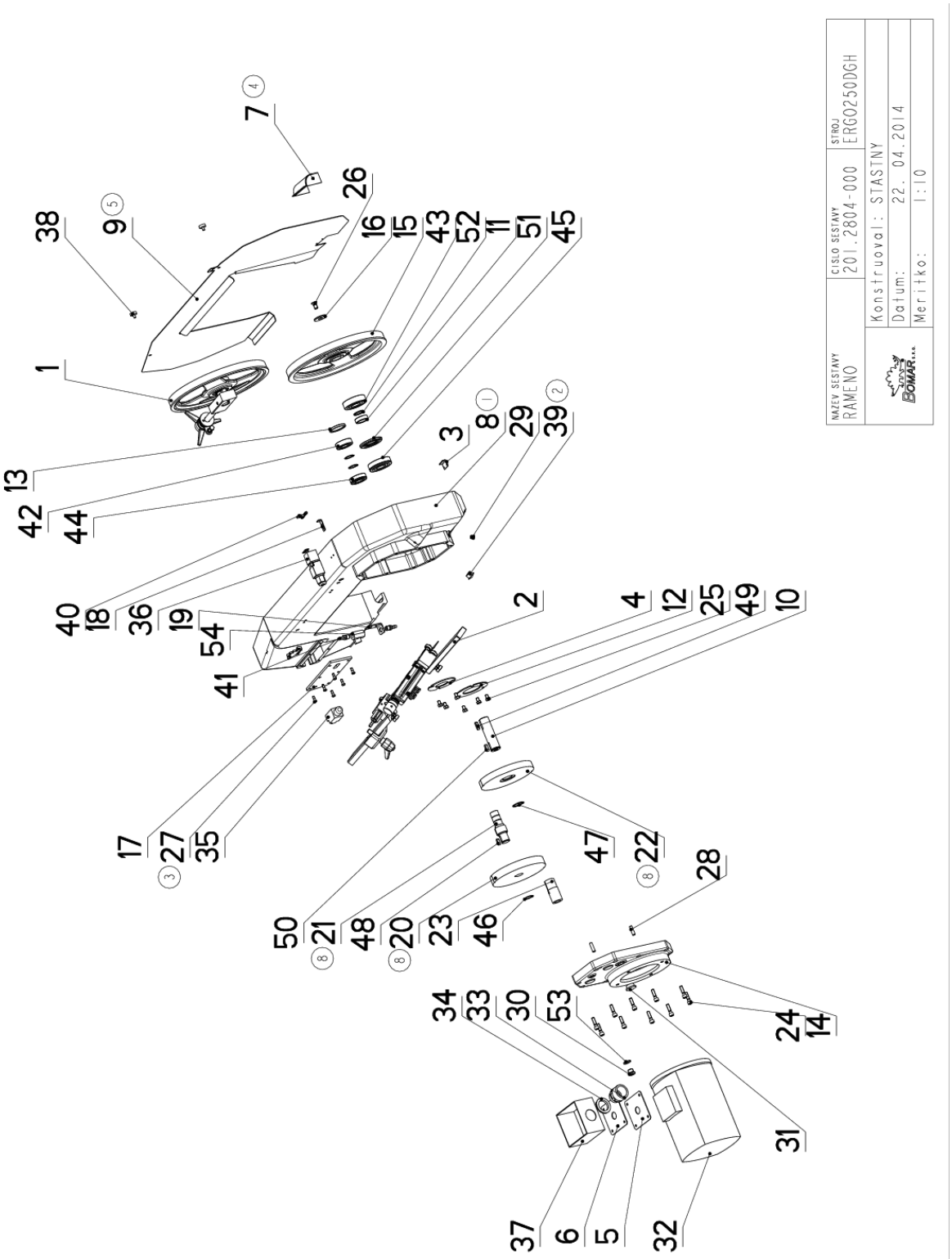

Cislo Sestavy	Ver.	Nazev sestavy
201.2804-000	8	RAMENO/SHOULDER/SÄGERAHMEN

Poz.	Objednaci cislo	Ver.	Nazev polozky	Rozmer	Ks
1	201.0508-000	0	NAPINANI / TENSIONING / SPANNUNG		1
2	201.2810-000	0	VEDENI PASU / BELT GUIDE / SÄGEBANDFÜHRUNG		1
3	30.0104-029	0	UCHYTKA / CLIP / HALTER	P 2- 36	1
4	30.0105-007	0	PRILOZKA / STRAP / LASCHE	P 2.5x90	1
5	30.0504-010	1	DESKA ELEKTRO / ELECTRIC BOARD / PLATINE	P 1.5 - 95	1
6	30.0504-011	0	GUMA / RUBBER / GUMMI	TL.2-95	1
7	30.0504-604 (4)	2	KRYT / COVER / ABDECKUNG	P 1.5x84	1
8	30.0504-751 (1)	7	RAMENO / SHOULDER / SÄGERAHMEN	80.0504-701	1
9	30.0504-753 (5)	1	KRYT NAPINANI / TENSIONING COVER / BANDSPANNUNGSABDECKUNG	P 1.5x492	1
10	30.0505-007	2	HRIDEL / SHAFT / WELLE	TYC 35	1
11	30.0505-009	1	KROUZEK / RING / RING	Tr 44,5x8	1
12	30.0505-010	0	PRILOZKA / STRAP / LASCHE	P 2.5- 108	1
13	30.0505-013	0	ZATKA / PLUG / STOPFEN	d 55	1
14	30.0505-201	1	VIKO / COVER / DECKEL	C.M.80.0705-001	1
15	30.0505-701	0	KOLO HNACI / DRIVE WHEEL / ANTRIEBSRAD		1
16	30.0508-002	0	PODLOZKA / WASHER / UNTERLEGSCHEIBE	d 40	1
17	30.0704-007	5	KRYT NAPINANI / TENSIONING COVER / BANDSPANNUNGSABDECKUNG	P 6x80	1
18	30.0704-032	2	PRILOZKA / STRAP / LASCHE	P 2 - 15	1
19	30.1814-011	2	DRZAK / HOLDER / HALTER	P 3x76	1
20	31.0505-003	1	KOLO OZUBENE / COG WHEEL / ZAHNRAD	D 176	1
21	31.0505-004 (8)	1	PREDLOHA / SHAFT / WELLE	d40	1
22	31.0505-005 (8)	0	KOLO OZUBENE / COG WHEEL / ZAHNRAD	D 180	1
23	31.0505-202 (8)	1	PASTOREK / PINION / RITZEL	d 32	1
24	90.001.25.083	0	SROUB IMBUS / ALLEN HEAD BOLT / IMBUSSCHRAUBE	M8X30	10
25	90.005.55.013	0	SROUB 6HRANNY / 6 SIDED BOLT / SECHSKANTSCHRAUBE	SROUB M8X12	6
26	90.011.27.008	0	ZAPUSTNY IMBUS / COUNTERSINK BOLT / SENKSCHRAUBE	SROUB M10X20	1
27	90.013.27.008 (3)	0	SROUB PULKULATY / HALF ROUND BOLT / HALBRUNDSCHRAUBE	M6X16	6
28	90.302.0Z.002	0	KUZEL. KOLIK S ZAV. / TAPER PIN + THREAD / KEGELBOLZEN + GEWINDE	KOLIK 8X30	2
29	90.400.5Z.001	0	ZATKA / PLUG / STOPFEN	M10x1	1
30	90.400.5Z.002	0	ZATKA / PLUG / STOPFEN	M16x1.5	1
31	90.400.5Z.003 (2)	0	ZATKA / PLUG / STOPFEN	M 24x1.5	1
32	91.001.007	0	ELEKTROMOTOR / ELECTRIC MOTOR / ELEKTROMOTOR		1
33	91.071.004	0	VYVODKA / BUSHING / TÜLLE	VYVODKA	1
34	91.072.007	0	MATICE / NUT / MUTTER	MATICE	1

Cislo Sestavy/Number of assembly/Nummer der Baugruppe; Verze (Ver.)/Version/Version; Nazev sestavy/Assembly title/Name der Baugruppe; Pozice (Poz.)/Position/Position; Objednaci cislo/Purchase order number/Bestellnummer; Nazev polozky/Volume title/Name der Position; Rozmer/Stock size/Abmessung

7.31. Rameno / Shoulder / Sägerahmen

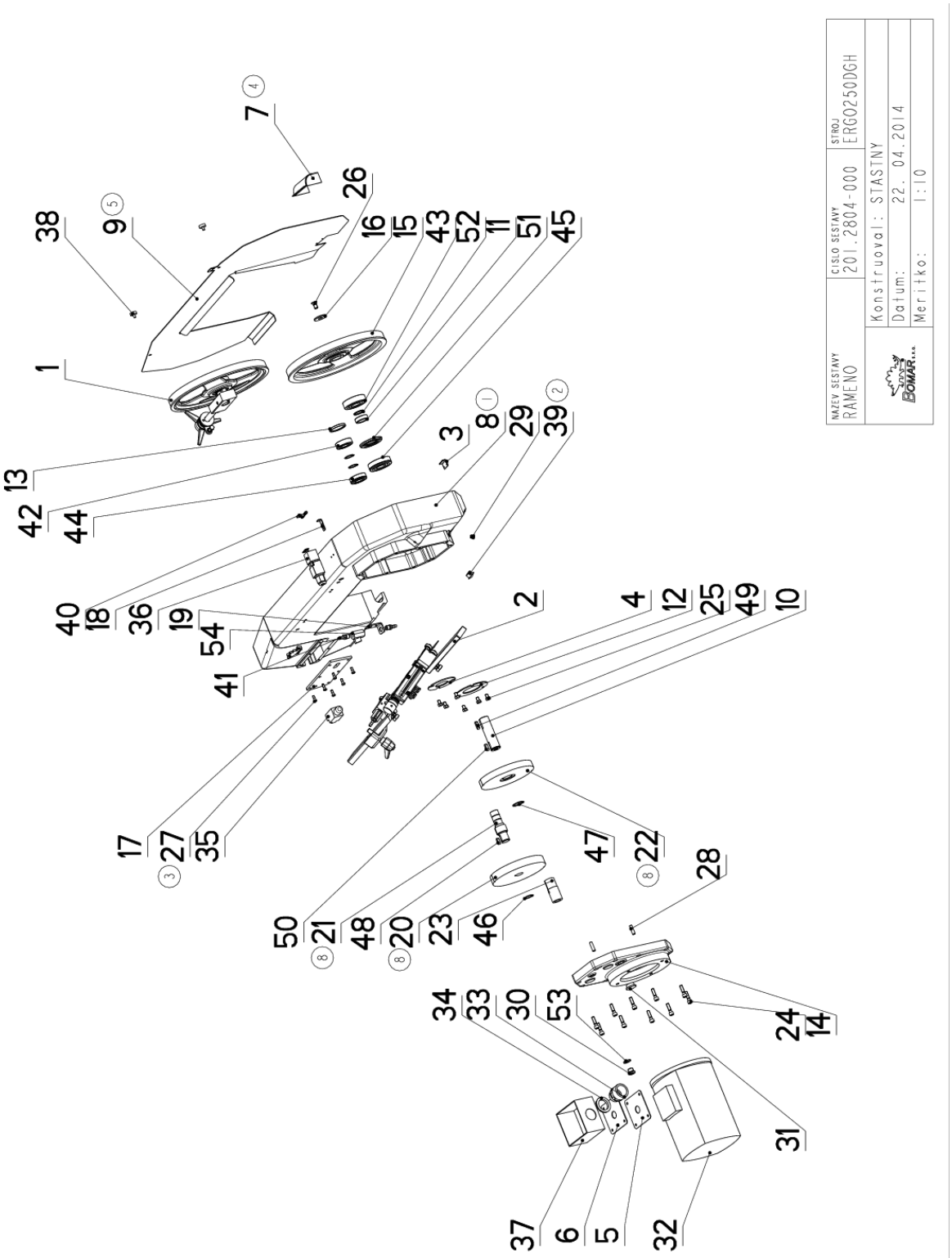

7.32. Kusovník / Piece list / Stückliste - Rameno / Shoulder / Sägerahmen

35	91.173.007	0	SPINAC KONCOVY / END SWITCH / ENDSCHALTER	-RIWK	1
36	91.173.012	0	SPINAC KONCOVY / END SWITCH / ENDSCHALTER		1
37	91.190.004	0	KRABICE ELEKTRO / ELECTRO BOX / ELEKTRODOSE		1
38	94.007.002	0	SROUB / BOLT / SCHRAUBE		2
39	94.102.002	0	UCPAVKA / PLUG / STOPFEN	22	1
40	94.200.001	0	REDUKCE / REDUCTION / ADAPTOR / REDUKTION	6	1
41	94.202.002	0	REDUKCE / REDUCTION / ADAPTOR / REDUKTION	GES 6/R1/4"	2
42	95.001.018	0	LOZISKO / BEARING / LAGER	6205 2RS	1
43	95.001.025	0	LOZISKO / BEARING / LAGER	6306 2RS	1
44	95.003.002	0	LOZISKO / BEARING / LAGER	6205AN	1
45	95.003.003	0	LOZISKO / BEARING / LAGER	6306AN	1
46	95.800.012	0	SEGR HRIDEL. / OUTSIDE SAFETY RING / SICHERUNGSRING AUSSEN	POJISTNY KROUZEK 25	3
47	95.800.013	0	SEGR HRIDEL. / OUTSIDE SAFETY RING / SICHERUNGSRING AUSSEN	POJISTNY KROUZEK 30	1
48	95.810.006	0	PERO TESNE / TIGHT SPRING / PASSFEDER	PERO 8X7X20	1
49	95.810.007	0	PERO TESNE / TIGHT SPRING / PASSFEDER	PERO 8X7X25	1
50	95.810.023	0	PERO TESNE / TIGHT SPRING / PASSFEDER	PERO 8X7X22	1
51	95.830.005	0	GUFERO / GIT SEAL / DICHTUNG	GUFERO 40X72X7	1
52	96.002.024	0	KROUZEK O DYNAMICKY / DYNAMIC O RING / O-RING DYNAMISCH	30X2	1
53	96.081.001	0	KROUZEK TESNICI / SEAL RING / DICHTUNGSRING	23x15x3	1
54	99.260.003	0	VENTIL / VALVE / VENTIL	1/4"	1

1.VYMENA RAMENE A KRYTU RAMENE - ZRUSENA SOUCAST 30.0504-701 A NAHR. 30.0504-751,ZRUSENA SOUC.30.0504-702 A NAHR. 30.0504-752. 558/ZM281 19.10.2006 SLEZACKOVA
2.PRIDAN OLEJOZNAK 90.400.5Z.003. 633/ZM021 12.2.2007 SLEZACKOVA
3.ZRUS.KARTACEK 201.0704-100,PRID.KRYT 30.0504-603,ZRUS.SROUB IMBUS M6X16 (90.001.25.017)A NAHRAZEN SROUBEM S PULKULATOU HLAVOU M6x16 (90.013.27.008).183/ZM211 26.11.2009 SLEZACKOVA
4.ZRUSEN KRYT KARTACKU 30.0504-603 A NAHRAZEN 30.0504-604. 052/ZM050 22.2.2010 SLEZACKOVA
5.ZRUSEN KRYT 30.0504-752 A NAHRAZEN 30.0504-753. 036/ZM095 12.4.2010 SLEZACKOVA
7.ZRUS.KRYT 30.0704-021. 077/ZM098 22.4.2014 SLEZACKOVA
8.ZRUS.SOUC.30.0505-004 A NAHR.31.0505-004,ZRUS.30.0505-002 A NAHR.31.0505-202,ZRUS.30.0505-005 A NAHR.31.0505-005. 003/ZM005 16.1.2015 SLEZACKOVA

Cislo Sestavy/Number of assembly/Nummer der Baugruppe; Verze (Ver.)/Version/Version; Nazev sestavy/Assembly title/Name der Baugruppe; Pozice (Poz.)/Position/Position;
Objednaci cislo/Purchase order number/Bestellnummer; Nazev polozky/Volume title/Name der Position; Rozmer/Stock size/Abmessung

7.33. Napínání / Tensioning / Spannung

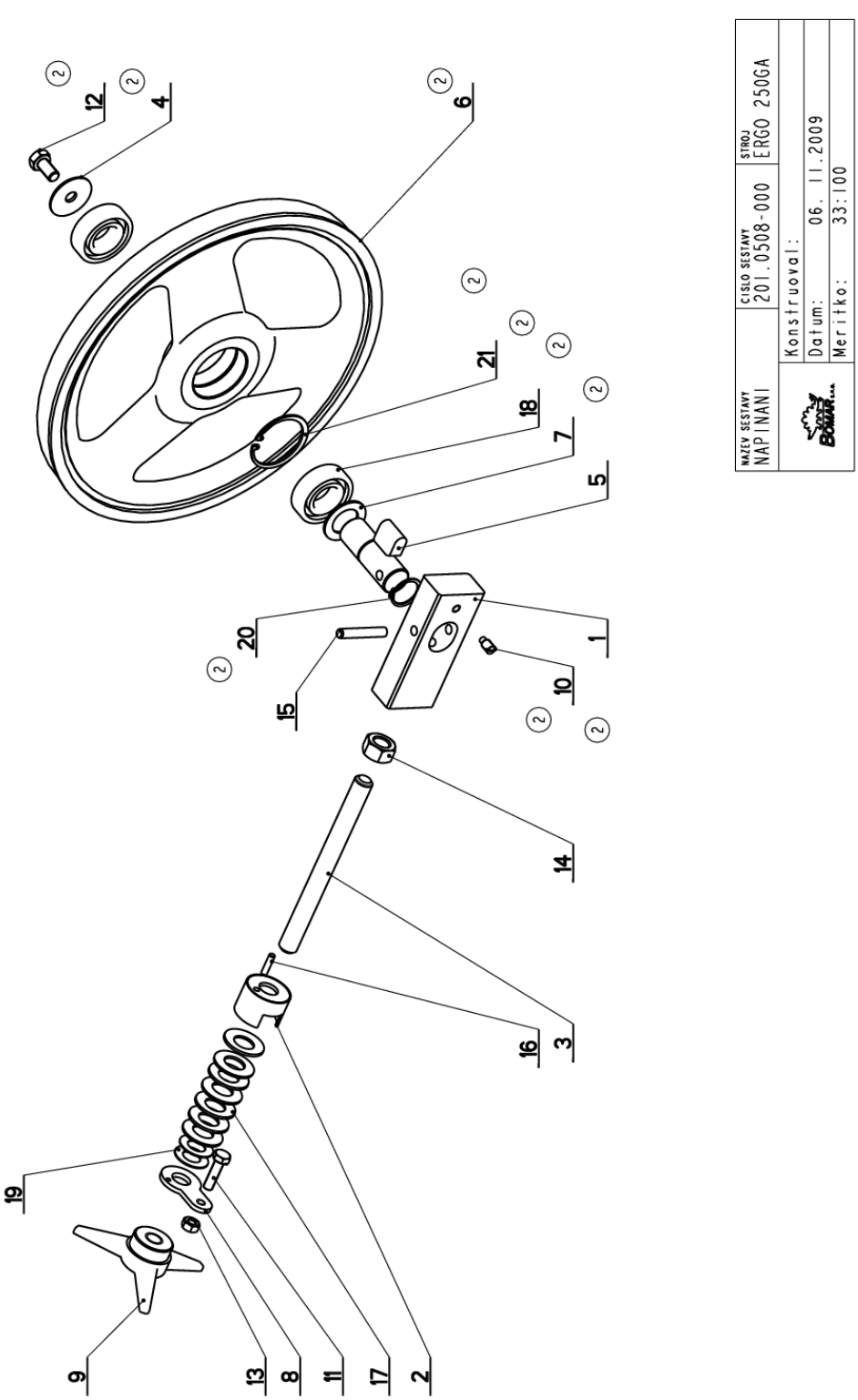

Cislo Sestavy	Ver.	Nazev sestavy
201.0508-000	0	NAPINANI/TENSIONING/SPANNUNG

Poz.	Objednaci cislo	Ver.	Nazev polozky	Rozmer	Ks
1	30.0104-002	0	HRANOL / BLOCK / PRISMA	HR 50x 30	1
2	30.0104-004	2	DRZAK / HOLDER / HALTER		1
3	30.0303-005	0	SROUB / BOLT / SCHRAUBE	M16	1
4	30.0505-011 (2)	0	PODLOZKA / WASHER / UNTERLEGSCHEIBE	TYC 40	1
5	30.0508-004 (2)	0	CEP NAPINANI / TENSIONING LUG / SPANNUNGSBOLZEN		1
6	30.0508-701 (2)	4	KOLO NAPINACI / TENSIONING WHEEL / UMLENKRAD		1
7	30.0702-023 (2)	0	KROUZEK DISTANCNI / DISTANCE RING / DISTANZRING		1
8	30.0704-025	3	DRZAK / HOLDER / HALTER	P 4x 36	1
9	31.0104-006	0	HVEZDICE / STAR WHEEL / STERN	PLAST	1
10	90.004.2D.008 (2)	0	STAV SR S CIP / ADJUSTMENT BOLT / STELLSCHRAUBE	SROUB M8X16	1
11	90.005.55.017	0	6 HR SROUB ZIN / 6 SIDED BOLT / SECHSKANTSCHRAUBE	SROUB M8X30	1
12	90.005.55.023	0	6 HR SROUB ZIN / 6 SIDED BOLT / SECHSKANTSCHRAUBE	SROUB M10X20	1
13	90.100.55.005	0	MATICE DIN 934 / NUT / MUTTER	MATICE _ M8	1
14	90.100.55.008	0	MATICE DIN 934 / NUT / MUTTER	MATICE _ M16	1
15	90.300.0Z.012	0	KOLIK VALC. KAL. / PIN / BOLZEN	KOLIK 8X50	1
16	90.303.0Z.008	0	KOLIK PRUZNY / PIN / BOLZEN	KOLIK 5X20	1
17	90.350.0Z.002	0	PRUZINA TALIROVA / DISC SPRING / TELLERFEDER	35,5X18,3X2,0X2,8	7
18	95.001.018 (2)	0	LOZISKO / BEARING / LAGER	6205 2RS	2
19	95.750.001	0	KROUZEK KU / KU RING / KU-RING	16x1	2
20	95.800.012	0	KROUZEK POJIST.VNEJS / OUTSIDE SAFETY RING / SICHERUNGSRING AUßEN	POJISTNY KROUZEK 25	1
21	95.801.009 (2)	0	SEGR DIRA / INSIDE SAFETY RING / SICHERUNGSRING INNEN	POJISTNY KROUZEK 52	1

(1) ZMENA 30.0702-023 NA 30.0508-006, 0508-701 NA 0508-102, 0508-004 NA 0508-007, 0104-002 NA 0508-008, 95.001.018 NA 95.001.036
0505-011 NA 0508-002, 95.801.009 NA 95.801.010 14.5.2004 URICAR

2.ZRUSENA ZMENA 1. NEBYLA REALIZOVANA. 266/ZM255 28.7.2008 SLEZACKOVA

7.35. Vedení pásu / Belt guide / Sägebandführung

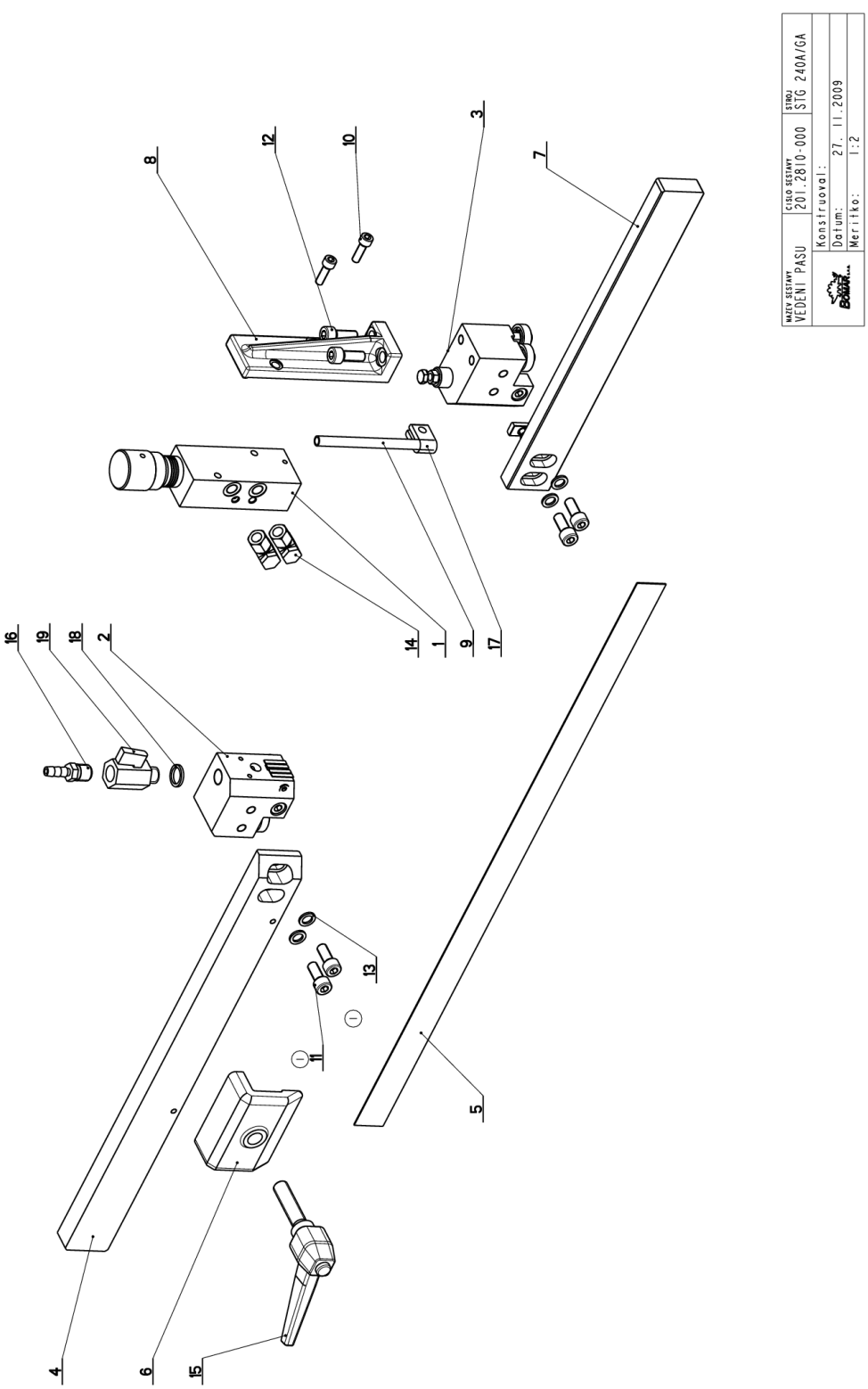

Cislo Sestavy	Ver.	Nazev sestavy
201.2810-000	0	VEDENI PASU/BELT GUIDE/SÄGEBANDFÜHRUNG

Poz.	Objednaci cislo	Ver.	Nazev polozky	Rozmer	Ks
1	251.218	0	REGULACE PRITLAKU / PRESSURE REGULATION / SCHNITTDRUCKREGULATION		1
2	201.0110-100	0	KOSTKA VODICI / LEAD CUBE / FÜHRUNGSKLOTZ		1
3	201.2810-200	0	KOSTKA VODICI / LEAD CUBE / FÜHRUNGSKLOTZ		1
4	30.0104-015	0	LISTA / TRIM / LEISTE	TYC 40x20	1
5	30.0504-961	0	PAS PILOVY / SAW BELT / SÄGEBAND	2910x25(7)x0.90	1
6	30.0704-010	0	UPINKA / FASTENER / SPANNEISEN	ODLITEK	1
7	30.0704-014	0	LISTA / TRIM / LEISTE	TYC 40x15	1
8	30.2804-001	0	DRZAK / HOLDER / HALTER		1
9	30.3510-004	0	TRUBKA / TUBE / ROHR	TR 8x 1	1
10	90.001.25.018	0	SROUB IMBUS / ALLEN HEAD BOLT / IMBUSSCHRAUBE	M6X20	2
11	90.001.25.032 (1)	0	SROUB IMBUS CERNENY / ALLEN HEAD BOLT / IMBUSSCHRAUBE	8x20	4
12	90.001.25.104	0	SROUB IMBUS / ALLEN HEAD BOLT / IMBUSSCHRAUBE	M8X22	2
13	90.163.00.002 (1)	0	PODLOZKA / WASHER / UNTERLEGSCHEIBE	PODLOZKA 8	4
14	92.003.104	0	SROUBENI / BOLTING / VERSCHRAUBUNG	607002	2
15	94.008.009	0	PAKA UPINACI / ATTACHMENT LEVER / SPANNHEBEL	M12x50	1
16	94.202.002	0	REDUKCE / REDUCTION / ADAPTOR / REDUKTION	GES 6/R1/4"	1
17	94.204.001	0	DRZAK / HOLDER / HALTER		1
18	96.080.001	0	KROUZEK / RING / RING	17.8x13.5x2	1
19	99.260.001	0	VENTIL / VALVE / VENTIL		1

1.PRID.4xPODLOZKA NORD LOCK M8 90.163.00.002,ZRUS.4xSROUB M8x16 A NAHRZEN SROUBEM M8x20 . 161/ZM148 13.5.2008 SLEZACKOVA

7.37. Kostka vodící / Lead cube / Führungsklotz

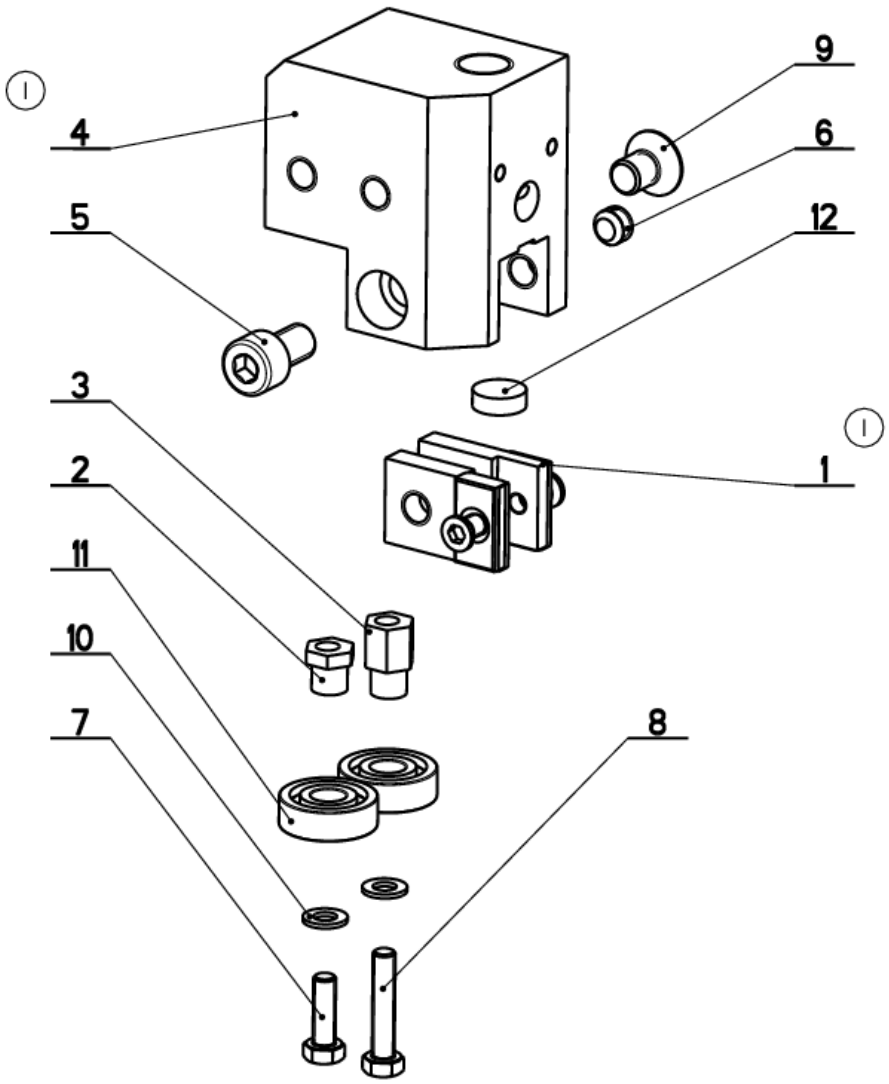

NAZEV SESTAVY	CISLO SESTAVY	STROJ
KOSTKA VODICI	201.0110-100	STG-240

Konstruoval:
Datum: 06. 11.2009
Meritko: 4:5

7.38. Kusovník / Piece list / Stückliste - Kostka vodící / Lead cube / Führungsklotz

Cislo Sestavy	Ver.	Nazev sestavy
201.0110-100	0	KOSTKA VODICI/LEAD CUBE/FÜHRUNGSKLOTZ

Poz.	Objednaci cislo	Ver.	Nazev polozky	Rozmer	Ks
1	30.0104-018	0	EXCENTR / CAM / EXZENTER	SK10	1
2	30.0104-019	0	EXCENTR / CAM / EXZENTER	SK10	1
3	30.0104-021 (1)	0	DRZAK / HOLDER / HALTER		2
4	30.0104-032 (1)	2	KOSTKA VODICI / LEAD CUBE / FÜHRUNGSKLOTZ	TYC 60x40	1
5	90.001.25.030	0	SROUB IMBUS / ALLEN HEAD BOLT / IMBUSSCHRAUBE	M8X14	1
6	90.002.20.009	0	SROUB STAVECI / ADJUSTMENT BOLT / STELLSCHRAUBE	SROUB M8X6	1
7	90.005.55.003	0	SROUB 6HRANNY / 6 SIDED BOLT / SECHSKANTSCHRAUBE	SROUB M5X16	1
8	90.005.55.005	0	SROUB 6HRANNY / 6 SIDED BOLT / SECHSKANTSCHRAUBE	SROUB M5X25	1
9	90.011.27.007	0	ZAPUSTNY IMBUS / COUNTERSINK BOLT / SENKSCHRAUBE	SROUB M8X12	1
10	90.150.50.003	0	PODLOZKA / WASHER / UNTERLEGSCHEIBE	PODLOZKA 5,3	2
11	95.001.001	0	LOZISKO / BEARING / LAGER	608 2RS	2
12	99.040.002	0	TVRDOKOV / HARD METAL / HM-SEGMENT	d 12	1

1.ZRUS.KOSTKA 30.0104-017 A NAHR.30.0104-032,ZRUS.DRZAK 30.0104-020 A NAHR. 30.0104-021. 297/272 12.8.2008 KRPEC

Cislo Sestavy/Number of assembly/Nummer der Baugruppe; Verze (Ver.)/Version/Version; Nazev sestavy/Assembly title/Name der Baugruppe; Pozice (Poz.)/Position/Position; Objednaci cislo/Purchase order number/Bestellnummer; Nazev polozky/Volume title/Name der Position; Rozmer/Stock size/Abmessung

7.39. Kostka vodící / Lead cube / Führungsklotz

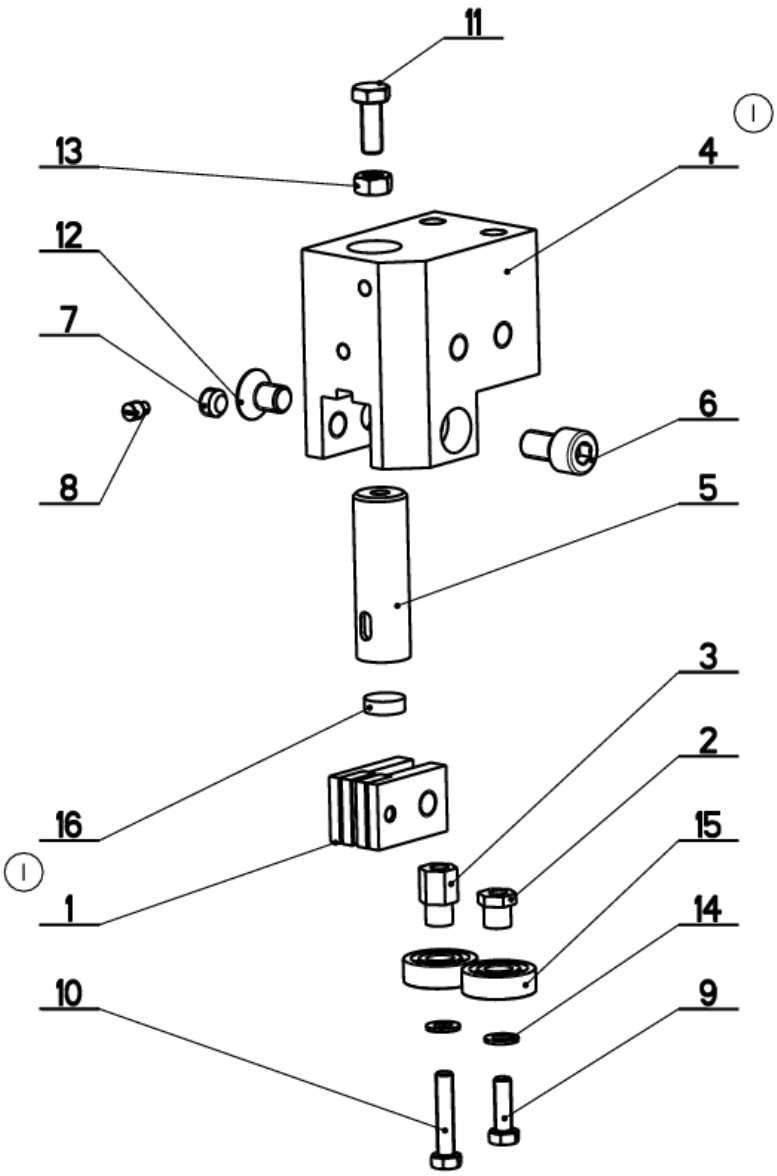

NAZEV SESTAVY	CISLO SESTAVY	STROJ
KOSTKA VODICI	201.2810-200	STG 240A/GA
	Konstruoval:	
	Datum: 06. 11.2009	
	Meritko: 3:5	

7.40. Kusovník / Piece list / Stückliste - Kostka vodící / Lead cube / Führungsklotz

Cislo Sestavy	Ver.	Nazev sestavy
201.2810-200	0	KOSTKA VODICI/LEAD CUBE/FÜHRUNGSKLOTZ

Poz.	Objednaci cislo	Ver.	Nazev polozky	Rozmer	Ks
1	30.0104-018	0	EXCENTR / CAM / EXZENTER	SK10	1
2	30.0104-019	0	EXCENTR / CAM / EXZENTER	SK10	1
3	30.0104-021 (1)	0	DRZAK / HOLDER / HALTER		2
4	30.2804-012 (1)	2	KOSTKA VODICI / /	HR 60x40	1
5	30.3510-002	1	DRZAK TVRDOKOVU / POA HOLDER / HM-HALTER	TYC 16	1
6	90.001.25.030	0	SROUB IMBUS / ALLEN HEAD BOLT / IMBUSSCHRAUBE	M8X14	1
7	90.002.20.009	0	SROUB STAVECI / ADJUSTMENT BOLT / STELLSCHRAUBE	SROUB M8X6	1
8	90.004.20.017	0	SROUB STAVECI / ADJUSTMENT BOLT / STELLSCHRAUBE	SROUB M5X8	1
9	90.005.55.003	0	SROUB 6HRANNY / 6 SIDED BOLT / SECHSKANTSCHRAUBE	SROUB M5X16	1
10	90.005.55.005	0	SROUB 6HRANNY / 6 SIDED BOLT / SECHSKANTSCHRAUBE	SROUB M5X25	1
11	90.005.55.007	0	SROUB 6HRANNY / 6 SIDED BOLT / SECHSKANTSCHRAUBE	SROUB M6X16	1
12	90.011.27.007	0	ZAPUSTNY IMBUS / COUNTERSINK BOLT / SENKSCHRAUBE	SROUB M8X12	1
13	90.100.55.004	0	MATICE / NUT / MUTTER	MATICE _ M6	1
14	90.150.50.003	0	PODLOZKA / WASHER / UNTERLEGSCHEIBE	PODLOZKA 5,3	2
15	95.001.001	0	LOZISKO / BEARING / LAGER	608 2RS	2
16	99.040.002	0	TVRDOKOV / HARD METAL / HM-SEGMENT	d 12	1

1.ZRUS.KOSTKA 30.2804-002 A NAHR.30.2804-012,ZRUS.DRZAK 30.0104-020 A NAHR.201.0104-021. 340/ZM343 16.10.2008 SLEZACKOVA

Cislo Sestavy/Number of assembly/Nummer der Baugruppe; Verze (Ver.)/Version/Version; Nazev sestavy/Assembly title/Name der Baugruppe; Pozice (Poz.)/Position/Position;
Objednaci cislo/Purchase order number/Bestellnummer; Nazev polozky/Volume title/Name der Position; Rozmer/Stock size/Abmessung