Series **Ergonomic**

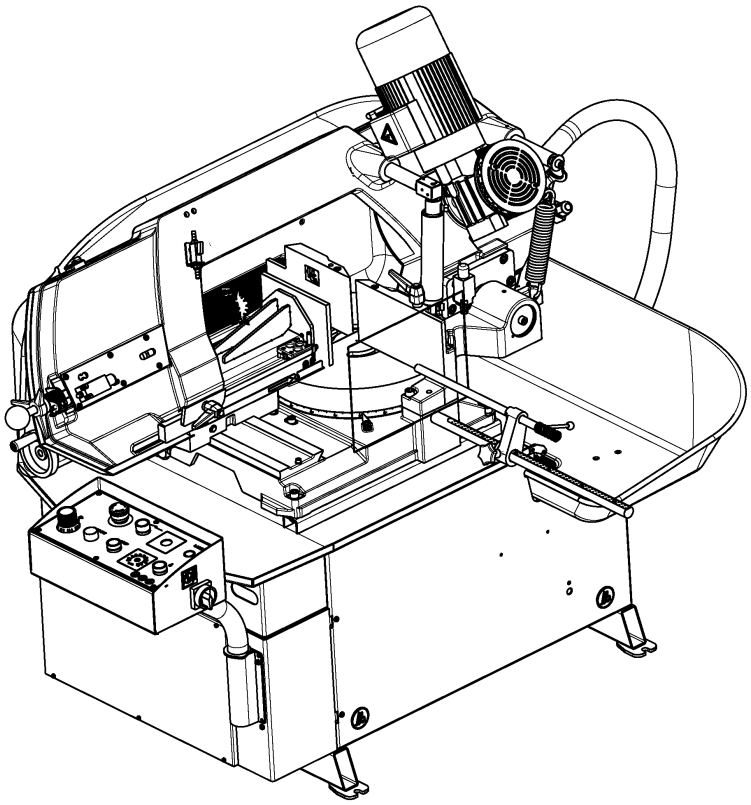

Ergonomic 320.258 DG

Operating instructions

Before transporting and using the machine, please read the instructions thoroughly!

Seriové číslo / Serien Nummer / Serial Number _____

Service and information

Your BOMAR dealer:

Direct BOMAR contact:

BOMAR spol. s r.o.
Těžební 1236/1
62700 Brno
Czech Republic, EU

telefon: +420 – 533 426 100
fax: +420 – 533 426 109
e-mail: info@bomar.cz
www: http://www.bomar.cz

We are available:

Mondays to Fridays 7^{00} – 16^{00}

Version:

1.30 / Oct. 2023

rev. 1

BOMAR, spol. s r.o. © – Subject to modifications and amendments.

EC/EU Declaration of Conformity

[1) 2)] We:

BOMAR, spol. s r.o.
Těžební 1236/1
627 00 Brno, Czech Republic
Id. No: 48908827

declare herewith

that the following designated device based on its conception and construction as well as the design launched by us meets the relevant basic safety requirements of the decrees of the government.

This statement applies exclusively to the machine device in conditions in which it was brought to the market. It does not apply to parts subsequently added by the end user or to modifications performed subsequently by the end user.

In the event of any device modification not approved by us this declaration shall lose its validity

Name: **Band Saw**

Type : **Ergonomic 320.258 DG**

Serial number: 011 – 100 000

Manufacturer **BOMAR, spol. s r.o., Těžební 1236/1, 627 00 Brno**

Product data

Determination: for cross dividing and cutting of rolled and towed bars and profiles made of steel, stainless steel, non-ferrous metals and plastics

Description: Stand, table, cutting unit with the saw band and drive, clamping device, cooling system, el. switch board with control panel.

Pneumatic *NO* ☒ *YES* ☐ Hydraulic *NO* ☒ *YES* ☐ Control system *NO* ☒ *YES* ☐

Technical data:

Cutting rate	20-120 m.min^{-1}
Cutting angle	-45°- to -60°
Characteristic cutting range	320 x 258 mm

Documentation:

Technical documentation for this machine device was elaborated in compliance with Government regulation no. 176/2008, Annex 7, part A.

The device meets relevant requirements of the given directives: **2006/42/EC**
2014/30/EU

The applied harmonized standards, National standards and technical specifications:

ČSN EN ISO 12100:2011 + Opr.1:2020 + Opr.2 :2021	ČSN EN ISO 16093:2018	ČSN EN ISO 13857:2021
ČSN EN ISO 4413:2011		ČSN EN 60204 -1 ed.3:2019
ČSN EN 55011 ed.4:2017 + A1: 2017+ A11:2020 + A2:2020	ČSN EN 61000-6-2 ed.4:2019	ČSN EN IEC 61000-6-4 ed.3:2019

The conformity judging was performed according to §12, art..3a), of the Law no. 22/1997 Coll. as amended

Brno,.15.10.2023

Point of issue, datum

BOMAR, spol. s r.o.
Těžební 1236/1, 627 00 Brno
Czech Republic
IČO: 48908827
DIČ: CZ48908827

Alfred Pichlmann, Managing Director

Name and function of the responsible subject, signature

1) Name, address and identification number of the subject issuing the conformity declaration (producer of importer)
2) Person authorized to complete the technical documentation
3) The authorized or accredited body co-operating on the conformity judging

!	If the equipment is installed without safety equipment offered by BOMAR, spol. s ro or its agents and used by the customer (or buyer) then EC declaration loses validity. EC Declaration of conformity is valid only if customer (buyer) installed the BOMAR safety equipment with the machine or with some other with equivalent safety device in accordance with current applicable regulations and standards. All machine elements and components that were built into the device by BOMAR, spol. s ro have been declared "identical" to a safety device, as offered by BOMAR, spol. s ro or its agents.

Content

1. BEZPEČNOSTNÍ POKYNY / SICHERHEITSHINWEISE / SAFETY NOTES 9

1.1. Machine determination 11
1.2. Protective clothing and personal safety 11
1.3. Safety notes for machine operator 12
1.4. Safety notes for the servicing and repairs 13
1.4.1. Safety notes for the servicing and repairs on hydraulic unit 13
1.5. Safety instructions for laser radiation sources 13
1.6. Safety notes for the cooling 14
1.6.1. Instructions for first aid 14
1.7. Safety machine accessories 14
1.7.1. Emergency Stop Switch 14
1.7.2. Arm cover 15
1.7.3. Saw band covers 16
1.7.4. Saw band stretching and rupture inspection 16
1.8. Umístění bezpečnostních značek / Verteilung der Sicherheitszeichen / Position of safety symbols 17
1.9. Umístění štítku stroje / Maschinenschild position / Position of machine label 18

2. DOKUMENTACE STROJE / DOKUMENTATION DER MASCHINEN / MACHINE DOCUMENTATION 19

2.1. Technická data / Technische Daten / Technical data 21
2.2. Rozměrové schéma / Aufstellzeichnung / Installation diagram 22
2.3. Popis / Bescreibung / Description 23
2.4. Transportation and stocking 24
2.4.1. Conditions for transportation and stocking 24
2.4.2. Transport and stocking preparations 24
2.4.3. Transport and stocking 24
2.4.4. Transportní schéma / Transport schema / Transport schneme 25
2.5. Activation 26
2.5.1. Machine working conditions 26
2.6. Band saw unpacking and assembling 26
2.6.1. Installation of the length stop for the material length setting 26
2.6.2. Attachment of the cooling liquid tub 28
2.6.3. Assembly of the hand wheel 28
2.6.4. Machine installing and leveling 29
2.6.5. Kotevní plan / Verankerungsplan / Grounding plan 30
2.6.6. Electrical connection 31
2.6.7. Check the direction of the saw band 31
2.6.8. Inspection of the connection to the electrical network 32
2.6.9. Filling of the cooling system 32
2.7. Machine functions check 32
2.8. Machine disposal after lifetime 32
2.9. Saw band 33
2.9.1. Saw band size 33
2.9.2. Selection of the saw band tooth system 33
2.9.3. Saw band running-in 33
2.9.4. Tables for teeth selection 34

3. OVLÁDÁNÍ STROJE / BEDIENUNG DER MASCHINE / MACHINE CONTROL 35

3.1. Starting the band saw and switching on the safety circuits 37
3.2. Control elements 38
3.3. Machine control 40
3.3.1. Cutting 40
3.4. Machine settings 41
3.4.1. Setting of the material length 41
3.4.2. Setting of the cutting angle 43
3.4.3. Setting of the optimal span of the guiding cubes 45
3.4.4. Cutting speed adjustment 45
3.4.5. Speed adjustment of the arm lowering 45
3.4.6. Setting the type of cooling 46
3.4.7. Laser-liner for markingthe cut (optional accessories) 46
3.4.8. Device for regulation of clamping pressure (optional accessory) 47
3.5. Material insertion 49
3.5.1. Selecting means of manipulation 49
3.5.2. Insertion 49
3.5.3. Bundle material cutting 49

3.5.4. Hydraulic material bundle clamp (optional accessories) 49

4. ÚDRŽBA STROJE / WARTUNG / MACHINE SERVICE 51

4.1. Saw band dismantling 53
4.2. Saw band installation 54
4.3. Saw band stretching and inspection 56
4.3.1. Saw band stretching 57
4.3.2. Tensomat (optional accessories) 57
4.3.3. Saw band inspection 58
4.4. Adjustment 59
4.4.1. Saw band run adjustment 59
4.4.2. Hard metal guides adjustment on the machine 59
4.4.3. Guide cube adjustment 60
4.4.4. Brush adjustment 60
4.4.5. Halogen lighting of working area (optional accessory) 61
4.4.6. Adjusting the limit switch of the saw band stretching 62
4.4.7. Saw frame lower position stop adjustment 62
4.4.8. Adjustment of the limit switch of saw frame lower stop 62
4.4.9. Throttle valve adjustment 64
4.5. Cooling agents and chip disposal 64
4.5.1. Coolant inspection 64
4.5.2. Cooling liquid preparation 65
4.5.3. Micronizer MicroBox – mist lubrication 24V (optional accessories) 66
4.5.4. Halogen lighting of working area (optional accessory) 70
4.5.5. Third cooling inflow (optional accessory) 71
4.6. Chips disposal 72
4.6.1. Tool cleaning machines from chips after cutting. (optional accessory) 72
4.7. Gearbox oils and greases 74
4.7.1. Gearbox oils 74
4.7.2. Lubrication greases 74
4.7.3. Lubrication 75
4.7.4. Hydraulic oils 75
4.7.5. Maintenance of hydraulics 76
4.8. Machine cleaning 77
4.9. Worn pieces replacement 77
4.9.1. Hard metal guides replacement 77
4.9.2. Saw band guiding rollers replacement 78
4.9.3. Worn brush replacement 80
4.9.4. Stretching wheel replacement 80
4.9.5. Driving wheel replacement 82
4.9.6. Cooling pump replacement 84

5. ZÁVADY / STÖRUNGEN / TROUBLESHOOTING 87

5.1. Mechanical problems 89
5.2. Electrical problems 91

6. SCHÉMATA / SCHEMAS / SCHEMATICS 93

6.1. Elektrická schémata / Elektroschemas / Wiring diagrams 95
6.1.1. 3x400V+PE, 50Hz (B1/B2) 95
6.1.2. 3x230V+PE, 50Hz (B3) 109
6.1.3. 3x230V+PE, 50/60Hz (T3) 123
6.2. Hydraulické schema / Hydraulisches Schéma / Hydraulic diagram 136

7. VÝKRESY SESTAV PRO OBJEDNÁNÍ NÁHRADNÍCH DÍLŮ / ZEICHNUNGEN FÜR BESTELLUNG DER ERSATZTEILE / DRAWING ASSEMBLIES FOR SPARE PARTS ORDER 139

7.1. Ergonomic 320.258 DG 140
7.2. Kusovník / Piece list / Stückliste - Ergonomic 320.258 DG 141
7.3. Ergonomic 320.258 DG 142
7.4. Kusovník / Piece list / Stückliste - Ergonomic 320.258 DG 143
7.5. Chlazení / Cooling / Kühlung 144
7.6. Kusovník / Piece list / Stückliste - Chlazení / Cooling / Kühlung 145
7.7. Podstavec / Base / Untersatz 146
7.8. Kusovník / Piece list / Stückliste - Podstavec / Base / Untersatz 147
7.9. Vana/ Tank/ Wanne 148
7.10. Kusovník / Piece list / Stückliste - Vana/ Tank/ Wanne 149
7.11. Konzola otočná / Turnable consol / Drehkonsole 150
7.12. Kusovník / Piece list / Stückliste - Konzola otočná / Turnable consol / Drehkonsole 151
7.13. Kartáč / Brush / Bürste 152
7.14. Kusovník / Piece list / Stückliste - Kartáč / Brush / Bürste 153
7.15. Rozvaděč elektro / Electro distributor / Schaltschrank 154
7.16. Kusovník / Piece list / Stückliste - Rozvaděč elektro / Electro distributor / Schaltschrank 155

7.17. Ovládací panel / Control panel / Bedienpult....156
7.18. Kusovník / Piece list / Stückliste Ovládací panel / Control panel / Bedienpult....157
7.19. Rameno / Saw arm / Sägerahmen....158
7.20. Kusovník / Piece list / Stückliste - Rameno / Saw arm / Sägerahmen....159
7.21. Pohon / Drive / Antrieb....160
7.22. Kusovník / Piece list / Stückliste Pohon / Drive / Antrieb....161
7.23. Vedení pásu / Belt guide / Sägebandführung....162
7.24. Kusovník / Piece list / Stückliste - Vedení pásu / Belt guide / Sägebandführung....163
7.25. Kostka vodící / Lead cube / Führungsklotz....164
7.26. Kusovník / Piece list / Stückliste - Kostka vodící / Lead cube / Führungsklotz....165
7.27. Kostka vodící / Lead cube / Führungsklotz....166
7.28. Kusovník / Piece list / Stückliste - Kostka vodící / Lead cube / Führungsklotz....167
7.29. Napínání / Tensioning / Spannung....168
7.30. Kusovník / Piece list / Stückliste - Napínání / Tensioning / Spannung....169
7.31. Válec zvedací / Lifting cylinder / Hebezylinder....170
7.32. Kusovník / Piece list / Stückliste - Válec zvedací / Lifting cylinder / Hebezylinder....171
171
7.33. Stůl / Table / Tisch....172
7.34. Kusovník / Piece list / Stückliste - Stůl / Table / Tisch....173
7.35. Svěrák / Vice / Schraubstock....174
7.36. Kusovník / Piece list / Stückliste - Svěrák / Vice / Schraubstock....175
7.37. Doraz / Stop piece / Anschlag....176
7.38. Kusovník / Piece list / Stückliste - Doraz / Stop piece / Anschlag....177
7.39. Doraz / Stop piece / Anschlag....178
7.40. Kusovník / Piece list / Stückliste - Doraz / Stop piece / Anschlag....179

8. VÝKRESY SESTAV PRO OBJEDNÁNÍ NÁHRADNÍCH DÍLŮ – VOLITELNÉ VYBAVENÍ / ZEICHNUNGEN FÜR BESTELLUNG DER ERSATZTEILE - OPTIONALE ZUBEHÖR / DRAWING ASSEMBLIES FOR SPARE PARTS ORDER – OPTIONAL ACCESSORIES....181

8.1. Odměřování / Measuring / Gehrungsmessung....183
8.2. Laser-ukazovátko / Laser-Liner / Laser Liner....184
8.3. Upínání horní / Top clam / Spannvorrichtung oben....185

9. VOLITELNÉ VYBAVENÍ KOSTKA VODICÍ/ OPTIONALE ZUBEHÖR FÜHRUNGSKLOTZ/ OPTIONAL ACCESSORIES LEAD CUBE....187

9.1. Rameno / Saw arm / Sägerahmen....188
9.2. Kusovník / Piece list / Stückliste - Rameno / Saw arm / Sägerahmen....189
9.3. Vedení pásu / Belt guide / Sägebandführung....190
9.4. Kusovník / Piece list / Stückliste - Vedení pásu / Belt guide / Sägebandführung....191
9.5. Kostka vodící / Lead cube / Führungsklotz....192
9.6. Kusovník / Piece list / Stückliste - Kostka vodící / Lead cube / Führungsklotz....193
9.7. Kostka vodící / Lead cube / Führungsklotz....194
9.8. Kusovník / Piece list / Stückliste - Kostka vodící / Lead cube / Führungsklotz....195

1. Bezpečnostní pokyny / Sicherheitshinweise / Safety notes

The operating instructions must be read by any person, who gets in touch with the machine during transportation, installation, using, servicing, reparation, stocking or removal!

Attention!
The operating instructions must be available at the machine position! Keep the operating instructions in a good condition!

The operating instructions include relevant information. The operator must familiarize himself with the installation and operation, safety notes and machine servicing, to reach maximum reliability and lifespan. The operating instructions serve to avoid risks, which are linked with work on the machine. Before transporting and using the machine, please read the instructions thoroughly!

1.1. Machine determination

The band saw **Ergonomic 320.258 DG** is determined for cutting and shortening of rolled bars and drawn bars as well as profiles from steels, stainless steels, non-ferrous metals and plastics **with cutting angles -45° to 60°.**

Combustible materials are excluded from cutting! Any other usage and operation outside this range are unauthorized and the manufacturer/supplier does not accept any responsibility for any damages resulting from such misuse. **The operator has full responsibility!**

The machine is equipped with safety and protective measures for both the operator and the machine to be protected. Nevertheless, these measures cannot prevent all injuries. All personnel must read this chapter and understand it, before they start to work on the machine. **Always follow the instructions about work safety!** The personnel must take into account other aspects of the risk, which include the conditions of the working place and the material.

1.2. Protective clothing and personal safety

Wear fitting clothes! Loosely fitting clothes may be caught in the moving machine parts and cause serious injuries.

Attention!
Gloves can be worn only when manipulating with the material or replacing parts! The machine and its accessories must be inactive!
If the machine is running, you must not wear gloves! There is a higher risk of getting caught in the moving machinery!

Wear protective gloves! Material cuts and saw band have sharp edges and may cause injuries.

Wear protective shoes with non-skid soles! Unsuitable shoes may cause balance loss and following injury. Falling pieces may cause serious injuries too.

Wear protective goggles! Chips and cooling liquid may damage your eyes.

Always wear ear protection! Most of the machines emit up to 80 dB and may damage your hearing.

Do not wear jewellery and always tie back long hair! Moving machine parts can catch jewellery or loose hair and may cause serious injuries.

Operate the machine only when you are fit enough to work. Illnesses or injuries diminish concentration. **Avoid machine work, which may compromise the safety of you and your colleagues!**

Attention!
Mind the safety signs on the machine. Do not remove or damage them!

Attention!
Machine can be operated by person older than 18 years!
Machine can be operated only by a person physically and mentally fit for this activity

1.3. Safety notes for machine operator

Machine can be operated only by one person. Machine operator is responsible for other people present near the machine.

Close covers before starting the machine and check, if the covers are not damaged. Damaged covers must be repaired or changed immediately. Do not start the machine, if the cover is removed! Check, if the electric cables are not damaged.

Follow the instructions and orders about work safety!
Read the operating instructions, before you start to work on the machine! Keep the operating instructions in good condition!

- Do not hold the material for clamping in the vice and when cutting!

Attention!
Do not connect the machine to electricity if the covers are removed. Do not touch the electrical equipment or wiring.

- Do not operate the buttons and switches on the control panel, when you have gloves!
- For machine starting take care, that there is nobody in the working area of the machine (the working area of the vice, the saw band, the saw arm etc.).
- Under no circumstances touch the rotating elements.
- Work on the machine only when the machine is in good condition!
- Check at least once in a shift, if the machine is not damaged. If the machine is damaged, you must bring the machine to a halt and inform your superior!
- Keep your working area clean! Ensure sufficient lighting in the working area.
- Take off the spilt water or the oil from the floor and dry it. Do not touch the cooling liquid with bare hands! Do not set the nozzle of the cooling liquid, when the machine is started running.
- Do not remove the chips from the working area of the machine, when the machine is running!
- Do not use compressed air for the machine cleaning or for the chip removal!
- Use the protective instruments for chip removal!

1.4. Safety notes for the servicing and repairs

Switch off the main switch and lock it, before you start service work! Otherwise, there is a possibility of starting the machine accidentally.

Only qualified person can do the servicing and repairs. For parts replacement, use only those, which are identical with the originals. Otherwise, there is possibility of health hazard. Use only recommended types of hydraulic oils, oils and lubricants!

Attention!
Only a qualified professional can carry out the servicing and repairs of the electrical equipment! Take special care during the work with electrical equipment. High voltage shock can have fatal consequences! Always follow the work safety instructions! Otherwise, there is possibility of heavy injury!

Do not remove lock the limit switches or safety equipment! Any use of the saw, accessories or machine parts other than that intended by the BOMAR, spol. s r.o. company is not permitted. The guarantee on this product will be lost afterward and BOMAR, spol. s r.o. takes no responsibility for damage caused.

1.4.1. Safety notes for the servicing and repairs on hydraulic unit

Compliance with the principles of cleanness is a basic requirement for trouble-free operation of hydraulic equipment. Hydraulic components are products made with high precision, and any contamination leads to a reduction of lifetime and even malfunction. The consequences are very difficult and expensive to remove.

Always use clean tools. Never put parts and fasteners which are a part of the hydraulic circuit on a dirty surface. The best cleaning agent is crepe paper. The fibers of the cleaning cloths can also cause malfunction.

Remove the protective caps from the threaded chamber just before the assembly of the unit.

Flush hoses and pipes before mounting with gasoline or other cleaning agent and blow compressed air through them.

All fittings must be properly tightened. However, do not use brute strength.

1.5. Safety instructions for laser radiation sources

Laser radiation sources may be used on the machine.

Warning signs and information about the corresponding laser class are placed near each laser source.

It is forbidden to look into the laser beams!

Depending on the design and optional equipment of the saw, laser radiation sources can be located in particular:

- on the saw feeder
- before the main vice of the band saw
- on a safety fence (laser barrier)
- on the section line projection device

Commonly used laser safety classes:

1 (laser barriers)

1M (laser barriers)

3R (Laser-Liner)

Attention!
It is necessary for correct functionality of a laser to regularly check the patency of the laser ray on the sensor and to clean the laser from impurities (clean rag + spirit) after easch shift. Be careful during the cleaning in order the laser was not been schratched and broken!.

1.6. Safety notes for the cooling

Attention!
- *When handling the coolant always keep to the work safety directives and instructions of the manufacturer.*
- *When handling cooling agents always wear safety fluid-proof gloves!*
- *Wear protective goggles!*
- *Cooling liquid can get in contact with your eyes and may cause permanent severe injuries*

1.6.1. Instructions for first aid

1. Pull off and safely remove polluted, soaked clothing.
2. If inhaled, go out on fresh air or look for first aid treatment.
3. Wash with water and eventually treat with crème any points of contact with the skin.
4. Flush your eyes with water and seek out a doctor.
5. If swallowed, drink a lot of water and induce vomiting. Look for medical help

1.7. Safety machine accessories

The machine is equipped with safety accessories. They protect the operator from injuries and the machine from damage. The safety accessories are blocking accessories, emergency switches and covers. Check the function of the safety accessories once a week. If the safety accessories are not fulfilling their function, stop your work and repair or change the safety accessories.

Enhanced risk!
Do not come into or intervene in the cutting area. Otherwise, there is a possibility of heavy injury.

1.7.1. Emergency Stop Switch

Emergency Stop Switch is used for emergency switching – off the machine in case defect or health hazard. By pressing **Emergency Stop Switch** will immediately stop all dangerous machine movements.

If any damages or fault appears, immediately press Emergency Stop Switch!

It is possible to release the pressed button by twisting of the upper part of the button.

The **Emergency Stop Switch** is placed at the control panel of the machine.

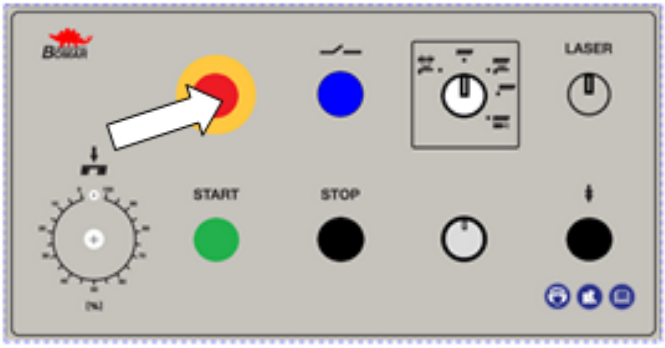

Release of the pressed button is possible by turning the upper part of the button.

1.7.2. Arm cover

If the cover is opened during operation, the limit switch is opened and the band saw is stopped. The machine cannot be run with the arm open even in the service mode.

Make sure the arm cover is closed before starting the machine!

1.7.3. Saw band covers

These three covers cover the band of the saw

- from the moveable guiding cube to the arm
- from the jaw of the vice to the arm (both sides)
- Never turn the band drive on, if these covers are not mounted

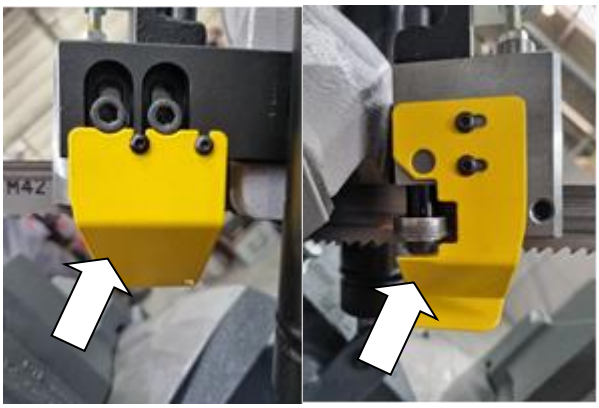

1.7.4. Saw band stretching and rupture inspection

This device checks the saw band stretching and causes an immediate machine shut – down in case the band ruptures.

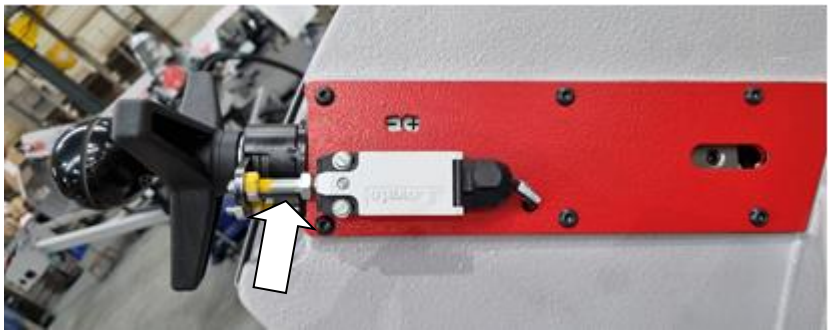

The device contains a limit switch. Its setting is described in the chapter Machine maintenance. Check the stretching carefully and periodically and adjust it eventually.

1.8. Umístění bezpečnostních značek / Verteilung der Sicherheitszeichen / Position of safety symbols

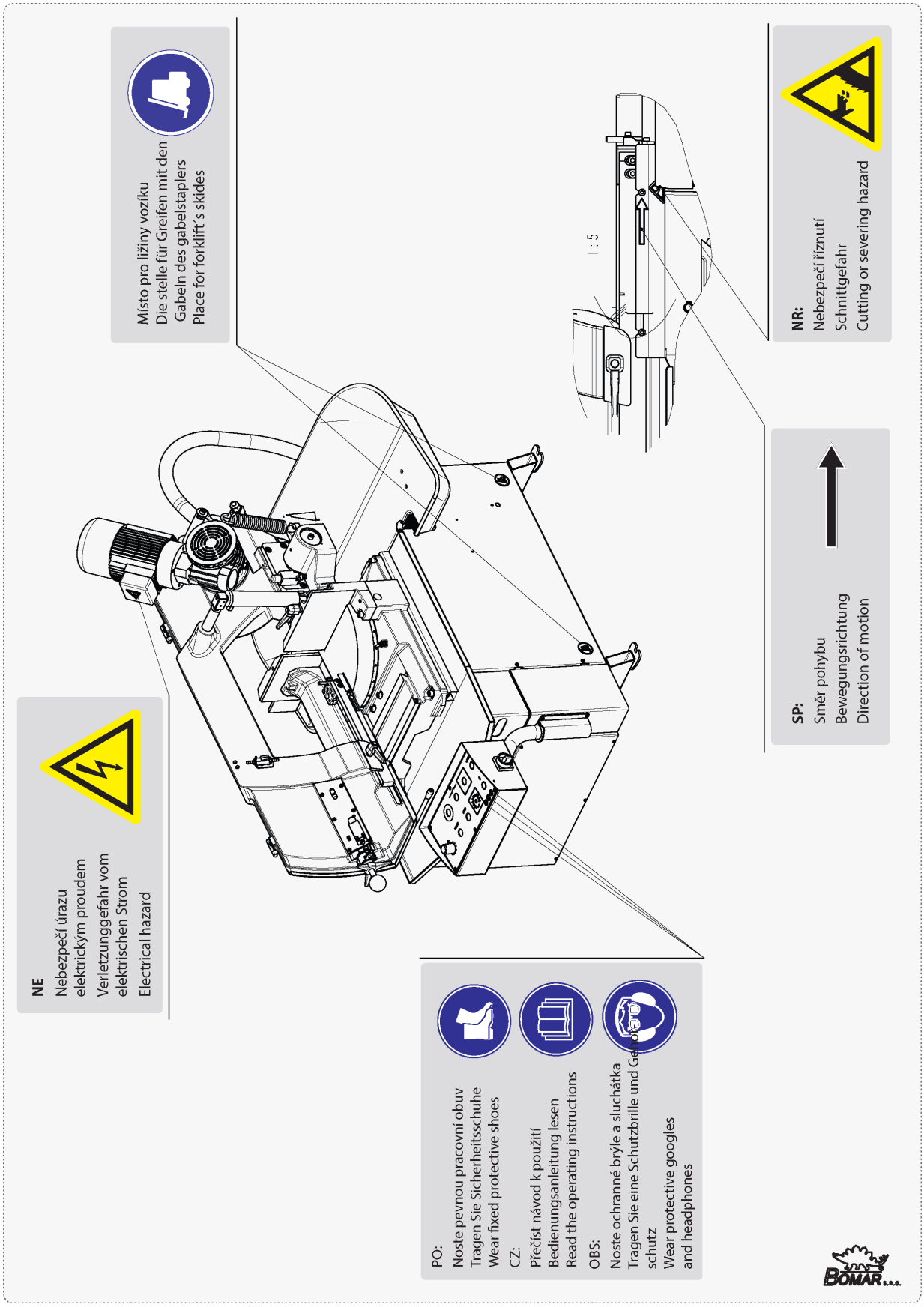

Bezpečnostní pokyny
Sicherheitshinweise
Safety notes

1.9. Umístění štítku stroje / Maschinenschild position / Position of machine label

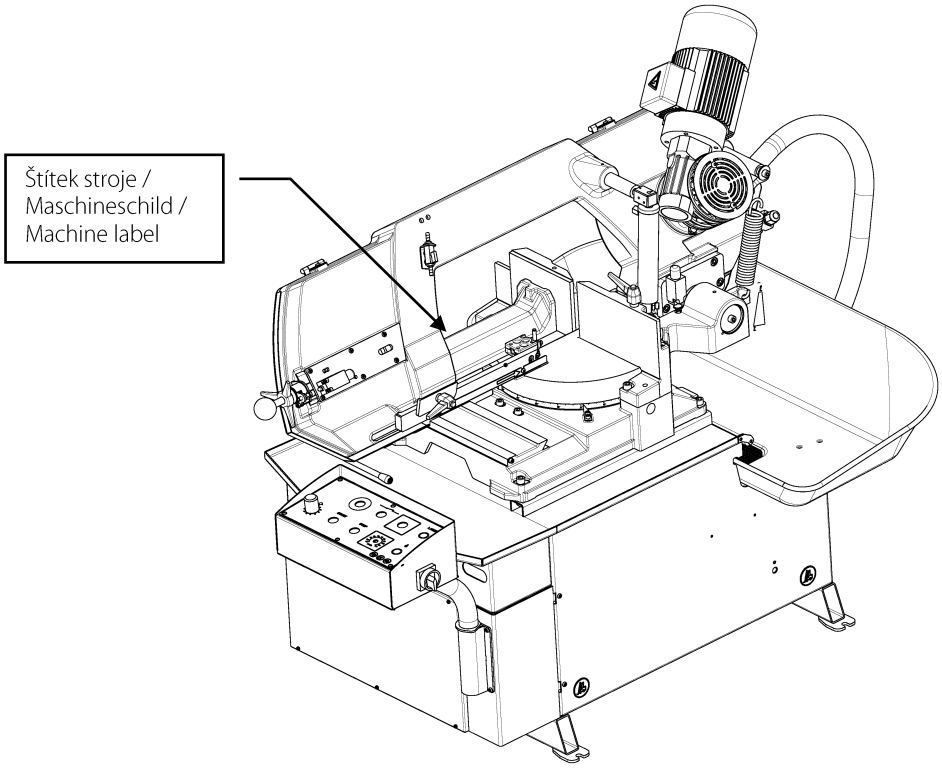

2. Dokumentace stroje / Dokumentation der Maschinen / Machine documentation

2.1. Technická data / Technische Daten / Technical data

Hmotnost stroje / Maschinengewicht / Machine weight:	
Hmotnost / Gewicht / Weight	390 kg
Rozměry stroje / Maschinengröße / Machine size :	
Délka / Länge / Lenght	2000 mm
Šířka / Breite / Width	1150 mm
Výška / Höhe / Height	1700 mm
Elektrické vybavení / Elektrische Ausrüstung / Electical equipment:	
Napájení / Versorgungsspannun / Supply voltage	~ 3 × 400/230V, 50/60Hz, TN-C-S
Příkon / Gesamptschlusswert / Total Input	1,6 kW
Max.jištění / Max. Vorschaltsicherung / Max. Fuse	16 A
Krytí / Schutzart / Protection	IP 54
Akustický tlak / Schalldruckpegel / Acoustic pressure:	
Ergonomic 320.258 DG	L_{Aeqv}= 59 / 65 dB*
Pohon – pilový pás / Atrieb - Sägeband / Drive – saw band:	
• Typ / Typ / Type	MI70 – PAM90 20/1 - FP - 120 - B14 99.001.260
• Výkon / Leistung / Output	1,5 kW
Jmenovité otáčky / Motornenndrehzahl / Nominal speed	1390 min^{-1}
Chladící zařízení / Kühlmiteleinrichtung / Cooling equipment:	
• Typ / Typ / Type	68POMPA70M150 + FILTRO – PA, 230 V, 50/60Hz 91.020.035
• Výkon / Leistung / Output	0,05 kW
Obsah nádrže / Volumen vom Kühlmittel / Capacity	20 dm^3
Rozměr pásu / Sägebanddimension / Band size:	
2910×27(25)×0,90 mm	
Řezná rychlost / Schnittgeschwindigkeit / Cutting speed:	
20–120 m/min	
Nejmenší řezaný průměr/ Kleinster zu sägender Durchmesser/ The smallest cut diameter	
Ø 5 mm	
Nejmenší řezaná délka/ Kleinster zu sägender Länge/ The smallest cut length	
20 mm	

Řezné rozsahy / Schnittbereiche / Cutting size:

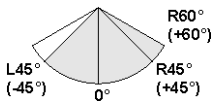

0°	Ø258	320 x 100	275 x 250	250 x 250
R 45°	Ø210	210 x 100	185 x 245	195x195
L 45°	Ø185	195 x 100	150 x 250	170 x 170
R 60°	Ø135	135 x 100	135 x 110	110 x 110

Acoustic pressure level:

The equivalent level of the acoustic pressure A (noise) in the position of the operator is L_{Aeqv}= 59 / 65 dB. The values are indicating the emission levels and may not present safe working levels. Among the factors, which influence the real values of the operator's exposure, are properties of the workshop room, type of cut material and level of wear of the saw band – these may significantly influence the exposure levels.

2.2. Rozměrové schéma / Aufstellzeichnung / Installation diagram

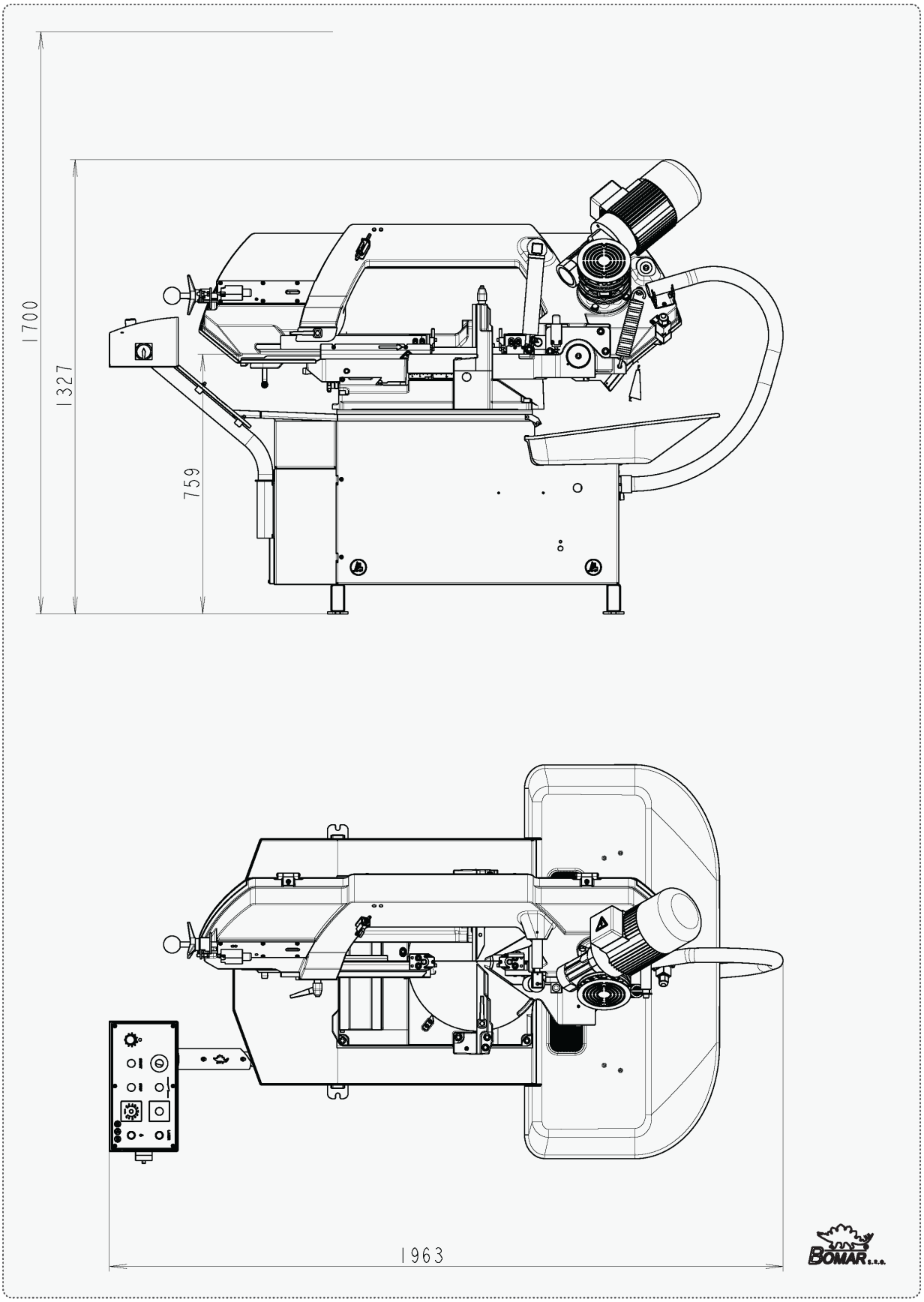

2.3. Popis / Bescreibung / Description

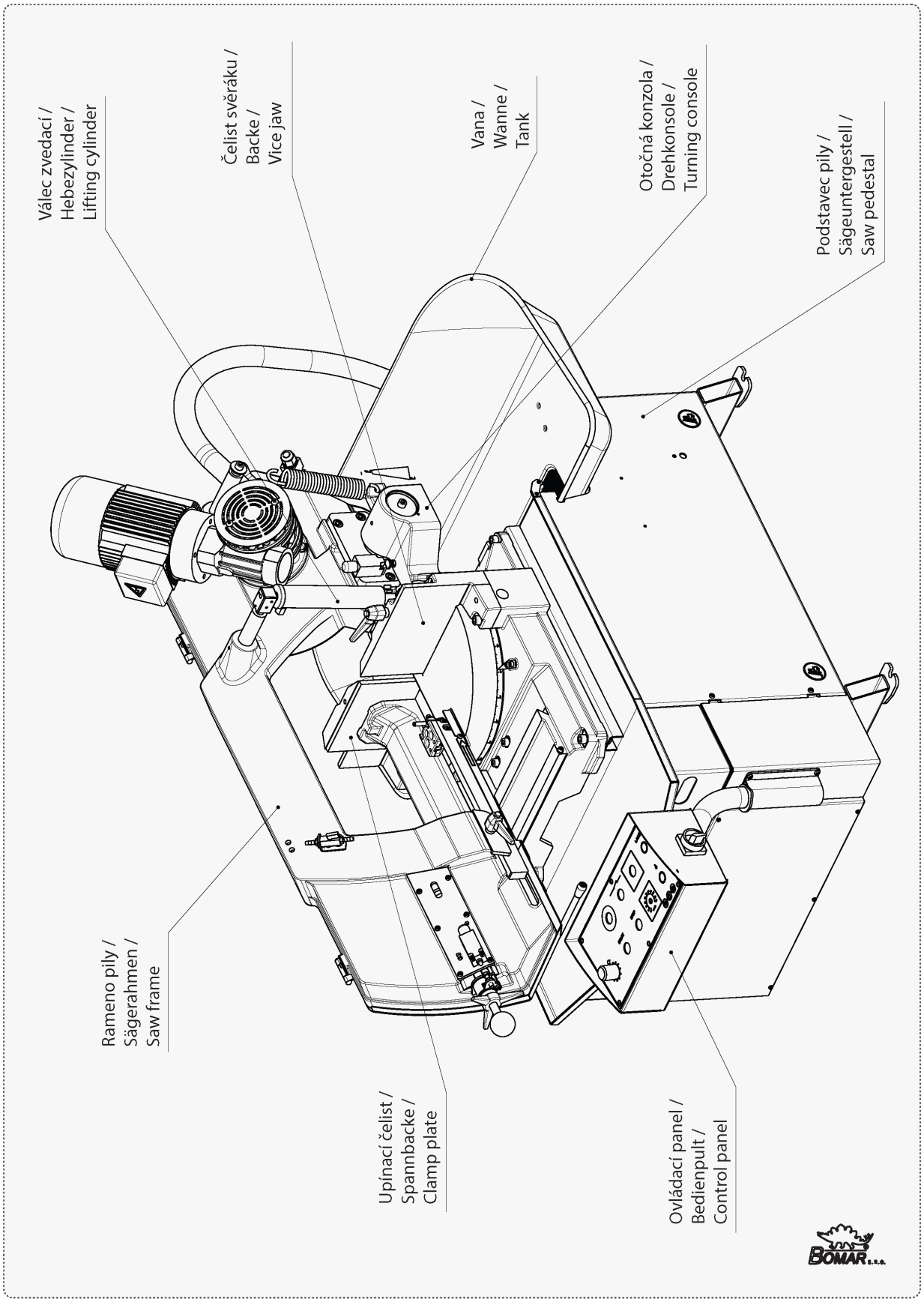

2.4. Transportation and stocking

2.4.1. Conditions for transportation and stocking

Follow the recommendations of the manufacturer for transportation and stocking! If the recommendations are not kept, damage may occur to the machine.

- Don't use a forklift truck for handling the machine, if you do not have a license for it!
- Don't move under suspended loads! Fault in the lifting device may cause serious injury.
- Keep a safe distance from the machine during transport.
- Temperature of the air must be between **-25°C and 55°C**, for a *short period* (max. 24 hours) up to *70°C*.
- Do not expose the machine to radiation (microwave radiation, ultraviolet radiation, laser radiation, x-ray radiation). Radiation can cause problems with the machine function and deteriorating of the condition of the insulation.
- Take measures, to prevent damage by dampness, by vibrations and by shakes.

2.4.2. Transport and stocking preparations

Close the vice and thoroughly oil all smooth surfaces.

Lower the saw frame to the lowest position.

Make sure to empty the machine of all traces of the cooling agent.

Fasten all loose parts securely to the machine.

Pack and wrap the control desk securely to avoid damage during transport.

Put the stickers stating the minimum approximate machine weight to at least five well visible places.

The machine has to be screwed to a pallet for the transportation. Make sure the pallet is strong enough to be able to hold the saw!

2.4.3. Transport and stocking

The machine must be secured during transportation. Screw the pallet to the floor of the vehicle. Be careful that the machine is not damaged during transportation.. It is forbidden to handle the machine in any way different from that written in these operating instructions, the machine can be damaged.

Store the machine only under conditions mentioned in the manual, to avoid damage of the machine

2.4.4. Transportní schéma / Transport schema / Transport schneme

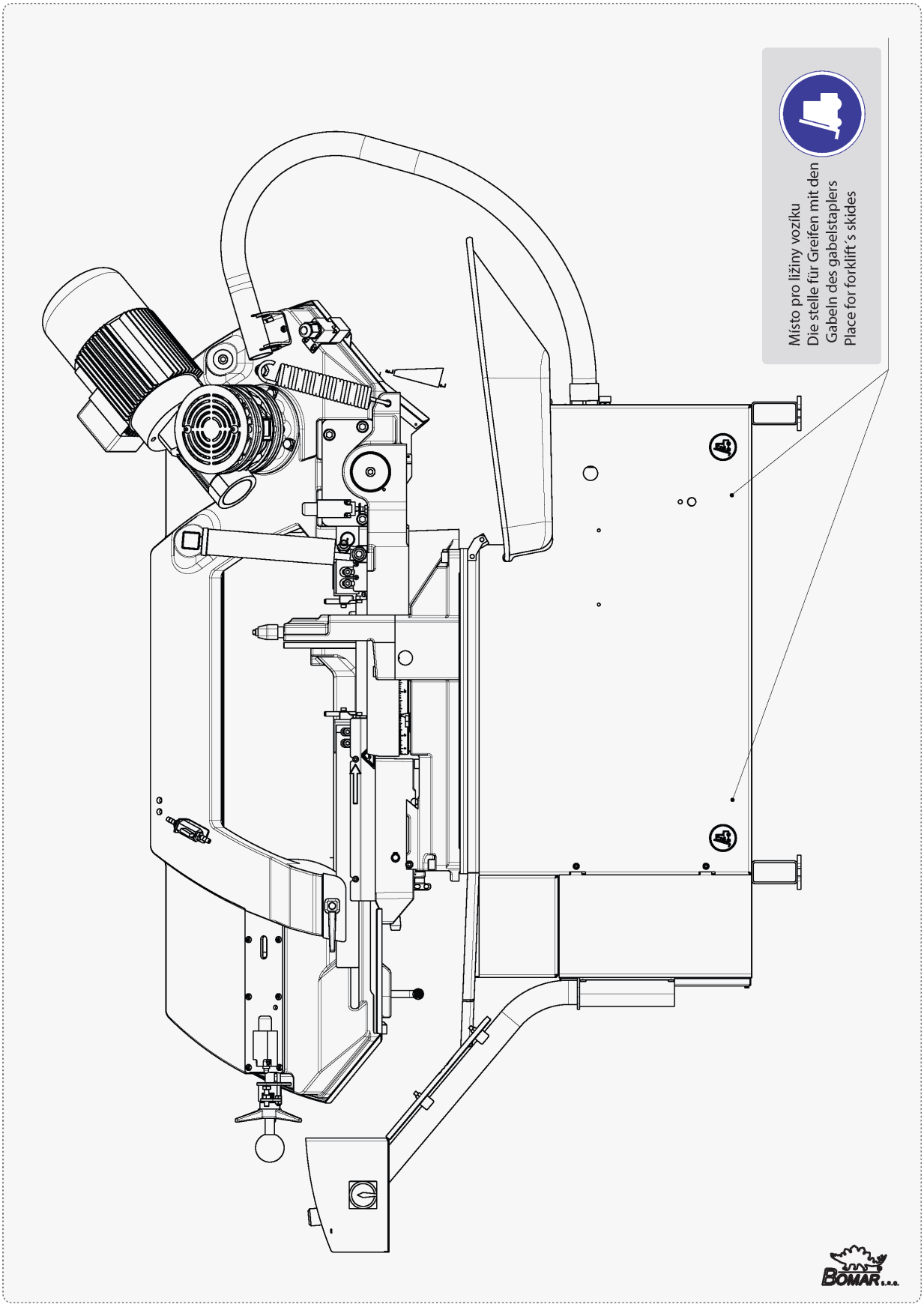

2.5. Activation

2.5.1. Machine working conditions

Keep the conditions of the manufacturer for machine operation! If the recommendations are not kept, damage can occur to the machine.

The manufacturer warrants the correct function of the machine for these conditions:

- At air temperature from ***10°C to 40°C***; the temperature average during 24 hours must ***not exceed over 35°C***.
- At relative dampness of the air in the interval from 30% to 95% (not condensing). Altitude up to 1000 meters.
- Do not expose the machine to any radiation (microwave radiation, ultra-violet radiation, laser radiation, x-ray radiation). Radiation can cause problems with the machine function and deteriorate the condition of the insulation.

2.6. Band saw unpacking and assembling

Remove the wrapping from the machine and unpack all parts.

Attention!
Switch off the main switch and lock it in position, before you start the assembly! Otherwise, there is a possibility of an accidental machine start.

Now put all enclosed parts to place.

2.6.1. Installation of the length stop for the material length setting

1. Slide the length stop into the hole on the side of the vice.

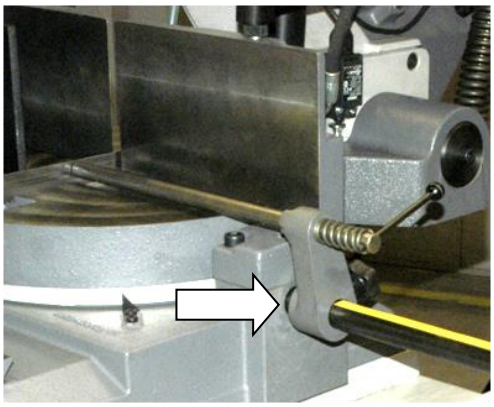

2. Move the length stop up to the saw band.

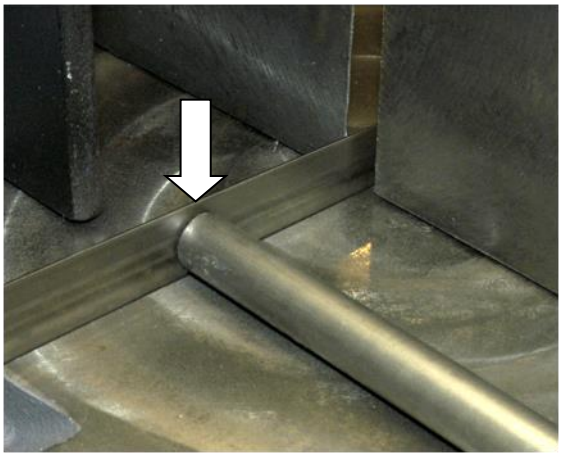

3. Set the measuring unit to zero value.

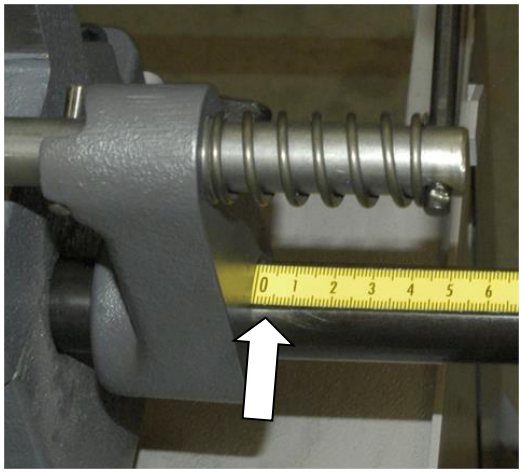

4. Set the measuring unit to zero value.

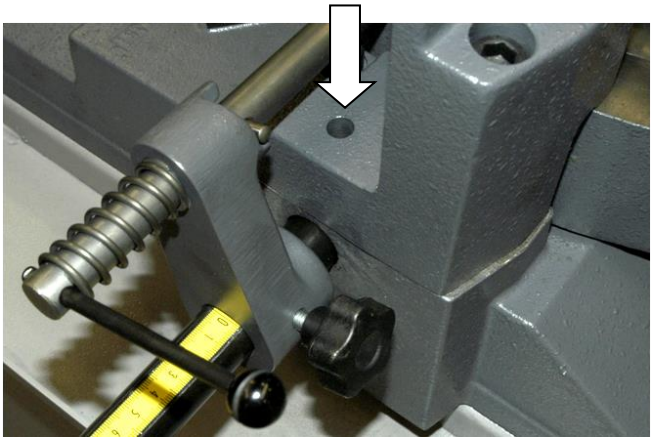

2.6.2. Attachment of the cooling liquid tub

1. Put the tub for the dripping off of the coolant on the pedestal from the back side of the saw

2. Attach the hose for the coolant removal to the outlet of the tub and put its other and immerse its other end into the coolant tank.

2.6.3. Assembly of the hand wheel

Remove the nut from the handle of the hand wheel, place it into the hex opening on the back side of the wheel and fasten the handle.

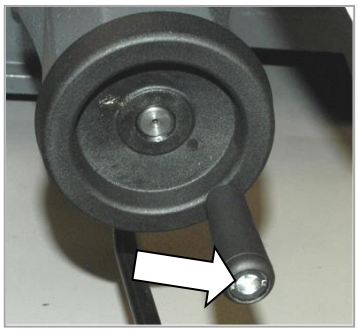

2.6.4. Machine installing and leveling

Check the floor supporting capacity before installing the machine. If the floor capacity does not meet the requirements, you must ready the necessary base for the machine.

Minimal requirement:

machine weight – Ergonomic 320.258 DG – 390 kg

+ weight of the accessories

+ maximum weight of material

- The machine must be leveled in a horizontal position. All feet of the machine must touch the floor after leveling.
- The machine must be leveled by means of a calibrated spirit level. Put the spirit level near the vice. Adjust the roller conveyors according to the spirit level.
- For machine leveling, take care that there is sufficient space available for operation, repair work, servicing of the machine and handling of the material.
- The machine and all appended parts and accessories must be visible from the place of operation.

2.6.5. Kotevní plan / Verankerungsplan / Grounding plan

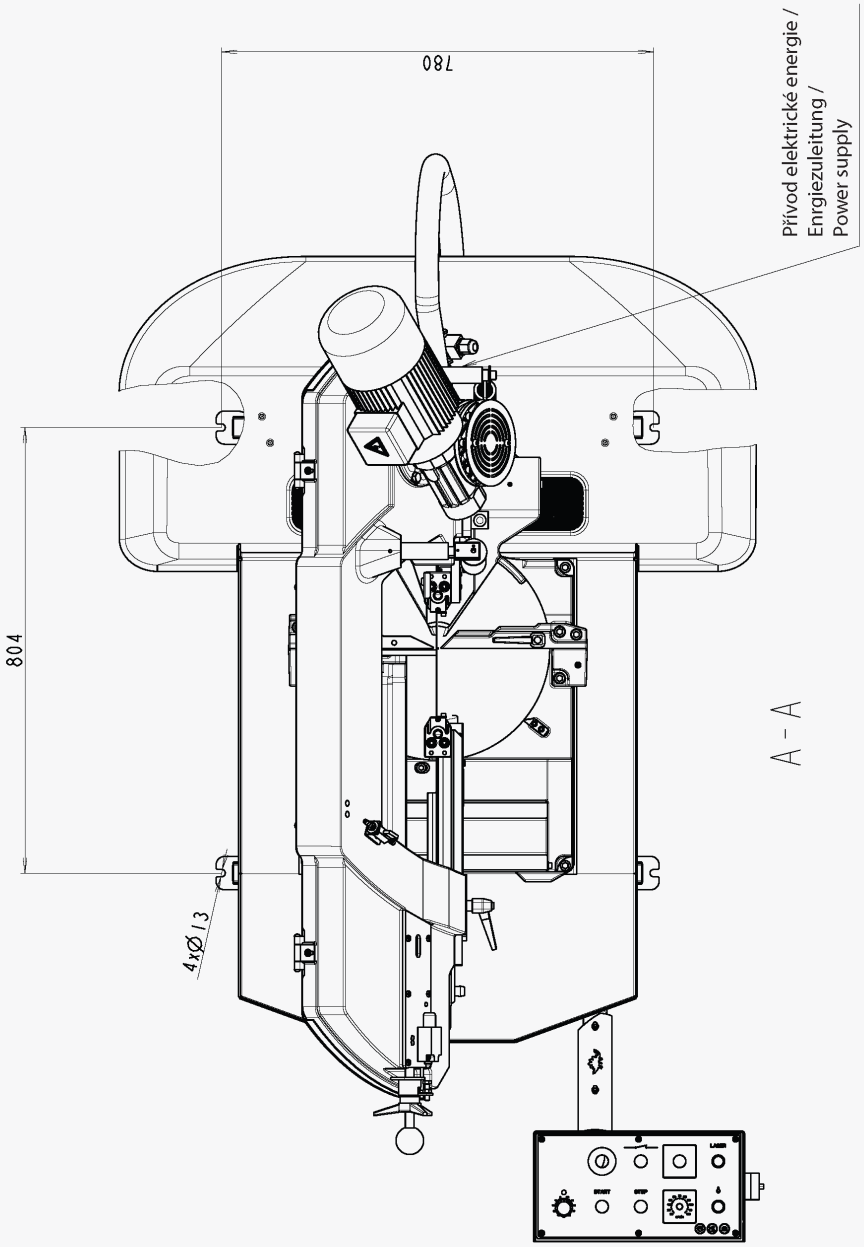

Kotvící materiál / Verankerungsmaterial / Grouding material

- 4× Chemická hmoždina / Chemischer Dübel / Chemical plug – ø12 mm
- Vrtáno do hloubky / In die Tiefe gebohrt / Drilled to – 100 mm
- Šrouby / Schraube / Screws – 4 × M10

Šrouby podložit deskami o min. rozměrech P10×100-100
- Die Schrauben mit Platten mit Minimaldimensionen P10×100-100 unterlegen
Screew must be bottomed with plates (min. dimensions P10×100-100)

Požadavky na rovinnost podlahy / Anforderungen an die Bodenebenheit / Requirements for floor flatness

± 10 mm / 1 m

2.6.6. Electrical connection

Attention!
Only a qualified professional must carry out the servicing and repairs of the electric equipment! *Take special care during work with the electrical equipment. High voltage accident can have fatal consequences! Always follow instructions for work safety.*

Electrical parameters of the machine:

- Service voltage: ~ 3×400/230V, 50/60 Hz, TN-C-S
- Total input / Max. fuse: 1,6 kW / 16 A

Before connecting the machine turn off the main power switch and ensure a dry area for the connection work.

Note:
The values of the cross section of the conductor and the rated current can be found in the regulations.

Service voltage must agree with the line voltage! Cross section of the supply line must respond with the rated current for max. machine load.

Note:
The socket with the fork can be used only for machines with the rated current less than 16 A and total input less than 3 kVA.

The input line is equipped with a 16 A socket for connection of the machine to the electric supply line. In case the machine is connected with a direct connection, an extra main switch which can be locked in zero position must be added.

Attention!
In this case the extra switch becomes the primary switch and the main switch on the machine has only secondary function!

2.6.7. Check the direction of the saw band

After the machine has been successfully connected, switch on the machine and run the driving engine of the band briefly. The movement of the band must be in agreement with the direction of the arrow on the saw band cover. If the direction of the saw band does not agree, the phases at the terminal line must be switched.

2.6.8. Inspection of the connection to the electrical network

Attention!
When you connect the machine to the electrical network insure correct connection of all phases!
THE HYDRAULIC AGGREGATE ENGINE MUST NOT BE OPERATED IN REVERSED MODE FOR MORE THEN 10 SECONDS!!!

2.6.9. Filling of the cooling system

Prepare a mixture of the water and the cooling liquid. Keep to the concentration specified by manufacturer. Remove the cover from the drainage hole. Pour the mixture into the tank of the cooling system.

When filling the tank with the cooling liquid, take care that the liquid does not drip out of the tank and that the tank does not overflow.

When adding anticorrosion agents, antifreeze and other chemicals follow the instructions of the manufacturer! By mixing various products poisonous and aggressive chemicals can be created that can damage your health or the cooling equipment of the machine.

2.7. Machine functions check

Before you start the check study the chapter *Machine control* thoroughly. Do not proceed with the check if you did not fully understand all control elements and machine functions.

Check, if the machine or some parts of the machine were not damaged during transport.

Check, if all covers are installed and functional. Check (with the Tenzomat) if the saw band is correctly stretched. If it is necessary, you can stretch the saw band according to chapter *Selection and replacement of the saw band*. Correct values of the saw band tension are on the Tenzomat.

Switch on the main switch and check the motors and systems (saw band drive, hydraulic pump, cooling pump, chips conveyor).

Open and close the main vice. Turn the saw frame of the band saw from one outer position to the other outer position. Raise the saw frame to the top position and than lower the saw frame to the lowest position.

Start the machine with the cooling pump and let it run without load until the cooling system will be filled with cooling liquid. As soon as the cooling liquid starts to escape from the nozzles of the cooling system, the cooling system is ready for operation. Carry one cycle of cutting without material. Check, if the machine runs with no irregularities. If all machine functions are run properly, the machine is ready for operation.

2.8. Machine disposal after lifetime

Pour all service fluids (cooling liquid, hydraulic oil) from the machine over into designated reservoirs. Dismantle machine into separate parts and dispose of them in accordance with valid directives.

Packaging material Also dispose in accordance with valid directives.

Packaging and machine parts that contain secondary raw materials can be recycled.

2.9. Saw band

Remove the saw band cover only after you have installed and tightened the saw band a bit. This way you minimize the risk of injury.

2.9.1. Saw band size

2910×27(25)×0,90 mm

2.9.2. Selection of the saw band tooth system

The manufacturers provide the saw bands with constant and variable tooth systems. The important factor for selection of the tooth system is the length of the cutting canal with respect to the size of the product.

BOMAR recommends variable tooth system for its band saws.

1. *Constant tooth system* – the saw band has a constant tooth pitch all over its length. This type is suitable for cutting solid materials.
2. *Variable tooth system* – tooth pitch is variable. Variable tooth system is used for profiled materials and bundle cutting. Variable tooth pitch lowers vibration of the saw band, increases service life of the saw band and quality of the cut area.

In the table below the type of the tooth system depending on the sizes and profile of the cutting material is advised.

Footnotes:

Z_pZ – teeth number on one inch S – tooth with zero angle of the teeth K – tooth with positive angle of the teeth

Examples of the tooth system marking:

32 S – number „32" means 32 teeth per inch (constant tooth system), letter „S" marks teeth with zero angle with respect to the band.

4–6 K – number „4–6" means 4 to 6 teeth per inch (variable tooth system); letter „K" marks teeth with positive angle with respect to the band.

2.9.3. Saw band running-in

For reaching a full lifespan of the band we recommend performing a running-in.

Running-in: Perform a cut with the frame lowering speed at 50%. If vibrations occur increase or decrease the band's speed.

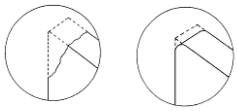

***Note:** Run-in reground saw bands too.*

When cutting small pieces run the band until approximately 300 cm^2 of material has been cut. When cutting large pieces run the band for approximately 15 minutes. When the band has been run, increase the lowering speed of the arm to normal. The running in of the saw band avoids micro chips on the cutting edges of a new saw band ensuing from first excessive stress. This would decrease its lifespan substantially. The optimal running in of the saw band produces ideal rounded cutting edges and therefore the conditions for a maximum lifespan are met.

2.9.4. Tables for teeth selection

SHAPED MATERIAL (D_p, S = mm)

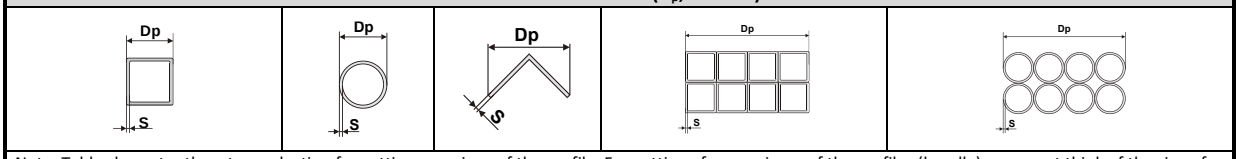

Note: Table shows tooth system selection for cutting one piece of the profile. For cutting of more pieces of the profiles (bundle), you must think of the size of the wall as double size of the wall of one profile (that means, size „S“ equates to 2×S). In table, there are tooth systems constant and variable.

Size of the wall S [mm]	Tooth system (Z_pZ) Outer diameter of the profile D_p [mm]					
	20	40	60	80	100	120
2	32 S	24 S	18 S	18 S	14 S	14 S
3	24 S	18 S	14 S	14 S	10–14 S	10–14 S
4	24 S	14 S	10–14 S	10–14 S	8–12 S	8–12 S
5	18 S	10–14 S	10–14 S	8–12 S	6–10 S	6–10 S
6	18 S	10–14 S	8–12 S	8–12 S	6–10 S	6–10 S
8	14 S	8–12 S	6–10 S	6–10 S	5–8 S	5–8 S
10	-	6–10 S	6–10 S	5–8 S	5–8 S	5–8 S
12	-	6–10 S	5–8 S	5–8 S	4–6 K	4–6 K
15	-	5–8 S	5–8 S	4–6 K	4–6 K	4–6 K
20	-	-	4–6 K	4–6 K	4–6 K	3–4 K
30	-	-	-	3–4 K	3–4 K	3–4 K
50	-	-	-	-	-	3–4 K

Size of the wall S [mm]	Tooth system (Z_pZ) Outer diameter of the profile D_p [mm]					
	150	200	300	500	750	1000
2	10–14 S	10–14 S	8–12 S	6–10 S	5–8 S	5–8 S
3	8–12 S	8–12 S	6–10 S	5–8 S	4–6 K	4–6 K
4	6–10 S	6–10 S	5–8 S	4–6 K	4–6 K	4–6 K
5	6–10 S	5–8 S	4–6 K	4–6 K	4–6 K	3–4 K
6	5–8 S	5–8 S	4–6 K	4–6 K	3–4 K	3–4 K
8	5–8 S	4–6 K	4–6 K	3–4 K	3–4 K	3–4 K
10	4–6 K	4–6 K	4–6 K	3–4 K	3–4 K	2–3 K
12	4–6 K	4–6 K	3–4 K	3–4 K	2–3 K	2–3 K
15	4–6 K	3–4 K	3–4 K	2–3 K	2–3 K	2–3 K
20	3–4 K	3–4 K	2–3 K	2–3 K	2–3 K	2–3 K
30	3–4 K	2–3 K	2–3 K	2–3 K	1,4–2 K	1,4–2 K
50	2–3 K	2–3 K	2–3 K	1,4–2 K	1,4–2 K	1,4–2 K
75	-	2–3 K	1,4–2 K	1,4–2 K	1,4–2 K	0,75–1,25 K
100	-	-	1,4–2 K	0,75–1,25 K	0,75–1,25 K	0,75–1,25 K
150	-	-	-	0,75–1,25 K	0,75–1,25 K	0,75–1,25 K
200	-	-	-	0,75–1,25 K	0,75–1,25 K	0,75–1,25 K

SOLID MATERIAL (D = mm)

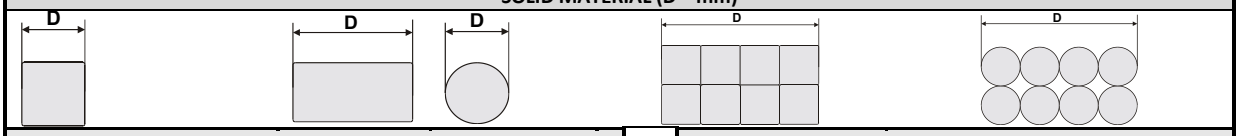

Constant tooth system	
length of the cut D	tooth system (Z_pZ)
to 3 mm	32
to 6 mm	24
to 10 mm	18
to 15 mm	14
15–30 mm	10
30–50 mm	8
50–80 mm	6
80–120 mm	4
120–200 mm	3
200–400 mm	2
300–800 mm	1,25
700–3000 mm	0,75

Variable tooth system	
length of the cut D	tooth system (Z_pZ)
to 30 mm	10 –14
20–50 mm	8–12
25–60 mm	6–10
35–80 mm	5–8
50–100 mm	4–6
70–120 mm	4–5
80–150 mm	3–4
120–350 mm	2–3
250–600 mm	1,4–2
500–3000 mm	0,75–1,25

3. Ovládání stroje / Bedienung der Maschine / Machine control

3.1. Starting the band saw and switching on the safety circuits

» 1. Turn the main switch into position 1 –ON.
The main switch is located on the side of the control panel

2. Switch on the Safety circuit of the saw. The safety circuit will run a check on all safety switches.

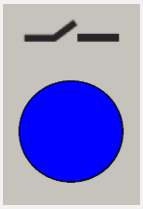

3.2. Control elements

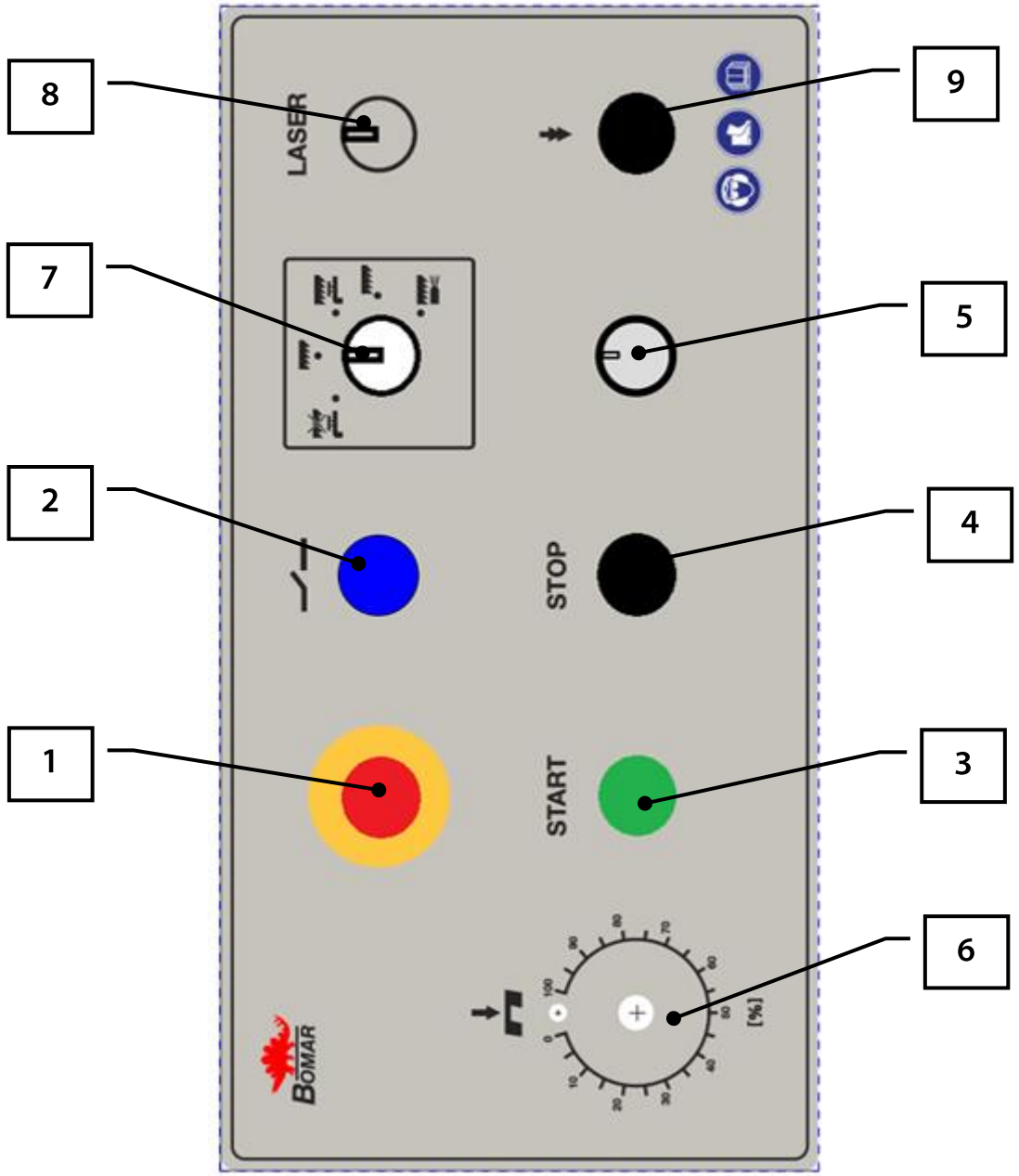

1	**Emergency Stop Switch** Immediately stops the machine in a case of emergency.
2	**Safety circuit** Press button to turn on the safety circuit
3	**START** Starts the drive of the saw band..
4	**STOP** Stops the drive of the saw band
5	**Ergonomic 320.258 DG with a frequency converter** **Frequency converter – setting of the cutting speed** Serves to set the speed of the saw band during cutting with the possibility of the frequency converter (**20** to **120** m. min^{-1}).
6	**Regulation valve** The regulation valve sets the speed of the descent of the saw arm into the cut. The speed is limited by the setup of the pressure into the cut on the guiding cubes. **Note:** If the throttle valve is tightened too much when being closed, the valve seat can be worn out, which will cause leakage. Always tighten the valve gently.
7	**Setting of the cooling mode of the saw band** By turning the knob into the corresponding position the required cooling mode is set. See chapter regarding the setting of the cooling mode
8	**Laserliner – optional equipment** Laser beam switch
9	**Rapid shift – optional equipment** The rapid shift allows a faster descent of the arm into the cut than the maximum speed of descent reached with the hydraulic regulation. For acceleration of descent of the arm into the cut press the rapid shift button.

3.3. Machine control

3.3.1. Cutting

1. Open the main vice of the band saw.
2. Set the length stop to the desired length of the material.
3. Set the desired cutting angle.
4. Insert the material and push it to the length stop.
5. Move the vice jaw to about 5 mm from the material

For a longer distance movement of the vice jaw use the rapid shift option:

a) loosen the arresting lever of the moveable jaw of the main vice

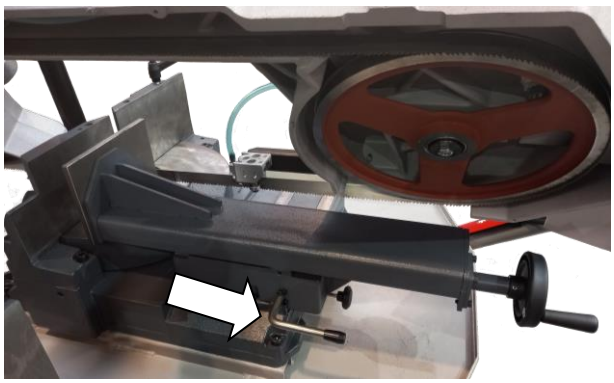

b) move the jaw to the required distance

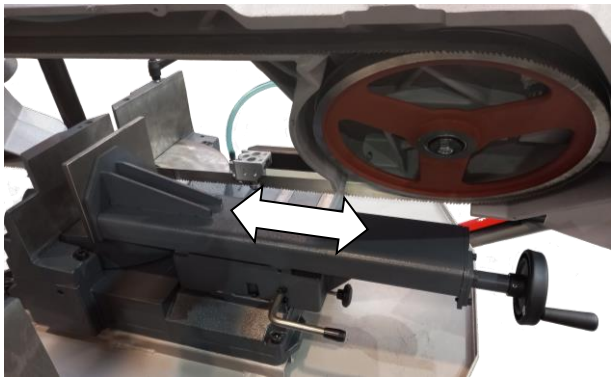

c) tighten the arresting lever

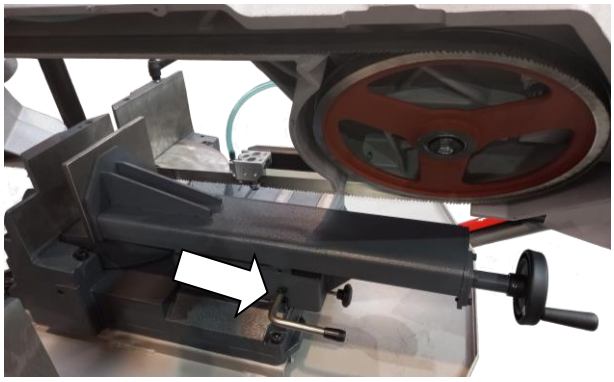

For shifting the jaw for a shorter distance use the hand wheel.

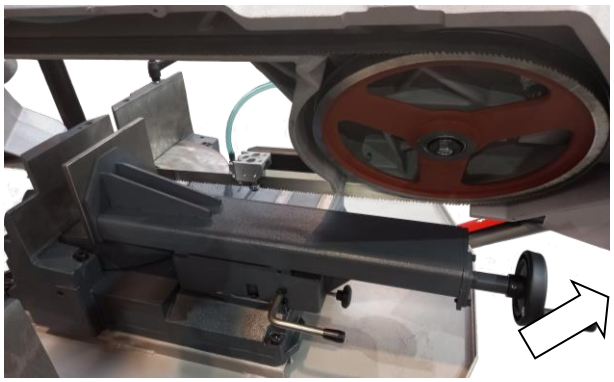

Note:
It is possible to stop the saw band drive by pressing the STOP button or in a case emergency with the Emergency Stop Switch anytime during the cutting

6. Set the left guiding cube of the saw band as close as possible to the material.
7. Set the saw band speed.
8. Start saw band drive with the **START** button.
9. Set the speed of the saw frame descent.
10. Close the regulation valve of the frame descent and lift the saw frame to the top position after cutting
11. Remove the material. Now you can repeat the whole process.

3.4. Machine settings

3.4.1. Setting of the material length

1. Loosen the clamping screw of the length stop.

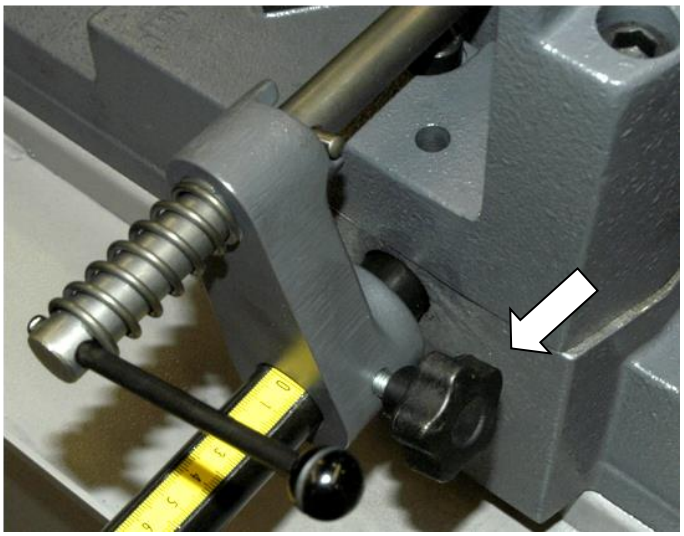

2. Shift the length stop to the required length and tighten the clamping screw.

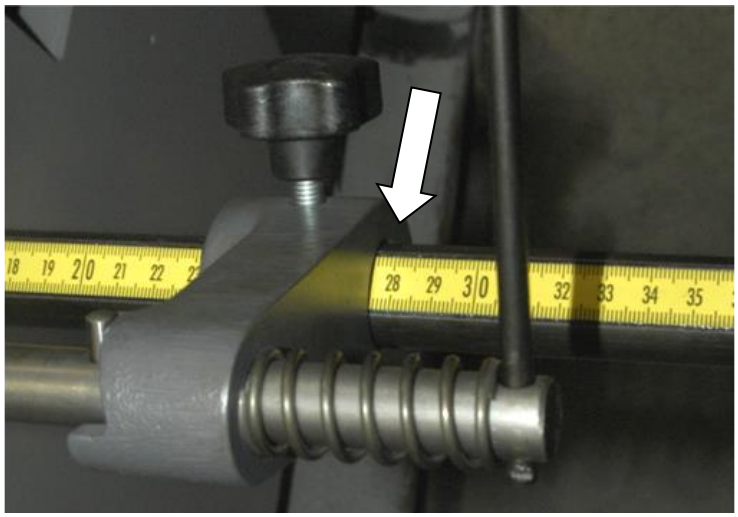

Warning!
The length stop enables a gap between the length stop slat line and the material to avoid clenching the saw band in the cut during cutting. Set the gap of the length stop by turning the lever in the direction of the arrow.

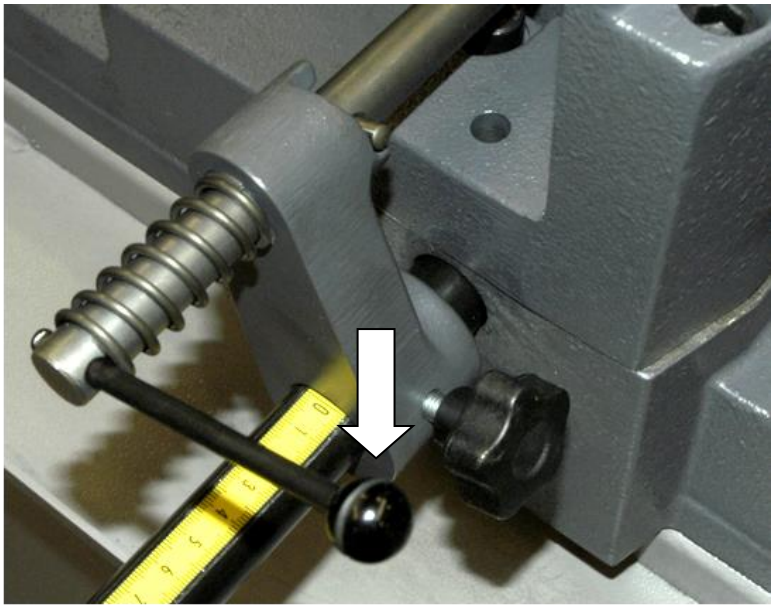

3.4.2. Setting of the cutting angle

The band saw **Ergonomic 320.258 DG** allows cutting under angles from **-45°** to **60°**. For an easier setup of common angles, there are latches on the turning console at every 15° angle increment. Locking in the latches can be felt when turning the saw frame by hand. It is not necessary to loosen the latches for setting a different angle, just turn the saw frame console in the direction required.

Picture	Procedure
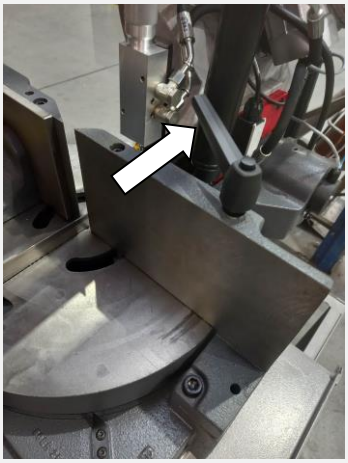	1. Raise the saw frame and loosen the turning console clamping lever.
	2. Set the required angle of the cut according to the scale on the turning console.
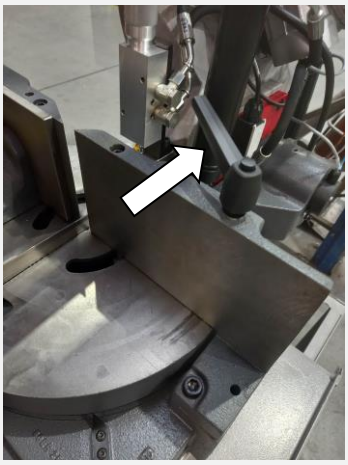	3. Tighten the clamping lever of the console.

Picture	Procedure
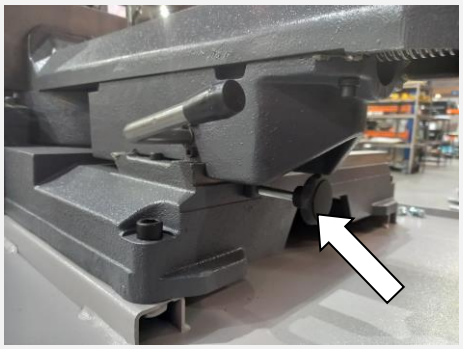	4. Loosen the clamping lever of the vice.
Angle < 0° **Angle ≥ 0°** 	5. Move the vise according to the set cutting angle. For a cutting angle of less than 0° move the vise to the right, for a cutting angle of 0° or more move the vise to the left

3.4.3. Setting of the optimal span of the guiding cubes

For reaching a smooth and accurate cut it is necessary to move the left guiding cube as close to the cut material as possible.

1. Loosen the lever of the left guiding lath and move the left part of the saw band guide so that the edge of the left guiding cube will be as close to the material as possible.
2. Lower the arm into the lower position and check, the position of the guiding cube in respect to the loading surface. The guiding cube should be positioned aprox.10 mm from the loading surface of the vice.
3. Tighten the lever of the guiding lath and check the setting of the guiding cube one more time to avoid collision with the vice jaw or clamping table.

3.4.4. Cutting speed adjustment

Picture	Description
Ergonomic 320.258 DG with freq. Converter	• Change band saw speed by frequency converter in range 20–120 m.min^{-1}.

3.4.5. Speed adjustment of the arm lowering

Set the speed of the arm lowering to the cut by this regulation knob on the control panel (no.6)

- turn clockwise to lower the speed of the descent
- turn counter clockwise to increase the speed of the descent

Warning!
If the throttle valve is tightened too much when being closed, the valve seat can be worn out, which will cause leakage. Always tighten the valve gently

Note

If the regulation valve is fully closed, the arm is fixed in a vertical position.

To allow the arm to move downwards (into cut) it is necessary to release the valve.

3.4.6. Setting the type of cooling

The required type of cooling can be chosen using knob no. 3 o the control panel.

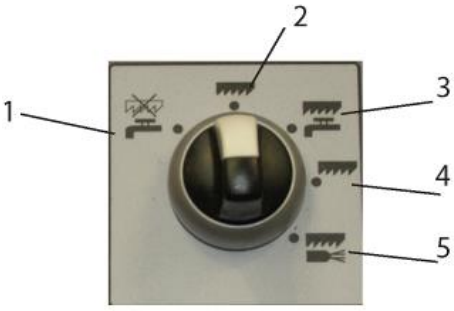

1	The cooling pump runs, even if the pump is turned off (washing)	**Cooling with liquid**
2	The saw band runs without cooling.	
3	The cooling is turned on together with the saw band drive	
4	The saw band runs without cooling.	**Cooling with oil vapor - Microniser (optional equipment)**
5	Cooling is turned on together with the saw band drive.	

3.4.7. Laser-liner for markingthe cut (optional accessories)

The instrument is used to accurately determine the correct cutting position of the material before the cut is made.

The cut is indicated by projecting the laser beam onto the surface of the prepared material.

Adjust the laserliner so that the beam line matches the image.

3.4.8. Device for regulation of clamping pressure (optional accessory)

The hydraulic pressure device is determined for pressure setting on the main vice and feed vise.

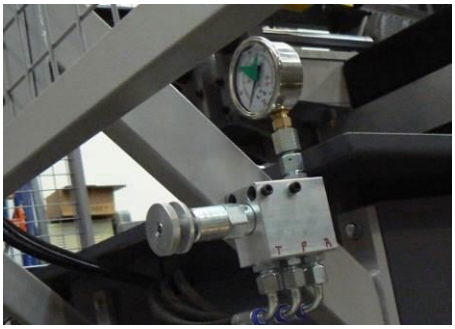

Warning !
*Because the hydraulic pressure equipment pressure **2,2 – 4** MPa, loosen the screws with caution!*

Instruction for adjustment of clamping pressure

1. Release the locknut of the control screw at the pressure valve

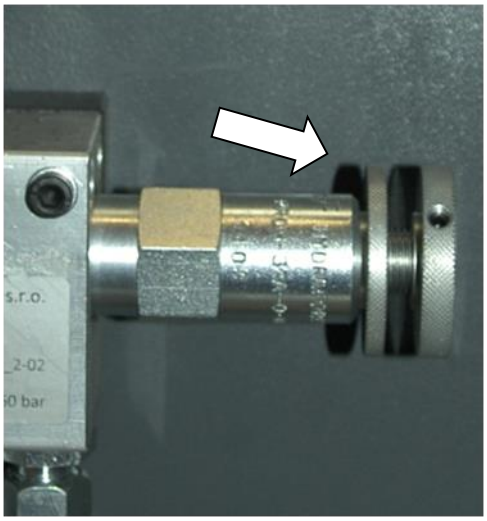

2. Adjust the clamping pressure to the required value using the control screw.

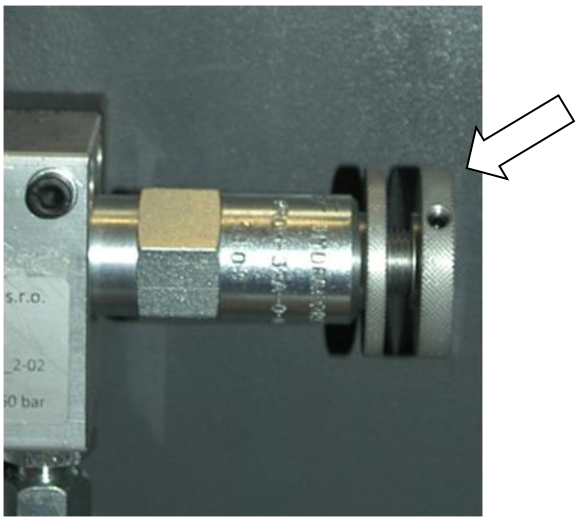

- When turning the pressure valve ***clockwise the pressure increases***.
- When turning the pressure valve ***counterclockwise lowers the pressure***.

The indicator at the manometer at the device for clamping pressure adjustment indicates the set value.

The recommended pressure value is between the values defined through the green arrows at the manometer at the device for controlling of the clamping pressure.

3. Tighten the locknut of the control screw at the pressure valve .

Attention:

It isn´t necessary to adjust the hydraulic pressure of the whole saw in order to adjust the clamping pressure

3.5. Material insertion

- Never walk under a suspended load!
- Never climb onto the-roller conveyor!
- Do not hold the material for clamping in the vice! The vice can cause injuries!

3.5.1. Selecting means of manipulation

- Use the sufficient means to lift and transfer the material!
- Handle the material only with a lift truck or use suspension strands and a crane!
- Do not use the lift truck or crane in case that you do not have the license to operate it!

3.5.2. Insertion

- Insert the material into the vise so that it cannot move or fall out of the vise after clamping. The cut piece must be supported on the jaw at the exit so that it does not get caught between the jaws of the vise
- If you are cutting long pieces of material (e.g. rods, pipes), use roller tracks to feed them to the band saw
- Make sure that the length and width of the roller track is sufficient in relation to the dimensions of the material, and that the load capacity of the track is sufficient in relation to the weight of the material!
- For round material, make sure that it is supported by at least two vertical rollers and cannot fall off the roller conveyor!

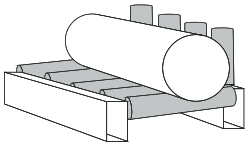

3.5.3. Bundle material cutting

If you want to cut the material in bundles, it is suggested to load the material in the following way.

Round material bundle: For round material take care that the bars are put according to the picture. If the bars are put differently, they might slide during handling.

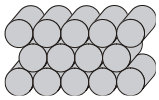

It is recommended to always weld the material at the rear end of the bundle to secure it from moving. Before welding always, switch the machine off with the main switch! The magnetic fields, which occur during welding, may damage the controls!

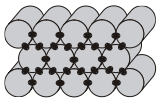

3.5.4. Hydraulic material bundle clamp (optional accessories)

For better retention of the material to be cut in the vise, we recommend the **use of a hydraulic material bundle clamp (auxiliary vise),** which is not a standard part of the machine, only an optional accessory (removable) It is particularly suitable in case of unevenness

Attention!

If the upper clamping cylinder is not positioned correctly, there is a risk of collision with the arm. Always check that the arm and the upper clamping roller do not collide before starting to cut.

The tangential surface of the upper clamping cylinder should not be more than 115mm from the fixed jaw surface of the vise.

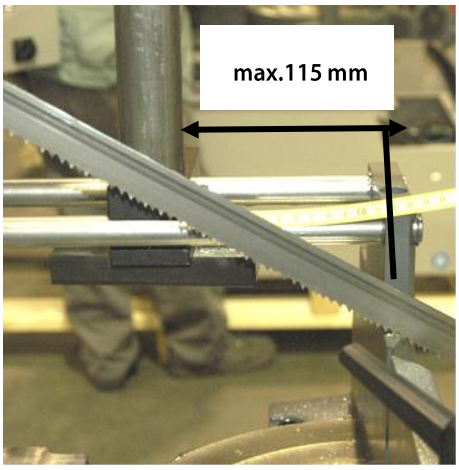

Attention!

If material with a smaller width than the width of the beam jaw is inserted, the beam jaw will be clamped by the vise, not the material.

There is a risk of the material being ejected during cutting!

Attention!

If a top clamp is installed on the machine, it is necessary to open the vise and remove the top clamp base with the top clamp roller before removing the belt. Leave the hydraulic circuit connected.

4. Údržba stroje / Wartung / Machine service

4.1. Saw band dismantling

1. Lift the arm to its uppermost position and lock the arm in position with the regulation valve.

2. Remove the yellow safety covers of the band. The covers are tightened with screws.

3. Open the back cover of the arm. It is mounted with two plastic head screws.

4. Loosen the holder of the brush and turn it away from the band so it does not hinder the dismantling of the band.

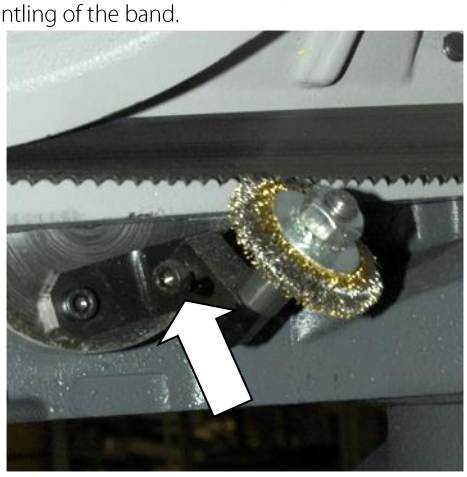

5. By turning the tightening star to the left loosen the stretching of the band.

6. Pull the saw band from the wheels.

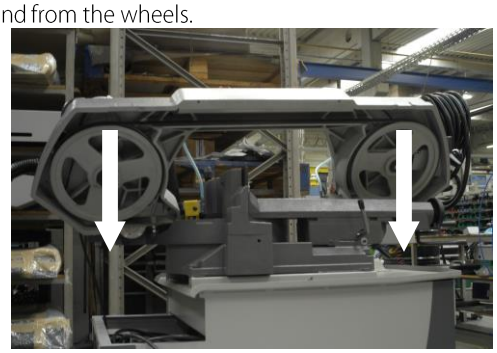

7. After that pull out the band carefully from the guiding cubes.

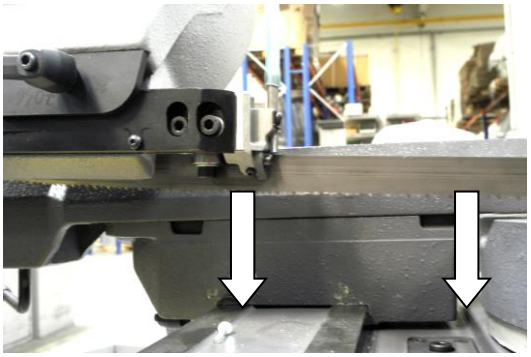

4.2. Saw band installation

1. Prior to installation, clean the track wheels, guiding cubes and inner side of the arm thoroughly of all traces of chips and dirt. ***Keep in mind the teeth direction when installing the saw band***.

2. Insert a new saw band in the guide cubes. Make sure the saw band runs between both guiding rollers and that it is pushed all the way to the top.

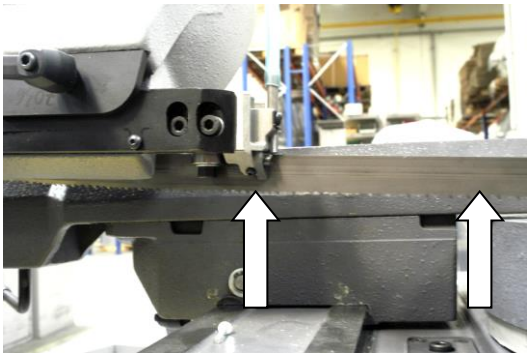

3. Put the saw band on both guiding wheels. Make sure that the saw band ridge fits tightly to the wheel rim. Push the saw band as close to the rim as possible..

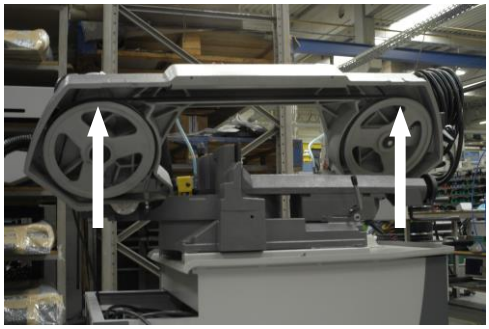

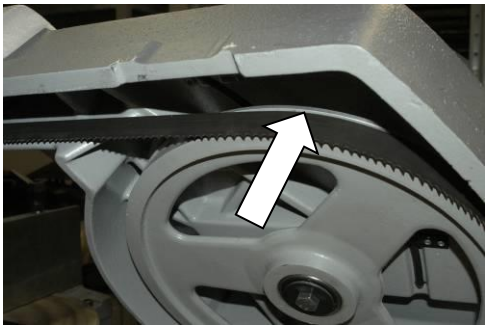

4. Turn the tightening star to the right until you gently stretch the band. Now you can remove the plastic cover on the saw band.

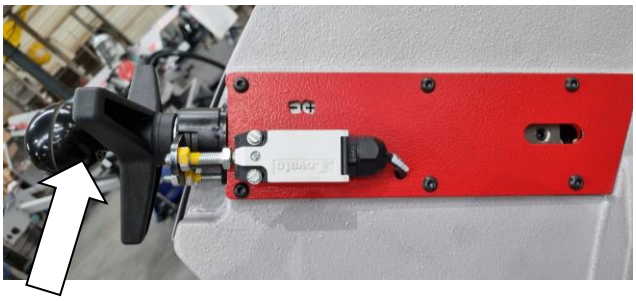

5. Adjust the brush to the saw band and tighten the holder screws.

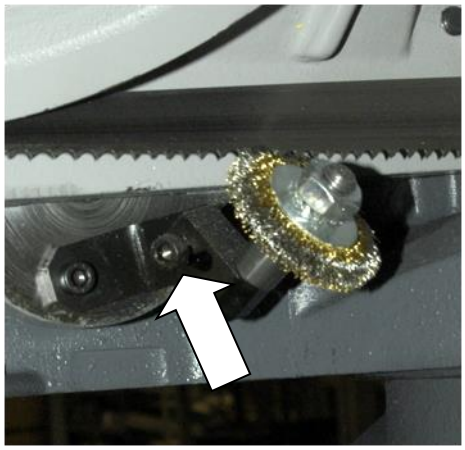

6. Close the back cover and secure it with two plastic head screws.

7. Mount the yellow safety covers of the band.

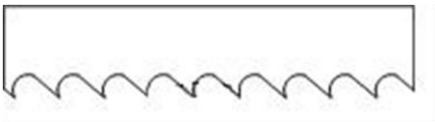

Arrow on the cover must agree with the direction of the teeth. If it does not, you have to flip the saw band.

4.3. Saw band stretching and inspection

Correct saw band stretching is one of the most important factors, which influences accuracy and saw band lifespan. Stretch the saw bands according to the band saw and the selected saw band type. Keep to the recommendation of your manufacturer.

Pilový pás Sägeband Saw band	Napětí pilového pásu Sägebandspannung Blade tension	Napětí pilového pásu PSI (pro Tenzomat) Sägebandspannung PSI (für Tenzomat) Blade tension PSI (for Tenzomat)
20 x 0,9 mm	160 $N.mm^{-2}$	23 500
27 x 0,9 mm	180 $N.mm^{-2}$	26 500
34 x 1,1 mm	210 $N.mm^{-2}$	30 500
41 x 1,3 mm	240 $N.mm^{-2}$	35 000
54 x 1,3 mm	240 $N.mm^{-2}$	35 000
54 x 1,6 mm	280 $N.mm^{-2}$	40 600
67 x 1,6 mm	290 $N.mm^{-2}$	42 000
80 x 1,6 mm	300 $N.mm^{-2}$	43 500

4.3.1. Saw band stretching

1. After installation of the saw band stretch it gently, so it does not fall of the wheels.
2. Mount the Tenzomat on the saw band and secure it with screws.
3. Stretch the saw band until it is stretched to the recommended value.

For a quick control of the tension of the band there is an indicator near the tightening star. If the indicator agrees with the picture bellow, the band is stretched correctly.

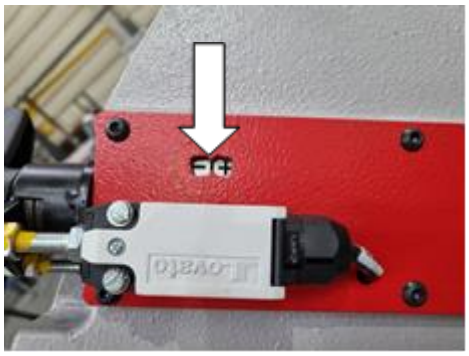

4.3.2. Tensomat (optional accessories)

The Tensomat is used to check the tension of the saw blade.

The principle of the Tensomat is based on measuring the stretching of the saw blade during tensioning.

Using:

1. Place the saw band on the saw wheels and pull it slightly
2. Loosen the clamping screws of the Tensomat. Place the Tensomat on the saw blade, with the saw blade running through the clamps. Make sure that the saw blade does not sit all the way to the bottom of the cutout in the clamps. A gap of 1÷3 mm should be maintained between the saw band and the bottom of the clamps. Tighten the clamping screws of the Tensomat.

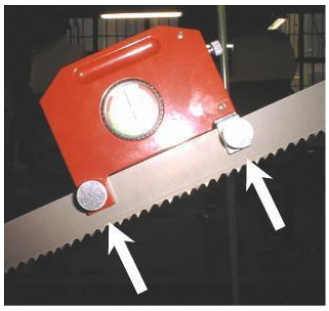

3. Turn the adjustment screw on the moving jaw of the Tensomat to adjust the deflection gauge so that its needle points to zero. Tension the saw blade with the saw tensioner until the deflection gauge shows a value that is within the recommended range.

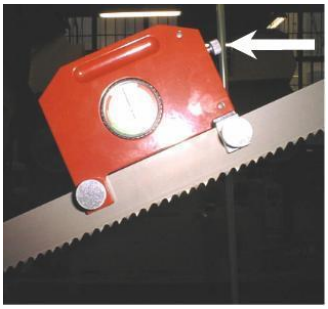

4. Loosen the Tensomat clamping screws and remove the Tensomat from the saw blade.

Pilové pásy se napínají dle typu stroje a zvoleného pilového pásu. Proto doporučujeme, abyste dodržovali pokyny výrobce.

The saw blades are tensioned according to the type of machine and the selected saw blade. We therefore recommend that you follow the manufacturer's instructions.

4.3.3. Saw band inspection

If the band does not run correctly, following problems can appear:

- The band falls down from the wheels – the band or the protective cover of the band can be damaged.
- The band runs on the rim of the stretching wheel – the band or the rim of the wheel can be damaged.

1. Switch on briefly the saw band drive and then switch it off
2. Disconnect the saw from the electrical network.
3. Open cover of the wheels and check the position of the saw band on the both wheels.

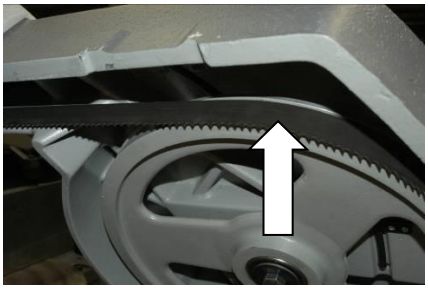

- If the distance between backside of the saw band and the wheel rim is **1 mm**, the setting is right.
- If the distance is bigger than **1 mm**, or the saw band runs on the rim of the wheel, adjust the saw band.

  Close cover of the saw band.

4.4. Adjustment

4.4.1. Saw band run adjustment

The saw band run is set with screw in the stretching cube on the saw frame. Optimal distance has been determined at **1mm**

- Turn the screw to the right, the saw band closes to the stretching wheel rim
- Turn by screw to the left, the saw band departs from the stretching wheel rim

After setting check the saw band run again.

4.4.2. Hard metal guides adjustment on the machine

Hard metal guides adjustment is one of the most important criterions which influence cutting accuracy and saw band lifespan. Therefore it is essential to check that the adjustment of the hard metal guides is correct

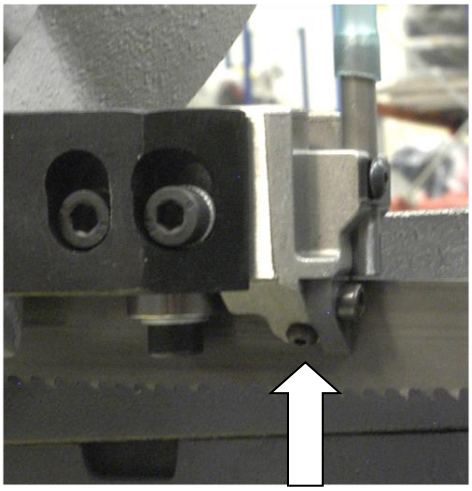

1. Tighten the screw on the side of guide cube so that the band is loosened
2. Loosen the screw slowly and let the hard metal plate touch the band. You must be able to turn the screw by hand. Set the hard metal guiding on the right cube in the same way.

Make sure that the hard metal guides do not put up to much resistance otherwise the lifetime of the saw band and drive decreases.

4.4.3. Guide cube adjustment

Cutting quality and saw band life is also dependent on guide cubes adjustment

Therefore this adjustment has to be checked periodically

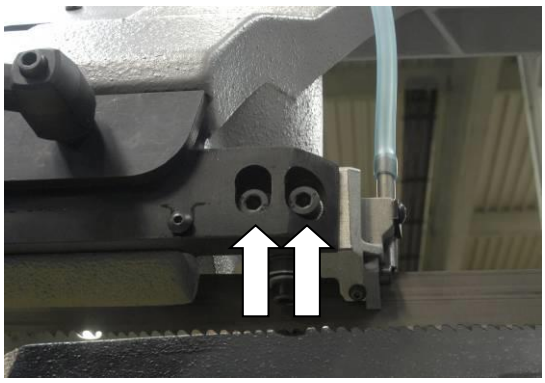

1. Loosen both mounting screws on the guide cubes and push it carefully to the band. Make sure the saw band is not bent; otherwise the cube will press against the band and damage it
2. Fasten both tightening screws again

Notice:
If the guide cube is correctly adjusted, the upper edge of the cube and the ruler are parallel.

4.4.4. Brush adjustment

The brush has essential influence on cutting performance, saw band lifetime, lifetime of the wheels and hard metal guides and cutting accuracy. Therefore the brush has to be checked every shift.

1. Release the tightening screw of the brush so that it is possible to move the brush.

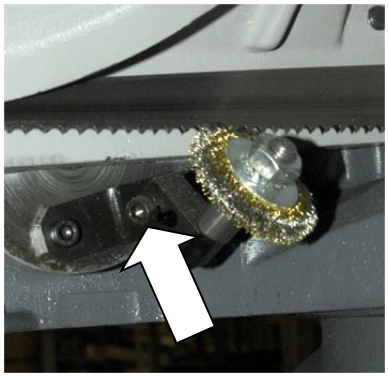

2. Adjust the brush to the saw band. **Its ends must not reach the saw band teeth bottoms.**

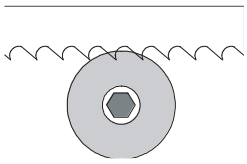

3. Tighten the screw again and turn on the band driver. If the chip removing brush is correctly fastened the brush turns smoothly with the saw band.

> ***Attentionr!***
> *Do not tighten the screw with brute force!*

4.4.5. Halogen lighting of working area (optional accessory)

Light the working area of the machine with natural light and helps to facilitate cutting with a band saw.

Proper lighting in your work area greatly enhances ergonomics machines

Thanks flexible arm halogen light can accurately adjust to the desired location.

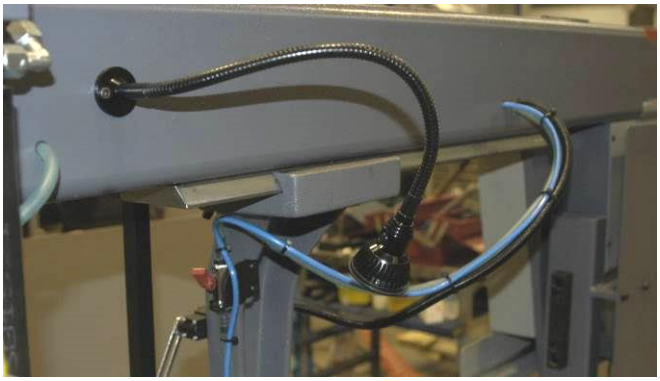

Turn on and off light switch is made directly to the halogen light.

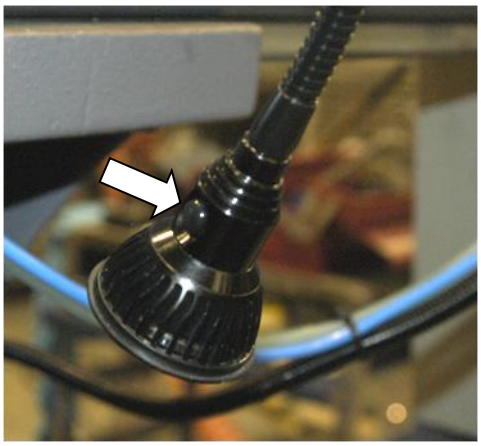

Design lighting unit meets IP54 - Protection against water jets.

Technical data halogen light :

Supply voltage	230 V
Lenght flexible arm	300 mm
average	Ø 5,5 mm
lenght	80 mm

Package includes: lighting unit, flexible arm, holder for attachment to the machine, transformer, wiring.

4.4.6. Adjusting the limit switch of the saw band stretching

After the saw band is replaced, the limit switch setting must be checked. If the limit switch is not set correctly, the band is stretched either too much or too little.

1. Stretch the band with help of the TENZOMAT to an optimal value (Tenzomat chart)
2. Release the nut on the stop screw
3. Start the band drive. Two scenarios may occur:
   a) If the engine is switched on, but it does not run, turn the screw to the left until the engine starts to run
   b) If the engine runs turn the screw to the right until it stops, then turn the screw shortly to the left until the engine starts running again
4. Lock the stop screw using locking nut and check the adjusting of the limit switch again

4.4.7. Saw frame lower position stop adjustment

The lower stop limits the lowest position of the saw frame. This stop has to be checked at least once a month. If the lower stop is adjusted incorrectly, the loading surface of the table can be cut too deeply or the material will not be cut completely

1. Raise the saw frame to the upper position
2. Release the nut of the adjusting screw and adjust the stop
3. Fasten the adjusting screw with the nut again
4. Set the limit switch of the lower arm position

4.4.8. Adjustment of the limit switch of saw frame lower stop

If you have adjusted the lower stop of the saw frame, the limit switch adjustment inspection is required

Setting check

Lower the arm to the lowest position. If the arm lays on the lower stop and the switch reacts, the setting is correct. In other case carry out the switch setting

Switch setting

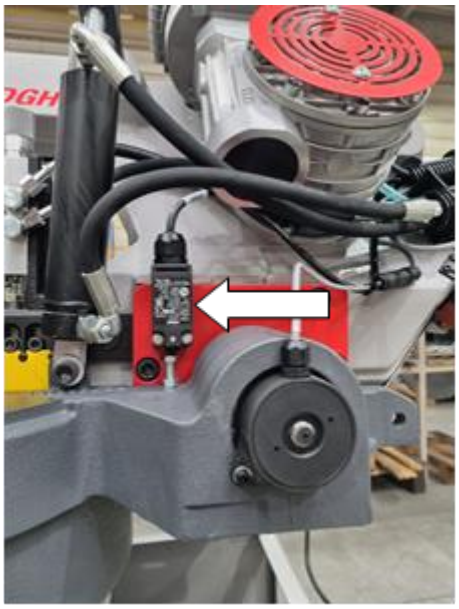

1. Release the nut of the stop screw and screw down the stop screw
2. Lower the arm to the lower stop and turn on the band driver
3. Screw out the stop screw until the band driver stops
4. Secure the screw with nut again and check the limit switch setting once more

4.4.9. Throttle valve adjustment

1. Switch off the machine with the main switch. Allow the saw arm to drop to the lower position. Close the throttle valve gently.

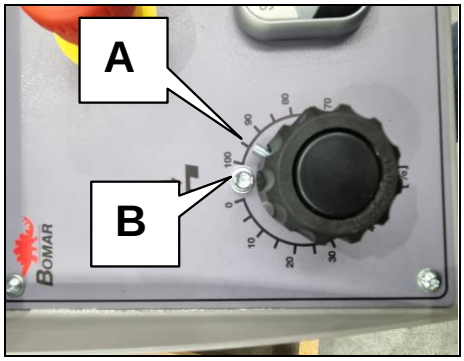

2. The worm (pos.A) must be near the stop screw (pos.B) when the valve is fully closed.
3. Otherwise, loosen the worm with an Allen key, lift the plastic control wheel and tighten the throttle valve to max. Loosen the worm and remove the wheel. Reinstall the wheel so that the worm is at the max throttle stop. Then retighten the worm.
4. Switch on the machine and check the feed control of the saw arm into the cut.

4.5. Cooling agents and chip disposal

The quality of the cooling agent will deteriorate due to:	If the solution is too weak:	If the solution is too strong:
• use of contaminated water • impurities • oil contamination from the outside (hydraulics, gears) • high operating temperatures • lack of air circulation • wrong concentration	• corrosion protection is diminished • lubrication decreases • microbial attack is more likely	• the cooling ability is decreased • foam production increases • emulsions stability deteriorates • sticky residue develops

4.5.1. Coolant inspection

The state of the cooling agent has a significant influence on the cutting quality and on the lifespan of the machine. Lifetime of the cooling liquid is 1 year, after this time we recommend change the cooling liquid. This time is dependent on the degree of pollution of the cooling liquid (especially with oils) and on other factors.

Check level of the cooling liquid and function of the pump periodically!

> ***Note:***
> *If the state of the cooling liquid is not satisfactory, the cooling liquid must be replaced.*

Check the state of the cooling agent according to the following table:

Testing	Interval	Method	Condition	Precaution
Liquid level	daily	visually	too low	check concentration, add water or emulsion
Concentration	daily	refractometer densimeter	too high too low	refill water refill base emulsion
Smell	daily	by sense of smell	unpleasant smell	good ventilation, add biocides or replace coolant

Contamination	daily	by sense of smell	visible oil leaks, sludge fungi	surface cleaning, fix leaks, add biocides or fungicides; clean the system with a cleanser* prior to the coolant replacement
Corrosion-protection	when necessary	visually chip test Herbert-test	insufficient corrosion protection	test stability, if necessary – increase concentration or pH value
Stability	when necessary	refractometer	oiling	add concentrate, enquire the supplier
Foam reaction	when necessary	shaking test	too much foam, foam disperses too slowly	avoid aeration, increase water hardness, fix with defomer

* According to manufacturer's instructions

4.5.2. Cooling liquid preparation

Prepare a mixture of water and cooling liquid. Conform the notes of the manufacturer and keep the manufacturer's-approved concentration

All instructions are stated on the tank of the cooling liquid or in documentation of the cooling liquid. For cooling liquid usage and disposal heed the instructions of the manufacturer.

Fill the mixture of water and cooling liquid to the tank of the cooling system

When filling the tank with the cooling liquid take care that the liquid will not drip out of the tank and the tank does not overflow

Keep to the manufacturer specified recommendations for adding the anticorrosive agents, the antifreeze or other agents! Mixing two chemicals can produce toxic and aggressive substances, which can damage your health or the cooling system of the machine

Note: If the machine is equipped with Microniser (see. **Special accessory**), fill the tank of the Microniser with specified cooling liquid. Then the microniser is ready for the operation

The quality of the cooling agent will deteriorate due to:

- use of contaminated water
- impurities
- outside oil contamination (hydraulics, gears)
- high operating temperatures
- lack of air circulation
- wrong concentration

If the solution is too weak:

- corrosion protection is diminished
- lubrication decreases
- microbial attack is more likely

If the solution is too strong:

- the cooling ability is decreased
- foam behavior increases
- emulsions stability deteriorates
- sticky residue develops

4.5.3. Micronizer MicroBox – mist lubrication 24V (optional accessories)

The placement of a Microniser at the machine is pursuant to this photo

Next photos are for illustrative purposes only.

Microniser and MicroBOX are devices used to create a lubricating oil mist in precise doses of oil and air mixture, which is then applied directly to the saw band.

Micronizer	MicroBox
	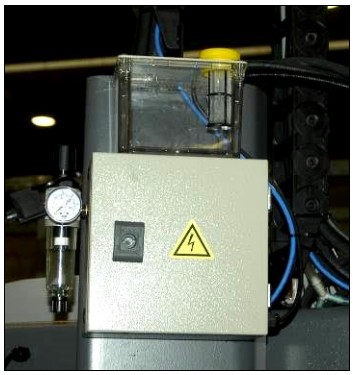

The device serves for ideal cooling and lubrication of the cutting blade when closed profiles are cut, and helps to maximize ease of cut.

There is no leakage of coolant outside the work area of the saw when a profile material is cut.

The device is suitable for all Bomar saws

Microniser setting:

1. For proper function of the Microniser pressured air (in the range of 0.5 to 0.5 MPa (5-6 bar)) must supplied from the pneumatic system (dry, clean, free of particles) see - arrow **1**

Micronizer
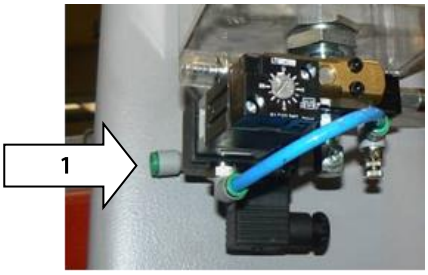

MicroBox

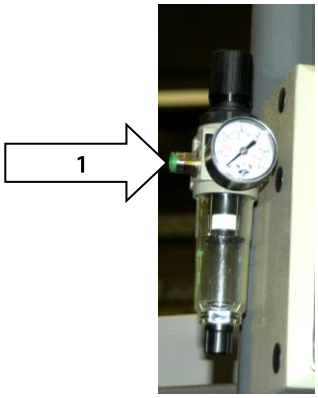

2. Arrow **2** - shows the output of the cooling medium (air + oil).

   Arrow **3** - shows the inlet for the power supply cable.

Micronizer

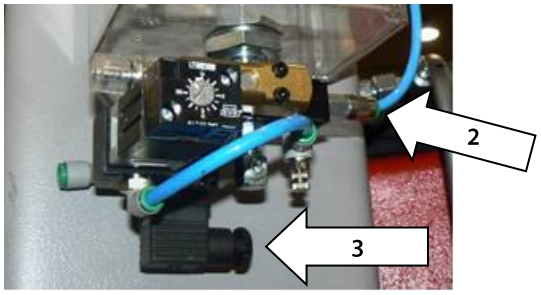

MicroBox

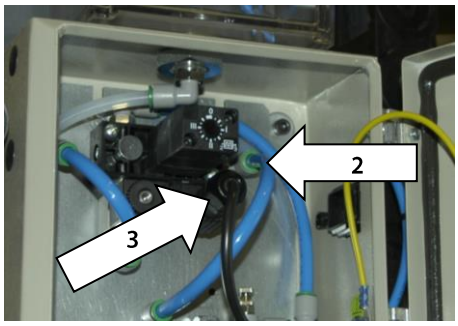

3. Set the interval of cutting oil dispersion on the Microniser- **arrow 4** (3-20 pulses / min.). Adjust this interval to the parameters of the saw band and cut material.

Micronizer

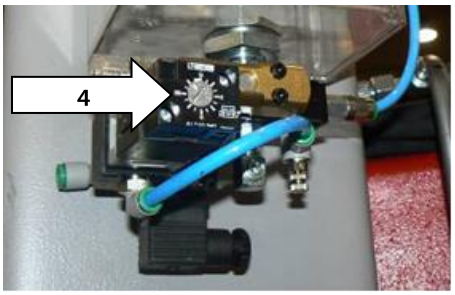

MicroBox

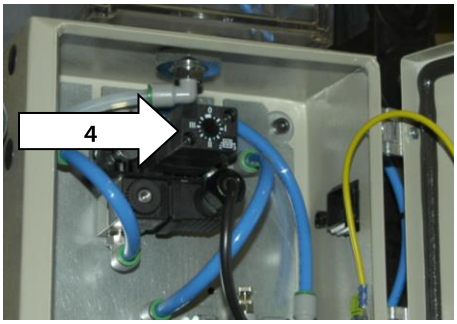

4. Adjust the amount of oil with a regulator - arrow **5**

Micronizer

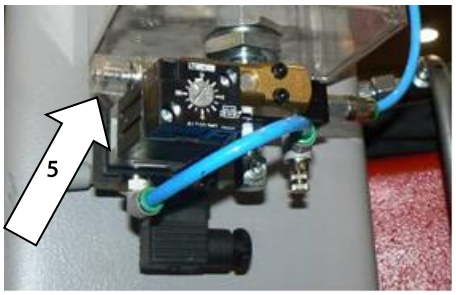

MicroBox

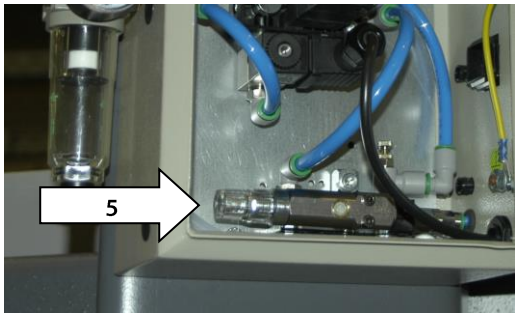

5. Setting the air quantity using another regulator - arrow **6**

Micronizer

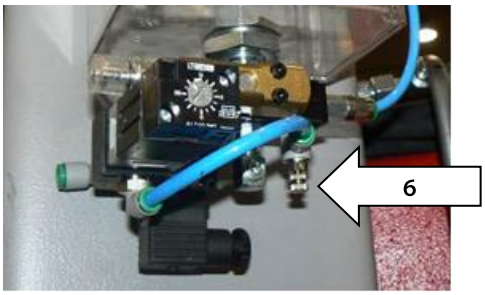

MicroBox

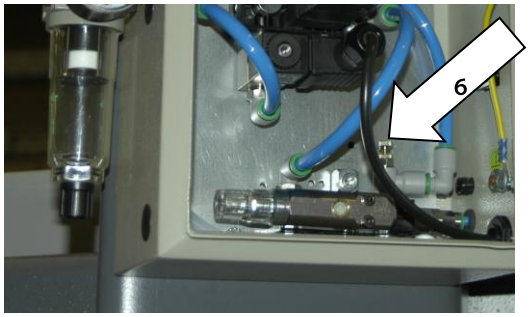

6. Switching on / off of the Microniser is depends on the control system of the machine it is installed on. See chapter "Machine control".

Recommended cutting oils for Micronisation:

Manufacturer	Cutting oil
Biona	Biocut
Paramo	Paramo cut 22

Featured are cutting oils with viscosity class 22.l

Adding of the coolant is possible after removing the filling cap. After the filing is finished the cap must be screwed in again.

Package Includes: a tank with regulators, connection 6m hose, diffuser.

4.5.4. Halogen lighting of working area (optional accessory)

Light the working area of the machine with natural light and helps to facilitate cutting with a band saw.

Proper lighting in your work area greatly enhances ergonomics machines

Thanks flexible arm halogen light can accurately adjust to the desired location.

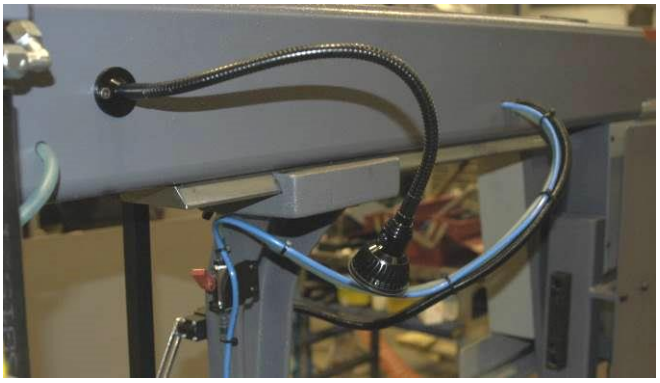

Turn on and off light switch is made directly to the halogen light.

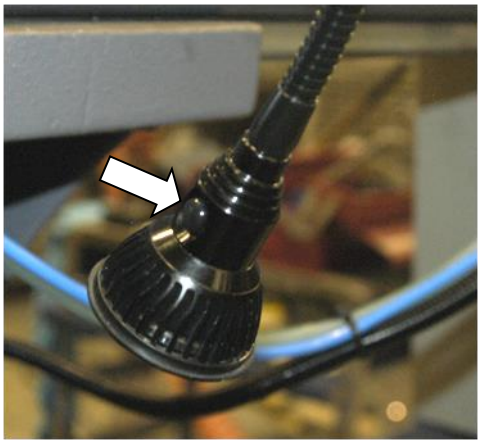

Design lighting unit meets IP54 - Protection against water jets.

Technical data halogen light :

Supply voltage	230 V
Lenght flexible arm	300 mm
average	Ø 5,5 mm
lenght	80 mm

Package includes: lighting unit, flexible arm, holder for attachment to the machine, transformer, wiring.

4.5.5. Third cooling inflow (optional accessory)

Flexible coolant supply allows to bring the coolant to the desired location.

Third, easily routable and adjustable coolant supply with nozzle ensures sufficient lubrication and cooling of the strip in the middle of the cut material

Particularly suitable for cutting materials with a larger average, where the opening of the guide blocks larger blade and prevents proper lubrication and cooling of the entire length of the cut

For normal cutting off the third coolang inflow may be easily disconnected by closure

When adjusting the nozzle, pay increased attention that the inlet hose does not stand in the way of the saw band.

The third coolant inflow get in the package complete package including all jumpers and hoses - just connect to existing cooling divorce

Complete package includes: flexible hose (length 600 mm), shunt valve, inlet plastic hose (depending on the type of machine - min. 1m), interconnection schedule, holderto the machine screws (2xM5), transformer and wiring.

4.6. Chips disposal

Chips resulting from cutting operations must be disposed of in accordance with the relevant regulations.

- Let the chips drip excess fluid!
- Put the chips into a watertight container. Make sure that the container does not leak, because even after a long dripping time, the chips still contain coolant residues.
- *Place the container into the care of a disposal company equipped for the disposal of chips contaminated with cooling liquid.* In case the machine is equipped with micronisation device, the chips must also be handed over to a disposal company.

4.6.1. Tool cleaning machines from chips after cutting. (optional accessory)

The tool can be used for cleaning of a machine from chips which were produced during cutting proces.

As a cleaning liquid is used coolant which spouts from the nozzle of the „gun" when its handle is pushed down.

With custom pump (min. capacity 16 l / min.) The coolant gets into the rinsing pistol with the trigger lever.

Sufficient pressure to the chips and debris were eliminated from the bearing surfaces of the base material and the saw.

Gun cleaning machine from the chip is supplied with a sufficient supply hose for easy handling (diameter of 12/8 mm).

Package includes:.

1. Ergonomic handle allows easy handling of the gun during cleaning machine.

2. Brass adjustable nozzle allows for smooth width rinse stream.

3. Valve for setting maximum coolant flow

4. Also included is a convenient holder for postponement gun after useí

5. Connecting part equipped with a transparent tube with a connecting part for coupling the cleaning pistol to the pump.

6. Transparent inlet hose to couple the pistol to the connecting part.

Suitable for machine brand Bomar

4.7. Gearbox oils and greases

4.7.1. Gearbox oils

In gearboxes, oil is used for the whole lifetime of the gearbox. We recommend replacing of the filling oil in case of repair.

Use oils with DIN 51517 specification for the gearboxes. Select the ISO VG viscosity class according to the original oil.

Attention:
When replacing the oil, use oils recommended by BOMAR or oils from other manufacturers, which have comparable parameters. Do not forget, that mineral and synthetic oils must not be mixed!

Recommended oils and quantity according to the type of the band saw

Band saw	Gearbox oil	Capacity
Ergonomic 320.258 DG	Paramo PP7	2,0 l
Swarf conveyor	Shell Tivela S 320	0,075 l

Comparative table of the gearbox oils

Manufacturer	Viscosity grade		
	ISO VG 100	ISO VG 220	ISO VG 320
BP	Energol GR-XP 100	Energol GR-XP 220	Energol GR-XP 320
Castrol	Alpha SP 100 Alpha MW 100	Alpha SP 220 Alpha MW 220	
Elf	Reductelf SP 100	Reductelf SP 220 Reductelf Synthese 220	Reductelf SP 320
Esso	Spartan EP 100	Spartan EP 220	Spartan EP 320
Mobil	Mobilgear 627	Mobilgear SHC 220 Mobilgear 630	Mobilgear 632
ÖMV		PG 220	
Paramo	PP 7	Paramo CLP 220	Paramo CLP 320
Shell	Shell Omala 100	Shell Omala 220 Shell Tivela S 220	Shell Omala 320 Shell Tivela S 320
Total	Carter EP 100	Carter EP 220	Carter EP 320

4.7.2. Lubrication greases

For lubrication we recommend using lithium based class NGLI-2 saponified grease. Different greases are mixable, if their oil bases and density classes are identical.

Comparative table of the lubricant greases:

Manufacturer	Type of the lubricant grease
BP	Energrease LS - EP
DEA	Paragon EP1
Esso	FETT EGL 3144
	Beacon EP 1
	Beacon EP 2
FINA	FINA LICAL M12
Klüber	Microlube GB0
	Staburags NBU8EP

Manufacturer	Type of the lubricant grease
	Isoflex Spezial
Optimol	Optimol Longtime PD 0, PD1, PD2
Shell Aseol AG	ASEOL Litea EP 806-077
Texaco	Multifak EP1

4.7.3. Lubrication

There are several assemblies on the machine,that have to be lubricated to ensure the correct function of the machine.

Place for lubrication	Description
	The upper pivot of the lifting cylinder – drip oil once a week.

4.7.4. Hydraulic oils

Replace the hydraulic oil once every 2 years, because the oil properties can deteriorate and cause problems with the hydraulic equipment. If the hydraulic system is equipped with filter (2SF 56/48-0,063), replace the filter too.

Use oils with specification DIN 51524-HLP, ISO 6743-4 and viscosity class ISO VG 32 in hydraulic aggregates. Hydraulic oils quantity – see chapter Hydraulic oil level check.

Note:
When replacing the oil, use oils recommended by BOMAR or oils, from other manufacturers which have comparable parameters. Do not forget, that mineral and synthetic oils must not be mixed!

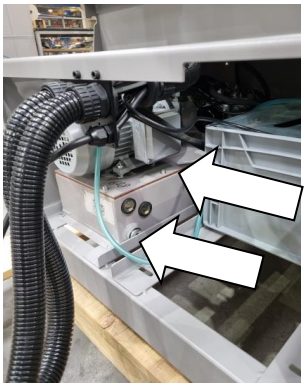

Comparative table of the hydraulic oils:

Manufacturer	Type	Manufacturer	Type
Agip	Oso 32	Ina	Hidraol 32 HD
Aral	Vitam GF 32	Klüber	Lamora HLP 32
Avia	Avilub RSL 32	Hungary	Hidrokomol P 32
Benzina	OH-HM 32	Mobil	Mobil DTE 25
BP	Energol HLP 32	ÖMV	HLP 32
Bulgaria	MX-M/32	Poland	Hydrol 30
Castrol	Hyspin AWS 32	Rumania	H 32 EP
Čepro	Mogul HM 32	Russia	IGP 30
DEA	Astron HLP 4hy6	Shell	Tellus Oil 32
Elf	Elfolna 32	Sun	Sunvis 846 WR
Esso	Nuto H 32	Texaco	Rando HD B 32
Fam	HD 5040	Valvoline	Ultramax AW 32
Fina	Hydran 32		

4.7.5. Maintenance of hydraulics

After fifty hours of operation, and no later than three months after commissioning, the first maintenance should be carried out as a preventive measure. This maintenance includes:

- - checking the tightness and tightening of all components and connecting elements (valves, fittings, pipes, hoses, etc.)
- - checking the oil level

The oil level must be between the halves of both oil gauges.

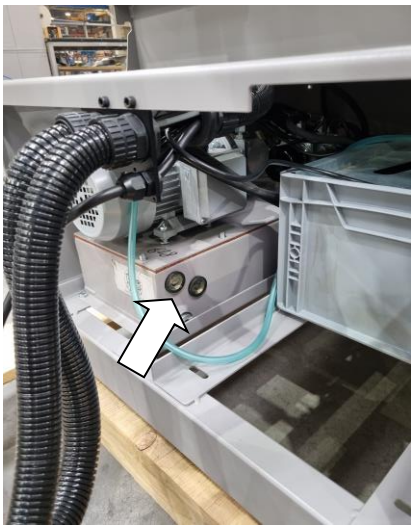

- - check the oil temperature - the temperature should not exceed 70°C
- - checking the function of the signalling elements (thermometer, level gauge, filter clogging indication)
- - checking the working pressure setting

To realise a high reliability of the power pack, the manufacturer lays down following inspection intervals

Interval	daily	weekly	monthly	three monthly	six monthly	annually
Hydraulic fluid						
Level	-	•	-	-	-	-
Temperature	-	•	-	-	-	-
Condition	-	-	•	-	-	-
Change interval	-	-	-	-	-	•
Filter						
Change interval	-	-	-	-	-	-
Other checks						
External Leakages	•	-	-	-	-	-
Contamination	•	-	-	-	-	-
Damages	•	•	-	-	-	-
Noise-(level)	•	-	-	-	-	-
Gauges	-	-	•	-	-	-

4.8. Machine cleaning

Clean the machine off cooling agent and impurities after every shift. Conserve the guiding surfaces, mainly.

- Guiding of the clamping jaws of the main and feeder vice.
- Guiding of the feeder.
- The loading surface of the main and feeder vice
- Thread rod of the main and feeder vice

4.9. Worn pieces replacement

4.9.1. Hard metal guides replacement

If the hard metal guides cannot be adjusted, they have to be replaced.

1. Remove the cooling agent hosepipe and dismantle the saw band and saw band guiding cube.

2. Fasten the guiding cube in a vice.

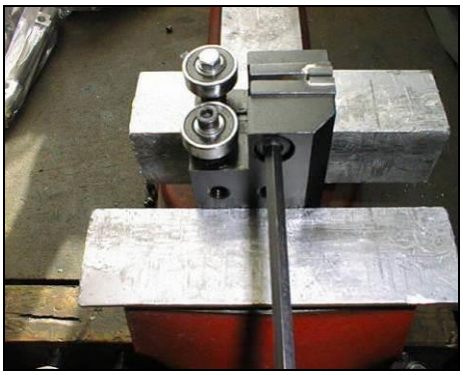

3. Loosen the mounting screws using a hex key

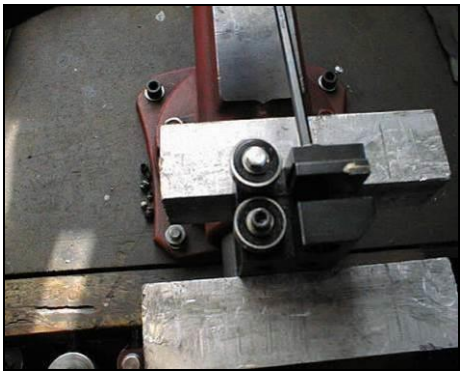

4. Unscrew the frontal screws, which hold the hard metal guides.
5. Now insert new hard metal guides and fasten them tightly and mount the guiding cube to the guiding lath.
6. Install the saw band and adjust guiding cube and hard metal guides.

Attention:
The vice has to have aluminium jaws or an aluminium insert to protect the pivot from damage.

4.9.2. Saw band guiding rollers replacement

If the saw band is not sufficiently guided by guiding rollers and/or if the rollers are visibly worn, they should be replaced.

Attention! Guiding rollers must be replaced together on both guide cubes!

1. Remove the cooling agent hosepipe and dismantle the saw band and guiding cube.

2. Grip the guide cube in a vice and screw out both fastening screws of the eccentrics.

3. Pull both guiding rollers from the eccentrics.

4. Put new guiding rollers on the eccentrics and mount the eccentrics to the guide cube

5. Now insert a test piece of saw band (cca 15 - 20 cm) into the guide cube. Adjust both eccentrics so that the band runs in the middle of the milled groove. This groove is located between both eccentrics. Guide rollers may not press too much against the band but spin freely

Optimal distance between the band and guiding roller is 0,05 mm.

6. Adjust the hard metal guides accordingly for the band to be able to move freely between them. Tighten the frontal screws of the hard metal guides, then tighten the mounting screws.

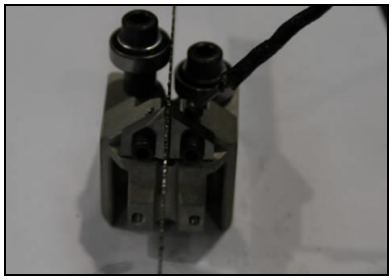

7. Now it is necessary to tighten the screws band guiding rollers.

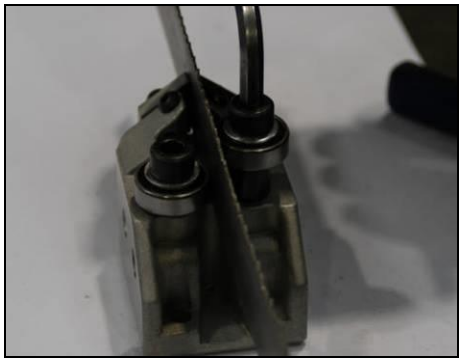

8. Install the cube on the lath. Install the saw band and adjust the guiding cubes.

4.9.3. Worn brush replacement

If the chip removing brush is so worn, that it does not fulfill its function, it must be replaced.

1. Release the nut of the brush, exchange the worn brush for a new one and screw the nut.
2. Set the brush to the saw band.

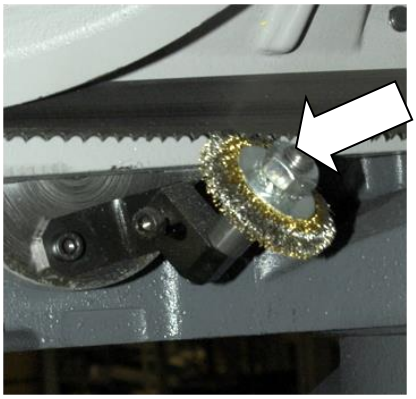

4.9.4. Stretching wheel replacement

1. Dismantle the saw band.
2. Screw off the stretching wheel screw and remove the washer.
3. Screw the auxiliary screw onto the shaft of the stretching wheel.

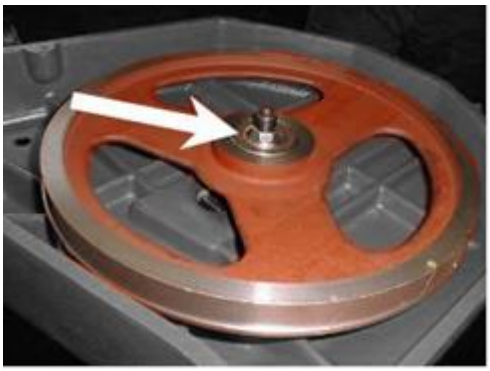

4. Put on the three-leg puller on the stretching wheel and pull off it from the shaft.

5. If the lower bearing stays on the shaft, pull of it from the shaft with a two-leg puller. Check both bearings; eventually replace them for new ones.

6. Insert the retaining ring into the hole of the new stretching wheel.
7. Insert a bearing into the hole in the wheel and push it to the retaining ring.

8. Clean the shaft and oil it. Install the new stretching wheel on the shaft.

9. Install the distance ring on the shaft and push it to the lower bearing.

10. Install second bearing on the shaft and push it to the distance ring.

11. Install the washer and screw on the stretching wheel.

12. Install the saw band. Wheel replacement is done.¨

4.9.5. Driving wheel replacement

1. Dismantle the saw band.
2. Screw of the fastening screw of the driving wheel and pull off the washer.
3. Screw on the auxiliary screw to the driving shaft.

4. Install the three-leg puller on the driving wheel and pull off it from the shaft.

5. Check, if the spring and the driving shaft are not damaged. Contact your supplier for parts replacement.

6. If the shaft and the feather are in good order, clean them, oil them and install them on the driving shaft.

7. Install the washer and screw on the driving wheel.

8. Install the saw band.

4.9.6. Cooling pump replacement

Warning!
Only a qualified technician can perform the installation!
Electrical accidents can be fatal!

1. Disconnect the machine from electrical network.
2. Pull out the tank from the pedestal as far as possible.

3. Pull out the cooling pump from the tank and disconnect the hose for the coolant distribution from the pump.

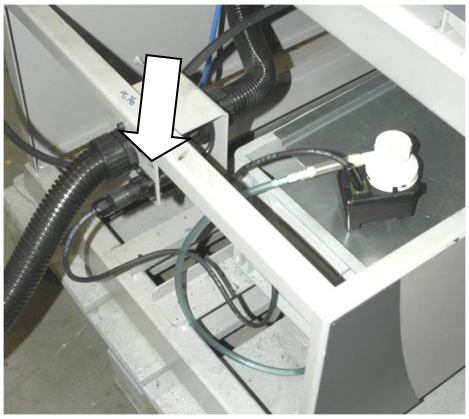

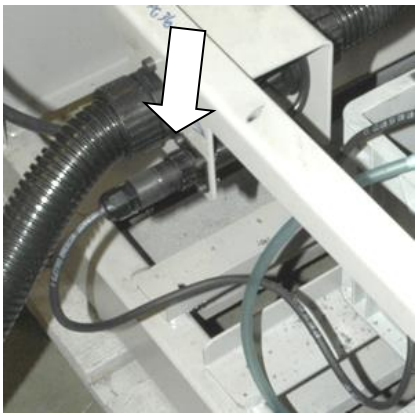

4. Disconnect the supply cable of the pump from the connector.

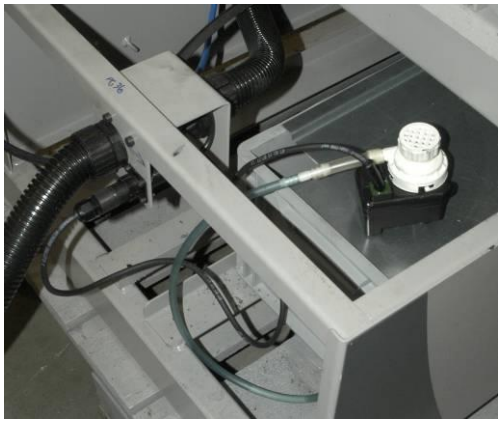

5. Complete the replacement by following these steps in reversed order.

5. Závady / Störungen / Troubleshooting

5.1. Mechanical problems

Problem	Possible causes	Repair
1. Slanting cut	- Wrongly adjusted hard metal guides.	Set according to the chapter „Servicing and adjustment“
	- Worn hard metal guides.	Replace according to the chapter „Worn pieces replacement“
	- Wrongly adjusted cubes of the saw band guiding.	Set according to the chapter „Servicing and adjustment“
	- Worn bearings of the saw band guiding.	Replace according to the chapter „Worn pieces replacement“
	- Wrongly adjusted swarf brush.	Set according to the chapter „Servicing and adjustment“
	- Worn swarf brush.	Replace according to the chapter „Worn pieces replacement“
	- Insufficient saw band stretching.	Increase the saw band stretching and set the limit switch.
	- Wrongly chosen tooth system of the saw band.	Replace the saw band; follow the instructions of the manufacturer for new saw band choice.
	- Worn saw band.	Replace the saw band.
	- Wrongly balanced roller conveyor.	Adjust the roller conveyor.
	- Dirty feeding board.	Cleanse the feeding board from debris, chip and residue material.
	- Guiding rail and guiding cube are loosened.	Tighten the guiding rail.
	- Guiding rail and cube are too far from the material.	Set the guiding cube to the material.
	- Too fast rate of movement into the cut.	Lower the material speed of descent of the arm.
	- Unexpected oscillation in material quality.	Adjust the cutting parameters and feeding speed according to the material.
2. The cut is not cut upon desired angle	- Securing lever is loosened.	Check the securing lever efficiency and carry out its adjustment according to chapter „Servicing and adjustment“.
	- Set angle does not match the cutting angle.	Check the angle adjustment with a protractor and if need be adjust it according to chapter „Servicing and adjustment“.
	- Insufficient saw band stretching.	Stretch the saw band and set the limit switch according to chapter „Servicing and adjustment“.
	- Guiding cube holder and guiding cube are loosened.	Fasten the guiding holder and the cube.
	- Dirt between material and clamping jaw.	Cleanse the material and mating jaw.
3. Short lifetime of the saw band	- Insufficient saw band stretching.	Increase the tightening of the saw band and set the sensor of saw band tightening according to chapter „Servicing and adjustment“.
	- Worn swarf brush.	Check the swarf brush condition and replace it in case of excessive wear as described in chapter „Worn pieces replacement“
	- Wrongly adjusted swarf brush.	Check swarf brush adjustment, set it according to chapter „Servicing and adjustment“
	- Over stretched saw band	Lower the stretching of the saw band and set the limit switch of the saw band stretching according to chapter „Servicing and adjustment“
	- Wrongly adjusted hard metal guides.	Check the adjustment of the hard metal guides and carry out adjustment as described in chapter „Servicing and adjustment“
	- Worn hard metal guides of the saw band.	Check the condition of the hard metal guides and if they are too worn, replace hard metal guides according to chapter „Worn pieces replacement“

Problem	Possible causes	Repair
	- Worn saw band guide bearings.	Check the guiding bearings and if you notice any excessive damage, replace them according to chapter „Worn pieces replacement“
	- Wrongly adjusted guiding cubes of the saw band.	Set the guiding cube according to chapter „Servicing and adjustment“
	- Wrongly adjusted speed of descent of the arm and saw band speed.	Adjust the descending speed and speed of the saw band according to values published by the saw band manufacturer.
	- Different material quality.	Adjust the speed of descent and speed of the saw band according to desired material (perform a test cut).
	- Low quality saw band	Replace the saw band (contact your local accessory supplier for more information)
	- Wrongly chosen saw band tooth system.	Replace the saw band, keep to the instructions of the manufacturer.
	- Wrongly adjusted run of the saw band.	Check the space between the top of the saw band and driving wheel. Adjust the tracking as described in chapter „Servicing and adjustment“ if need be.
4. Insufficient cut output.	- Worn saw band.	Replace the saw band, keep to the instructions of the manufacturer.
	- Wrong saw band tooth system.	Replace the saw band, keep to the instructions of the manufacturer.
	- Wrongly adjusted speed of descent of the arm and saw band speed..	Adjust the descending speed and speed of the saw band according to values published by the saw band manufacturer
5. The cut is not finished.	- Wrongly adjusted lower stop point of the saw frame.	Check lower limit switch and screw.
	- Stop point surface is messy.	Cleanse the stop point surface of the limit switch from debris and residue material.
6. Regulation valve cannot be turned	- Metal chips between the valve and the panel.	Chips must be removed, then put an O-Ring of about 10x2 mm onto the shaft.
	- There are metal chips inside the valve.	Valve must be cleaned or changed.
7. Saw band drive cannot be started.	- Pressure switch is wrongly adjusted.	Set the pressure switch according to chapter „Servicing and adjustment“
	- Pressure switch is defective.	Replace defective parts of the pressure switch.
8. Saw bands tend to rupture.	- Saw band run not adjusted properly	Adjust the distance of band from the rim according to operating instructions.
	- Wrongly adjusted band guiding (hard metal and bearings).	Hard metal pieces and bearings must be adjusted according to „Servicing and adjustment“.
	- Looseness in the lifting cylinder mounting.	
	- Bearings of guiding cubes are worn out (rolling elements are damaged or outside ring of bearing has conical form).	Bearings of guiding cubes must be replaced. Bearings must be adjusted according to operating instructions.
	Worn out pin of the upper or bottom holder of the lifting cylinder.	Exchange the upper or bottom holder of the lifting cylinder.
9. Damage tooth system of the saw band	- Geometry of hard metal guiding cubes is wrongly adjusted.	Hard metal guiding cubes must be adjusted.
	- Bearings of guiding cubes are worn out.	Bearings of guiding cubes must be replaced.
10. The saw is cut downing.	- Grooving on the driving wheel is worn-out.	Driving wheel must be replaced.
11. Cleansing of the saw band is not functional.	- Elastic wheel of the brush drive is worn-out.	Elastic wheel of the brush must be replaced.
	- The shaft of the brush drive is rusted.	The shaft of the brush must be cleaned and oiled.

Problem	Possible causes	Repair
	- The brush position and the brush cover is adjusted incorrectly – the cover prevents the brush from turning.	The brush cover must be repositioned, in order for the brush to be able to turn.
12. The saw arm periodically rises and descends a few millimeters during the cut; this shortens the lifetime of the saw band considerably.	- Backslash in driving wheel mounting on the shaft.	Replace following parts: the driving shaft for a longer one, bearings, distance ring, driving wheel, spring, two covers on the forehead of the shaft + screws.
	- Worn channel for spring.	

5.2. Electrical problems

Problem	Possible causes	Repair
1. Machine is not possible to start.	- No voltage in the socket	Line voltage must be checked.
	- Overload relay is defective (thermal protection)	Each FA overload relay's condition (on/off) must be checked.
	- Limit switch of either saw band stretching, band cover or saw arm is not closed	Check the saw band stretching and covers.
2. When the cut is finished, the frame is not raised.	- Bottom limit switch is adjusted wrongly.	Bottom limit switch must be adjusted according to chapter ADJUSTING.
	- A malfunction in the hydraulic (pneumatic) system. The HYTOS (BOSCH) magnetic valve is not working.	Function of magnetic valve must be checked, valve must be switched on, and voltage across its terminals and coil must be checked.
3. Electric motor and pump are without voltage. There is no voltage between the contactor and thermal protection	- Wrong contactor.	Replace the contactor of the engine.
4. The speed indicator of the saw band is not functional.	- Sensor of speed is not adjusted.	Sensor of speed must be adjusted.
	- Defective display	The display must be replaced.
	- Defective sensor – diode of indicator speed does not light.	Sensor must be changed and adjusted.
5. Occasional switching off of the hydraulic aggregate MA3 engine protection	- Too big working pressure in the hydraulic system.	Service engineer must reduce the pressure in hydraulic system.
6. The hydraulic aggregate cannot be started	Auxiliary contact on thermo-relay FA1 is defective.	Replace the defective contact on the motor FA1starter.
7. Hydraulic aggregate is switched on but the saw arm or the main vice can't be moved	- Wrong connection of electrical supply. The electrical phases are connected conversely.	The phases must be switched. Only service engineer is allowed to do this.

8.	Cooling is not active		Lack of cooling agent.	Refill the tank with cooling agent.
		-	Thermal relay is defective	Replace the thermal relay
		-	Input hosepipe is broken or obstructed.	Check the cooling circuit and eventually cleanse the cooling system.
		-	Cooling pump protection is defective	Check the protection of the cooling pump and change it if need be.
		-	Cooling pump is defective.	Replace the cooling pump.

Note:

Frequency converter
Connect the machine to electrical networks with corresponding technical parameters only.
We recommend protecting the machine with RCD protection with U characteristics, which is able to compensate changes of current escaping from the filter of the frequency converter, so that additional equipments will not be required. We don't recommend protecting the machine with a standard protection for currents smaller than 100 mA (the standard used is 30 mA) because of current escape in accordance to frequency converters used by machine. Alternative solution should be a current protection (FI) with sensitivity of 100 mA.

6. Schémata / Schemas / Schematics

6.1. Elektrická schémata / Elektroschemas / Wiring diagrams

6.1.1. 3x400V+PE, 50Hz (B1/B2)

Obsah / Table of contents / Inhalt

Strana Page Seite	Název strany Page name Seitenname	Datum Date Datum
/1	Úvodní strana / Start page / Startseite	27.05.2022
/2	Obsah / Table of contents / Inhaltsverzeichnis	27.05.2022
/3	Kusovník artiklů / Parts list / Artikelstückliste	27.05.2022
/3.a	Kusovník artiklů / Parts list / Artikelstückliste	27.05.2022
/3.b	Kusovník artiklů / Parts list / Artikelstückliste	27.05.2022
/3.c	Kusovník artiklů / Parts list / Artikelstückliste	27.05.2022
/3.d	Kusovník artiklů / Parts list / Artikelstückliste	27.05.2022
/4	Rozmístění prvků v rozvaděči R1 / Placement of elements in enclosure R1 / Platzierung der Elemente im Schaltschrank R1	27.05.2022
/5	Rozmístění prvků v ovládacím panelu OP1 / Deployment of elements in control panel OP 1 / Einsatz der Elemente in dem Bedienfeld OP 1	21.04.2022
/6	Silová část / Power part / Feld partie	27.05.2022
/7	Ovládací část / Control part / Betatigungssteurkreis	27.05.2022
/8	Bezpečnostní okruh / Safety circle / Sicherheitsbereich	27.05.2022
/9	Příslušenství / Accessories / Zubehör	27.05.2022

Kusovník artiklů / Parts list / Stückliste

Označení přístroje Device identification Geräteidentifikation	Typ přístroje Device description Gerätebeschreibung	Objednací číslo Type number Typennummer	Výrobce Manufacturer Hersteller	Skladové číslo Part number Lagernummer	Množství Quantity Menge	Umístění Location Stelle
-BM1	Bezpečnostní relé 24VDC, 3NO/1NC Safety relay 24VDC, 3NO/1NC Sicherheitsrelais 24VDC, 3NO/1NC	ABB.2TLA010040R0000	ABB	91.051.076	1	/8.6
-FU1	Pojistka trubičková - 2A/400V, pomalá, 5x20 Tube fuse - 2A/400V, slow, 5x20 Rohrsicherung - 2A / 400V, langsam, 5x20	T2A/400V	ESKA	91.230.073	1	/6.5
-FU2	Pojistka trubičková - 2A/400V, pomalá, 5x20 Tube fuse - 2A/400V, slow, 5x20 Rohrsicherung - 2A / 400V, langsam, 5x20	T2A/400V	ESKA	91.230.073	1	/6.5
-FU3	Pojistka trubičková - 2A/250V, pomalá, 5x20 Tube fuse - 2A/250V, slow, 5x20 Rohrsicherung - 2A / 250V, langsam, 5x20	T2A/250V	ESKA	91.230.001	1	/6.9
-FU7	Pojistka trubičková - 500mA/250V, pomalá, 5x20 Tube fuse - 500mA/250V, slow, 5x20 Rohrsicherung - 500 mA / 250 V, langsam, 5x20	T500mA/250V	ESKA	91.230.011	1	/9.4
-SN1	Potenciometr 4k7 Potenciometer 4k7 Potentiometer 4k7	TP195 4k7/N20A	Elektronické součástky CZ, a.s	91.283.015	1	/7.8
-HV1	Ventilový konektor, LED Valve Plug, LED Ventilanschluss, LED	VCAFA0322-LED	Finecables Co.,Ltd.	93.017.077	1	/7.2
-HV2	Ventilový konektor, LED Valve Plug, LED Ventilanschluss, LED	VCAFA0322-LED	Finecables Co.,Ltd.	93.017.077	1	/7.1
-SN1	Hlavice potenciometru - 24mm Head of potentiometer 24mm Leiter Potentiometer 24mm	S8877 BLK	GES-ELECTRONICS, a.s.	91.060.063	1	/7.8
-C1	Kondenzátor Condenser Kondensator	2200uF/50V	GM Electronic s.r.o.	91.282.063	1	/6.8
-RCF11	Filtr RFC vývodový Efferent RFC filter Ableitenden RFC Filter	FBOPR1624	Ing. Miroslav Vlček	91.041.015	1	/6.1
-RCF12	Filtr RFC vývodový Efferent RFC filter Ableitenden RFC Filter	FBOPR1624	Ing. Miroslav Vlček	91.041.015	1	/6.1

The manufacturer reserves right to use an equivalent replacement device.

2

BOMAR, s.r.o. Těžební 1236/1 CZ 627 00, Brno	Stroj/Machine/Maschine: ERGONOMIC 320.258 DG	Název stránky/Name page/Name seiten: Kusovník artiklů / Parts list / Artikelstückliste	Číslo dok./Doc.No/Anzahl der Dokumente.: ES-101.162-B1/B2-V4.5 Napájení/Power supply/Einspeinsung: 3x400V + PE, 50 Hz Zpracoval/Processed /Hat verarbeitet: Datum/Date/Datum: 27.05.2022	List/Page/Seite: 3 Listů/Pages/Seiten: 13

Kusovník artiklů / Parts list / Stückliste

Označení přístroje Device identification Geräteidentifikation	Typ přístroje Device description Gerätebeschreibung	Objednací číslo Type number Typennummer	Výrobce Manufacturer Hersteller	Skladové číslo Part number Lagernummer	Množství Quantity Menge	Umístění Location Stelle
-+OP1	Nálepka ovládacího panelu Sticker control panel Aufkleber Bedienfeld	31.0513-404	Ing. Vrána	31.0513-404	1	/5.1
-FU4	Pojistka trubičková - 700mA/250V, pomalá, 5x20 Tube fuse - 700mA/250V, slow, 5x20 Rohrsicherung - 700mA / 250V, langsam, 5x20	T700mA/250V	ESKA	91.230.069	1	/6.5
-FU5	Pojistka trubičková - 700mA/250V, pomalá, 5x20 Tube fuse - 700mA/250V, slow, 5x20 Rohrsicherung - 700mA / 250V, langsam, 5x20	T700mA/250V	ESKA	91.230.069	1	/6.5
-FU6	Pojistka trubičková - 200mA/250V, pomalá, 5x20 Tube fuse - 200mA/250V, slow, 5x20 Rohrsicherung - 160mA / 250V, langsam, 5x20	T200mA/250V	ESKA	91.230.037	1	/9.2
-KM11	Stykač - 4kW/400V, 3P Contactor - 4kW/400V, 3P Schütz - 4 kW / 400V, 3P	AF09-30-01-11	ABB	91.040.047	1	/8.8
-KM11	Pomocný kontakt - 1xNO Auxiliary contact - 1xNO Hilfskontakt - 1xNO	CA4-10	ABB	91.041.044	1	/8.8
-KM12	Stykač - 4kW/400V, 3P Contactor - 4kW/400V, 3P Schütz - 4 kW / 400V, 3P	AF09-30-01-11	ABB	91.040.047	1	/8.9
-KM12	Pomocný kontakt - 1xNO Auxiliary contact - 1xNO Hilfskontakt - 1xNO	CA4-10	ABB	91.041.044	1	/8.9
-PA1	Pojistkový odpínač pro válcové vložky - 3P Switch fuse for the cylinder inserts - 3P Schalter Sicherung für den Zylindereinsätze - 3P	E 93/32	ABB	91.241.014	1	/6.2
-QS1	Rukojeť odpínače - černá Handle switch - black Griffschalter - schwarz	OHBS3RH	ABB	91.180.016	1	/6.1
-QS1	Kryt svorek Terminal shroud Klemmenabdeckung	OTS40T3	ABB	91.170.017	1	/6.1
-RE1	Patice pro relé Relay socket Relaissockel	CR-PSS	ABB	91.051.048	1	/7.5

The manufacturer reserves right to use an equivalent replacement device.

3

BOMAR, s.r.o. Těžební 1236/1 CZ 627 00, Brno	Stroj/Machine/Maschine: ERGONOMIC 320.258 DG	Název stránky/Name page/Name seiten: Kusovník artiklů / Parts list / Artikelstückliste	Číslo dok./Doc.No/Anzahl der Dokumente.:	ES-101.162-B1/B2-V4.5	List/Page/Seite: 3.a
			Napájení/Power supply/Einspeinsung:	3x400V + PE, 50 Hz	Listů/Pages/Seiten: 13
			Zpracoval/Processed /Hat verarbeitet:		
			Datum/Date/Datum:	27.05.2022	

Kusovník artiklů / Parts list / Stückliste

Označení přístroje Device identification Geräteidentifikation	Typ přístroje Device description Gerätebeschreibung	Objednací číslo Type number Typennummer	Výrobce Manufacturer Hersteller	Skladové číslo Part number Lagernummer	Množství Quantity Menge	Umístění Location Stelle
-RE1	Paticové relé CR-P Plug-in relay CR-P Stecken Sie in Relais CR-P	CR-P024DC2	ABB	91.051.049	1	/7.5
-RE2	Patice pro relé Relay socket Relaissockel	CR-PSS	ABB	91.051.048	1	/7.8
-RE2	Paticové relé CR-P Plug-in relay CR-P Stecken Sie in Relais CR-P	CR-P024DC2	ABB	91.051.049	1	/7.8
-SA1	Hlavice s otočným přepínačem - 4 polohy Head with rotary switch - 4 positions Kopf mit Drehschalter - 4 Positionen	M22 - WRK4	EATON	91.060.087	1	/7.3
-SA1	Upevňovací adaptér Mounting adapter Montageadapter	M22-A4	EATON	91.061.045	1	/7.3
-SA1	Kontaktní blok - 1NO Contact block - 1NO Kontaktblock - 1NO	M22-K10	EATON	91.061.022	2	/7.3
-SA1	Kontaktní blok - 1NC Contact block - 1NC Kontaktblock - 1NC	M22-K01	EATON	91.061.024	1	/7.3
-SB1	Total stop - hlavice + 3xNC Emergency-stop mushroom push - button + 3xNC Not-Aus-Pilz - Taster + 3 xNC	YW1B-V4E02R	IDEC	91.060.084	1	/8.4
-SN1	Svorka rychloupínací Fastconnect clamp Fast Connect Klemm	WAGO 224-112	WAGO	91.250.009	3	/7.8
-TR1	Toroidní transformátor - 400V/230V/20V 3,5A 185VA Toroidal transformer - 400V / 230V / 20V 3.5A 185 VA Ringkerntransformator - 400V / 230V / 20V 3.5A 185 VA	400V/230V/20V 3,5A 185VA	KARBAN s.r.o.	91.080.041	1	/6.6
-SQ3	Bezpečnostní koncový spínač - 2xNC Safety Limit Switch - 2x NC Sicherheitsendschalter - 2x NC	QKS8	KEDU	91.173.012	1	/8.4
-PA1	Pojistka válcová - 10A, 10x38, rychlá Tube fuse - 10A, 10x38, fast Rohrsicherung - 10A, 10x38, schnell	PV10 10A gG	OEZ	91.231.008	3	/6.2

The manufacturer reserves right to use an equivalent replacement device.

3.a

Kusovník artiklů / Parts list / Stückliste

Označení přístroje Device identification Geräteidentifikation	Typ přístroje Device description Gerätebeschreibung	Objednací číslo Type number Typennummer	Výrobce Manufacturer Hersteller	Skladové číslo Part number Lagernummer	Množství Quantity Menge	Umístění Location Stelle
-BM1	Bezpečnostní relé Safety relay Sicherheitsrelais	G9SB-3010 DC24	OMRON	91.051.081	1	/8.6
-SQ1	Koncový spínač - 1NC+1NO Limit switch - 1NC+1NO Endschalter - 1NC+1NO	D4N-4A31	OMRON	91.173.007	1	/7.3
-SQ2	Koncový spínač - 1NC+1NO Limit switch - 1NC+1NO Endschalter - 1NC+1NO	D4N-4A31	OMRON	91.173.007	1	/7.4
-FM1	Frekvenční měnič - 1.5kW, 3x400VAC Frequency converter - 1.5kW, 3x400VAC Frequenzumrichter - 1,5kW, 3x400VAC	VFD4A2ME43AFNAA	DELTA ELECTRONICS, INC.	91.012.197	1	/7.5
-M2	Čerpadlo chlazení 80W Cooling pump 80W Kühlpumpe 80W	PA70-M	SAP srl	91.020.035	1	/6.5
-FU1	Svorka pojistková Fuse terminal Sicherungsklemme	SKJ - 2.5D	SMS Technology	91.251.102	1	/6.5
-FU1	Svorka pojistková - koncové čelo Fuse terminal - termination Sicherungsklemme - Abschluss	SKJ - 2.5 RDG	SMS Technology	91.252.123	1	/6.5
-FU2	Svorka pojistková Fuse terminal Sicherungsklemme	SKJ - 2.5D	SMS Technology	91.251.102	1	/6.5
-FU3	Svorka pojistková Fuse terminal Sicherungsklemme	SKJ - 2.5D	SMS Technology	91.251.102	1	/6.9
-FU4	Svorka pojistková Fuse terminal Sicherungsklemme	SKJ - 2.5D	SMS Technology	91.251.102	1	/6.5
-FU5	Svorka pojistková Fuse terminal Sicherungsklemme	SKJ - 2.5D	SMS Technology	91.251.102	1	/6.5
-FU6	Svorka pojistková Fuse terminal Sicherungsklemme	SKJ - 2.5D	SMS Technology	91.251.102	1	/9.2

The manufacturer reserves right to use an equivalent replacement device.

3.b

Kusovník artiklů / Parts list / Stückliste

Označení přístroje Device identification Geräteidentifikation	Typ přístroje Device description Gerätebeschreibung	Objednací číslo Type number Typennummer	Výrobce Manufacturer Hersteller	Skladové číslo Part number Lagernummer	Množství Quantity Menge	Umístění Location Stelle
-FU7	Svorka pojistková Fuse terminal Sicherungsklemme	SKJ - 2.5D	SMS Technology	91.251.102	1	/9.4
-DM1	Usměrňovací můstek - 6A,100V Rectifier bridge - 6A, 100V Brückengleichrichter - 6A, 100V	KBU6B	SOS Electronic, spol. s r.o.	91.280.019	1	/6.7
-QS1	3 pólový odpínač, 16A Disconnector - 3P, 16A Trennschalter - 3P, 16A	OT16FT3	ABB	91.170.018	1	/6.1
-SB2	Hlavice tlačítka zelená Head green button Head green button	ZB5AA3	TELEMECANIQUE	91.060.014	1	/7.5
-SB3	Hlavice tlačítka černá Button black head Taste Mitesser	ZB5AA2	TELEMECANIQUE	91.060.013	1	/7.6
-SB4	Hlavice prosvětleného tlačítka modrá The button head backlit blue Der Knopfkopf blau hinterleuchtet	ZBAW36	TELEMECANIQUE	91.060.062	1	/8.7
-SB5	Hlavice tlačítka černá Button black head Taste Mitesser	ZB5AA2	TELEMECANIQUE	91.060.013	1	/7.2

The manufacturer reserves right to use an equivalent replacement device.

3.c

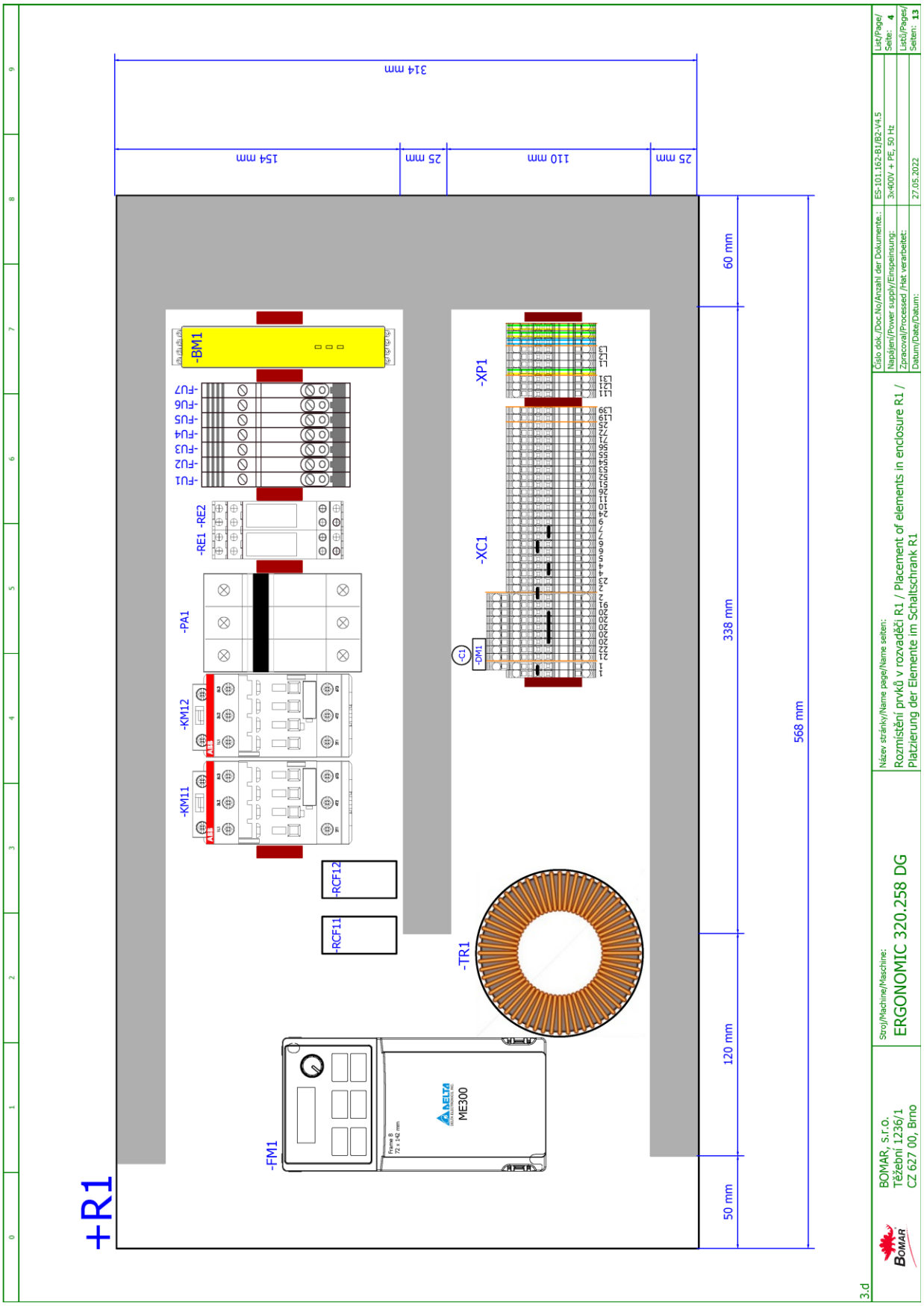
+R1
-FM1
ME300
-TR1
-RCF11
-RCF12
-KM11
-KM12
-PA1
-RE1 -RE2
-FU1
-FU2
-FU3
-FU4
-FU5
-FU6
-FU7
-BM1
-XC1
-XP1
-DM1
-C1
314 mm
154 mm
25 mm
110 mm
25 mm
60 mm
338 mm
568 mm
120 mm
50 mm
BOMAR, s.r.o.
Těžební 1236/1
CZ 627 00, Brno
Stroj/Machine/Maschine:
ERGONOMIC 320.258 DG
Název stránky/Name page/Name seiten:
Rozmístění prvků v rozvaděči R1 / Placement of elements in enclosure R1 /
Platzierung der Elemente im Schaltschrank R1
Číslo dok./Doc.No/Anzahl der Dokumente.:
ES-101.162-B1/B2-V4.5
Napájení/Power supply/Einspeinsung:
3x400V + PE, 50 Hz
Zpracoval/Processed /Hat verarbeitet:
Datum/Date/Datum:
27.05.2022
List/Page/
Seite: 4
Listů/Pages/
Seiten: 13
3.d

+OP1

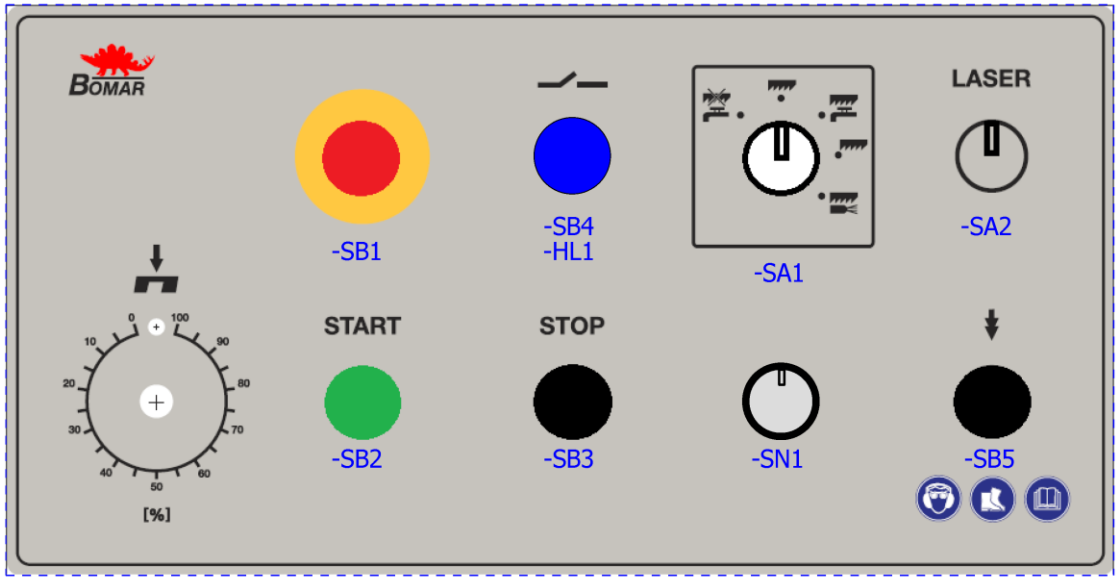

4

BOMAR, s.r.o. Těžební 1236/1 CZ 627 00, Brno	Stroj/Machine/Maschine: ERGONOMIC 320.258 DG	Název stránky/Name page/Name seiten: Rozmístění prvků v ovládacím panelu OP1 / Deployment of elements in control panel OP 1 / Einsatz der Elemente in dem Bedienfeld OP 1	Číslo dok./Doc.No/Anzahl der Dokumente.:	ES-101.162-B1/B2-V4.5	List/Page/Seite: 5
			Napájení/Power supply/Einspeisung:	3x400V + PE, 50 Hz	Listů/Pages/Seiten: 13
			Zpracoval/Processed /Hat verarbeitet:		
			Datum/Date/Datum:	21.04.2022	

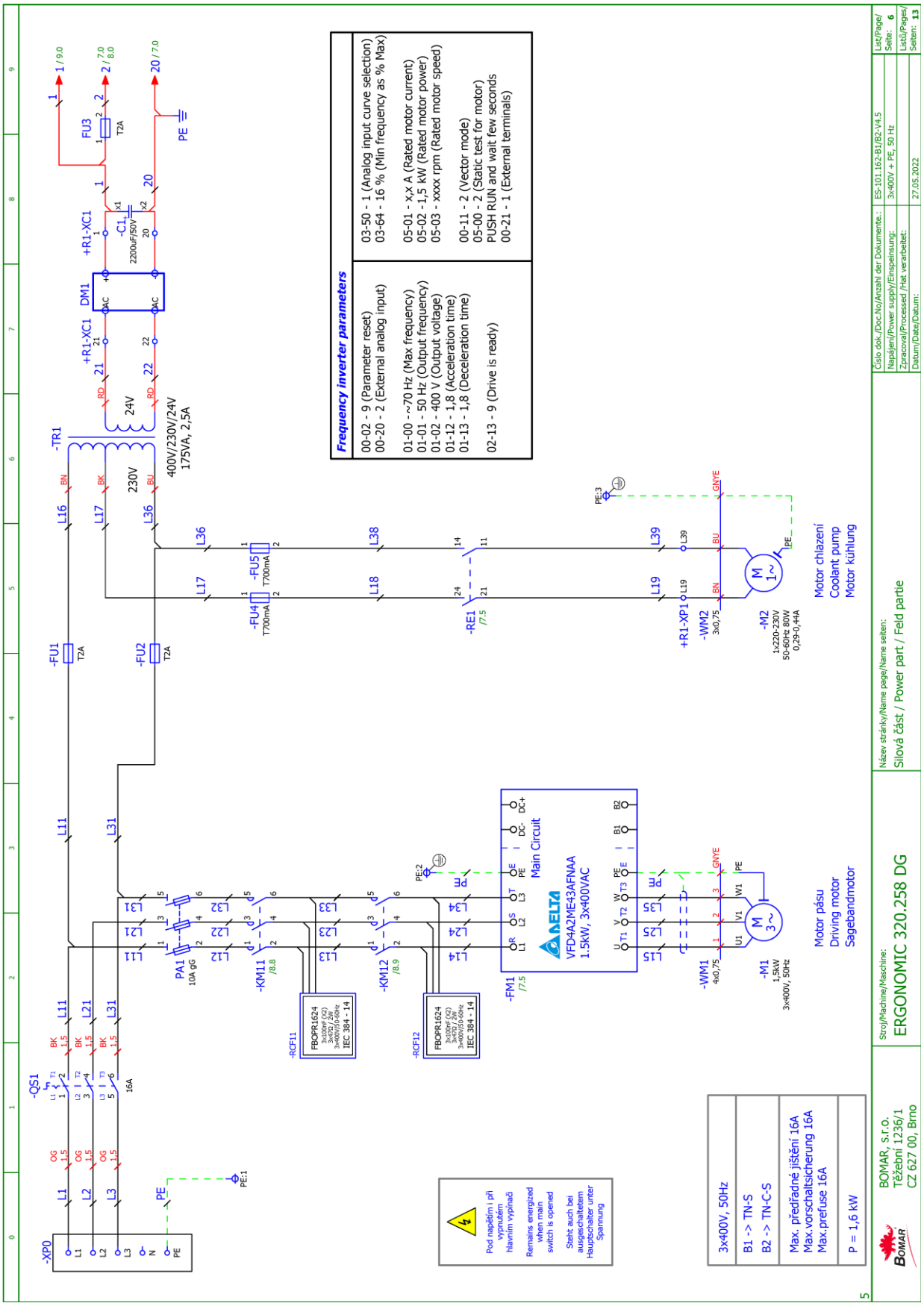
Frequency inverter parameters
00-02 - 9 (Parameter reset)
00-20 - 2 (External analog input)
01-00 - ~70 Hz (Max frequency)
01-01 - 50 Hz (Output frequency)
01-02 - 400 V (Output voltage)
01-12 - 1,8 (Acceleration time)
01-13 - 1,8 (Deceleration time)
02-13 - 9 (Drive is ready)
03-50 - 1 (Analog input curve selection)
03-64 - 16 % (Min frequency as % Max)
05-01 - x,x A (Rated motor current)
05-02 - 1,5 kW (Rated motor power)
05-03 - xxxx rpm (Rated motor speed)
00-11 - 2 (Vector mode)
05-00 - 2 (Static test for motor)
PUSH RUN and wait few seconds
00-21 - 1 (External terminals)
400V/230V/24V
175VA, 2,5A
VFD4A2ME43AFNAA
1.5kW, 3x400VAC
Main Circuit
Motor chlazení
Coolant pump
Motor kühlung
Motor pásu
Driving motor
Sagebandmotor
Pod napětím i při vypnutém hlavním vypínači
Remains energized when main switch is opened
Steht auch bei ausgeschaltetem Hauptschalter unter Spannung
3x400V, 50Hz
B1 -> TN-S
B2 -> TN-C-S
Max. předřadné jištění 16A
Max.vorschaltsicherung 16A
Max.prefuse 16A
P = 1,6 kW
BOMAR, s.r.o.
Těžební 1236/1
CZ 627 00, Brno
Stroj/Machine/Maschine:
ERGONOMIC 320.258 DG
Název stránky/Name page/Name seiten:
Silová část / Power part / Feld partie
Číslo dok./Doc.No/Anzahl der Dokumente.:
ES-101.162-B1/B2-V4.5
Napájení/Power supply/Einspeinsung:
3x400V + PE, 50 Hz
Zpracoval/Processed /Hat verarbeitet:
Datum/Date/Datum:
27.05.2022
List/Page/
Seite: 6
Listů/Pages/
Seiten: 13

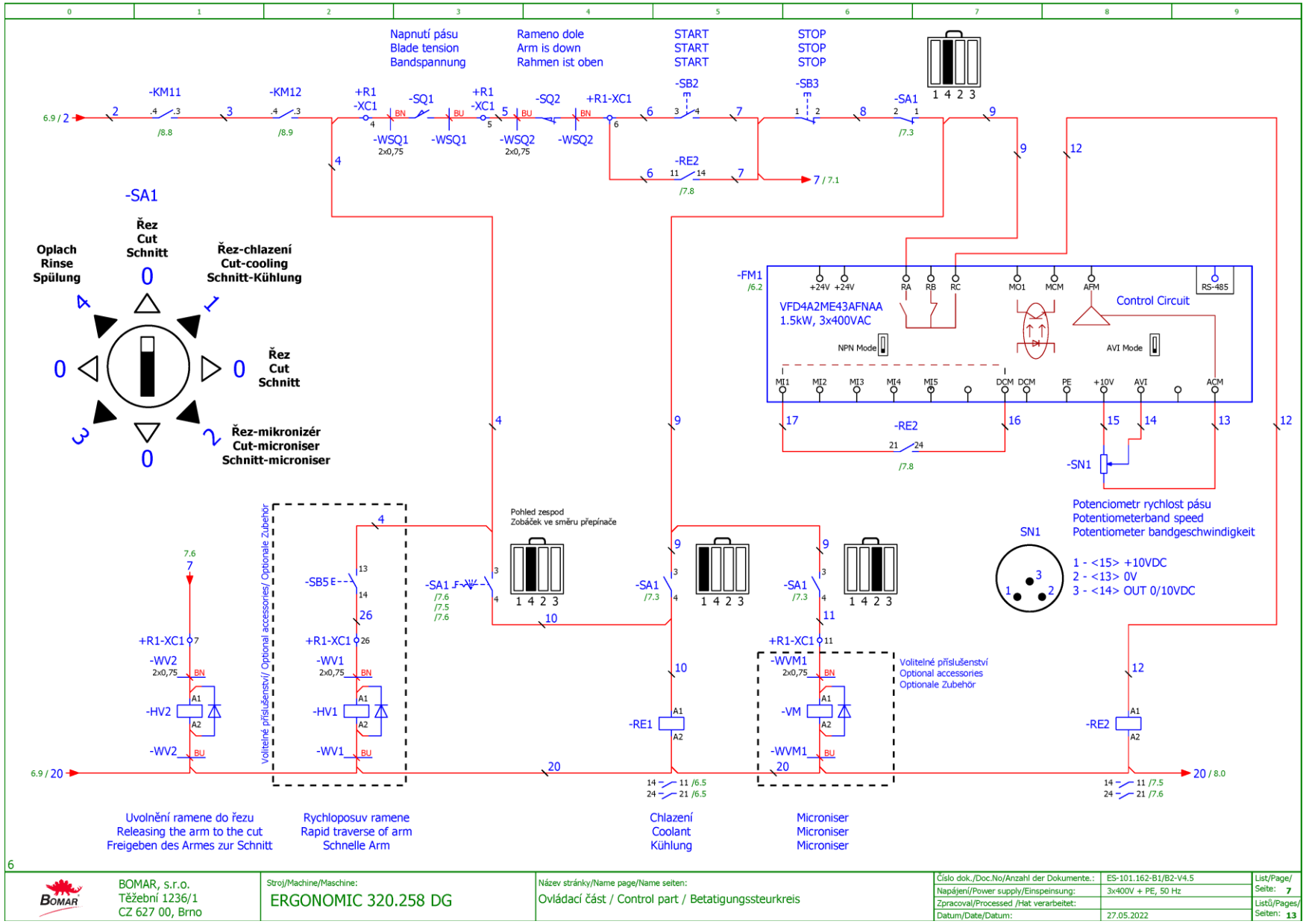

Schéma
Schemata
Schematics

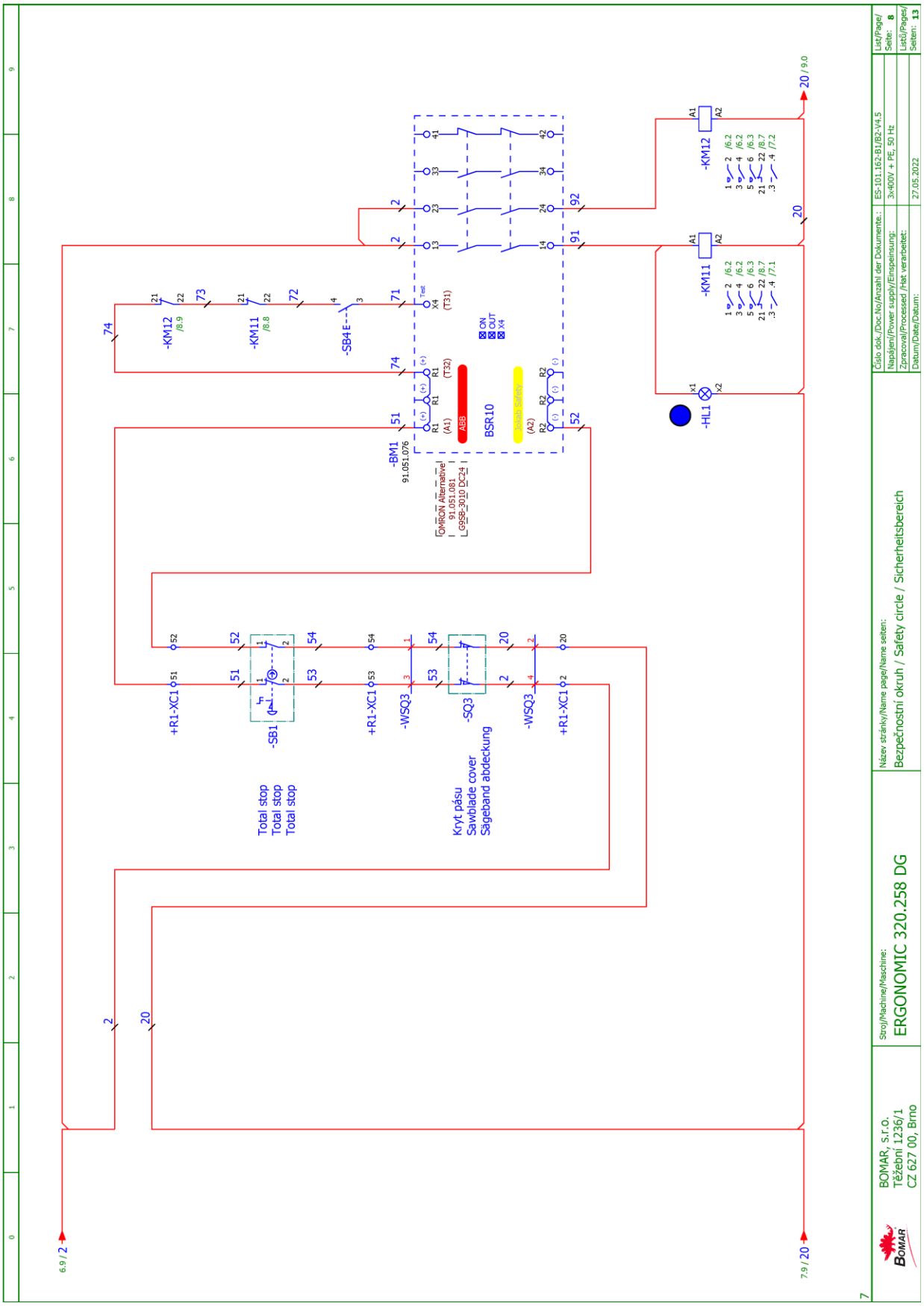
-KM12
/8.9
-KM11
/8.8
-SB4 E
-BM1
91.051.076
OMRON Alternative
91.051.081
G9SB-3010 DC24
BSR10
ABB
-KM12
-KM11
-HL1
+R1-XC1
-SB1
Total stop
Total stop
Total stop
-WSQ3
-SQ3
Kryt pásu
Sawblade cover
Sägeband abdeckung
6.9 / 2
7.9 / 20
20 / 9.0
Název stránky/Name page/Name seiten:
Bezpečnostní okruh / Safety circle / Sicherheitsbereich
Stroj/Machine/Maschine:
ERGONOMIC 320.258 DG
BOMAR, s.r.o.
Těžební 1236/1
CZ 627 00, Brno
List/Page/
Seite: 8
Listů/Pages/
Seiten: 13
ES-101.162-B1/B2-V4.5
3x400V + PE, 50 Hz
27.05.2022

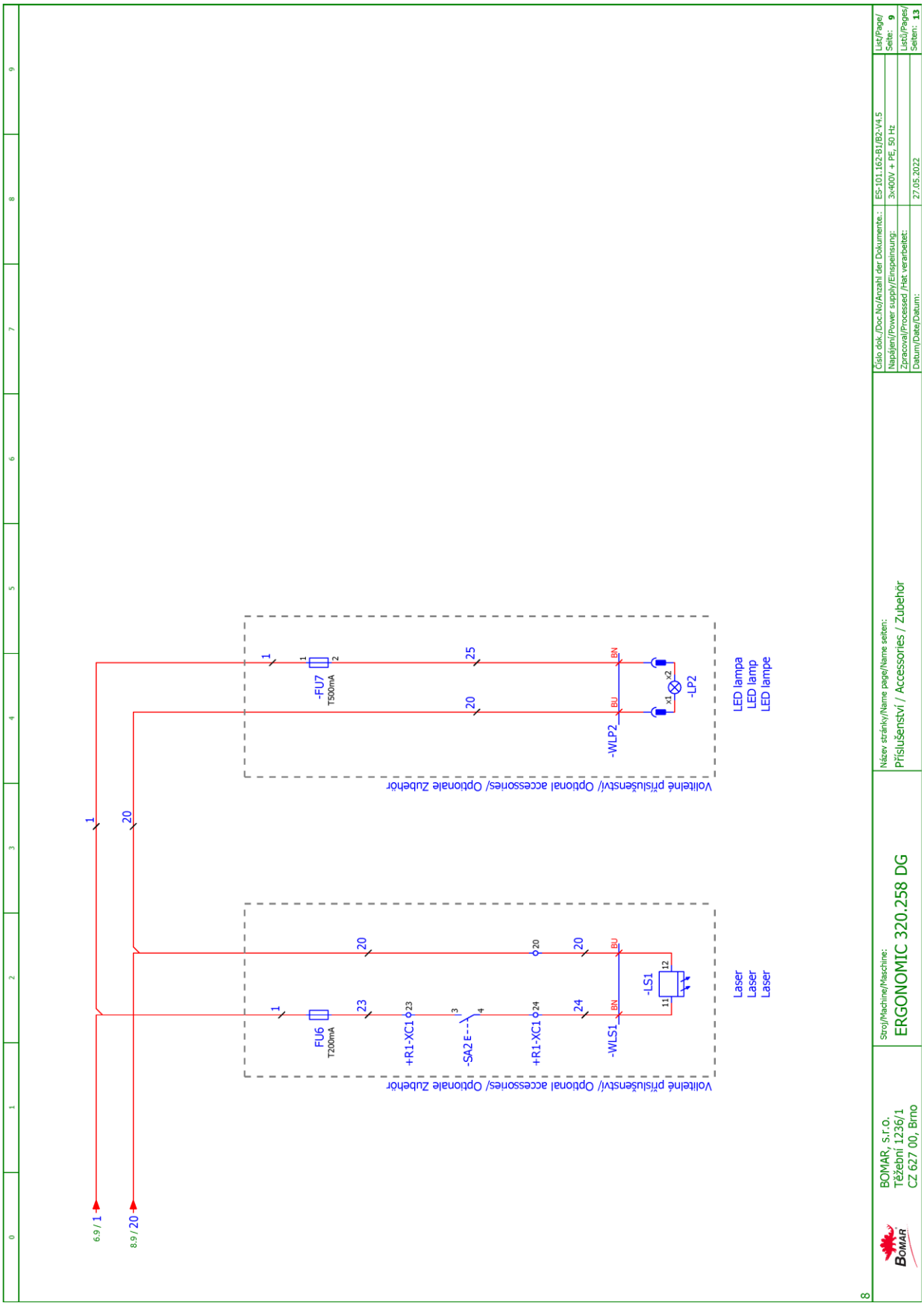
6.9 / 1
8.9 / 20
1
20
Volitelné příslušenství/ Optional accessories/ Optional Zubehör
FU6
T200mA
+R1-XC1
-SA2 E
+R1-XC1
-WLS1
-LS1
Laser
Laser
Laser
Volitelné příslušenství/ Optional accessories/ Optional Zubehör
-FU7
T500mA
-WLP2
-LP2
LED lampa
LED lamp
LED lampe
Číslo dok./Doc.No/Anzahl der Dokumente:
ES-101.162-B1/B2-V4.5
Napájení/Power supply/Einspeisung:
3x400V + PE, 50 Hz
Zpracoval/Processed /Hat verarbeitet:
Datum/Date/Datum:
27.05.2022
List/Page/
Seite: 9
Listů/Pages/
Seiten: 13
Název stránky/Name page/Name seiten:
Příslušenství / Accessories / Zubehör
Stroj/Machine/Maschine:
ERGONOMIC 320.258 DG
BOMAR, s.r.o.
Těžební 1236/1
CZ 627 00, Brno
8

6.1.2. 3x230V+PE, 50Hz (B3)

Obsah / Table of contents / Inhalt

Strana Page Seite	Název strany Page name Seitenname	Datum Date Datum
/1	Úvodní strana / Start page / Startseite	27.05.2022
/2	Obsah / Table of contents / Inhaltsverzeichnis	27.05.2022
/3	Kusovník artiklů / Parts list / Artikelstückliste	27.05.2022
/3.a	Kusovník artiklů / Parts list / Artikelstückliste	27.05.2022
/3.b	Kusovník artiklů / Parts list / Artikelstückliste	27.05.2022
/3.c	Kusovník artiklů / Parts list / Artikelstückliste	27.05.2022
/3.d	Kusovník artiklů / Parts list / Artikelstückliste	27.05.2022
/4	Rozmístění prvků v rozvaděči R1 / Placement of elements in enclosure R1 / Platzierung der Elemente im Schaltschrank R1	27.05.2022
/5	Rozmístění prvků v ovládacím panelu OP1 / Deployment of elements in control panel OP 1 / Einsatz der Elemente in dem Bedienfeld OP 1	25.08.2021
/6	Silová část / Power part / Feld partie	27.05.2022
/7	Ovládací část / Control part / Betatigungssteurkreis	27.05.2022
/8	Bezpečnostní okruh / Safety circle / Sicherheitsbereich	27.05.2022
/9	Příslušenství / Accessories / Zubehör	27.05.2022

Kusovník artiklů / Parts list / Stückliste

Označení přístroje Device identification Geräteidentifikation	Typ přístroje Device description Gerätebeschreibung	Objednací číslo Type number Typennummer	Výrobce Manufacturer Hersteller	Skladové číslo Part number Lagernummer	Množství Quantity Menge	Umístění Location Stelle
-BM1	Bezpečnostní relé 24VDC, 3NO/1NC Safety relay 24VDC, 3NO/1NC Sicherheitsrelais 24VDC, 3NO/1NC	ABB.2TLA010040R0000	ABB	91.051.076	1	/8.6
-FU1	Pojistka trubičková - 2A/400V, pomalá, 5x20 Tube fuse - 2A/400V, slow, 5x20 Rohrsicherung - 2A / 400V, langsam, 5x20	T2A/400V	ESKA	91.230.073	1	/6.4
-FU2	Pojistka trubičková - 2A/400V, pomalá, 5x20 Tube fuse - 2A/400V, slow, 5x20 Rohrsicherung - 2A / 400V, langsam, 5x20	T2A/400V	ESKA	91.230.073	1	/6.4
-FU3	Pojistka trubičková - 2A/250V, pomalá, 5x20 Tube fuse - 2A/250V, slow, 5x20 Rohrsicherung - 2A / 250V, langsam, 5x20	T2A/250V	ESKA	91.230.001	1	/6.9
-FU7	Pojistka trubičková - 500mA/250V, pomalá, 5x20 Tube fuse - 500mA/250V, slow, 5x20 Rohrsicherung - 500 mA / 250 V, langsam, 5x20	T500mA/250V	ESKA	91.230.011	1	/9.4
-SN1	Potenciometr 4k7 Potenciometer 4k7 Potentiometer 4k7	TP195 4k7/N20A	Elektronické součástky CZ, a.s	91.283.015	1	/7.8
-HV1	Ventilový konektor, LED Valve Plug, LED Ventilanschluss, LED	VCAFA0322-LED	Finecables Co.,Ltd.	93.017.077	1	/7.2
-HV2	Ventilový konektor, LED Valve Plug, LED Ventilanschluss, LED	VCAFA0322-LED	Finecables Co.,Ltd.	93.017.077	1	/7.1
-SN1	Hlavice potenciometru - 24mm Head of potentiometer 24mm Leiter Potentiometer 24mm	S8877 BLK	GES-ELECTRONICS, a.s.	91.060.063	1	/7.8
-C1	Kondenzátor Condenser Kondensator	2200uF/50V	GM Electronic s.r.o.	91.282.063	1	/6.8
-RCF11	Filtr RFC vývodový Efferent RFC filter Ableitenden RFC Filter	FBOPR1624	Ing. Miroslav Vlček	91.041.015	1	/6.1
-RCF12	Filtr RFC vývodový Efferent RFC filter Ableitenden RFC Filter	FBOPR1624	Ing. Miroslav Vlček	91.041.015	1	/6.1

The manufacturer reserves right to use an equivalent replacement device.

2

Kusovník artiklů / Parts list / Stückliste

Označení přístroje Device identification Geräteidentifikation	Typ přístroje Device description Gerätebeschreibung	Objednací číslo Type number Typennummer	Výrobce Manufacturer Hersteller	Skladové číslo Part number Lagernummer	Množství Quantity Menge	Umístění Location Stelle
-+OP1	Nálepka ovládacího panelu Sticker control panel Aufkleber Bedienfeld	31.0513-404	Ing. Vrána	31.0513-404	1	/5.1
-FU4	Svorka pojistková Fuse terminal Sicherungsklemme	WK4/THSi5U	WIELAND	91.251.102	1	/6.5
-FU4	Pojistka trubičková - 700mA/250V, pomalá, 5x20 Tube fuse - 700mA/250V, slow, 5x20 Rohrsicherung - 700mA / 250V, langsam, 5x20	T700mA/250V	ESKA	91.230.069	1	/6.5
-FU5	Svorka pojistková Fuse terminal Sicherungsklemme	WK4/THSi5U	WIELAND	91.251.102	1	/6.5
-FU5	Pojistka trubičková - 700mA/250V, pomalá, 5x20 Tube fuse - 700mA/250V, slow, 5x20 Rohrsicherung - 700mA / 250V, langsam, 5x20	T700mA/250V	ESKA	91.230.069	1	/6.5
-FU6	Pojistka trubičková - 200mA/250V, pomalá, 5x20 Tube fuse - 200mA/250V, slow, 5x20 Rohrsicherung - 160mA / 250V, langsam, 5x20	T200mA/250V	ESKA	91.230.037	1	/9.2
-KM11	Stykač - 4kW/400V, 3P Contactor - 4kW/400V, 3P Schütz - 4 kW / 400V, 3P	AF09-30-01-11	ABB	91.040.047	1	/8.8
-KM11	Pomocný kontakt - 1xNO Auxiliary contact - 1xNO Hilfskontakt - 1xNO	CA4-10	ABB	91.041.044	1	/8.8
-KM12	Stykač - 4kW/400V, 3P Contactor - 4kW/400V, 3P Schütz - 4 kW / 400V, 3P	AF09-30-01-11	ABB	91.040.047	1	/8.9
-KM12	Pomocný kontakt - 1xNO Auxiliary contact - 1xNO Hilfskontakt - 1xNO	CA4-10	ABB	91.041.044	1	/8.9
-PA1	Pojistkový odpínač pro válcové vložky - 3P Switch fuse for the cylinder inserts - 3P Schalter Sicherung für den Zylindereinsätze - 3P	E 93/32	ABB	91.241.014	1	/6.2
-QS1	3 pólový odpínač, 16A Disconnector - 3P, 16A Trennschalter - 3P, 16A	OT16FT3	ABB	91.170.018	1	/6.1

The manufacturer reserves right to use an equivalent replacement device.

Kusovník artiklů / Parts list / Stückliste

Označení přístroje Device identification Geräteidentifikation	Typ přístroje Device description Gerätebeschreibung	Objednací číslo Type number Typennummer	Výrobce Manufacturer Hersteller	Skladové číslo Part number Lagernummer	Množství Quantity Menge	Umístění Location Stelle
-QS1	Rukojeť odpínače - černá Handle switch - black Griffschalter - schwarz	OHBS3RH	ABB	91.180.016	1	/6.1
-QS1	Kryt svorek Terminal shroud Klemmenabdeckung	OTS40T3	ABB	91.170.017	1	/6.1
-RE1	Patice pro relé Relay socket Relaissockel	CR-PSS	ABB	91.051.048	1	/7.5
-RE1	Paticové relé CR-P Plug-in relay CR-P Stecken Sie in Relais CR-P	CR-P024DC2	ABB	91.051.049	1	/7.5
-RE2	Patice pro relé Relay socket Relaissockel	CR-PSS	ABB	91.051.048	1	/7.8
-RE2	Paticové relé CR-P Plug-in relay CR-P Stecken Sie in Relais CR-P	CR-P024DC2	ABB	91.051.049	1	/7.8
-SA1	Hlavice s otočným přepínačem - 4 polohy Head with rotary switch - 4 positions Kopf mit Drehschalter - 4 Positionen	M22 - WRK4	EATON	91.060.087	1	/7.3
-SA1	Upevňovací adaptér Mounting adapter Montageadapter	M22-A4	EATON	91.061.045	1	/7.3
-SA1	Kontaktní blok - 1NO Contact block - 1NO Kontaktblock - 1NO	M22-K10	EATON	91.061.022	2	/7.3
-SA1	Kontaktní blok - 1NC Contact block - 1NC Kontaktblock - 1NC	M22-K01	EATON	91.061.024	1	/7.3
-SB1	Total stop - hlavice + 3xNC Emergency-stop mushroom push - button + 3xNC Not-Aus-Pilz - Taster + 3 xNC	YW1B-V4E02R	IDEC	91.060.084	1	/8.4
-SN1	Svorka rychloupínací Fastconnect clamp Fast Connect Klemm	WAGO 224-112	WAGO	91.250.009	3	/7.8

The manufacturer reserves right to use an equivalent replacement device.

3.a

Kusovník artiklů / Parts list / Stückliste

Označení přístroje Device identification Geräteidentifikation	Typ přístroje Device description Gerätebeschreibung	Objednací číslo Type number Typennummer	Výrobce Manufacturer Hersteller	Skladové číslo Part number Lagernummer	Množství Quantity Menge	Umístění Location Stelle
-TR1	Toroidní transformátor - 400V/230V/20V 3,5A 185VA Toroidal transformer - 400V / 230V / 20V 3.5A 185 VA Ringkerntransformator - 400V / 230V / 20V 3.5A 185 VA	400V/230V/20V 3,5A 185VA	KARBAN s.r.o.	91.080.041	1	/6.6
-SQ3	Bezpečnostní koncový spínač - 2xNC Safety Limit Switch - 2x NC Sicherheitsendschalter - 2x NC	QKS8	KEDU	91.173.012	1	/8.4
-PA1	Pojistka válcová - 10A, 10x38, rychlá Tube fuse - 10A, 10x38, fast Rohrsicherung - 10A, 10x38, schnell	PV10 10A gG	OEZ	91.231.008	3	/6.2
-BM1	Bezpečnostní relé Safety relay Sicherheitsrelais	G9SB-3010 DC24	OMRON	91.051.081	1	/8.6
-SQ1	Koncový spínač - 1NC+1NO Limit switch - 1NC+1NO Endschalter - 1NC+1NO	D4N-4A31	OMRON	91.173.007	1	/7.3
-SQ2	Koncový spínač - 1NC+1NO Limit switch - 1NC+1NO Endschalter - 1NC+1NO	D4N-4A31	OMRON	91.173.007	1	/7.4
-FM1	Frekvenční měnič - 1.5kW, 3x230VAC Frequency converter - 1.5kW, 3x230VAC Frequenzumrichter - 1.5kW, 3x230VAC	VFD7A5ME23ANNAA	DELTA ELECTRONICS, INC.	91.012.195	1	/7.5
-M2	Čerpadlo chlazení 80W Cooling pump 80W Kühlpumpe 80W	PA70-M	SAP srl	91.020.035	1	/6.5
-FU1	Svorka pojistková Fuse terminal Sicherungsklemme	SKJ - 2.5D	SMS Technology	91.251.102	1	/6.4
-FU1	Svorka pojistková - koncové čelo Fuse terminal - termination Sicherungsklemme - Abschluss	SKJ - 2.5 RDG	SMS Technology	91.252.123	1	/6.4
-FU2	Svorka pojistková Fuse terminal Sicherungsklemme	SKJ - 2.5D	SMS Technology	91.251.102	1	/6.4
-FU3	Svorka pojistková Fuse terminal Sicherungsklemme	SKJ - 2.5D	SMS Technology	91.251.102	1	/6.9

The manufacturer reserves right to use an equivalent replacement device.

Kusovník artiklů / Parts list / Stückliste

Označení přístroje Device identification Geräteidentifikation	Typ přístroje Device description Gerätebeschreibung	Objednací číslo Type number Typennummer	Výrobce Manufacturer Hersteller	Skladové číslo Part number Lagernummer	Množství Quantity Menge	Umístění Location Stelle
-FU6	Svorka pojistková Fuse terminal Sicherungsklemme	SKJ - 2.5D	SMS Technology	91.251.102	1	/9.2
-FU7	Svorka pojistková Fuse terminal Sicherungsklemme	SKJ - 2.5D	SMS Technology	91.251.102	1	/9.4
-DM1	Usměrňovací můstek - 6A,100V Rectifier bridge - 6A, 100V Brückengleichrichter - 6A, 100V	KBU6B	SOS Electronic, spol. s r.o.	91.280.019	1	/6.7
-SB2	Hlavice tlačítka zelená Head green button Head green button	ZB5AA3	TELEMECANIQUE	91.060.014	1	/7.5
-SB3	Hlavice tlačítka černá Button black head Taste Mitesser	ZB5AA2	TELEMECANIQUE	91.060.013	1	/7.6
-SB4	Hlavice prosvětleného tlačítka modrá The button head backlit blue Der Knopfkopf blau hinterleuchtet	ZBAW36	TELEMECANIQUE	91.060.062	1	/8.7
-SB5	Hlavice tlačítka černá Button black head Taste Mitesser	ZB5AA2	TELEMECANIQUE	91.060.013	1	/7.2
-RCF0	Vstupní odrušovací filtr 10A Inout noise filter 10A Eingangsrauschfilter 10A	10EB15/50/CF15	WIDECOM TECHNOLOGY s.r.o.	91.041.072	1	/6.2

The manufacturer reserves right to use an equivalent replacement device.

3.c

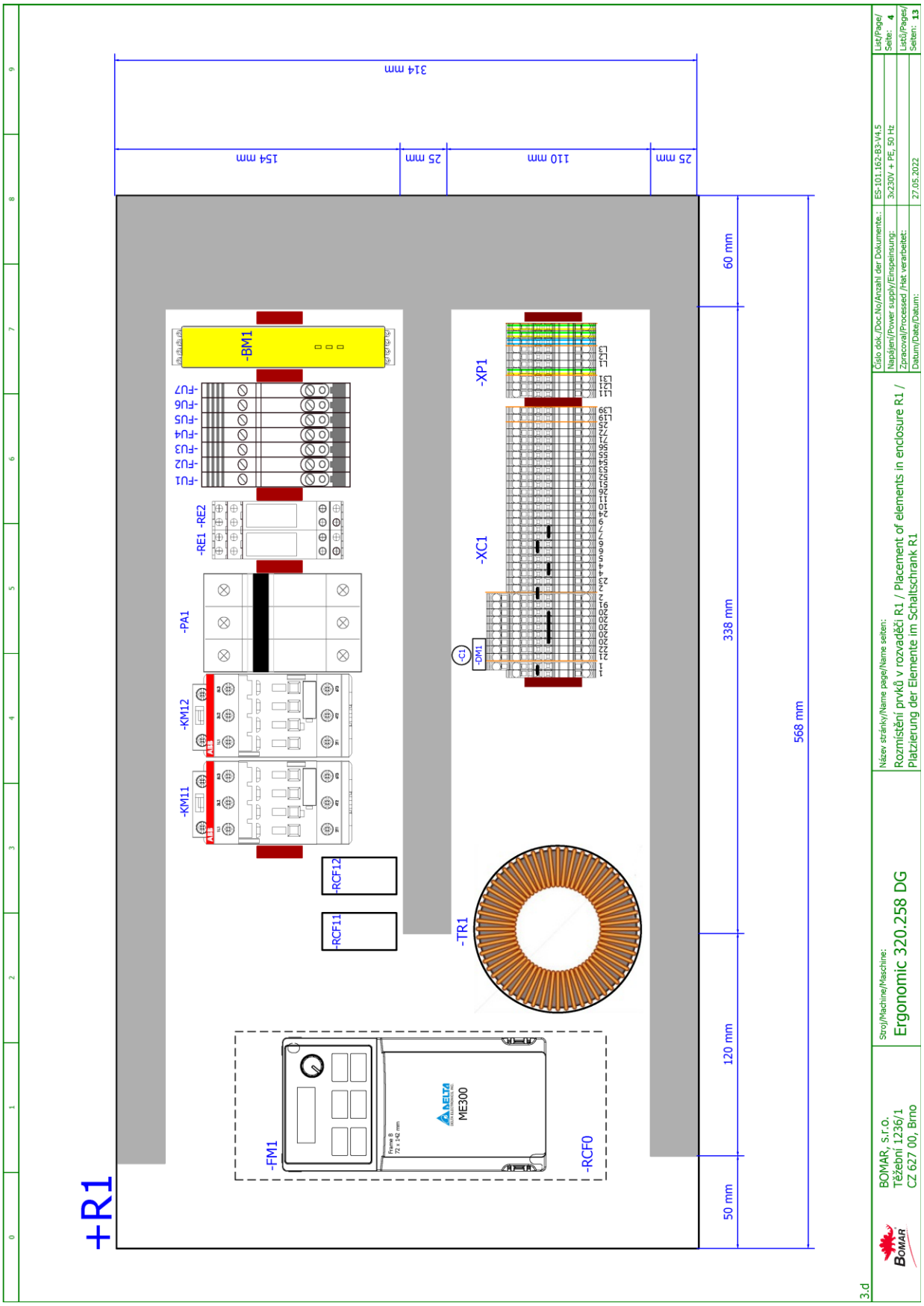
+R1
-FM1
Frame B
72 x 142 mm
DELTA
ELECTRONICS, INC.
ME300
-RCF0
-RCF11
-RCF12
-TR1
-KM11
-KM12
-PA1
-RE1 -RE2
-FU1
-FU2
-FU3
-FU4
-FU5
-FU6
-FU7
-BM1
-XC1
-XP1
-DM1
-C1
314 mm
154 mm
25 mm
110 mm
25 mm
60 mm
338 mm
568 mm
120 mm
50 mm
Číslo dok./Doc.No/Anzahl der Dokumente.: ES-101.162-B3-V4.5
Napájení/Power supply/Einspeinsung: 3x230V + PE, 50 Hz
Zpracoval/Processed /Hat verarbeitet:
Datum/Date/Datum: 27.05.2022
List/Page/ Seite: 4
Listů/Pages/ Seiten: 13
Název stránky/Name page/Name seiten:
Rozmístění prvků v rozvaděči R1 / Placement of elements in enclosure R1 / Platzierung der Elemente im Schaltschrank R1
Stroj/Machine/Maschine:
Ergonomic 320.258 DG
BOMAR, s.r.o.
Těžební 1236/1
CZ 627 00, Brno
3.d

+OP1

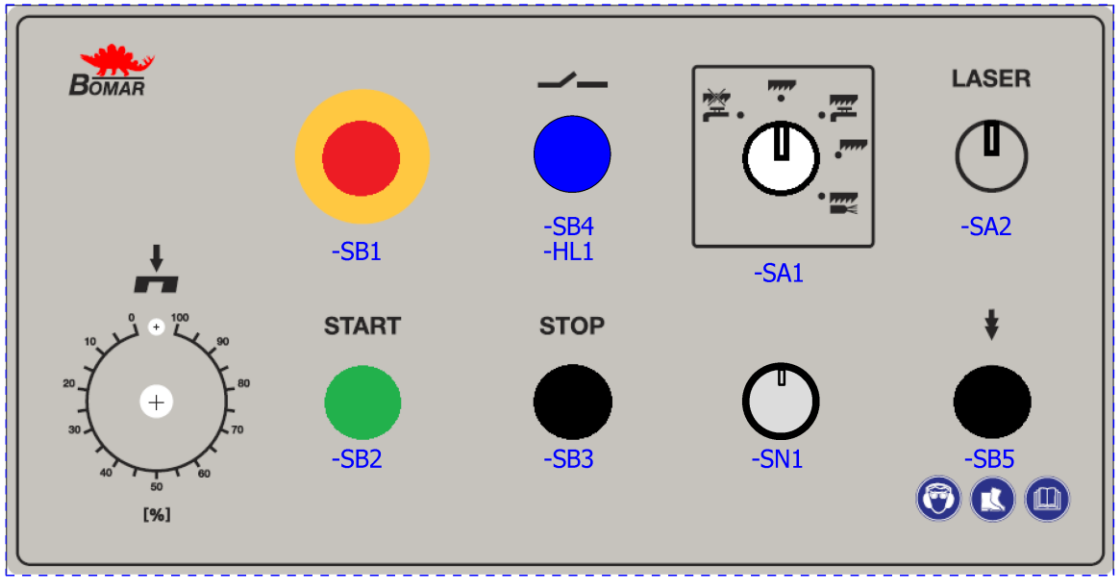

4

BOMAR, s.r.o. Těžební 1236/1 CZ 627 00, Brno	Stroj/Machine/Maschine: Ergonomic 320.258 DG	Název stránky/Name page/Name seiten: Rozmístění prvků v ovládacím panelu OP1 / Deployment of elements in control panel OP 1 / Einsatz der Elemente in dem Bedienfeld OP 1	Číslo dok./Doc.No/Anzahl der Dokumente.:	ES-101.162-B3-V4.5	List/Page/Seite: 5
			Napájení/Power supply/Einspeinsung:	3x230V + PE, 50 Hz	Listů/Pages/Seiten: 13
			Zpracoval/Processed /Hat verarbeitet:		
			Datum/Date/Datum:	25.08.2021	

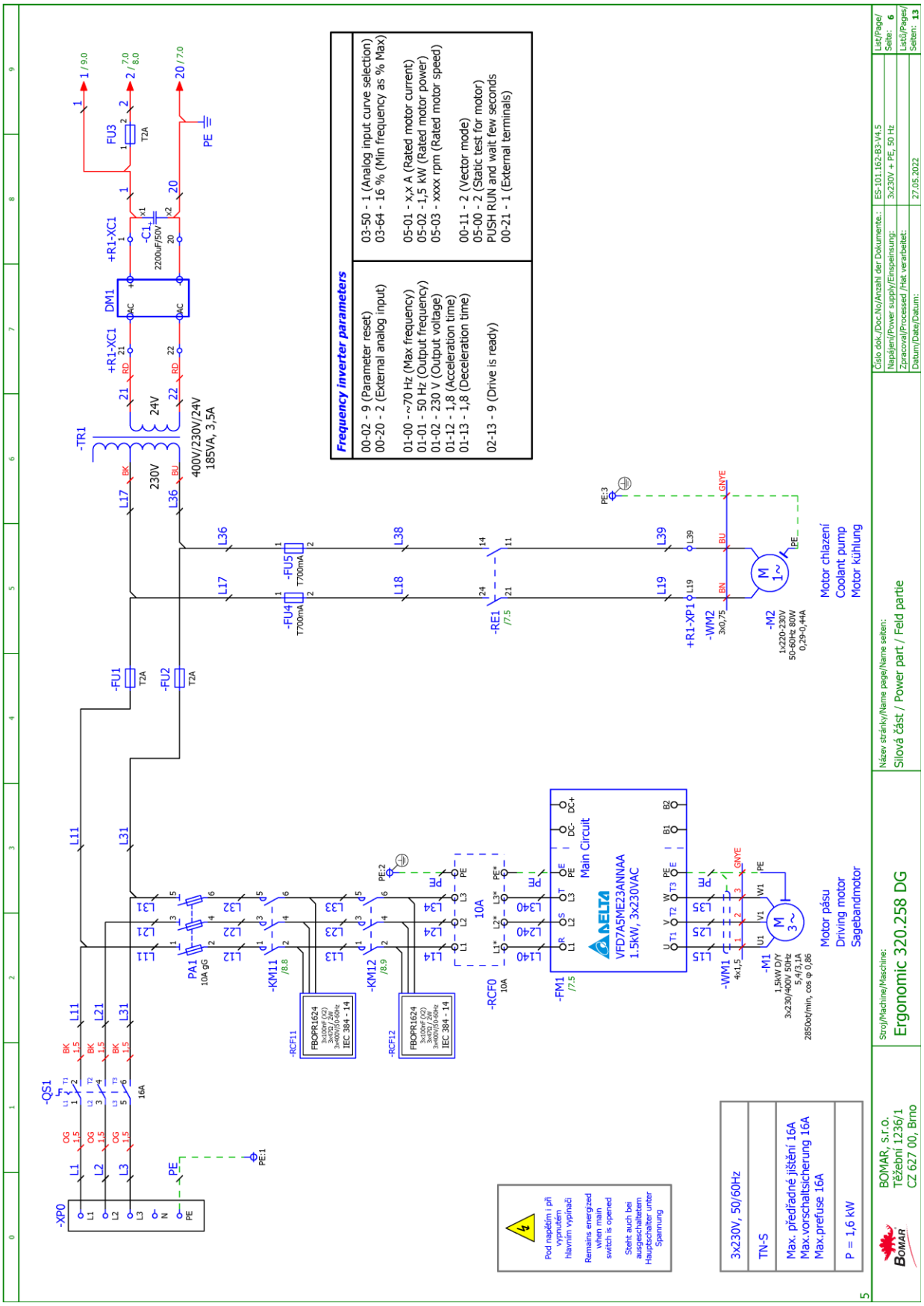
Frequency inverter parameters
00-02 - 9 (Parameter reset)
00-20 - 2 (External analog input)
01-00 - ~70 Hz (Max frequency)
01-01 - 50 Hz (Output frequency)
01-02 - 230 V (Output voltage)
01-12 - 1,8 (Acceleration time)
01-13 - 1,8 (Deceleration time)
02-13 - 9 (Drive is ready)
03-50 - 1 (Analog input curve selection)
03-64 - 16 % (Min frequency as % Max)
05-01 - x,x A (Rated motor current)
05-02 - 1,5 kW (Rated motor power)
05-03 - xxxx rpm (Rated motor speed)
00-11 - 2 (Vector mode)
05-00 - 2 (Static test for motor)
PUSH RUN and wait few seconds
00-21 - 1 (External terminals)
-TR1
400V/230V/24V
185VA, 3,5A
230V
24V
DM1
+R1-XC1
-C1
2200uF/50V
FU3
T2A
-FU1
-FU2
-FU4
-FU5
T700mA
-QS1
16A
-XP0
PA1
10A gG
-KM11
-KM12
-RCF11
-RCF12
FBOPR1624
IEC 384 - 14
-RCF0
10A
-FM1
DELTA
VFD7A5ME23ANNAA
1.5kW, 3x230VAC
Main Circuit
-RE1
+R1-XP1
-WM2
3x0,75
-M2
1x220-230V
50-60Hz 80W
0,29-0,44A
Motor chlazení
Coolant pump
Motor kühlung
-WM1
4x1,5
-M1
1,5kW D/Y
3x230/400V 50Hz
5,4/3,1A
2850ot/min, cos φ 0,86
Motor pásu
Driving motor
Sagebandmotor
Pod napětím i při vypnutém hlavním vypínači
Remains energized when main switch is opened
Steht auch bei ausgeschaltetem Hauptschalter unter Spannung
3x230V, 50/60Hz
TN-S
Max. předřadné jištění 16A
Max.vorschaltsicherung 16A
Max.prefuse 16A
P = 1,6 kW
BOMAR, s.r.o.
Těžební 1236/1
CZ 627 00, Brno
Stroj/Machine/Maschine:
Ergonomic 320.258 DG
Název stránky/Name page/Name seiten:
Silová část / Power part / Feld partie
Číslo dok./Doc.No/Anzahl der Dokumente.:
ES-101.162-B3-V4.5
Napájení/Power supply/Einspeinsung:
3x230V + PE, 50 Hz
Zpracoval/Processed /Hat verarbeitet:
Datum/Date/Datum:
27.05.2022
List/Page/
Seite: 6
Listů/Pages/
Seiten: 13

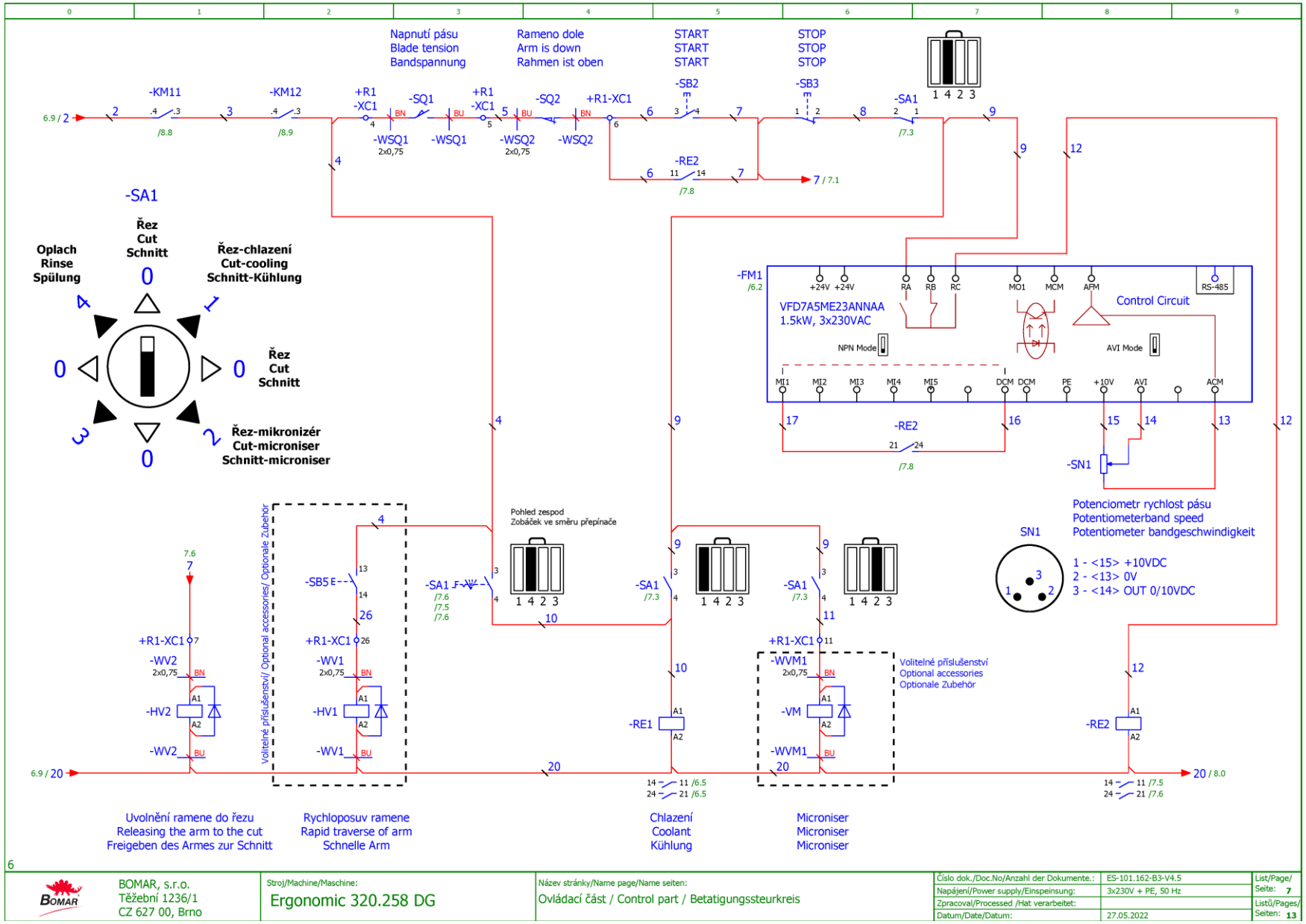
Napnutí pásu
Blade tension
Bandspannung
Rameno dole
Arm is down
Rahmen ist oben
START
START
START
STOP
STOP
STOP
-KM11
-KM12
+R1
-XC1
-SQ1
-SQ2
+R1-XC1
-SB2
-SB3
-SA1
-WSQ1
-WSQ2
-RE2
-SA1
Řez
Cut
Schnitt
Oplach
Rinse
Spülung
Řez-chlazení
Cut-cooling
Schnitt-Kühlung
Řez
Cut
Schnitt
Řez-mikronizér
Cut-microniser
Schnitt-microniser
-FM1
VFD7A5ME23ANNAA
1.5kW, 3x230VAC
Control Circuit
NPN Mode
AVI Mode
RS-485
-SN1
Potenciometr rychlost pásu
Potentiometerband speed
Potentiometer bandgeschwindigkeit
SN1
1 - <15> +10VDC
2 - <13> 0V
3 - <14> OUT 0/10VDC
Pohled zespod
Zobáček ve směru přepínače
Volitelné příslušenství / Optional accessories / Optionale Zubehör
-SB5
-WV2
-HV2
-WV1
-HV1
-WVM1
-VM
-RE1
Volitelné příslušenství
Optional accessories
Optionale Zubehör
Uvolnění ramene do řezu
Releasing the arm to the cut
Freigeben des Armes zur Schnitt
Rychloposuv ramene
Rapid traverse of arm
Schnelle Arm
Chlazení
Coolant
Kühlung
Microniser
Microniser
Microniser
BOMAR, s.r.o.
Těžební 1236/1
CZ 627 00, Brno
Stroj/Machine/Maschine:
Ergonomic 320.258 DG
Název stránky/Name page/Name seiten:
Ovládací část / Control part / Betatigungssteurkreis
Číslo dok./Doc.No/Anzahl der Dokumente.: ES-101.162-B3-V4.5
Napájení/Power supply/Einspeinsung: 3x230V + PE, 50 Hz
Zpracoval/Processed /Hat verarbeitet:
Datum/Date/Datum: 27.05.2022
List/Page/Seite: 7
Listů/Pages/Seiten: 13

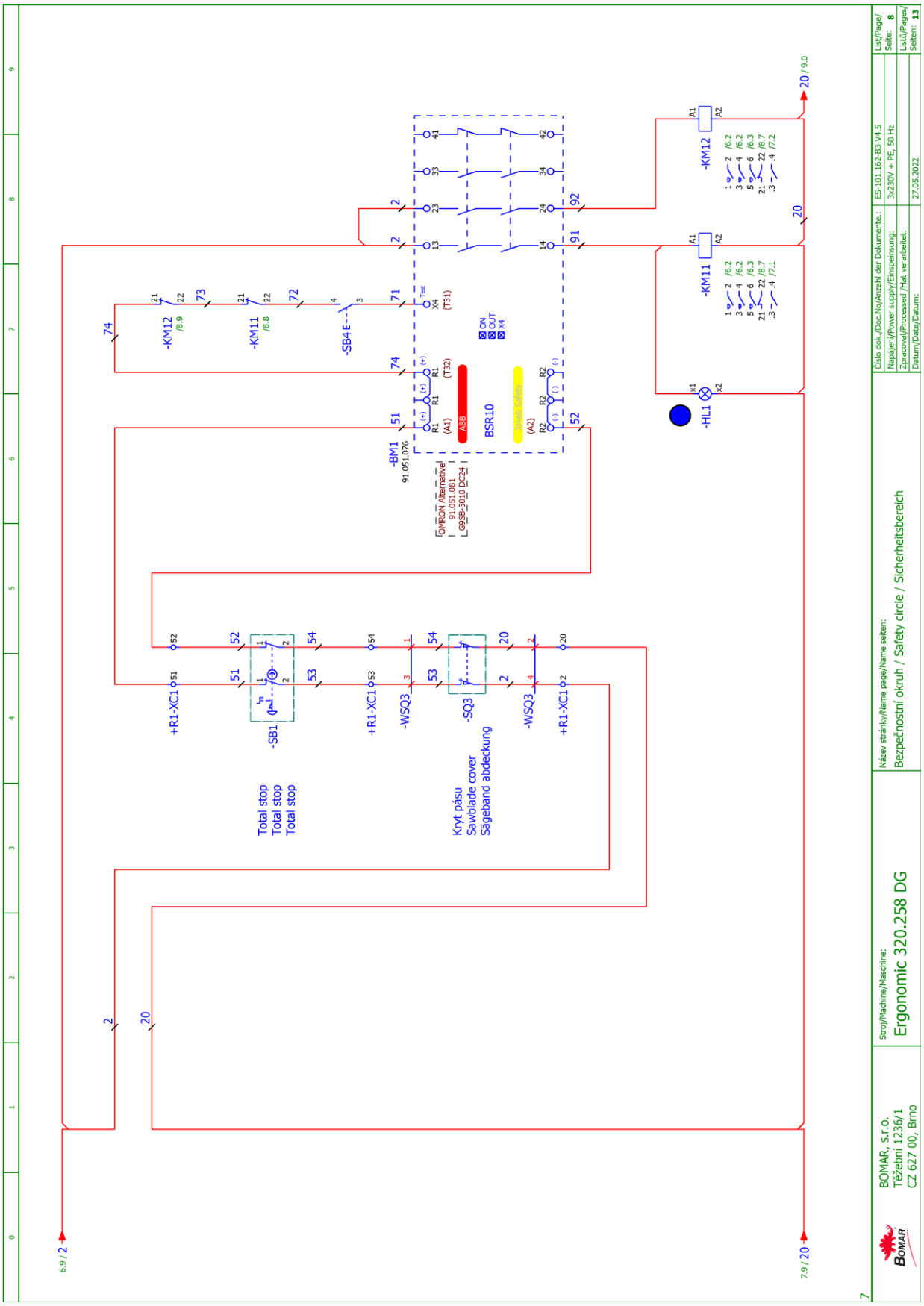
-KM12
/8.9
-KM11
/8.8
-SB4 E
-BM1
91.051.076
OMRON Alternative
91.051.081
G9SB-3010 DC24
BSR10
ABB
-KM12
-KM11
-HL1
+R1-XC1
-SB1
-WSQ3
-SQ3
Total stop
Total stop
Total stop
Kryt pásu
Sawblade cover
Sägeband abdeckung
6.9 / 2
7.9 / 20
20 / 9.0
Číslo dok./Doc.No/Anzahl der Dokumente.: ES-101.162-B3-V4.5
Napájení/Power supply/Einspeinsung: 3x230V + PE, 50 Hz
Zpracoval/Processed /Hat verarbeitet:
Datum/Date/Datum: 27.05.2022
List/Page/ Seite: 8
Listů/Pages/ Seiten: 13
Název stránky/Name page/Name seiten:
Bezpečnostní okruh / Safety circle / Sicherheitsbereich
Stroj/Machine/Maschine:
Ergonomic 320.258 DG
BOMAR, s.r.o.
Těžební 1236/1
CZ 627 00, Brno

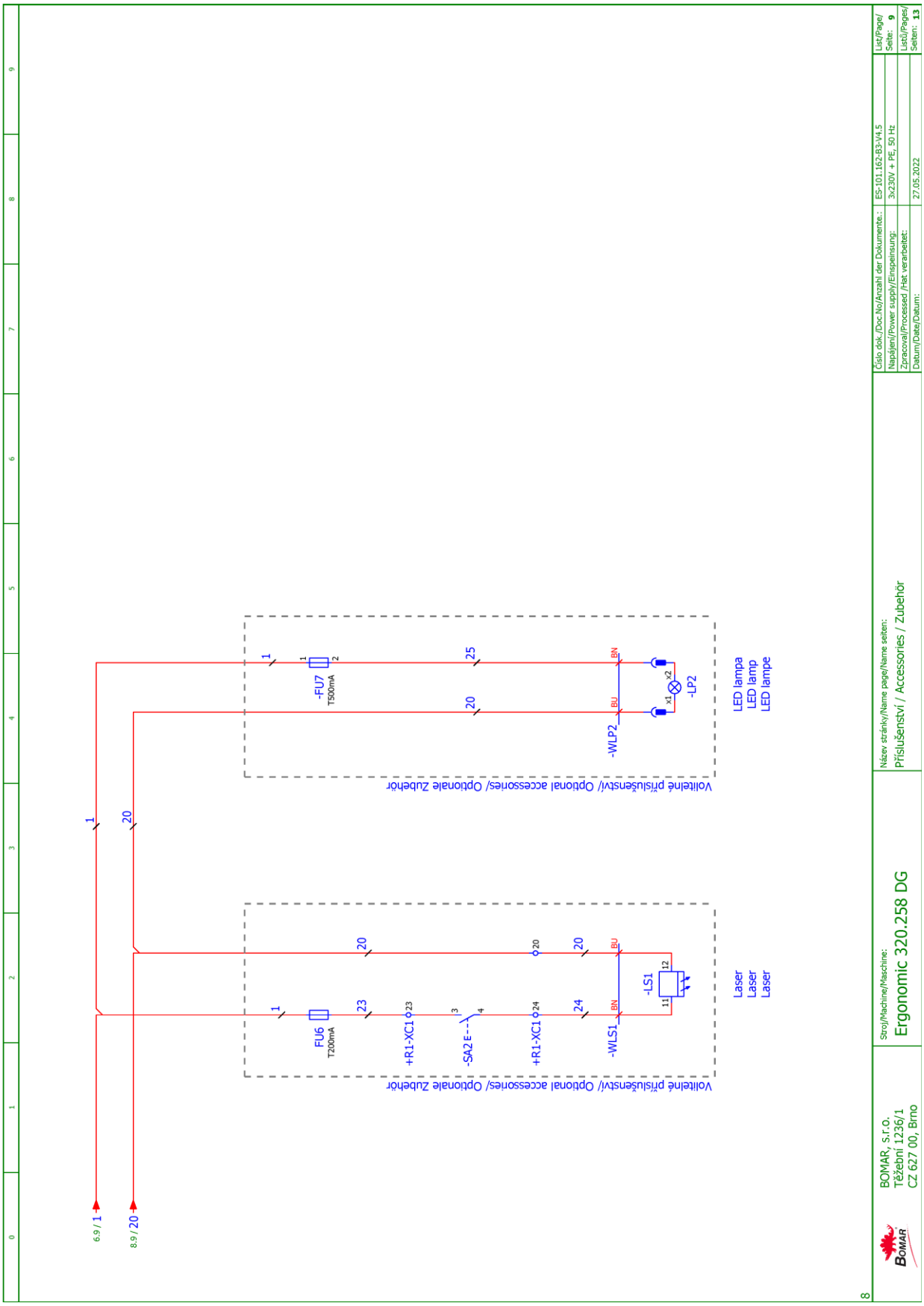
6.9 / 1
8.9 / 20
1
20
Volitelné příslušenství/ Optional accessories/ Optional Zubehör
FU6
T200mA
+R1-XC1
-SA2 E
+R1-XC1
-WLS1
-LS1
Laser
Laser
Laser
Volitelné příslušenství/ Optional accessories/ Optional Zubehör
-FU7
T500mA
-WLP2
-LP2
LED lampa
LED lamp
LED lampe
Stroj/Machine/Maschine:
Ergonomic 320.258 DG
Název stránky/Name page/Name seiten:
Příslušenství / Accessories / Zubehör
BOMAR, s.r.o.
Těžební 1236/1
CZ 627 00, Brno
Číslo dok./Doc.No/Anzahl der Dokumente.:
ES-101.162-B3-V4.5
Napájení/Power supply/Einspeisung:
3x230V + PE, 50 Hz
Zpracoval/Processed /Hat verarbeitet:
Datum/Date/Datum:
27.05.2022
List/Page/
Seite: 9
Listů/Pages/
Seiten: 13

6.1.3. 3x230V+PE, 50/60Hz (T3)

Obsah / Table of contents / Inhalt

Strana Page Seite	Název strany Page name Seitenname	Datum Date Datum
/1	Úvodní strana / Start page / Startseite	27.05.2022
/2	Obsah / Table of contents / Inhaltsverzeichnis	27.05.2022
/3	Kusovník artiklů / Parts list / Artikelstückliste	27.05.2022
/3.a	Kusovník artiklů / Parts list / Artikelstückliste	27.05.2022
/3.b	Kusovník artiklů / Parts list / Artikelstückliste	27.05.2022
/3.c	Kusovník artiklů / Parts list / Artikelstückliste	27.05.2022
/3.d	Kusovník artiklů / Parts list / Artikelstückliste	27.05.2022
/4	Rozmístění prvků v rozvaděči R1 / Placement of elements in enclosure R1 / Platzierung der Elemente im Schaltschrank R1	27.05.2022
/5	Rozmístění prvků v ovládacím panelu OP1 / Deployment of elements in control panel OP 1 / Einsatz der Elemente in dem Bedienfeld OP 1	25.08.2021
/6	Silová část / Power part / Feld partie	27.05.2022
/7	Ovládací část / Control part / Betatigungssteurkreis	27.05.2022
/8	Bezpečnostní okruh / Safety circle / Sicherheitsbereich	27.05.2022
/9	Příslušenství / Accessories / Zubehör	27.05.2022

Kusovník artiklů / Parts list / Stückliste

Označení přístroje Device identification Geräteidentifikation	Typ přístroje Device description Gerätebeschreibung	Objednací číslo Type number Typennummer	Výrobce Manufacturer Hersteller	Skladové číslo Part number Lagernummer	Množství Quantity Menge	Umístění Location Stelle
-BM1	Bezpečnostní relé 24VDC, 3NO/1NC Safety relay 24VDC, 3NO/1NC Sicherheitsrelais 24VDC, 3NO/1NC	ABB.2TLA010040R0000	ABB	91.051.076	1	/8.6
-FU3	Pojistka trubičková - 2A/250V, pomalá, 5x20 Tube fuse - 2A/250V, slow, 5x20 Rohrsicherung - 2A / 250V, langsam, 5x20	T2A/250V	ESKA	91.230.001	1	/6.9
-FU7	Pojistka trubičková - 500mA/250V, pomalá, 5x20 Tube fuse - 500mA/250V, slow, 5x20 Rohrsicherung - 500 mA / 250 V, langsam, 5x20	T500mA/250V	ESKA	91.230.011	1	/9.4
-SN1	Potenciometr 4k7 Potenciometer 4k7 Potentiometer 4k7	TP195 4k7/N20A	Elektronické součástky CZ, a.s	91.283.015	1	/7.8
-HV1	Ventilový konektor, LED Valve Plug, LED Ventilanschluss, LED	VCAFA0322-LED	Finecables Co.,Ltd.	93.017.077	1	/7.2
-HV2	Ventilový konektor, LED Valve Plug, LED Ventilanschluss, LED	VCAFA0322-LED	Finecables Co.,Ltd.	93.017.077	1	/7.1
-SN1	Hlavice potenciometru - 24mm Head of potentiometer 24mm Leiter Potentiometer 24mm	S8877 BLK	GES-ELECTRONICS, a.s.	91.060.063	1	/7.8
-C1	Kondenzátor Condenser Kondensator	2200uF/50V	GM Electronic s.r.o.	91.282.063	1	/6.8
-RCF11	Filtr RFC vývodový Efferent RFC filter Ableitenden RFC Filter	FBOPR1624	Ing. Miroslav Vlček	91.041.015	1	/6.1
-RCF12	Filtr RFC vývodový Efferent RFC filter Ableitenden RFC Filter	FBOPR1624	Ing. Miroslav Vlček	91.041.015	1	/6.1
-+OP1	Nálepka ovládacího panelu Sticker control panel Aufkleber Bedienfeld	31.0513-404	Ing. Vrána	31.0513-404	1	/5.1
-FU4	Svorka pojistková Fuse terminal Sicherungsklemme	WK4/THSi5U	WIELAND	91.251.102	1	/6.5

The manufacturer reserves right to use an equivalent replacement device.

2

BOMAR, s.r.o. Těžební 1236/1 CZ 627 00, Brno	Stroj/Machine/Maschine: Ergonomic 320.258 DG	Název stránky/Name page/Name seiten: Kusovník artiklů / Parts list / Artikelstückliste	Číslo dok./Doc.No/Anzahl der Dokumente.: ES-101.162-T3-V4.5 Napájení/Power supply/Einspeinsung: 3x230V + PE, 50/60 Hz Zpracoval/Processed /Hat verarbeitet: Datum/Date/Datum: 27.05.2022	List/Page/Seite: 3 Listů/Pages/Seiten: 13

Kusovník artiklů / Parts list / Stückliste

Označení přístroje Device identification Geräteidentifikation	Typ přístroje Device description Gerätebeschreibung	Objednací číslo Type number Typennummer	Výrobce Manufacturer Hersteller	Skladové číslo Part number Lagernummer	Množství Quantity Menge	Umístění Location Stelle
-FU4	Pojistka trubičková - 700mA/250V, pomalá, 5x20 Tube fuse - 700mA/250V, slow, 5x20 Rohrsicherung - 700mA / 250V, langsam, 5x20	T700mA/250V	ESKA	91.230.069	1	/6.5
-FU5	Svorka pojistková Fuse terminal Sicherungsklemme	WK4/THSi5U	WIELAND	91.251.102	1	/6.5
-FU5	Pojistka trubičková - 700mA/250V, pomalá, 5x20 Tube fuse - 700mA/250V, slow, 5x20 Rohrsicherung - 700mA / 250V, langsam, 5x20	T700mA/250V	ESKA	91.230.069	1	/6.5
-FU6	Pojistka trubičková - 200mA/250V, pomalá, 5x20 Tube fuse - 200mA/250V, slow, 5x20 Rohrsicherung - 160mA / 250V, langsam, 5x20	T200mA/250V	ESKA	91.230.037	1	/9.2
-KM11	Stykač - 4kW/400V, 3P Contactor - 4kW/400V, 3P Schütz - 4 kW / 400V, 3P	AF09-30-01-11	ABB	91.040.047	1	/8.8
-KM11	Pomocný kontakt - 1xNO Auxiliary contact - 1xNO Hilfskontakt - 1xNO	CA4-10	ABB	91.041.044	1	/8.8
-KM12	Stykač - 4kW/400V, 3P Contactor - 4kW/400V, 3P Schütz - 4 kW / 400V, 3P	AF09-30-01-11	ABB	91.040.047	1	/8.9
-KM12	Pomocný kontakt - 1xNO Auxiliary contact - 1xNO Hilfskontakt - 1xNO	CA4-10	ABB	91.041.044	1	/8.9
-QS1	3 pólový odpínač, 16A Disconnector - 3P, 16A Trennschalter - 3P, 16A	OT16FT3	ABB	91.170.018	1	/6.1
-QS1	Kryt svorek Terminal shroud Klemmenabdeckung	OTS40T3	ABB	91.170.017	1	/6.1
-QS1	Rukojeť odpínače - černá Handle switch - black Griffschalter - schwarz	OHBS3RH	ABB	91.180.016	1	/6.1
-RE1	Patice pro relé Relay socket Relaissockel	CR-PSS	ABB	91.051.048	1	/7.5

The manufacturer reserves right to use an equivalent replacement device.

3

Kusovník artiklů / Parts list / Stückliste

Označení přístroje Device identification Geräteidentifikation	Typ přístroje Device description Gerätebeschreibung	Objednací číslo Type number Typennummer	Výrobce Manufacturer Hersteller	Skladové číslo Part number Lagernummer	Množství Quantity Menge	Umístění Location Stelle
-RE1	Paticové relé CR-P Plug-in relay CR-P Stecken Sie in Relais CR-P	CR-P024DC2	ABB	91.051.049	1	/7.5
-RE2	Patice pro relé Relay socket Relaissockel	CR-PSS	ABB	91.051.048	1	/7.8
-RE2	Paticové relé CR-P Plug-in relay CR-P Stecken Sie in Relais CR-P	CR-P024DC2	ABB	91.051.049	1	/7.8
-SA1	Hlavice s otočným přepínačem - 4 polohy Head with rotary switch - 4 positions Kopf mit Drehschalter - 4 Positionen	M22 - WRK4	EATON	91.060.087	1	/7.3
-SA1	Upevňovací adaptér Mounting adapter Montageadapter	M22-A4	EATON	91.061.045	1	/7.3
-SA1	Kontaktní blok - 1NO Contact block - 1NO Kontaktblock - 1NO	M22-K10	EATON	91.061.022	2	/7.3
-SA1	Kontaktní blok - 1NC Contact block - 1NC Kontaktblock - 1NC	M22-K01	EATON	91.061.024	1	/7.3
-SB1	Total stop - hlavice + 2xNC Emergency-stop - button + 2xNC Not-Aus-Pilz - Taster + 2xNC	YW1B-V4E02R	IDEC	91.060.084	1	/8.4
-SN1	Svorka rychloupínací Fastconnect clamp Fast Connect Klemm	WAGO 224-112	WAGO	91.250.009	3	/7.8
-TR1	Toroidní transformátor - 400V/230V/20V 3,5A 185VA Toroidal transformer - 400V / 230V / 20V 3.5A 185 VA Ringkerntransformator - 400V / 230V / 20V 3.5A 185 VA	400V/230V/20V 3,5A 185VA	KARBAN s.r.o.	91.080.041	1	/6.6
-SQ3	Bezpečnostní koncový spínač - 2xNC Safety Limit Switch - 2x NC Sicherheitsendschalter - 2x NC	QKS8	KEDU	91.173.012	1	/8.4
-BM1	Bezpečnostní relé Safety relay Sicherheitsrelais	G9SB-3010 DC24	OMRON	91.051.081	1	/8.6

The manufacturer reserves right to use an equivalent replacement device.

3.a

Kusovník artiklů / Parts list / Stückliste

Označení přístroje Device identification Geräteidentifikation	Typ přístroje Device description Gerätebeschreibung	Objednací číslo Type number Typennummer	Výrobce Manufacturer Hersteller	Skladové číslo Part number Lagernummer	Množství Quantity Menge	Umístění Location Stelle
-SQ1	Koncový spínač - 1NC+1NO Limit switch - 1NC+1NO Endschalter - 1NC+1NO	D4N-4A31	OMRON	91.173.007	1	/7.3
-SQ2	Koncový spínač - 1NC+1NO Limit switch - 1NC+1NO Endschalter - 1NC+1NO	D4N-4A31	OMRON	91.173.007	1	/7.4
-FM1	Frekvenční měnič - 1.5kW, 3x230VAC Frequency converter - 1.5kW, 3x230VAC Frequenzumrichter - 1.5kW, 3x230VAC	VFD7A5ME23ANNAA	DELTA ELECTRONICS, INC.	91.012.195	1	/7.5
-M2	Čerpadlo chlazení 80W Cooling pump 80W Kühlpumpe 80W	PA70-M	SAP srl	91.020.035	1	/6.5
-FU3	Svorka pojistková Fuse terminal Sicherungsklemme	SKJ - 2.5D	SMS Technology	91.251.102	1	/6.9
-FU6	Svorka pojistková Fuse terminal Sicherungsklemme	SKJ - 2.5D	SMS Technology	91.251.102	1	/9.2
-FU7	Svorka pojistková Fuse terminal Sicherungsklemme	SKJ - 2.5D	SMS Technology	91.251.102	1	/9.4
-DM1	Usměrňovací můstek - 6A,100V Rectifier bridge - 6A, 100V Brückengleichrichter - 6A, 100V	KBU6B	SOS Electronic, spol. s r.o.	91.280.019	1	/6.7
-PA1	Pojistka válcová - 10A, 10x38, CC Tube fuse - 10A, 10x38, CC Rohrsicherung - 10A, 10x38, CC	PRO-FER-ATDR10	Mersen	91.230.080	1	/6.2
-PA1	Pojistkový odpojovač - 3P CC Fuse disconnector - 3P CC Sicherungstrenner - 3P CC	PRO-FER-USCC3	Mersen	91.241.022	1	/6.2
-PA2	Pojistka válcová - 2A, 10x38, CC Tube fuse - 2A, 10x38, CC Rohrsicherung - 2A, 10x38, CC	PRO-FER-ATDR2	Mersen	91.230.079	2	/6.5
-PA2	Pojistkový odpojovač - 2P CC Fuse disconnector - 2P CC Sicherungstrenner - 2P CC	PRO-FER-USCC2	Mersen	91.241.021	1	/6.5

The manufacturer reserves right to use an equivalent replacement device.

3.b

Kusovník artiklů / Parts list / Stückliste

Označení přístroje Device identification Geräteidentifikation	Typ přístroje Device description Gerätebeschreibung	Objednací číslo Type number Typennummer	Výrobce Manufacturer Hersteller	Skladové číslo Part number Lagernummer	Množství Quantity Menge	Umístění Location Stelle
-SB2	Hlavice tlačítka zelená Head green button Head green button	ZB5AA3	TELEMECANIQUE	91.060.014	1	/7.5
-SB3	Hlavice tlačítka černá Button black head Taste Mitesser	ZB5AA2	TELEMECANIQUE	91.060.013	1	/7.6
-SB4	Hlavice prosvětleného tlačítka modrá The button head backlit blue Der Knopfkopf blau hinterleuchtet	ZBAW36	TELEMECANIQUE	91.060.062	1	/8.7
-SB5	Hlavice tlačítka černá Button black head Taste Mitesser	ZB5AA2	TELEMECANIQUE	91.060.013	1	/7.2
-RCF0	Vstupní odrušovací filtr 10A Inout noise filter 10A Eingangsrauschfilter 10A	10EB15/50/CF15	WIDECOM TECHNOLOGY s.r.o.	91.041.072	1	/6.2

The manufacturer reserves right to use an equivalent replacement device.

3.c

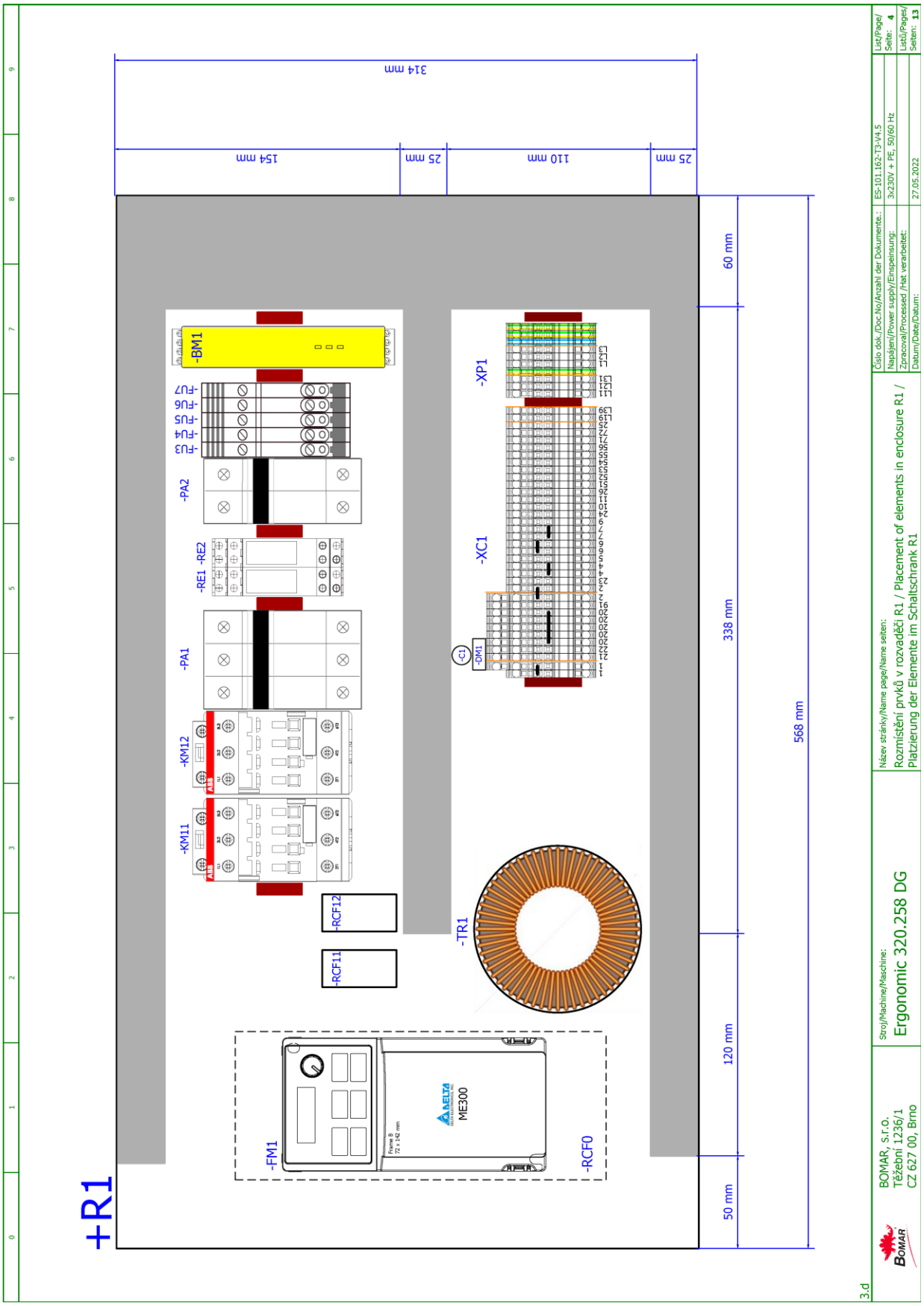
+R1
-FM1
-RCF0
ME300
-RCF11
-RCF12
-TR1
-KM11
-KM12
-PA1
-RE1
-RE2
-PA2
-FU3
-FU4
-FU5
-FU6
-FU7
-BM1
-XC1
-XP1
-DM1
-C1
314 mm
154 mm
25 mm
110 mm
25 mm
60 mm
338 mm
568 mm
120 mm
50 mm
BOMAR, s.r.o.
Těžební 1236/1
CZ 627 00, Brno
Stroj/Machine/Maschine:
Ergonomic 320.258 DG
Název stránky/Name page/Name seiten:
Rozmístění prvků v rozvaděči R1 / Placement of elements in enclosure R1 /
Platzierung der Elemente im Schaltschrank R1
Číslo dok./Doc.No/Anzahl der Dokumente.:
ES-101.162-T3-V4.5
Napájení/Power supply/Einspeinsung:
3x230V + PE, 50/60 Hz
Zpracoval/Processed /Hat verarbeitet:
Datum/Date/Datum:
27.05.2022
List/Page/
Seite: 4
Listů/Pages/
Seiten: 13
3.d

+OP1

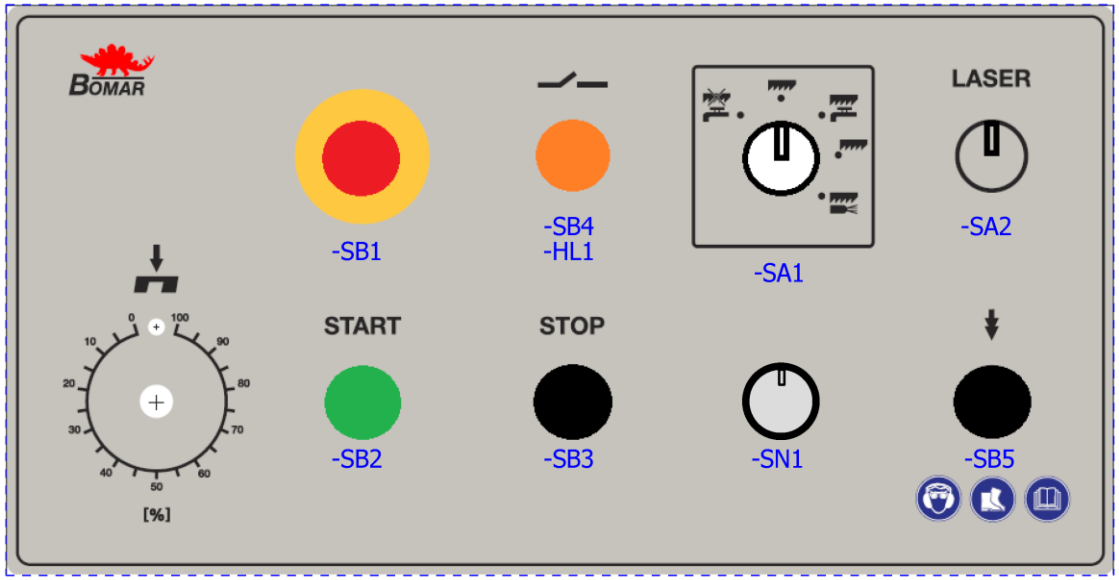

4

BOMAR, s.r.o. Těžební 1236/1 CZ 627 00, Brno	Stroj/Machine/Maschine: Ergonomic 320.258 DG	Název stránky/Name page/Name seiten: Rozmístění prvků v ovládacím panelu OP1 / Deployment of elements in control panel OP 1 / Einsatz der Elemente in dem Bedienfeld OP 1	Číslo dok./Doc.No/Anzahl der Dokumente.: ES-101.162-T3-V4.5 Napájení/Power supply/Einspeinsung: 3x230V + PE, 50/60 Hz Zpracoval/Processed /Hat verarbeitet: Datum/Date/Datum: 25.08.2021	List/Page/Seite: 5 Listů/Pages/Seiten: 13

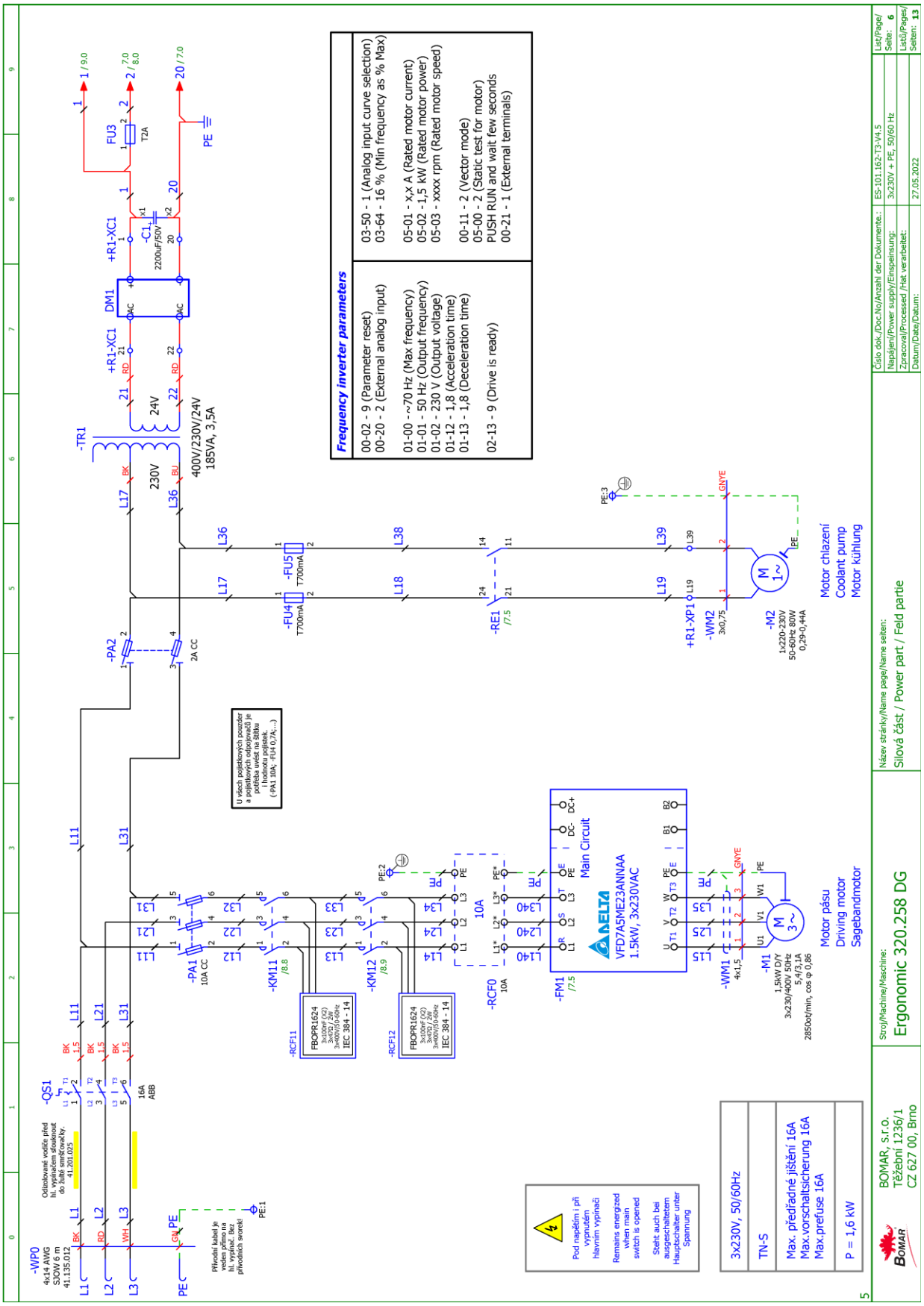
Frequency inverter parameters
00-02 - 9 (Parameter reset)
00-20 - 2 (External analog input)
01-00 - ~70 Hz (Max frequency)
01-01 - 50 Hz (Output frequency)
01-02 - 230 V (Output voltage)
01-12 - 1,8 (Acceleration time)
01-13 - 1,8 (Deceleration time)
02-13 - 9 (Drive is ready)
03-50 - 1 (Analog input curve selection)
03-64 - 16 % (Min frequency as % Max)
05-01 - x,x A (Rated motor current)
05-02 - 1,5 kW (Rated motor power)
05-03 - xxxx rpm (Rated motor speed)
00-11 - 2 (Vector mode)
05-00 - 2 (Static test for motor)
PUSH RUN and wait few seconds
00-21 - 1 (External terminals)
-WP0
4x14 AWG
SJOW 6 m
41.135.012
-QS1
16A
ABB
-TR1
400V/230V/24V
185VA, 3,5A
-PA1
10A CC
-PA2
2A CC
-KM11
-KM12
-RCF11
-RCF12
FBOPR1624
IEC 384 - 14
-RCF0
10A
-FM1
VFD7A5ME23ANNAA
1.5kW, 3x230VAC
Main Circuit
-M1
1,5kW D/Y
3x230/400V 50Hz
5,4/3,1A
2850ot/min, cos φ 0,86
Motor pásu
Driving motor
Sagebandmotor
-M2
1x220-230V
50-60Hz 80W
0,29-0,44A
Motor chlazení
Coolant pump
Motor kühlung
-WM1
-WM2
-FU4
-FU5
T700mA
-RE1
/7.5
+R1-XC1
DM1
-C1
2200uF/50V
FU3
T2A
PE
Pod napětím i při vypnutém hlavním vypínači
Remains energized when main switch is opened
Steht auch bei ausgeschaltetem Hauptschalter unter Spannung
3x230V, 50/60Hz
TN-S
Max. předřadné jištění 16A
Max.vorschaltsicherung 16A
Max.prefuse 16A
P = 1,6 kW
BOMAR, s.r.o.
Těžební 1236/1
CZ 627 00, Brno
Stroj/Machine/Maschine:
Ergonomic 320.258 DG
Název stránky/Name page/Name seiten:
Silová část / Power part / Feld partie
Číslo dok./Doc.No/Anzahl der Dokumente.:
ES-101.162-T3-V4.5
Napájení/Power supply/Einspeinsung:
3x230V + PE, 50/60 Hz
Zpracoval/Processed /Hat verarbeitet:
Datum/Date/Datum:
27.05.2022
List/Page/
Seite: 6
Listů/Pages/
Seiten: 13

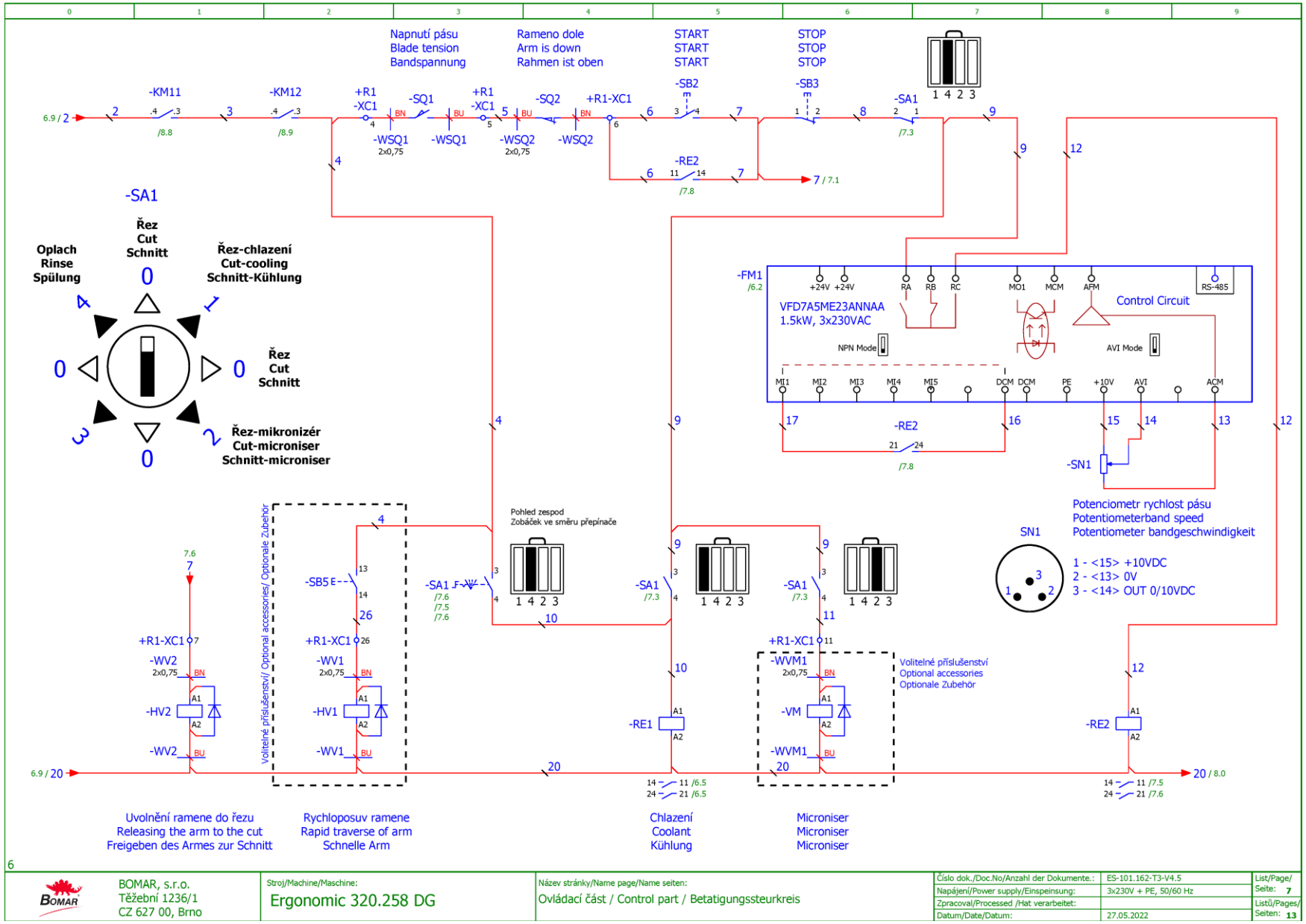

Schéma
Schemata
Schematics

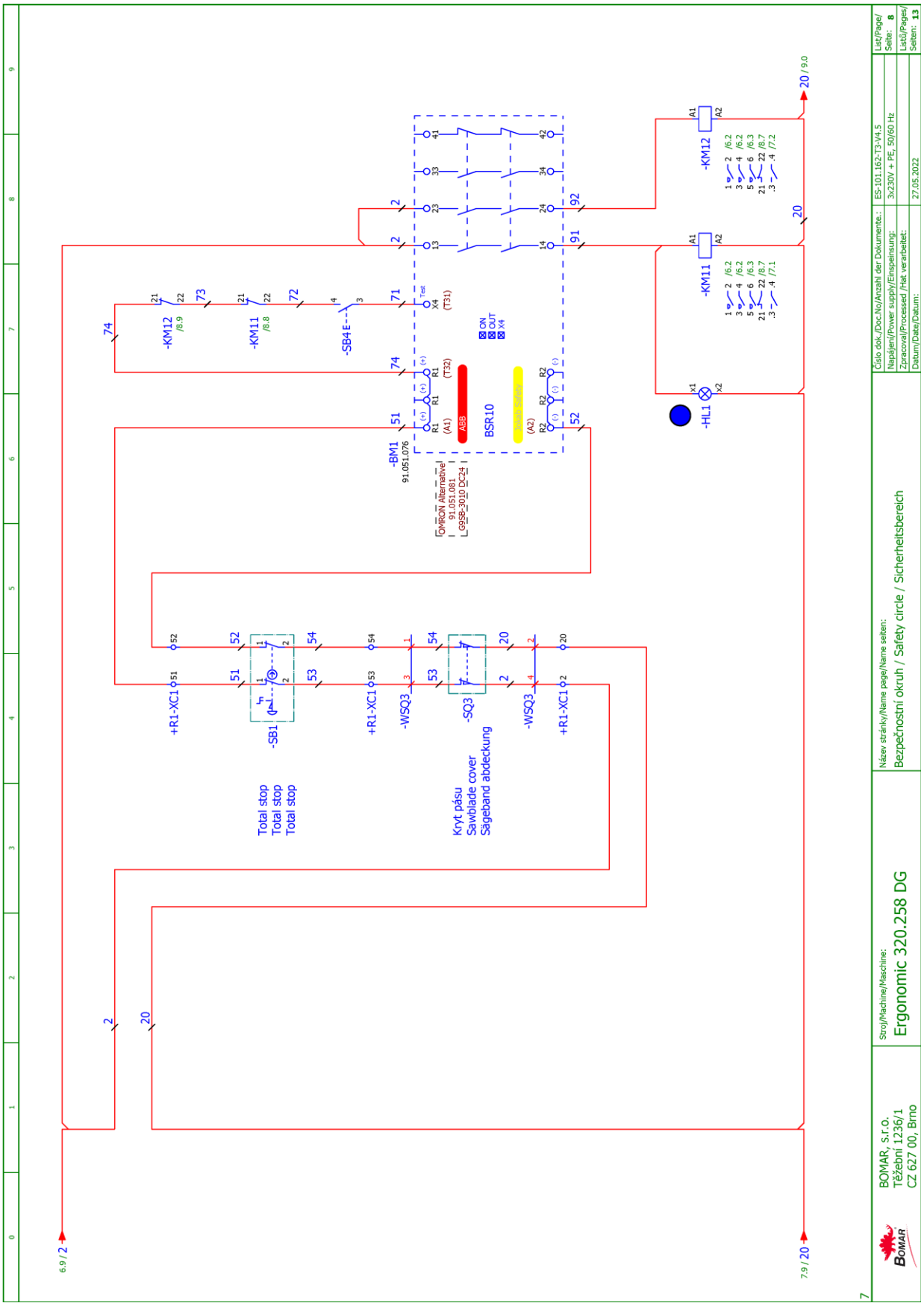
-KM12
/8.9
-KM11
/8.8
-SB4 E
-BM1
91.051.076
OMRON Alternative
91.051.081
G9SB-3010 DC24
BSR10
ABB
-KM12
-KM11
-HL1
+R1-XC1
-SB1
-WSQ3
-SQ3
Total stop
Total stop
Total stop
Kryt pásu
Sawblade cover
Sägeband abdeckung
6.9 / 2
7.9 / 20
20 / 9.0
Číslo dok./Doc.No/Anzahl der Dokumente.:
ES-101.162-T3-V4.5
Napájení/Power supply/Einspeisung:
3x230V + PE, 50/60 Hz
Zpracoval/Processed /Hat verarbeitet:
Datum/Date/Datum:
27.05.2022
List/Page/
Seite: 8
Listů/Pages/
Seiten: 13
Název stránky/Name page/Name seiten:
Bezpečnostní okruh / Safety circle / Sicherheitsbereich
Stroj/Machine/Maschine:
Ergonomic 320.258 DG
BOMAR, s.r.o.
Těžební 1236/1
CZ 627 00, Brno

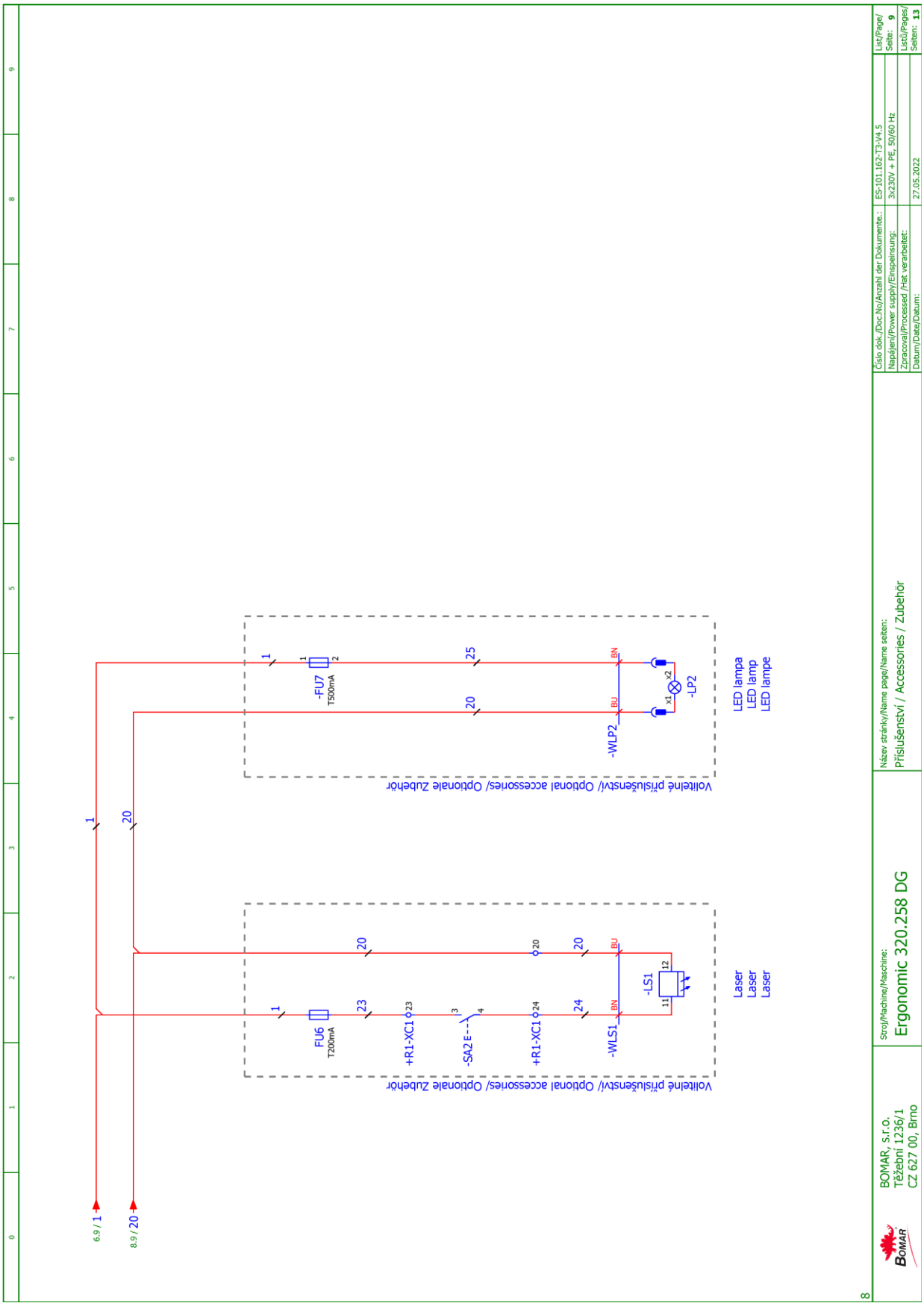
6.9 / 1
8.9 / 20
1
20
Volitelné příslušenství/ Optional accessories/ Optional Zubehör
FU6
T200mA
+R1-XC1
-SA2 E
+R1-XC1
-WLS1
-LS1
Laser
Laser
Laser
Volitelné příslušenství/ Optional accessories/ Optional Zubehör
-FU7
T500mA
-WLP2
-LP2
LED lampa
LED lamp
LED lampe
Stroj/Machine/Maschine:
Ergonomic 320.258 DG
Název stránky/Name page/Name seiten:
Příslušenství / Accessories / Zubehör
BOMAR, s.r.o.
Těžební 1236/1
CZ 627 00, Brno
Číslo dok./Doc.No/Anzahl der Dokumente.:
ES-101.162-T3-V4.5
Napájení/Power supply/Einspeisung:
3x230V + PE, 50/60 Hz
Zpracoval/Processed /Hat verarbeitet:
Datum/Date/Datum:
27.05.2022
List/Page/
Seite: 9
Listů/Pages/
Seiten: 13

6.2. Hydraulické schema / Hydraulisches Schéma / Hydraulic diagram

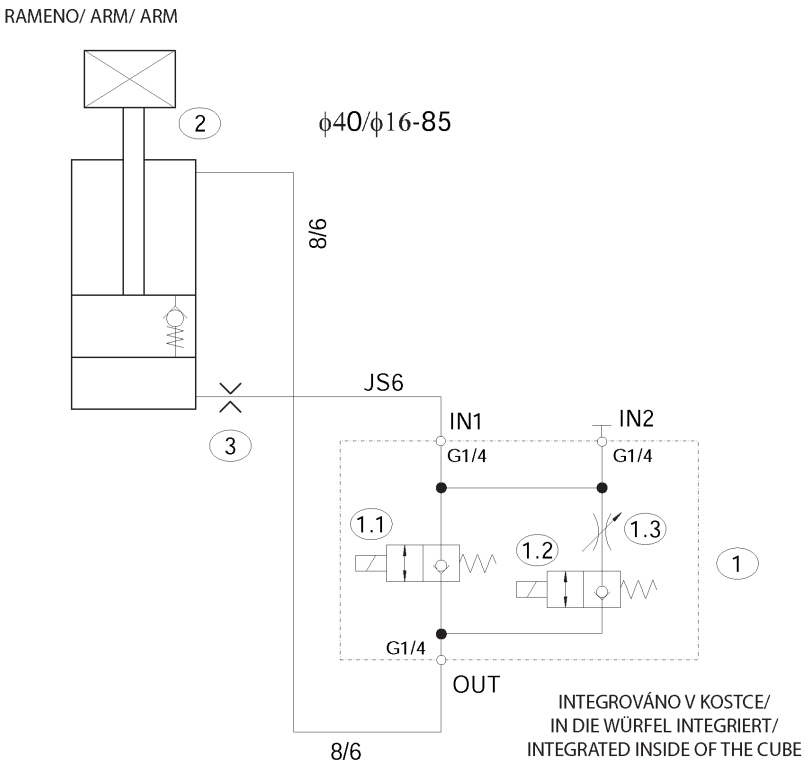

POHYB VZHŮRU MANUÁLNÍ, POHYB DOLŮ VYVOZEN TÍHOU RAMENE
(RAMENO ZAVĚŠENO NA KLOUBU S KOMPENZAČNÍMI PRUŽINAMI)/
BEWEGUNG AUFWÄRTS MANUELL, BEWEGUNG ABWÄRTS MIT DEM GEWICHT
DES ARMES GESHAFT (DAS ARM IST AN DEM GELENK MIT AUSGLEICHSFEDERN GEHÄNGT)
UPWARD MOVEMENT OF THE SAW ARM IS MANUAL, DOWNWARD MOVEMENT IS CAUSED
BY THE WEIGHT OF THE ARM (THE ARM IS HUNG ON A JOINT WITH COMPENSATING SPRINGS)

Elektrický proud procházející cívkami/
Der elektrische Strom, der durch den Spüllen fließt/
Electric current passing through the coils: 0,708 A

Typ / Type / Type	
Ergonomic 320.250 DGS, Ergonomic 275.230 DGS	
Neuvedené světlosti / Unerwähnt Lichtbreite / Unlisted inside diameters	
Hydraulická hadice/ Hydraulikschläuche/ Hydraulic hose	JS6
Pneumatická hadice/ Druckluftschlauch/ Pneumatic hose	8/6

Pmax (ventily/ ventilen/ valves 1.1, 1.2)	10 bar

Poz.	Název položky	Typ	Popis	Poznámka	ks
Pos.	Bezeichnung	Typ	Beschreibung	Hinweis	Menge
Pos.	Item	Type	Description	Note	Pcs.
1	Kostka ventilů / Ventilklotz / Valve cube	92.153.071		f.FMV	1
1.1	Rozvaděč / Schaltschrank / Switchboard	Sedlový / Sitzverteilerventil/ Saddle valve /	Totalstop	Ovlád. napětí / Steuerspannung / Control voltage 24V DC	1
1.2	Rozvaděč / Schaltschrank / Switchboard	Sedlový / Sitzverteilerventil/ Saddle valve	Rychloposuv/ Eilgang / Speed shift	Ovlád. napětí / Steuerspannung / Control voltage 24V DC	1
1.3	Škrtící ventil / Drosselventil / Throttle valve	Jehlový / Nadeldrosselventil/ Needle valve		Rozsah / Anwendungsbereich /Range 0 - 360° (0,1,2…..,7)	1
2	Zdvižný válec / Hubzylinder / Lift cylinder	201.ER257-010	Bomar	Přepouštěcí / Überlaufhubzylinder/ By pass cylinder	1
3	Clona / Schürze / Shield	30.0911-044	Bomar	1mm	1

Attention!

The saw arm must always be in the down position after finishing work and resting or during longer intervals between cuts or at night. Otherwise there is a risk of damage to the hydraulic part of the saw arm.

All material must be removed from the saw area. (Risk of damage to the saw blade)

7. Výkresy sestav pro objednání náhradních dílů / Zeichnungen für Bestellung der Ersatzteile / Drawing assemblies for spare parts order

- Při objednávání náhradních dílů vždy uvádějte: typ stroje (např. Ergonomic 320.258 DG) , výrobní číslo (např. 125) a rok výroby (např. 1999).

- In die Bestellung der Ersatzteile führen Sie immer an: Maschinentyp (z. B. Ergonomic 320.258 DG), Serien Nr. (z. B. 125) und Baujahr (z. B. 1999).

- For spare parts order, you must always to allege: type of machine (for example Ergonomic 320.258 DG), serial number (for example 125, see cover page) and year of construction (for example 1999).

7.1. Ergonomic 320.258 DG

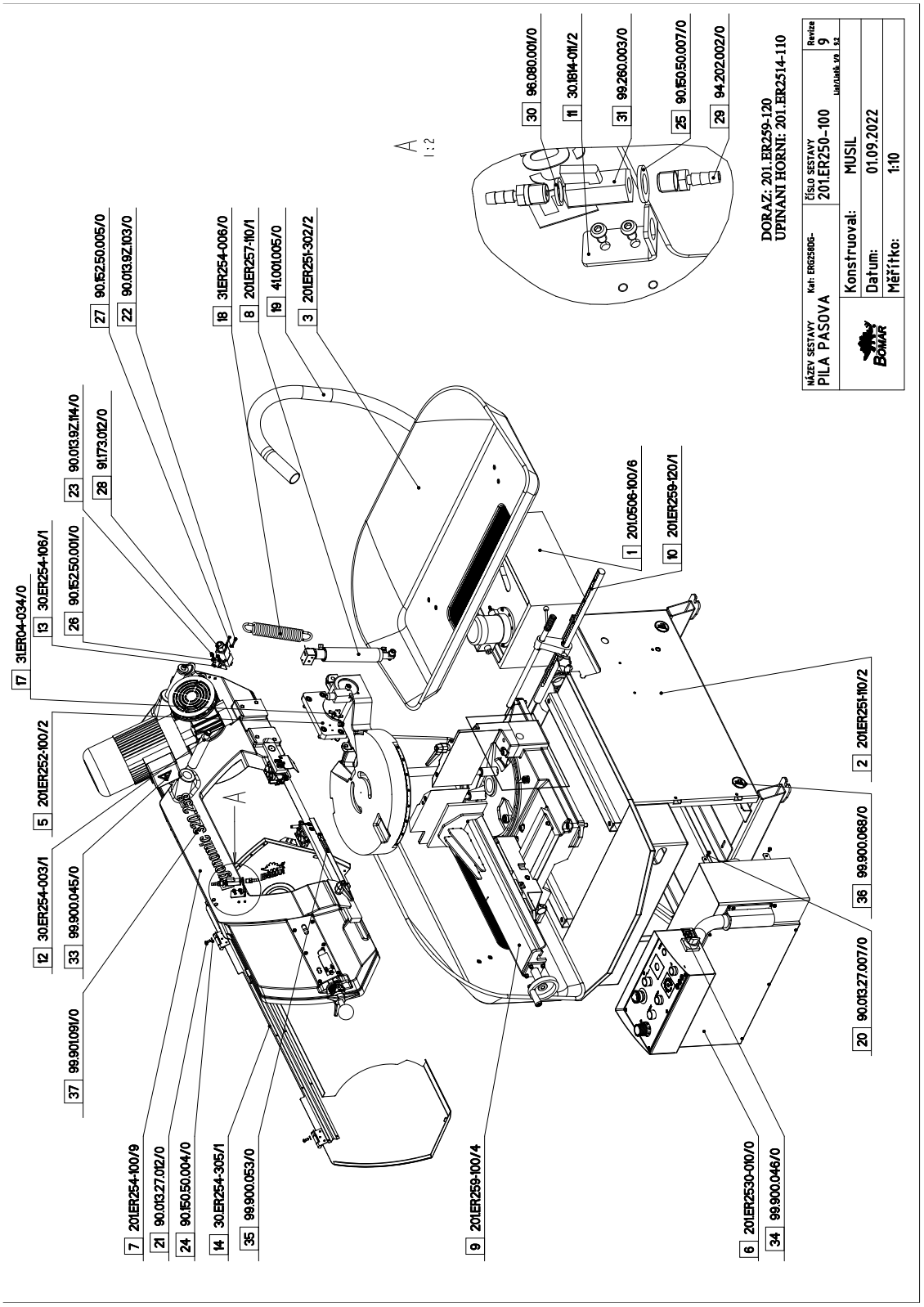

NAZEV SESTAVY	CISLO SESTAVY	REVIZE
PILA PASOVA	201.ER250-100	9

Poz.	Objednací číslo	Verze	Název CZ	Name EN	Name DE	Polotovar	Ks.
1	201.0506-100	6	CHLAZENI	COOLING	KÜHLUNG		1
2	201.ER251-110	2	PODSTAVEC	BASE	UNTERSATZ		1
3	201.ER251-302	2	VANA	TANK	WANNE		2
5	201.ER252-100	2	KONZOLA OTOCNA	PIVOT BRACKET	DREHKONSOLE		1
6	201.ER2530-010	0	ROZVADEC ELEKTRO	SWITCH CABINET	SCHALTSCHRANK		1
7	201.ER254-100	9	RAMENO	BEAM	RAHMEN		1
8	201.ER257-110	1	VALEC ZVEDACI	LIFTING CYLINDER	HEBEZYLINDER		1
9	201.ER259-100	4	STUL	TABLE	TISCH		1
10	201.ER259-120	1	DORAZ	STOP PIECE	ANSCHLAG		1
11	30.1814-011	2	DRZAK	HOLDER	HALTER	P3 - 76x25	1
12	30.ER254-003	1	CEP	PIVOT	BOLZEN	D30 - 163	1
13	30.ER254-106	1	DRZAK	HOLDER	HALTER	<Chybné parametry pro polotovar '40.001.01.04' typu 'P'>	1
14	30.ER254-305	1	KRYT RAMENE	ARM COVER	RAHMENABDECKUNG		1
15	30.ER299-001	0	STITEK TYPOVY	MACHINE LABEL	MASCHINE SCHILD		1
16	31.0599-005	0	STITEK	LABEL	SCHILD	pozor svěrák 40x35 mm	1
17	31.ER04-034	0	PODLOZKA	WASHER	UNTERLEGSCHEIBE	3D tisknutá podložka	1
18	31.ER254-006	0	PRUZINA	SPRING	FEDER	dle výkresu ER254-006	1
19	41.001.005	0	HADICE	HOSE	SCHLAUCH	PG36 černá PACL42 - EW-PA-M40/P36 S	1
20	90.013.27.007	0	SROUB PULKULATY	BUTTON HEAD SCREW	RUNDKOPFSCHRAUBE	6x10 ISO 7380 čern	6
21	90.013.27.012	0	SROUB PULKULATY	BUTTON HEAD SCREW	RUNDKOPFSCHRAUBE	6x14 ISO 7380 čern	2
22	90.013.9Z.103	0	SROUB PULKULATY	BUTTON HEAD SCREW	RUNDKOPFSCHRAUBE	4x25 ISO 7380 TX A2 BEZPEČNOSTNÍ S KOLÍČKEM	2
23	90.013.9Z.114	0	SROUB PULKULATY	BUTTON HEAD SCREW	RUNDKOPFSCHRAUBE	6x10 ISO 7380 TX A2 BEZPEČNOSTNÍ S KOLÍČKEM	2
24	90.150.50.004	0	PODLOZKA	WASHER	UNTERLEGSCHEIBE	6,4 M6 DIN 125 Zn	2
25	90.150.50.007	0	PODLOZKA	WASHER	UNTERLEGSCHEIBE	13 M12 DIN 125 Zn	1
26	90.152.50.001	0	PODLOZKA VEJIROVA	FAN WASHER	FÄCHERSCHEIBE	6,4 A DIN 6798 Zn	2
27	90.152.50.005	0	PODLOZKA VEJIROVA	FAN WASHER	FÄCHERSCHEIBE	4,3 A DIN 6798 Zn	2
28	91.173.012	0	SPINAC KONC.-ZAMEK	END SWITCH -LOCK	ENDSCHALTER - SCHLOSS	QKS8 2xNC, 250V/400V, 14A/8A, IP54	1
29	94.202.002	0	REDUKCE	REDUCTION / ADAPTOR	REDUKTION	1/4"-6 GES 6-R1/4"	2
30	96.080.001	0	KROUZEK TESNICI	SEALING RING	DICHTUNGSRING	17.8x13.5x4 17,8*13,5*4 taburen	1
31	99.260.003	0	VENTIL KULOVY	BALL VALVE	KUGELVENTIL	1/4" /// možno nahradit 99.260.004 vnitřní/vnitřní China	1
32	99.900.040	0	SAMOLEPKA	STICKER	AUFKLEBER	NR Nebezpečí říznutí	1
33	99.900.045	0	SAMOLEPKA	STICKER	AUFKLEBER	NE Nebezpečí úrazu el.pro velká 43 mm	2

Číslo Sestavy/Number of assembly/Nummer der Baugruppe; Ver.-Verze/Version/Version; Název sestavy/Assembly name/Name der Baugruppe;; Poz.-Pozice/Position/Position; Objednací číslo/Order number/Bestellnummer;
Polotovar/Semiproduct/Halbfabrikat; Vstupní materiál(Vstupní mat.)/Default material/Eingangsmaterial;

7.3. Ergonomic 320.258 DG

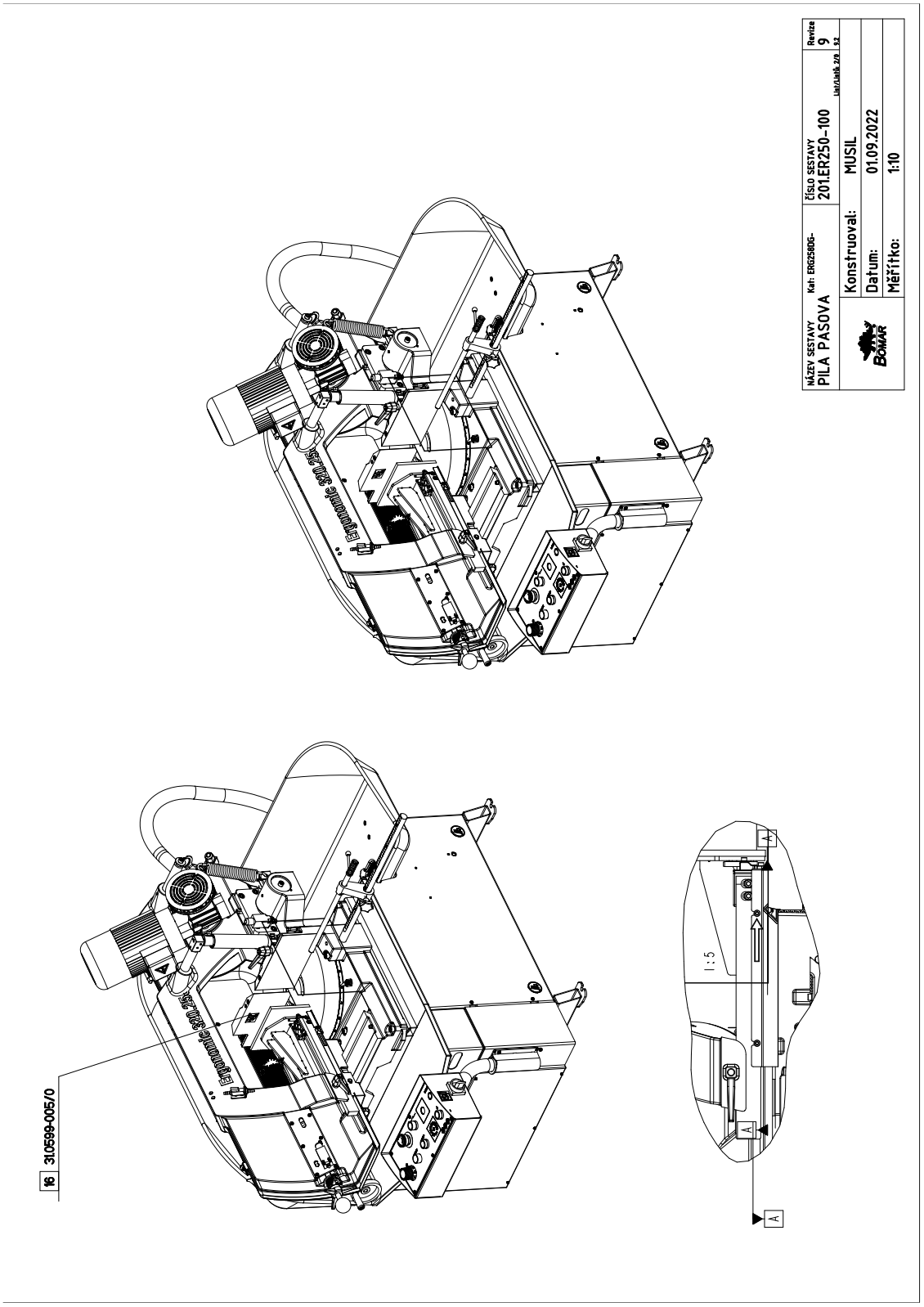

Poz.	Objednací číslo	Verze	Název CZ	Name EN	Name DE	Polotovar	Ks.
34	99.900.046	0	SAMOLEPKA	STICKER	AUFKLEBER	HV Hlavní vypínač	1
35	99.900.053	0	SAMOLEPKA	STICKER	AUFKLEBER	SŠ - Směrová šipka	1
36	99.900.068	0	SAMOLEPKA	STICKER	AUFKLEBER	vozik	4
37	99.901.091	0	SAMOLEPKA	STICKER	AUFKLEBER	Ergonomic 320.258 DGH	1

1.ZRUS.PODSTAVEC 201.ER251-100 A NAHR. 201.ER251-110,ZRUS.OVLADACI. PANEL 201.0513-340,NAHR.ROZVADECEM 201.ER2530-010, PRID.2xSROUB M6x10 90.013.27.007. 072/ZM148 13.6.2017 SLEZACKOVA
2.ZRUS. RAMENO 201.ER254-000 A NAHR. 201.ER254-100 127/ZM166 24.4.2019 IVICIC
3.ZR.VALEC ZVEDACI 201.ER257-010 A NAHR.201.ER257-110. 236/ZM96 26.02.2020 KOSYK
4.PRID.SOUCASTI Z RAMENE - 30.ER254-305;2x90.150.50.004;2x90.013.27.012;30.ER254-106;2x90.013.9Z.103;2x90.152.50.005; 91.173.012;2x90.152.50.001;2x90.013.9Z.114;2x90.013.27.003; 30.1814-011;2x94.202.002;99.260.003;99.260.003;90.150.50.007. 171/ZM311 24.9.2020 SLEZACKOVA
5.PRID. SAMOLEPKA 99.900.046, PRID. SAMOLEPKA 99.901.091. 142/ZM218 7.7.2021 KOVAR
6.ZRUS.DRZAK 30.1814-011;ZM.POLOHY SOUCASTI 99.260.003,94.202.002,90.150.50.007,96.080.001.002/ZM002 10.1.2022 SLEZACKOVA
7.ZRUS.ZMENA CISLO.6;UPR.VEDENI PASU (HLINIKOVE KOSTKY). 002/ZM055 17.2.2022 SLEZACKOVA
8.PRIDANA NALEPKA 31.0599-005. 197/ZM211 13.6.2022 JAGNESAK
9.ZRUS. PODL. 30.LK04-024 A NAHR. 31.ER04-034 027/ZM054 10.03.2023 OSTRIZEK

Číslo Sestavy/Number of assembly/Nummer der Baugruppe; Verze (Ver.)/Version/Version; Název sestavy/Assembly title/Name der Baugruppe; Datum/Date/Datum; Zhotovil/Creator/Schöpfer;
Název/Name/Name; Polotovar/Semiproduct/Halbfabrikat; Mat.vych./Starting material/Ausgangsmaterial; Jakost/Norm/Norm; Pov. úpr./Surface finish/Oberflächengüte;Váha/Mass/Masse; Poznámka/Note/Notiz

7.5. Chlazení / Cooling / Kühlung

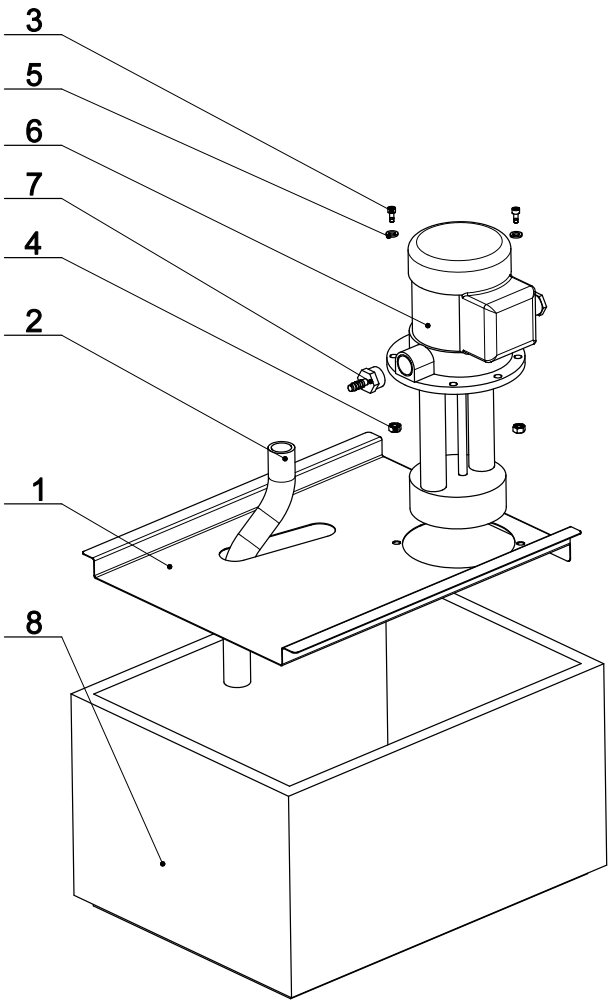

NAZEV SESTAVY	CISLO SESTAVY	STROJ
CHLAZENI	201.0506-100	ERGO250

BOMAR s.r.o.	Konstruoval: NEUMANN
	Datum: 15. 08.2018
	Meritko: 1:5

Cislo Sestavy	Ver.	Nazev sestavy
201.0506-100	0	CHLAZENI/COOLING/KÜHLUNG

Poz.	Objednaci cislo	Ver.	Nazev polozky	Rozmer	Ks
1	30.8006-501 (5)	0	VIKO / COVER / DECKEL	P 0,8 x329	1
2	42.020.003	0	HADICE / HOSE / SCHLAUCH	19x3	1
3	90.001.25.076 (6)	0	SROUB IMBUS / HEXAGON SOCKET SCREW / IMBUSSCHRAUBE	M6X18	2
4	90.100.55.004 (6)	0	MATICE PRESNA ZINEK / PRECISION NUT - ZN / PRÄZISE MUTTER - ZN	MATICE _ M6	2
5	90.152.50.001 (6)	0	PODLOZKA VEJIROVA / FAN WASHER / FÄCHERSCHEIBE	6.4	2
6	91.020.035 (4)	0	CERPADLO CHLAZENI / COOLING PUMP / KÜHLMITTELPUMPE	230/400V	1
7	94.202.020 (4)	0	REDUKCE / REDUCTION / ADAPTOR / REDUKTION	1/2"-6	1
8	94.403.003	0	NADRZ / CONTAINER / BEHÄLTER		1

1.ZRUS.CERPADLO 91.020.005 A NAHR.91.020.019,ZRUS.VIKO 30.0506-201 A NAHR.30.8006-301,ZRUS.SOUC.30.0506-003, 90.100.55.004,94.202.005,42.020.001,99.260.001,94.202.002. 299/ZM274 12.11.2013 SLEZACKOVA

2.PRIDANO SITO 30.8006-002. 024/ZM100 27.4.2016 SLEZACKOVA

3.ZRUSEN DRZAK 30.8006-002 A NAHR.30.ER251-014. 155/ZM281 16.9.2016 SLEZACKOVA

4.ZRUS.CERPADLO 91.020.019 A NAHR.91.020.035,ZRUS.VIKO 30.8006-301 A NAHR.30.8006-401,ZRUS.DRZAK 30.ER251-014, PRID.REDUKCE 94.202.020,4xPODLOZKA 6,4(90.152.50.001),4xMATICE M6(90.100.55.004),4xSROUB M6x18(90.001.25.076) 112/ZM151 19.4.2017 SLEZACKOVA

5.ZRUSENO VIKO 30.8006-401 A NAHR.30.8006-501.127/ZM172 10.5.2017 SLEZACKOVA

6.ZM. POCTU ZE 4 DILU SROUBENI NA 2: 90.001.25.076, 90.100.55.004, 90.152.50.001. 159/ZM284 15.8.2018 SZABARI

Cislo Sestavy/Number of assembly/Nummer der Baugruppe; Verze (Ver.)/Version/Version; Nazev sestavy/Assembly title/Name der Baugruppe; Pozice (Poz.)/Position/Position; Objednaci cislo/Purchase order number/Bestellnummer; Nazev polozky/Volume title/Name der Position; Rozmer/Stock size/Abmessung

7.7. Podstavec / Base / Untersatz

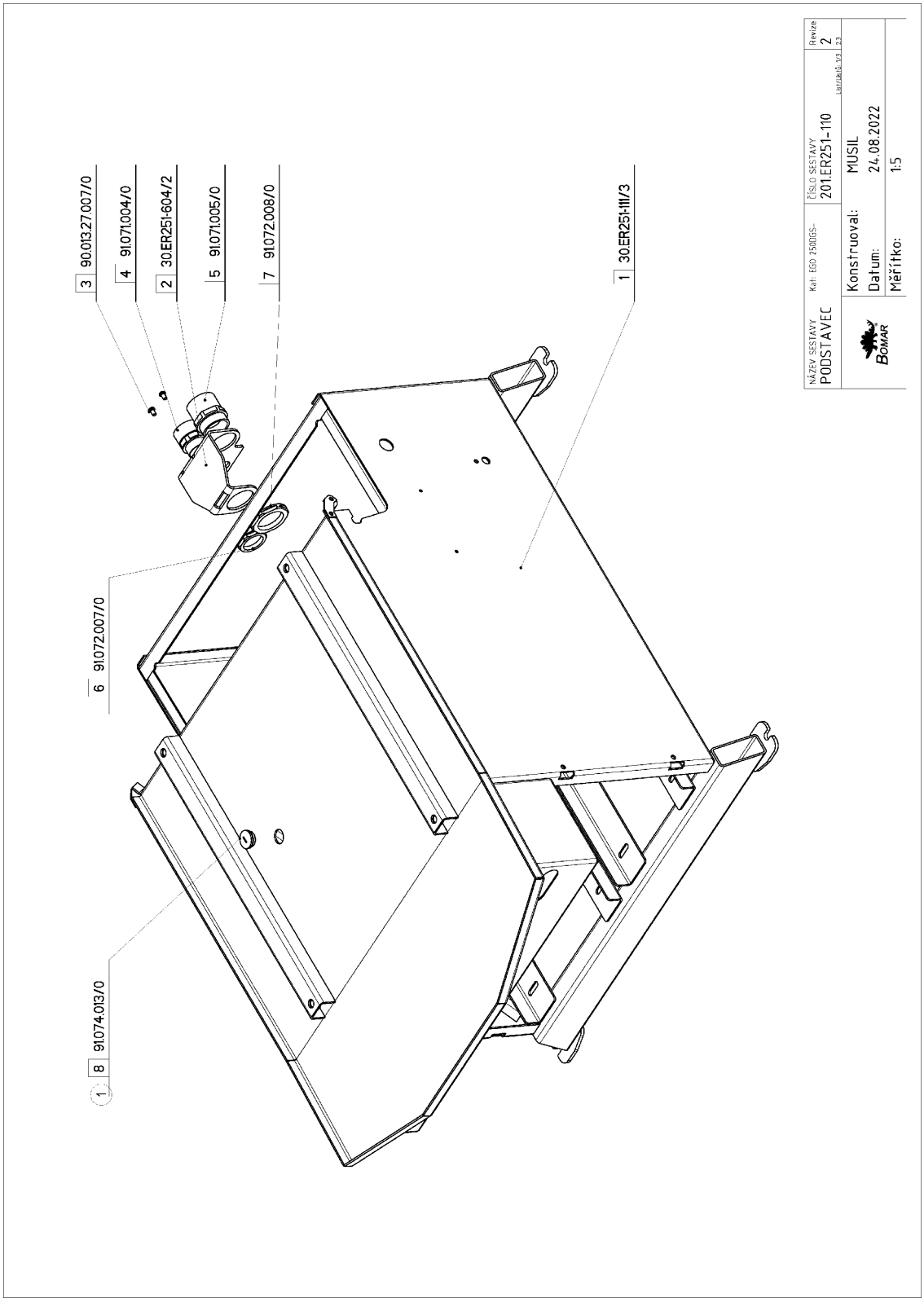

7.8. Kusovník / Piece list / Stückliste - Podstavec / Base / Untersatz

NAZEV SESTAVY	CISLO SESTAVY	REVIZE
PODSTAVEC	201.ER251-110	2

Poz.	Objednací číslo	Verze	Název CZ	Name EN	Name DE	Polotovar	Ks.
1	30.ER251-111	3	PODSTAVEC	BASE	UNTERSATZ		1
2	30.ER251-604	2	DRZAK	HOLDER	HALTER	P4 - 110x265	1
3	90.013.27.007	0	SROUB PULKULATY	BUTTON HEAD SCREW	RUNDKOPFSCHRAUBE	6x10 ISO 7380 čern	2
4	91.071.004	0	VYVODKA HADICE	OUTLET FOR HOSE	SCHLAUCHTÜLLE	MR-83601062 MSV-PG 29 černá	1
5	91.071.005	0	VYVODKA HADICE	OUTLET FOR HOSE	SCHLAUCHTÜLLE	MR-83601064 MSV-Pg 36	1
6	91.072.007	0	MATICE CERNA	BLACK NUT	MUTTER ROH	PG29 - černá M-BIMED PG29 -černá	1
7	91.072.008	0	MATICE CERNA	BLACK NUT	MUTTER ROH	PG36 - černá M-BIMED PG36 -černá	1
8	91.074.013	0	UCPAVKA	PLUG	ABDICHTUNG	AG-8845.25 U-BIMED M25x1,5 -černá	1

1.PRIDANA UCPAVKA 91.074.013. 219/ZM315 18.10.2017 SLEZACKOVA
2.ZRUSENA VYVODKA 91.071.015. 002/ZM006 12.1.2021 SLEZACKOVA

Číslo Sestavy/Number of assembly/Nummer der Baugruppe; Ver.-Verze/Version/Version; Název sestavy/Assembly name/Name der Baugruppe;; Poz.-Pozice/Position/Position; Objednací číslo/Order number/Bestellnummer; Polotovar/Semiproduct/Halbfabrikat; Vstupní materiál(Vstupní mat.)/Default material/Eingangsmaterial;

7.9. Vana/ Tank/ Wanne

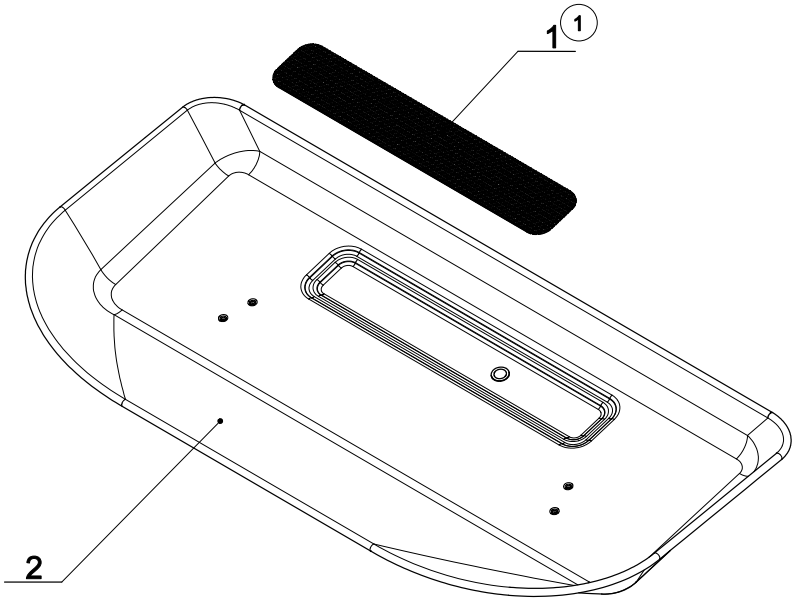

NAZEV SESTAVY	CISLO SESTAVY	STROJ
VANA	201.ER251-302	ERGO.250

BOMAR s.r.o.	Konstruoval: FABER
	Datum: 23. 10.2017
	Meritko: 13:100

7.10. Kusovník / Piece list / Stückliste - Vana/ Tank/ Wanne

Cislo Sestavy	Ver.	Nazev sestavy
201.ER251-302	0	VANA/TANK/WANNE

Poz.	Objednaci cislo	Ver.	Nazev polozky	Rozmer	Ks
1	30.ER251-304 (1)	0	SITO / SIEVE / GITTERWERK	P1x95	1
2	30.ER251-305	0	VANA / TANK / WANNE		1

1.PRIDAN KROUZEK 20x2(96.002.046),PODLOZKA 20(90.167.00.001),ZRUS.VANA 31.ER251-302.1 A NAHR.30.ER251-305. 213/ZM177 9.6.2016 SLEZACKOVA

2.ZRUS.TRUBKA 30.ER251-303,PODLOZKA 90.167.00.001,KROUZEK 96.002.046. 265/ZM345 21.10.2016 SLEZACKOVA

Cislo Sestavy/Number of assembly/Nummer der Baugruppe; Verze (Ver.)/Version/Version; Nazev sestavy/Assembly title/Name der Baugruppe; Pozice (Poz.)/Position/Position; Objednaci cislo/Purchase order number/Bestellnummer; Nazev polozky/Volume title/Name der Position; Rozmer/Stock size/Abmessung

7.11. Konzola otočná / Turnable consol / Drehkonsole

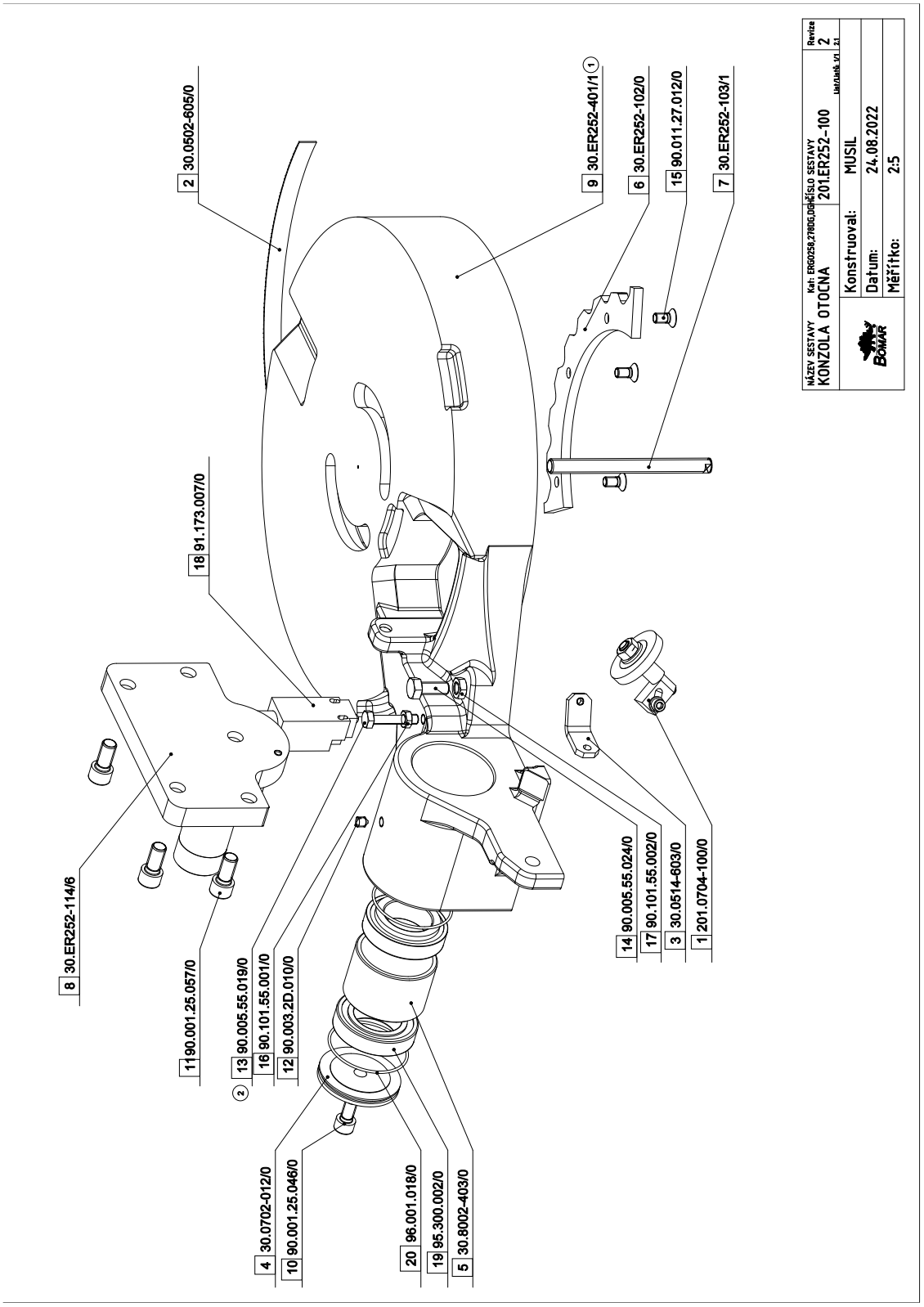

NAZEV SESTAVY	CISLO SESTAVY	REVIZE
KONZOLA OTOCNA	201.ER252-100	2

rpt.index

Poz.	Objednací číslo	Verze	Název CZ	Name EN	Name DE	Polotovar	Ks.
1	201.0704-100	0	KARTAC	BRUSH	BÜRSTE		1
2	30.0502-605	0	MERITKO	MEASURE	SKALA	<Chybné parametry pro polotovar '40.005.01.01' typu 'P'>	1
3	30.0514-603	0	DRZAK	HOLDER	HALTER	<Chybné parametry pro polotovar '40.001.01.37' typu 'P'>	1
4	30.0702-012	0	VIKO	COVER	DECKEL	<Chybné parametry pro polotovar '40.001.01.31' typu 'P'>	1
5	30.8002-403	0	POUZDRO	SLEEVE	BÜCHSE	TR70x5 - 47	1
6	30.ER252-102	0	SEGMENT	SEGMENT	SEGMENT		1
7	30.ER252-103	1	SROUB	SCREW	SCHRAUBE	TZM12x1.75P - 140	1
8	30.ER252-114	6	KONZOLA	BRACKET	KONSOLE		1
9	30.ER252-401 (1)	1	KONZOLA OTOCNA	PIVOT BRACKET	DREHKONSOLE		1
10	90.001.25.046	0	SROUB IMBUS	HEXAGON SOCKET SCREW	IMBUSSCHRAUBE	10x20	1
11	90.001.25.057	0	SROUB IMBUS	HEXAGON SOCKET SCREW	IMBUSSCHRAUBE	12x25	4
12	90.003.2D.010	0	SROUB STAVECI	SET SCREW	STELLSCHRAUBE	8x10	1
13	90.005.55.019 (2)	0	SROUB 6HRANNY	HEX HEAD SCREW	SECHSKANTSCHRAUBE	8x40	1
14	90.005.55.024	0	SROUB 6HRANNY	HEX HEAD SCREW	SECHSKANTSCHRAUBE	10x25	1
15	90.011.27.012	0	SROUB ZAPUSTNY	COUNTERSUNK SCREW	SENKSCHRAUBE	8x16	3
16	90.101.55.001	0	MATICE PR.NIZKA ZN	PRECISION THIN NUT - ZN	PRÄZISE MUTTER NIEDRIGE - ZN	8	1
17	90.101.55.002	0	MATICE PR.NIZKA ZN	PRECISION THIN NUT - ZN	PRÄZISE MUTTER NIEDRIGE - ZN	10	1
18	91.173.007	0	SPINAC KONCOVY	END SWITCH	ENDSCHALTER	KBA1L11 Lovato (D4N-4A31)	1
19	95.300.002	0	LOZISKO	BEARING	LAGER	32008	2
20	96.001.018	0	O-KROUZEK STATICKY	O-RING STATIC	O-RING STATISCH	63x2 NBR 70Sh	2

1.ZRUS.KONZOLA 30.ER252-101 A NAHR.30.ER252-401. 105/ZM140 13.5.2021 SLEZACKOVA
2.ZRUS.DIL 30.0702-013 A NAHR.90.005.55.019. 118/ZM254 31.8.2022 JAGNESAK

Číslo Sestavy/Number of assembly/Nummer der Baugruppe; Ver.-Verze/Version/Version; Název sestavy/Assembly name/Name der Baugruppe;; Poz.-Pozice/Position/Position; Objednací číslo/Order number/Bestellnummer;
Polotovar/Semiproduct/Halbfabrikat; Vstupní materiál(Vstupní mat.)/Default material/Eingangsmaterial;

7.13. Kartáč / Brush / Bürste

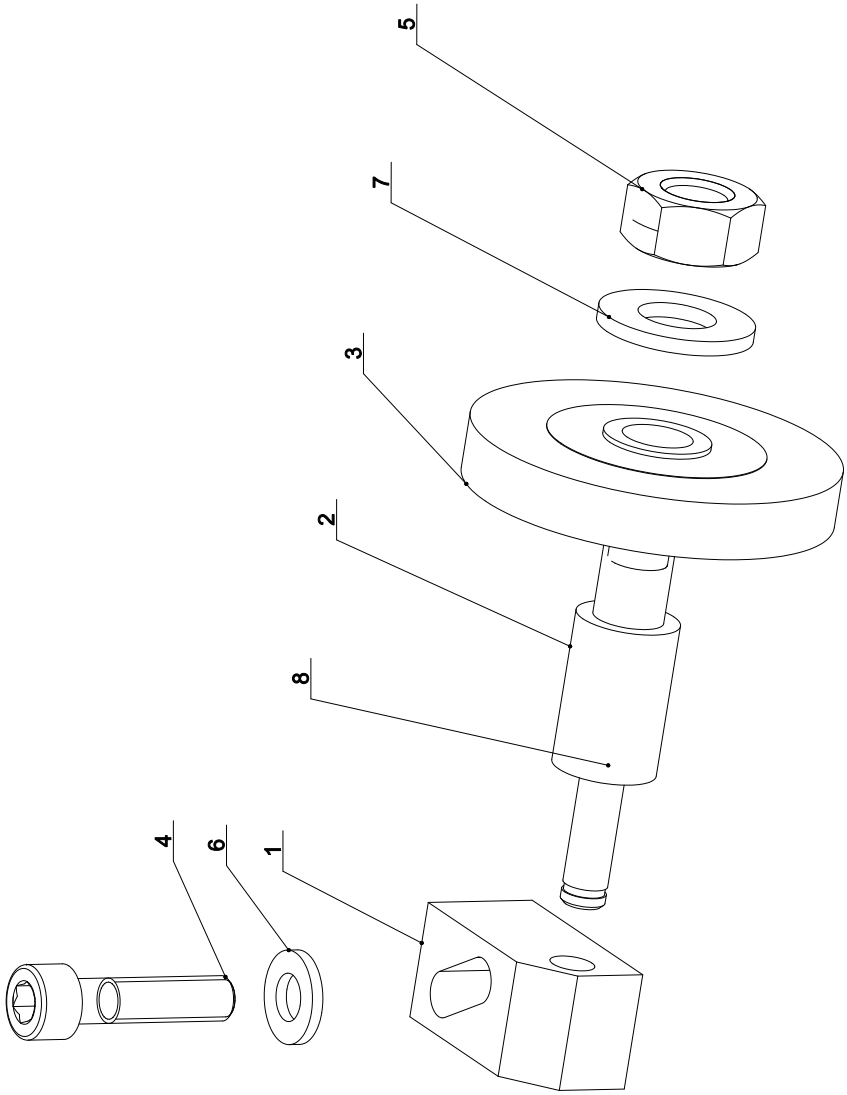

NAZEV SESTAVY	CISLO SESTAVY	STROJ
KARTAC	201.0704-100	
	Konstruoval: VINOHRADSKY	
	Datum: 23. 03.2018	
	Meritko: 2:1	

7.14. Kusovník / Piece list / Stückliste - Kartáč / Brush / Bürste

Cislo Sestavy 201.0704-100	Ver. 0	Nazev sestavy KARTAC/BRUSH/BÜRSTE

Poz.	Objednaci cislo	Ver.	Nazev polozky	Rozmer	Ks
1	30.0104-022	0	DRZAK / HOLDER / HALTER	HR 16x16	1
2	30.0704-029	0	HRIDEL / SHAFT / WELLE	d 14	1
3	31.0704-031	0	KARTAC / BRUSH / BÜRSTE	D 50/ d 9.5	1
4	90.001.25.019	0	SROUB IMBUS / HEXAGON SOCKET SCREW / IMBUSSCHRAUBE	M6X25	1
5	90.100.55.006	0	MATICE PRESNA ZINEK / PRECISION NUT - ZN / PRÄZISE MUTTER - ZN	MATICE _ M10	1
6	90.150.50.004	0	PODLOZKA / WASHER / UNTERLEGSCHEIBE	PODLOZKA 6,4	1
7	90.150.50.006	0	PODLOZKA / WASHER / UNTERLEGSCHEIBE	PODLOZKA 10,5	1
8	95.800.001	0	KROUZEK POJIST.VNEJS / EXTERNAL RETAINING RING / SICHERUNGSRING AUßEN	POJISTNY KROUZEK 6	1

Cislo Sestavy/Number of assembly/Nummer der Baugruppe; Verze (Ver.)/Version/Version; Nazev sestavy/Assembly title/Name der Baugruppe; Pozice (Poz.)/Position/Position;
Objednaci cislo/Purchase order number/Bestellnummer; Nazev polozky/Volume title/Name der Position; Rozmer/Stock size/Abmessung

7.15. Rozvaděč elektro / Electro distributor / Schaltschrank

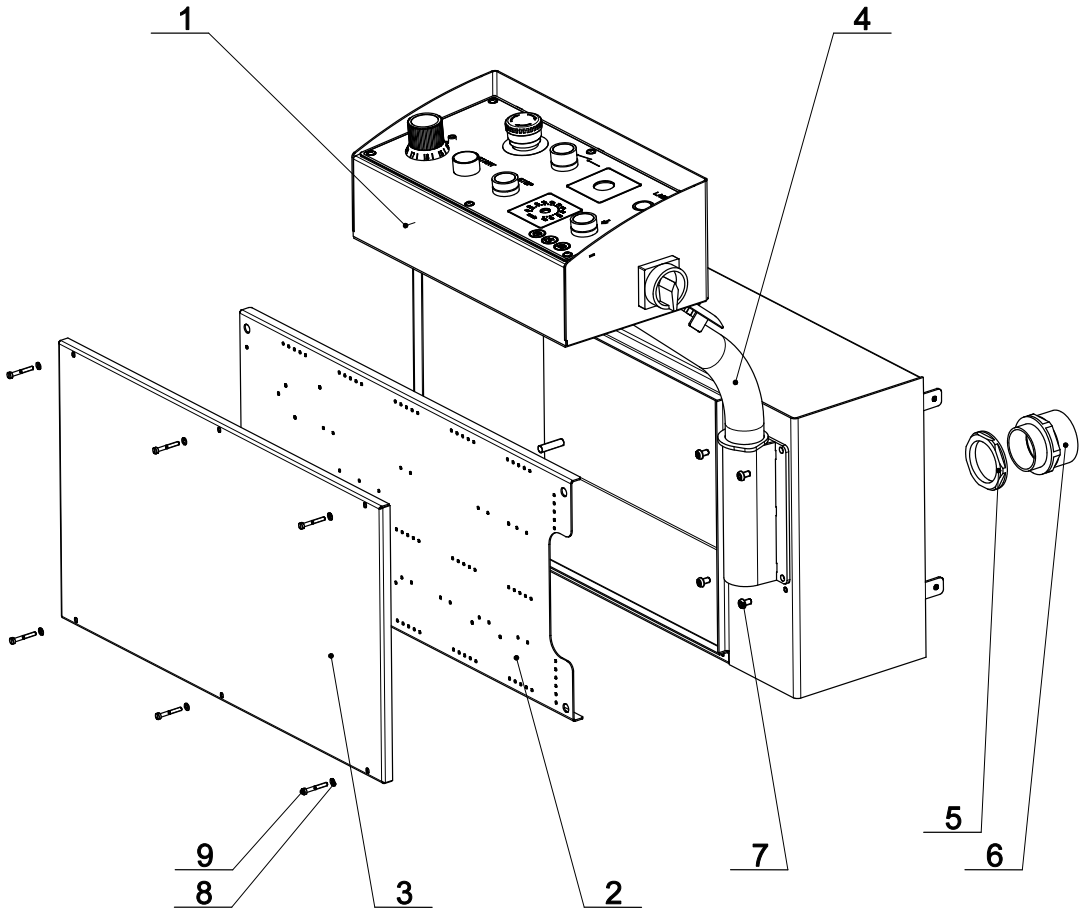

NAZEV SESTAVY	CISLO SESTAVY	STROJ
*	ER2530-010_258DG	ERG.258

BOMAR s.r.o.	Konstruoval:
	Datum: 13. 06.2018
	Meritko: 3:50

7.16. Kusovník / Piece list / Stückliste - Rozvaděč elektro / Electro distributor / Schaltschrank

Cislo Sestavy	Ver.	Nazev sestavy
ER2530-010_258DG	0	*/null/null

Poz.	Objednaci cislo	Ver.	Nazev polozky	Rozmer	Ks
1	30.ER2530-011	0	ROZVADEC ELEKTRO / SWITCH CABINET / SCHALTSCHRANK		1
2	30.0513-304	0	PANEL / PANEL / PANEL	P 1,5x314	1
3	30.ER2530-012	0	VIKO / COVER / DECKEL		1
4	201.0513-340	0	OVLADACI PANEL / CONTROL PANEL / BEDIENPULT		1
5	91.072.016	0	MATICE CERNA / BLACK NUT / MUTTER ROH		1
6	91.071.022	0	VYVODKA HADICE / OUTLET FOR HOSE / SCHLAUCHTÜLLE		1
7	90.013.27.007	0	SROUB PULKULATY / BUTTON HEAD SCREW / RUNDKOPFSCHRAUBE	M6X10	4
8	90.152.50.005	0	PODLOZKA VEJIROVA / FAN WASHER / FÄCHERSCHEIBE	PODLOZKA 4,3	6
9	90.012.50.007	0	SROUB VALCOVY / CYLINDER HEAD BOLT / ZYLINDERKOPFSCHRAUBE	SROUB M4X30	6

Cislo Sestavy/Number of assembly/Nummer der Baugruppe; Verze (Ver.)/Version/Version; Nazev sestavy/Assembly title/Name der Baugruppe; Pozice (Poz.)/Position/Position;
Objednaci cislo/Purchase order number/Bestellnummer; Nazev polozky/Volume title/Name der Position; Rozmer/Stock size/Abmessung

7.17. Ovládací panel / Control panel / Bedienpult

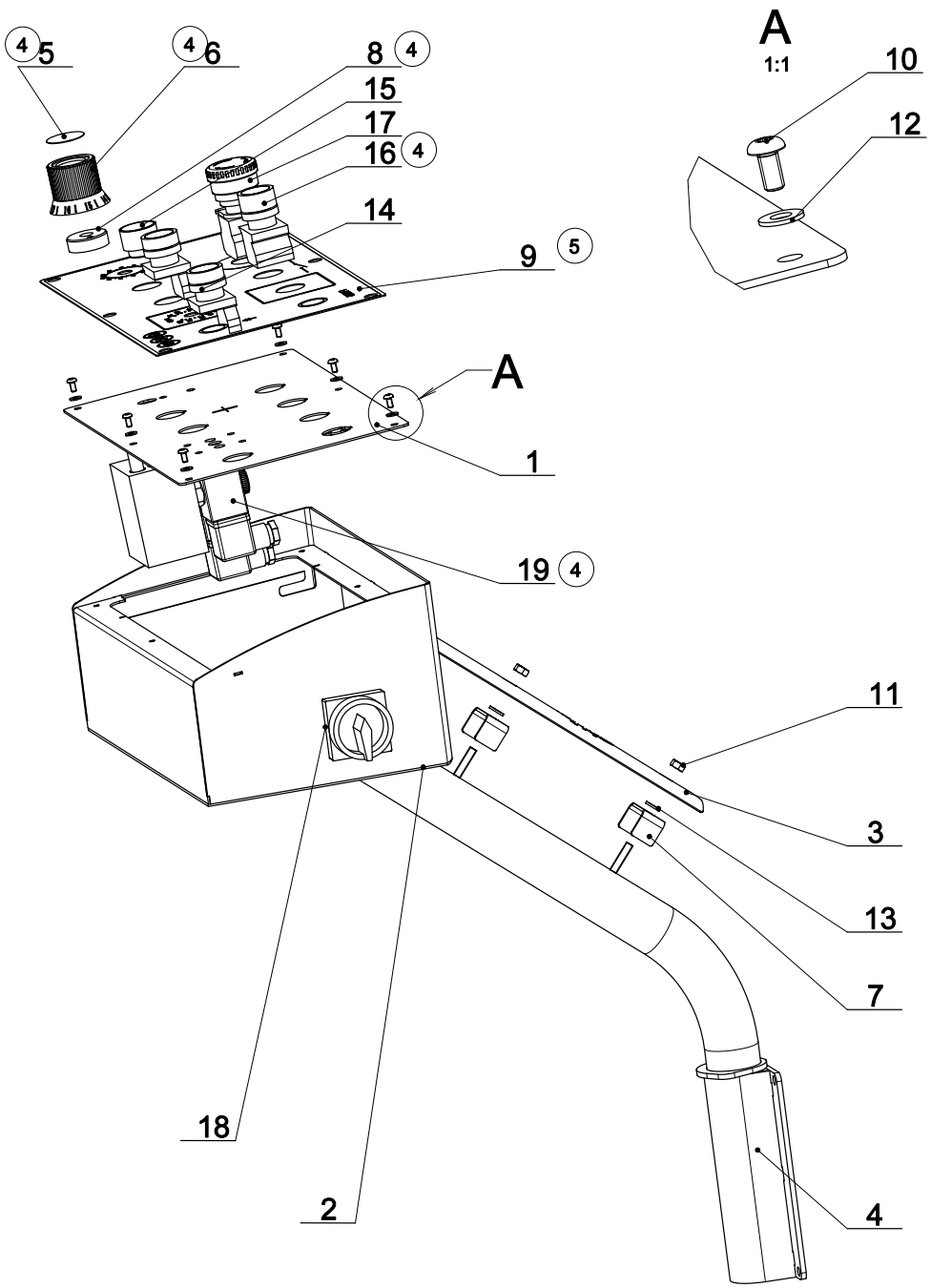

NAZEV SESTAVY	CISLO SESTAVY	STROJ
OVLADACI PANEL	201.0513-340	ERG.258/278DG

BOMAR s.r.o.	Konstruoval: FABER
	Datum: 14. 07.2021
	Meritko: 1:4

Cislo Sestavy	Ver.	Nazev sestavy
201.0513-340	0	OVLADACI PANEL/CONTROL PANEL/BEDIENPULT

Poz.	Objednaci cislo	Ver.	Nazev polozky	Rozmer	Ks
1	30.0513-241	0	OVLADACI PANEL / CONTROL PANEL / BEDIENPULT		1
2	30.0513-320	0	NOHA / LEG / STÄNDER		1
3	30.0513-344 (1)	0	KRYT / COVER / ABDECKUNG	P 1x64	1
4	30.2814-607	0	DRZAK / HOLDER / HALTER		1
5	30.6130-012 (4)	0	VIKO / COVER / DECKEL	P 0,5x30	1
6	30.6130-018 (4)	0	HLAVICE / HEAD / KOPF	VYLISEK	1
7	30.ER2530-308 (1)	0	DRZAK / HOLDER / HALTER	P 2x20	2
8	30.M230-006 (4)	0	MEZIKUS / INSERTED PIECE / EINGESETZTES STÜCK	d 32	1
9	31.0513-404 (5)	0	SAMOLEPKA / STICKER / AUFKLEBER		1
10	90.013.27.001	0	SROUB PULKULATY / BUTTON HEAD SCREW / RUNDKOPFSCHRAUBE	M4x8	6
11	90.100.55.004	0	MATICE PRESNA ZINEK / PRECISION NUT - ZN / PRÄZISE MUTTER - ZN	MATICE _ M6	2
12	90.150.50.002	0	PODLOZKA / WASHER / UNTERLEGSCHEIBE	PODLOZKA 4,3	6
13	90.150.50.004	0	PODLOZKA / WASHER / UNTERLEGSCHEIBE	PODLOZKA 6,4	2
14	91.060.013	0	HLAVICE / HEAD / KOPF	CERNE_TLACITKO	2
15	91.060.014	0	HLAVICE / HEAD / KOPF		1
16	91.060.062 (4)	0	SPINAC / SWITCH / SCHALTER	MODRE_PROSVETLENE_TLACITKO	1
17	91.060.084	0	HLAVICE TOTAL STOP / TOTAL STOP HEAD / TASTE TOTAL STOP		1
18	91.170.028 (2)	0	VYPINAC / SWITCH / SCHALTER	VYPINAC	1
19	92.153.071 (4)	0	VENTIL / VALVE / VENTIL	V207-006-1	1

1.ZRUS.DRZAK 30.9307-109 A NAHR.30.ER2530-308,PRID.KRYT 30.0513-344. 155/ZM365 10.11.2016 SLEZACKOVA
2.PRID. 1xVYPINAC 91.170.028; 115/ZM213 29.6.2018 SCERBA
3.ZRUSENA SAMOLEPKA 31.0513-404 A NAHRAZENA 31.0513-504. 101/ZM135 10.5.2021 SLEZACKOVA
4.ZRUS.VENTIL 92.152.001 A NAHR. 92.153.071. PRID. VIKO 30.6130-012, HLAVICE 30.6130-018 A MEZIKUS 30.M230-006. 142/ZM218 7.7.2021 KOVAR
4.ZRUS. SPINAC 91.060.023 A NAHR. SPINACEM 91.060.062. 141/ZM225 14.7.2021 KOVAR
5.ZRUSENA SAMOLEPKA 31.0513-504 A NAHRAZENA 31.0513-404. 212/ZM301 1.9.2021 KOVAR

Cislo Sestavy/Number of assembly/Nummer der Baugruppe; Verze (Ver.)/Version/Version; Nazev sestavy/Assembly title/Name der Baugruppe; Pozice (Poz.)/Position/Position;
Objednaci cislo/Purchase order number/Bestellnummer; Nazev polozky/Volume title/Name der Position; Rozmer/Stock size/Abmessung

7.19. Rameno / Saw arm / Sägerahmen

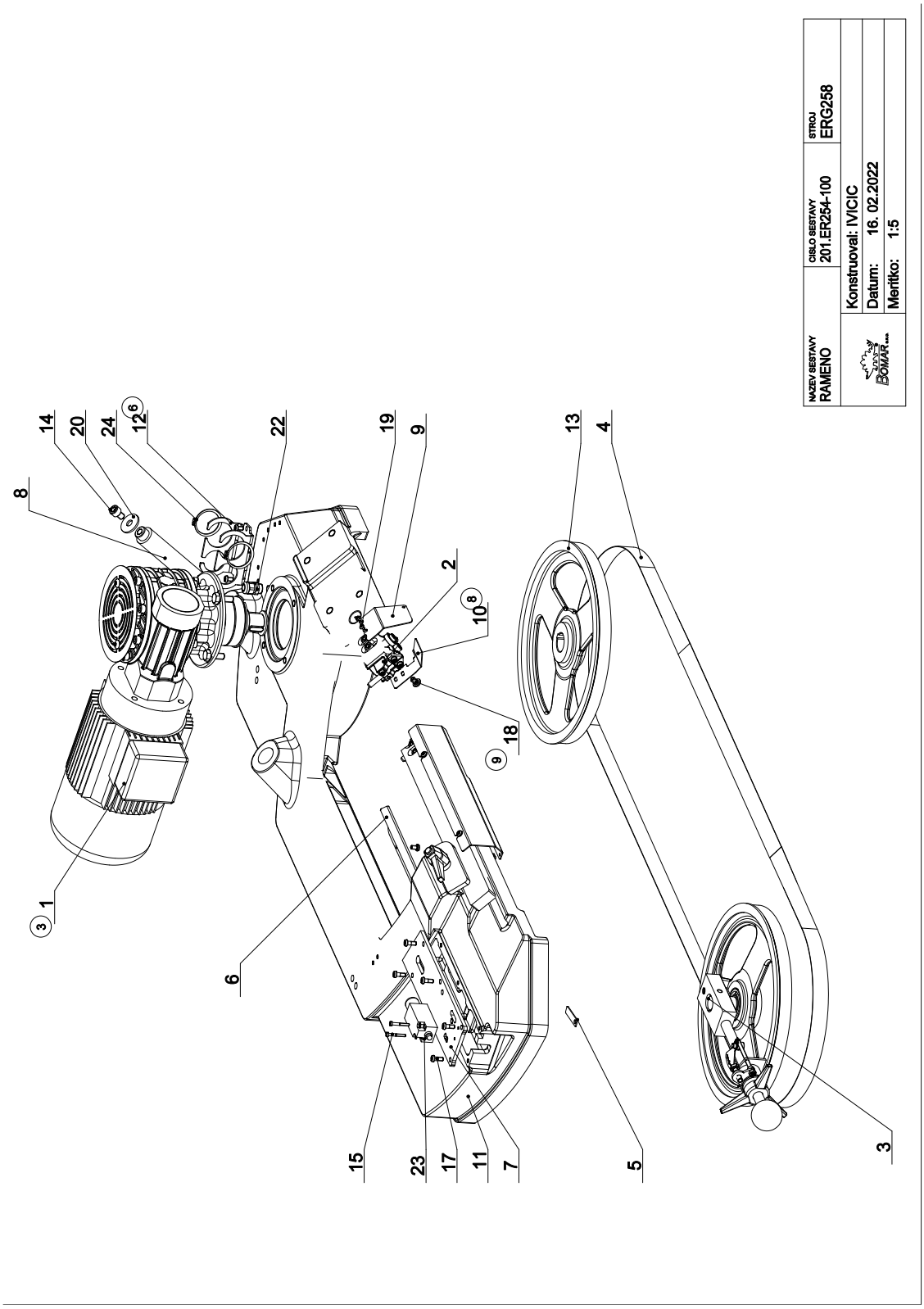

7.20. Kusovník / Piece list / Stückliste - Rameno / Saw arm / Sägerahmen

Cislo Sestavy	Ver.	Nazev sestavy
201.ER254-100	0	RAMENO/BEAM/RAHMEN

Poz.	Objednaci cislo	Ver.	Nazev polozky	Rozmer	Ks
1	201.ER255-100 (3)	0	POHON / DRIVE / ANTRIEB		1
2	201.ER256-000	0	VEDENI PASU / SAW BAND GUIDE / SÄGEBANDFÜHRUNG		1
3	201.ER258-000	0	NAPINANI / TENSIONING / SPANNUNG		1
4	30.0504-961	0	PAS PILOVY / SAW BAND / SÄGEBAND	2910x25(7)x0.9	1
5	30.ER254-002	0	PLECH / SHEET METAL / BLECH	P 1,5x12	1
6	30.ER254-004	0	KRYT RAMENE / ARM COVER / RAHMENABDECKUNG	P 1,5x61	1
7	30.ER254-007	0	KRYT NAPINANI / COVER FOR TENSIONING DEV. / BANDSPANNUNGSABDECKUNG	P 6x80	1
8	30.ER254-009	0	TYC / POLE / STANGE	d 30	1
9	30.ER254-013 (7)	0	KRYT PASU / BELT COVER / BANDABDECKUNG	P 1x56	1
10	30.ER254-014 (8)	0	KRYT PASU / BELT COVER / BANDABDECKUNG	P 1x47	1
11	30.ER254-101	0	RAMENO / BEAM / RAHMEN		1
12	30.ER254-401 (6)	0	DRZAK / HOLDER / HALTER	P 3x100	1
13	30.ER265-601	0	KOLO HNACI / DRIVE WHEEL / ANTRIEBSRAD		1
14	90.001.25.044	0	SROUB IMBUS / HEXAGON SOCKET SCREW / IMBUSSCHRAUBE	M10X14	1
15	90.012.50.007	0	SROUB VALCOVY / CYLINDER HEAD BOLT / ZYLINDERKOPFSCHRAUBE	SROUB M4X30	2
16	90.013.27.007	0	SROUB PULKULATY / BUTTON HEAD SCREW / RUNDKOPFSCHRAUBE	M6X10	4
17	90.013.27.008	0	SROUB PULKULATY / BUTTON HEAD SCREW / RUNDKOPFSCHRAUBE	M6X16	6
18	90.013.27.011 (9)	0	SROUB PULKULATY / BUTTON HEAD SCREW / RUNDKOPFSCHRAUBE	M8X12	1
19	90.013.27.017	0	SROUB PULKULATY / BUTTON HEAD SCREW / RUNDKOPFSCHRAUBE	M4x6	2
20	90.151.50.001	0	PODLOZKA VELKOPL. / LARGE WASHER / GROßFLÄCHENSCHEIBE	PODLOZKA 10	1
21	90.152.50.005	0	PODLOZKA VEJIROVA / FAN WASHER / FÄCHERSCHEIBE	PODLOZKA 4,3	2
22	91.070.011	0	* / null / null	M16x1.5	1
23	91.173.007	0	SPINAC KONCOVY / END SWITCH / ENDSCHALTER	-RIWK	1
24	95.800.016	0	KROUZEK POJIST.VNEJS / EXTERNAL RETAINING RING / SICHERUNGSRING AUßEN	POJISTNY KROUZEK 42	2

1.PRID.DRZAK 30.ER254-106; 164/ZM222 30.5.2019 SCERBA
2.PRID.2xSROUB M6x10 90.013.9Z.114,2x90.152.50.001,2x90.152.50.005,ZRUS.SROUB M4x30 90.013.9Z.104 A NAHR.M4x25 90.013.9Z.103. 164/ZM393 24.9.2019 SZABARI
3.ZM.POLOHY POHONU 201.ER255-100, NATACIT PRI MONTAZI. 236/ZM096 26.02.2020 KOSYK
4.ZRUS.SOUCASTI - CEP 30.ER254-003;KRYT RAMENE 30.ER254-305;DRZAK 30.1814-011;VENTIL 99.260.003;REDUKCE 94.202.002; PODLOZKA 90.150.50.007; 2xSROUB 90.013.27.007;DRZAK 30.ER254-106;SPINAC 91.173.012;2xSROUB 90.013.9Z.114;2xPODLOZKA 90.152.50.005;2xSROUB 90.013.9Z.103; 2xSROUB 90.013.27.012;2xPODLOZKA 90.150.50.004 A DANO DO PILY 201.ER250-100; DO KUSOVNIKU STROJE 251.635. 171/ZM311 23.9.2020 SLEZACKOVA
5.ZRUSEN KRYT PASU 30.0704-038 A NAHR.30.ER254-012. 105/ZM140 13.5.2021 SLEZACKOVA
6.ZRUSEN DRZAK 30.ER254-008 A NAHR. 30.ER254-401 227/ZM314 6.9.2021 ZINDULKA
7.ZRUS. KRYT PASU 30.ER254-012 A NAHR. KRYTEM 30.ER254-013. 259/363 5.10.2021 KOVAR
8.ZRUS.KRYT 30.0704-043 A NAHR.30.ER254-014,ZRUS.SROUB SROUB M8x12(90.013.27.011),PRID.2xSROB M4x6(90.013.27.017).002/ZM002 6.1.2022 SLEZACKOVA
9.UP.VEDENI PASU-VYMENA KOSTEK(ZRUS.CERNE KOSTKY A NAHR.HLINIKOVYMI),ZRUS.2xSROUB M4x6(90.013.27.017) A NAHR.1xSROUB M8x12(90.013.27.011). 002/ZM055 16.2.2022 SLEZACKOVA

Cislo Sestavy/Number of assembly/Nummer der Baugruppe; Verze (Ver.)/Version/Version; Nazev sestavy/Assembly title/Name der Baugruppe; Pozice (Poz.)/Position/Position;
Objednaci cislo/Purchase order number/Bestellnummer; Nazev polozky/Volume title/Name der Position; Rozmer/Stock size/Abmessung

7.21. Pohon / Drive / Antrieb

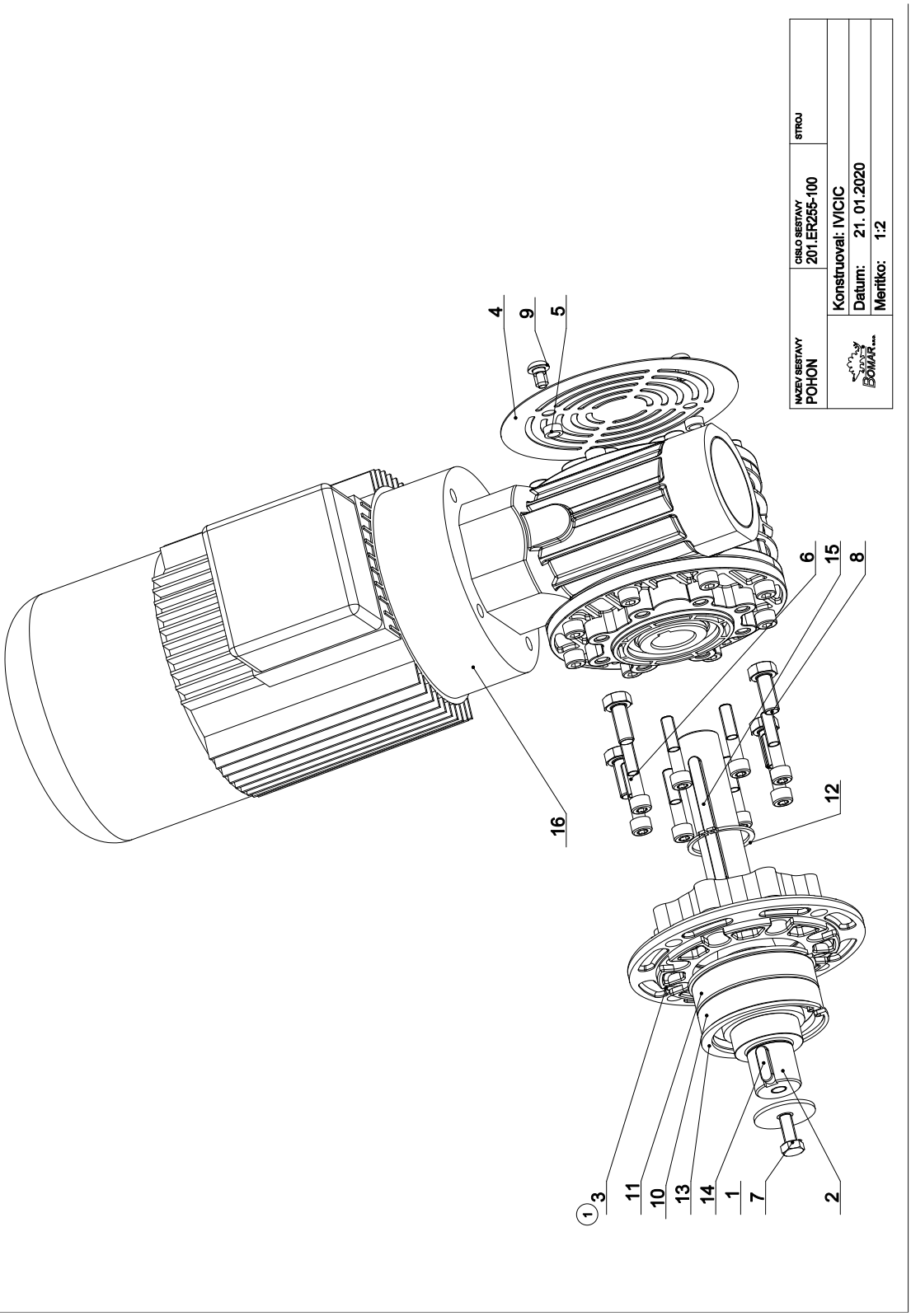

7.22. Kusovník / Piece list / Stückliste
Pohon / Drive / Antrieb

Cislo Sestavy	Ver.	Nazev sestavy
201.ER255-100	0	POHON/DRIVE /ANTRIEB

Poz.	Objednaci cislo	Ver.	Nazev polozky	Rozmer	Ks
1	30.0505-011	0	PODLOZKA / WASHER / UNTERLEGSCHEIBE	P 2.5x40	1
2	30.ER255-101	0	HRIDEL / SHAFT / WELLE	D 45	1
3	30.ER255-102 (1)	0	PRIRUBA / FLANGE / FLANSCHE	ODLITEK	1
4	30.ER255-105	0	KRYT / COVER / ABDECKUNG	P0.8x156	1
5	30.ER255-107	0	DISTANC / SPACER / ABSTANDSSTÜCK	TR 12x2	2
6	90.001.25.036	0	SROUB IMBUS / HEXAGON SOCKET SCREW / IMBUSSCHRAUBE	M8X40	8
7	90.005.55.015	0	SROUB 6HRANNY / HEX HEAD SCREW / SECHSKANTSCHRAUBE	SROUB M8X20	1
8	90.005.55.024	0	SROUB 6HRANNY / HEX HEAD SCREW / SECHSKANTSCHRAUBE	SROUB M10X25	4
9	90.013.27.011	0	SROUB PULKULATY / BUTTON HEAD SCREW / RUNDKOPFSCHRAUBE	M8X12	2
10	95.001.021	0	LOZISKO / BEARING / LAGER	6206 2RS	1
11	95.200.001	0	LOZISKO / BEARING / LAGER	VALECKOVA L. 1RADA	1
12	95.800.015	0	KROUZEK POJIST.VNEJS / EXTERNAL RETAINING RING / SICHERUNGSRING AUßEN	POJISTNY KROUZEK 40	1
13	95.801.013	0	KROUZEK POJIST.VNITR / INERNAL RETAINING RING / SICHERUNGSRING INNEN	POJISTNY KROUZEK 80	2
14	95.810.007	0	PERO TESNE / FEATHER KEY / PASSFEDER	PERO 8X7X25	1
15	95.810.026	0	PERO TESNE / FEATHER KEY / PASSFEDER	PERO 8X7X90	1
16	99.001.260	0	PREVODOVKA S MOTOREM / GEARBOX WITH MOTOR / GETRIEBE MIT MOTOR	MI70-PAM90-20/1-FP-I20-B14	1

1.ZR.PRIRUBA 30.ER255-202 A NAHR. 30.ER255-102. 026/ZM039 21.01.2020 KOSYK

Cislo Sestavy/Number of assembly/Nummer der Baugruppe; Verze (Ver.)/Version/Version; Nazev sestavy/Assembly title/Name der Baugruppe; Pozice (Poz.)/Position/Position;
Objednaci cislo/Purchase order number/Bestellnummer; Nazev polozky/Volume title/Name der Position; Rozmer/Stock size/Abmessung

7.23. Vedení pásu / Belt guide / Sägebandführung

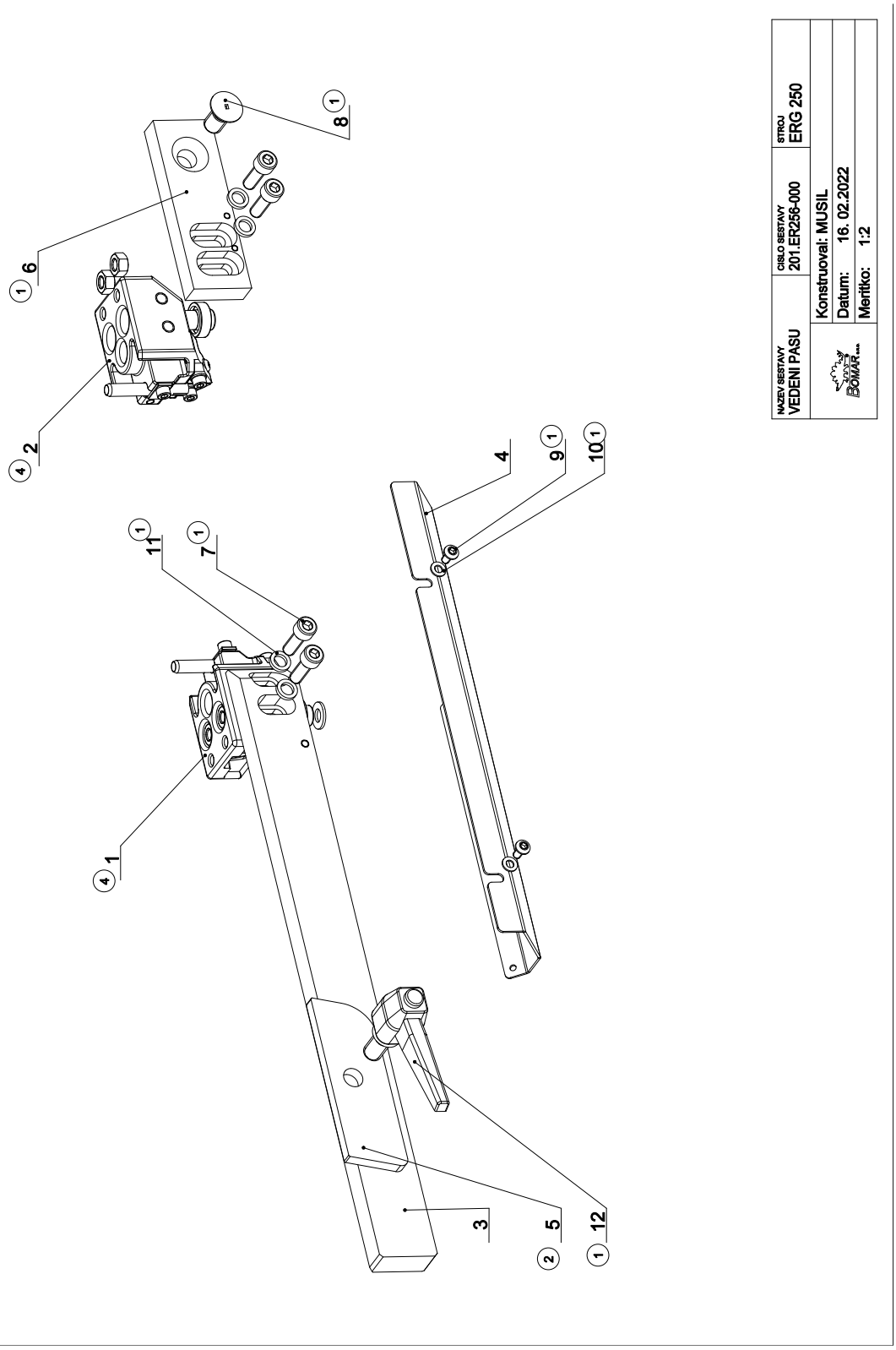

Cislo Sestavy	Ver.	Nazev sestavy
201.ER256-000	0	VEDENI PASU/SAW BAND GUIDE/SÄGEBANDFÜHRUNG

Poz.	Objednaci cislo	Ver.	Nazev polozky	Rozmer	Ks
1	201.0510-500 (4)	0	KOSTKA VODICI / GUIDING CUBE / FÜHRUNGSKLOTZ	SESTAVA	1
2	201.0510-600 (4)	0	KOSTKA VODICI / GUIDING CUBE / FÜHRUNGSKLOTZ	SESTAVA	1
3	30.0104-015	0	LISTA / SLAT / LEISTE	HR 40x20	1
4	30.ER256-005	0	KRYT PASU / BELT COVER / BANDABDECKUNG	P 1,5x94	1
5	30.ER256-101 (2)	0	UPINKA / FASTENER / VERSCHLUSS	P 8x40	1
6	30.FL256-002 (1)	0	LISTA / SLAT / LEISTE	HR 40x15	1
7	90.001.25.033 (1)	0	SROUB IMBUS / HEXAGON SOCKET SCREW / IMBUSSCHRAUBE	8x25	4
8	90.011.27.025 (1)	0	SROUB ZAPUSTNY / COUNTERSUNK SCREW / SENKSCHRAUBE	SROUB M12X25	1
9	90.013.27.003 (1)	0	SROUB PULKULATY / BUTTON HEAD SCREW / RUNDKOPFSCHRAUBE	M5X10	2
10	90.150.50.003 (1)	0	PODLOZKA / WASHER / UNTERLEGSCHEIBE	PODLOZKA 5,3	2
11	90.163.00.002 (1)	0	PODLOZKA / WASHER / UNTERLEGSCHEIBE	NORD-LOCK	4
12	94.008.008 (1)	0	PAKA MONTAZNI / ASSEMBLY LEVER / MONTAGEHEBEL	M12x25	1

1.ZRUS.LISTA 30.ER236-002 A NAHR.30.FL256-002,UPINKA 30.ER256-003 A NAHR.30.ER256-001,ZRUS.PAKA UTAHOVACI M10x25 (94.008.005) A NAHR.PAKA UTAHOVACI M12x25(94.008.008),PRID,2xPODLOZKA 5,3(90.150.50.003),2xSROUB M5x10(90.013.27.003), 4xPODLOZKA NORD-LOCK(90.163.00.002),4xSROUB M8x25(90.001.25.033),1xSROUB M12x25(90.011.27.025). 021/ZM147 11.4.2017 SLEZACKOVA
2.ZRUS.UPINKA 30.ER256-001 A NAHR.30.ER256-101; 148/ZM257 18.7.2018 SCERBA
3.ZRUS.KOSTKA 201.0510-600 A NAHR.201.0110-200,ZRUS.KOSTKA 201.0510-500 A NAHR.201.0110-100. 002/ZM002 2022 SLEZACKOVA
4.ZRUS.KOSTKA 201.0110-200 A NAHR.201.0510-600;ZRUS.KOSTKA 201.0110-100 A NAHR.201.0510-500.002/ZM055 16.2.2022 SLEZACKOVA

Cislo Sestavy/Number of assembly/Nummer der Baugruppe; Verze (Ver.)/Version/Version; Nazev sestavy/Assembly title/Name der Baugruppe; Pozice (Poz.)/Position/Position;
Objednaci cislo/Purchase order number/Bestellnummer; Nazev polozky/Volume title/Name der Position; Rozmer/Stock size/Abmessung

7.25. Kostka vodící / Lead cube / Führungsklotz

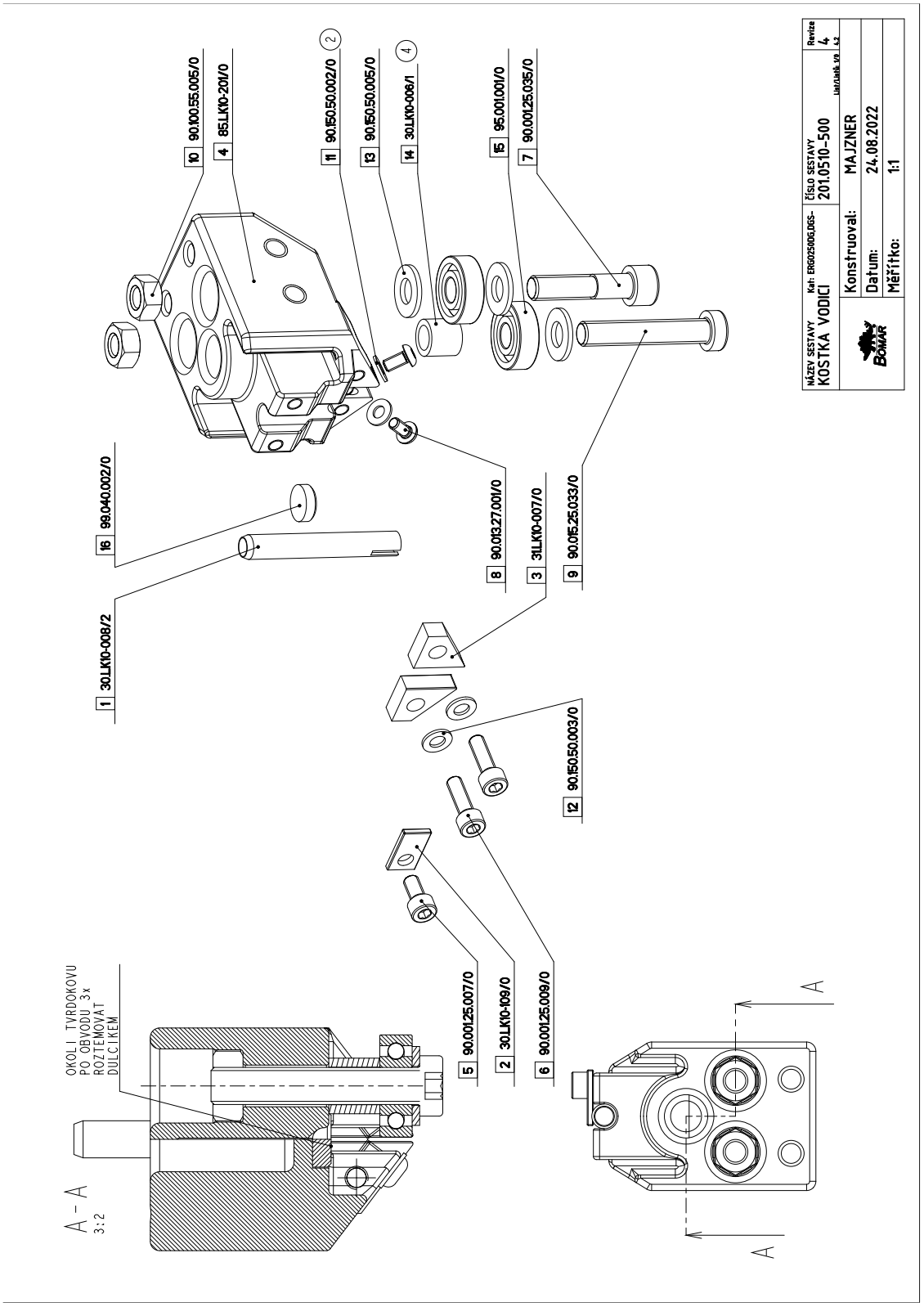

7.26. Kusovník / Piece list / Stückliste - Kostka vodící / Lead cube / Führungsklotz

NAZEV SESTAVY	CISLO SESTAVY	REVIZE
KOSTKA VODICI	201.0510-500	4

rpt.index

Poz.	Objednací číslo	Verze	Název CZ	Name EN	Name DE	Polotovar	Ks.
1	30.LK10-008	2	TRUBKA	TUBE	ROHR	TR8x1 - 55	1
2	30.LK10-109	0	PRILOZKA	CLIP	CLIP	P2 - 10x18	1
3	31.LK10-007	0	TVRDOKOV	HARD METAL	HM-SEGMENT	18x15	2
4	85.LK10-201	0	KOSTKA VODICI	GUIDING CUBE	FÜHRUNGSKLOTZ	Zinc Guiding Cube	1
5	90.001.25.007	0	SROUB IMBUS	HEXAGON SOCKET SCREW	IMBUSSCHRAUBE	5x10 DIN 912 8,8 černěný	1
6	90.001.25.009	0	SROUB IMBUS	HEXAGON SOCKET SCREW	IMBUSSCHRAUBE	5x16 DIN 912 8,8 černěný	2
7	90.001.25.035	0	SROUB IMBUS	HEXAGON SOCKET SCREW	IMBUSSCHRAUBE	8x35 DIN 912 8,8 černěný	1
8	90.013.27.001	0	SROUB PULKULATY	BUTTON HEAD SCREW	RUNDKOPFSCHRAUBE	4x8 ISO 7380 čern	2
9	90.015.25.033	0	SROUB IMBUS	HEXAGON SOCKET SCREW	IMBUSSCHRAUBE	8x45 DIN 7984 8.8 černěný	1
10	90.100.55.005	0	MATICE PRESNA ZINEK	PRECISION NUT - ZN	PRÄZISE MUTTER - ZN	8 DIN 934 8,8 Zn	2
11	90.150.50.002	0	PODLOZKA	WASHER	UNTERLEGSCHEIBE	4,3 M4 DIN 125 Zn	2
12	90.150.50.003	0	PODLOZKA	WASHER	UNTERLEGSCHEIBE	5,3 M5 DIN 125 Zn	2
13	90.150.50.005	0	PODLOZKA	WASHER	UNTERLEGSCHEIBE	8,4 M8 DIN 125 Zn	3
14	30.LK10-006	1	TRUBKA	TUBE	ROHR	TR12x2 - 13	1
15	95.001.001	0	LOZISKO	BEARING	LAGER	608 T3 CMB 2RS	2
16	99.040.002	0	TVRDOKOV	HARD METAL	HM-SEGMENT	12x4 43011201	1

1.ZRUS.SROUB M8x45 6HRANNY(90.005.55.020) A NAHR.M8x45 DIN7984(90.015.25.033). 286/ZM342 5.12.2012
2.ZRUS 90.005.55.018 A NAHR.90.001.25.035; ZRUS 90.101.55.001 A NAHR.90.100.55.005; 260/ZM432 29.11.2018 SCERBA
3.ZRUS SOUC 30.LK10-006 A NAHRAZ 91_200_030. 222/ZM298 17.10.2022 KVASNICKA
4.ZRUS.SOUC.91.020.030 A NAHR.30.LK10-006. 091/ZM127 18.5.2023 MACEL

Číslo Sestavy/Number of assembly/Nummer der Baugruppe; Ver.-Verze/Version/Version; Název sestavy/Assembly name/Name der Baugruppe;; Poz.-Pozice/Position/Position; Objednací číslo/Order number/Bestellnummer; Polotovar/Semiproduct/Halbfabrikat; Vstupní materiál(Vstupní mat.)/Default material/Eingangsmaterial;

7.27. Kostka vodící / Lead cube / Führungsklotz

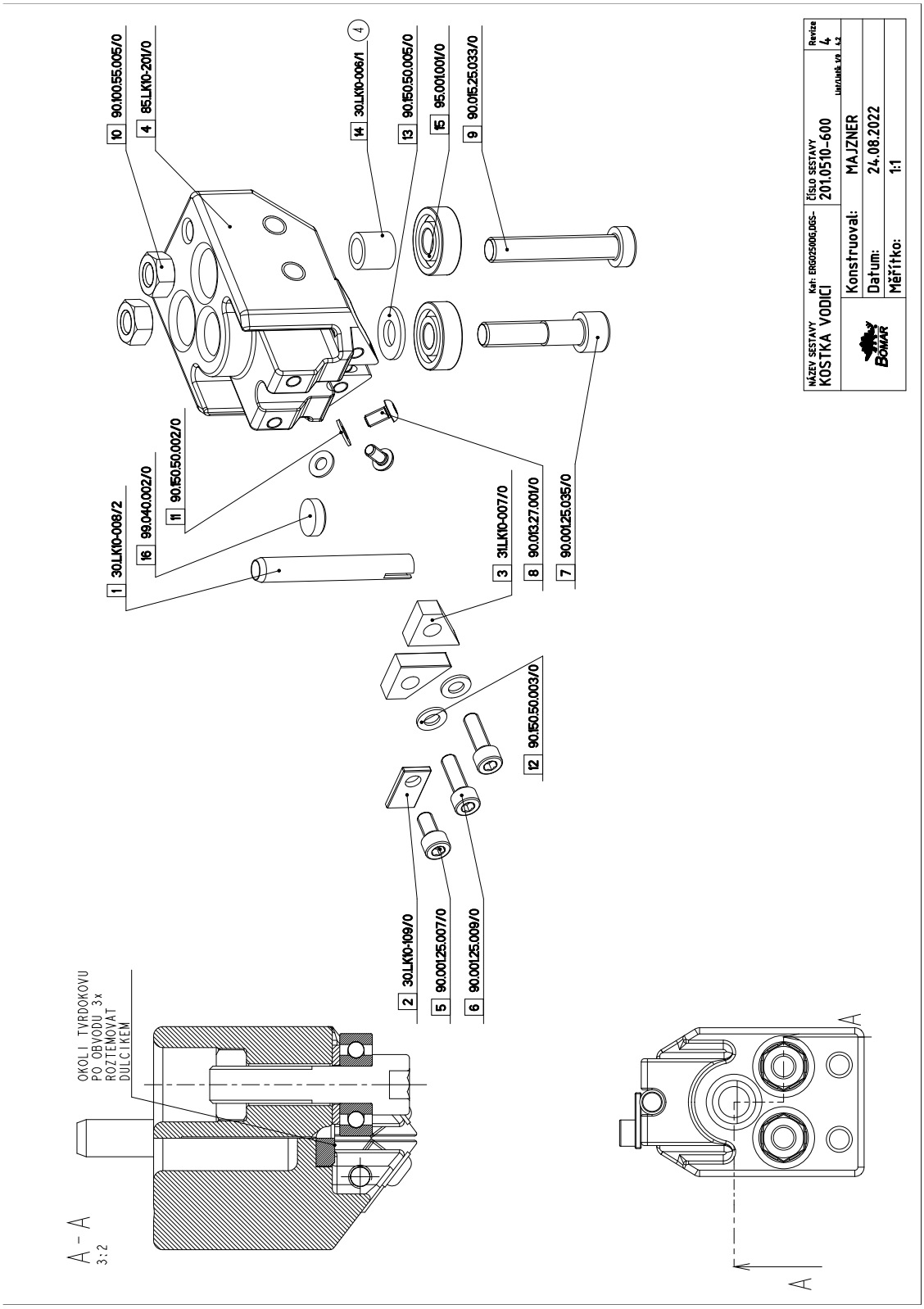

7.28. Kusovník / Piece list / Stückliste - Kostka vodící / Lead cube / Führungsklotz

NAZEV SESTAVY	CISLO SESTAVY	REVIZE
KOSTKA VODICI	201.0510-600	4

rpt.index

Poz.	Objednací číslo	Verze	Název CZ	Name EN	Name DE	Polotovar	Ks.
1	30.LK10-008	2	TRUBKA	TUBE	ROHR	TR8x1 - 55	1
2	30.LK10-109	0	PRILOZKA	CLIP	CLIP	P2 - 10x18	1
3	31.LK10-007	0	TVRDOKOV	HARD METAL	HM-SEGMENT	18x15	2
4	85.LK10-201	0	KOSTKA VODICI	GUIDING CUBE	FÜHRUNGSKLOTZ	Zinc Guiding Cube	1
5	90.001.25.007	0	SROUB IMBUS	HEXAGON SOCKET SCREW	IMBUSSCHRAUBE	5x10 DIN 912 8,8 černěný	1
6	90.001.25.009	0	SROUB IMBUS	HEXAGON SOCKET SCREW	IMBUSSCHRAUBE	5x16 DIN 912 8,8 černěný	2
7	90.001.25.035	0	SROUB IMBUS	HEXAGON SOCKET SCREW	IMBUSSCHRAUBE	8x35 DIN 912 8,8 černěný	1
8	90.013.27.001	0	SROUB PULKULATY	BUTTON HEAD SCREW	RUNDKOPFSCHRAUBE	4x8 ISO 7380 čern	2
9	90.015.25.033	0	SROUB IMBUS	HEXAGON SOCKET SCREW	IMBUSSCHRAUBE	8x45 DIN 7984 8.8 černěný	1
10	90.100.55.005	0	MATICE PRESNA ZINEK	PRECISION NUT - ZN	PRÄZISE MUTTER - ZN	8 DIN 934 8,8 Zn	2
11	90.150.50.002	0	PODLOZKA	WASHER	UNTERLEGSCHEIBE	4,3 M4 DIN 125 Zn	2
12	90.150.50.003	0	PODLOZKA	WASHER	UNTERLEGSCHEIBE	5,3 M5 DIN 125 Zn	2
13	90.150.50.005	0	PODLOZKA	WASHER	UNTERLEGSCHEIBE	8,4 M8 DIN 125 Zn	1
14	30.LK10-006	1	TRUBKA	TUBE	ROHR	TR12x2 - 13	1
15	95.001.001	0	LOZISKO	BEARING	LAGER	608 T3 CMB 2RS	2
16	99.040.002	0	TVRDOKOV	HARD METAL	HM-SEGMENT	12x4 43011201	1

1.ZRUS.SROUB M8x45 6HRANNY(90.005.55.020) A NAHR.M8x45 DIN7984(90.015.25.033). 286/ZM342 5.12.2012
2.ZRUS 90.005.55.018 A NAHR.90.001.25.035; ZRUS 90.101.55.001 A NAHR.90.100.55.005; 260/ZM432 29.11.2018 SCERBA
3.ZRUS SOUC 30.LK10-006 A NAHRAZ 91_200_030. 222/ZM298 17.10.2022 KVASNICKA
4.ZRUS.SOUC.91.020.030 A NAHR.30.LK10-006. 091/ZM127 18.5.2023 MACEL

Číslo Sestavy/Number of assembly/Nummer der Baugruppe; Ver.-Verze/Version/Version; Název sestavy/Assembly name/Name der Baugruppe;; Poz.-Pozice/Position/Position; Objednací číslo/Order number/Bestellnummer; Polotovar/Semiproduct/Halbfabrikat; Vstupní materiál(Vstupní mat.)/Default material/Eingangsmaterial;

7.29. Napínání / Tensioning / Spannung

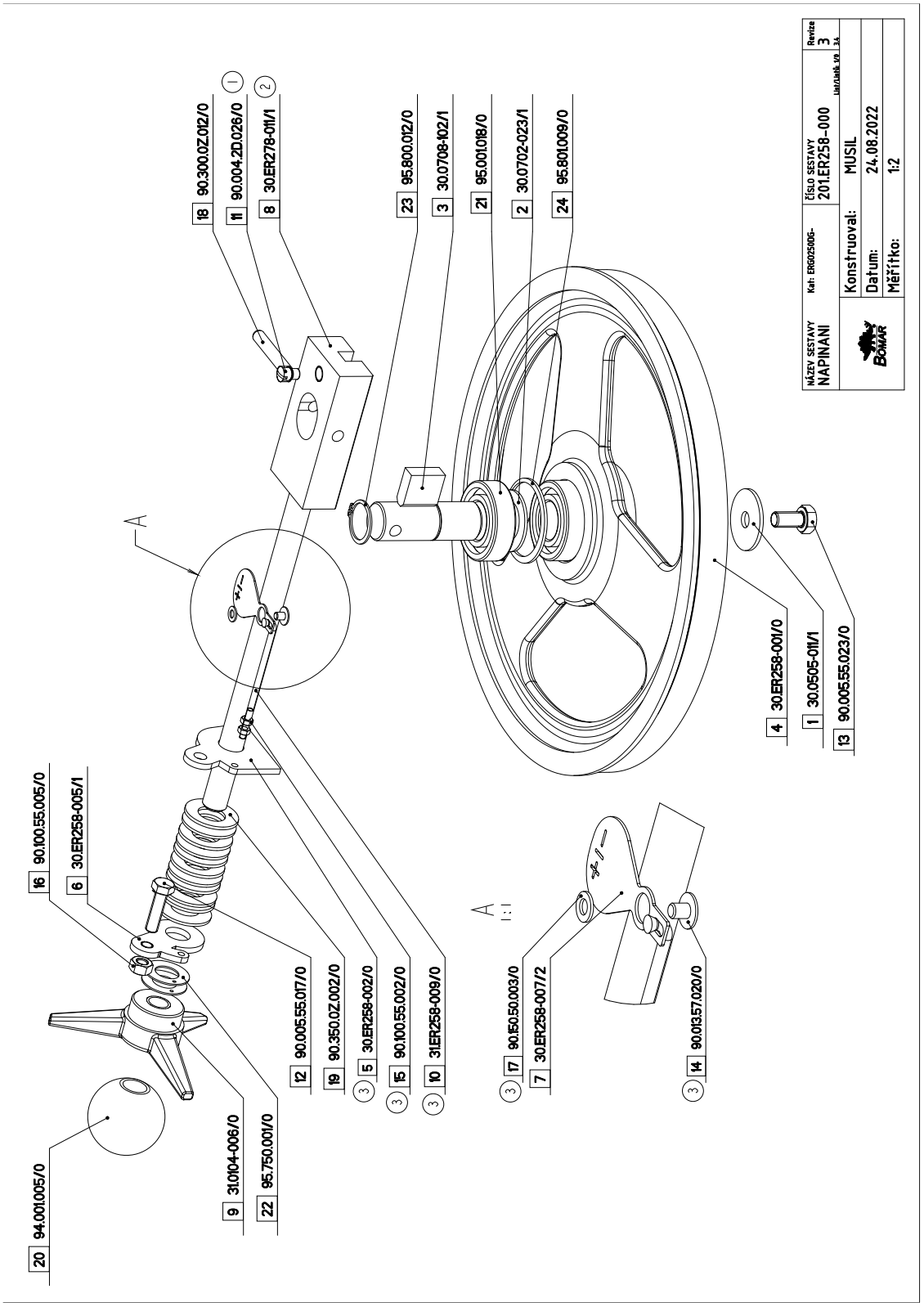

7.30. Kusovník / Piece list / Stückliste - Napínání / Tensioning / Spannung

NAZEV SESTAVY	CISLO SESTAVY	REVIZE
NAPINANI	201.ER258-000	3

Poz.	Objednací číslo	Verze	Název CZ	Name EN	Name DE	Polotovar	Ks.
1	30.0505-011	1	PODLOZKA	WASHER	UNTERLEGSCHEIBE	P2.5 - 40x40	1
2	30.0702-023	1	KROUZEK DISTANCNI	SPACER RING	DISTANZRING	P2 - 40x40	1
3	30.0708-102	1	CEP NAPINANI	TENSIONING PIVOT	SPANNUNGSBOLZEN		1
4	30.ER258-001	0	KOLO NAPINACI	TENSIONING WHEEL	SPANNRAD		1
5	30.ER258-002 (3)	0	DNO	BOTTOM	BODEN	P4 - 58x45	1
6	30.ER258-005	1	PRILOZKA	CLIP	CLIP	P4 - 42x60	1
7	30.ER258-007	2	STUPNICE	SCALE	SKALA	P1 - 41x55	1
8	30.ER278-011 (2)	1	VEDENI	GUIDE	FÜHRUNG		1
9	31.0104-006	0	HVEZDICE	STAR WHEEL	STERN	plast hvězdice M16	1
10	31.ER258-009 (3)	0	HACEK	HOOK	HÄKCHEN		1
11	90.004.2D.026 (1)	0	SROUB STAVECI	SET SCREW	STELLSCHRAUBE	10x14 DIN 915 černěn	1
12	90.005.55.017	0	SROUB 6HRANNY	HEX HEAD SCREW	SECHSKANTSCHRAUBE	8x30 DIN 933 8,8 Zn	1
13	90.005.55.023	0	SROUB 6HRANNY	HEX HEAD SCREW	SECHSKANTSCHRAUBE	10x20 DIN 933 8,8 Zn	1
14	90.013.57.020 (3)	0	SROUB PULKULATY	BUTTON HEAD SCREW	RUNDKOPFSCHRAUBE	5x6 ISO 7380 Zn s podl.	1
15	90.100.55.002 (3)	0	MATICE PRESNA ZINEK	PRECISION NUT - ZN	PRÄZISE MUTTER - ZN	4 DIN 934 8,8 Zn	2
16	90.100.55.005	0	MATICE PRESNA ZINEK	PRECISION NUT - ZN	PRÄZISE MUTTER - ZN	8 DIN 934 8,8 Zn	1
17	90.150.50.003 (3)	0	PODLOZKA	WASHER	UNTERLEGSCHEIBE	5,3 M5 DIN 125 Zn	1
18	90.300.0Z.012	0	KOLIK VALCOVY KALENY	CYLINDRICAL PIN HARDENED	ZYLINDERSTIFT GEHÄRTET	8x50 DIN 6325	1
19	90.350.0Z.002	0	PRUZINA TALIROVA	DISC SPRING	TELLERFEDER	35,5x18,3x2,0x2,8 DIN 2093	11
20	94.001.005	0	RUKOJET	HANDLE	GRIFF	M16 průměr 50 V403 - 64 114090177	1
21	95.001.018	0	LOZISKO	BEARING	LAGER	6205 2RS T3 CMB 2RS	2
22	95.750.001	0	KROUZEK KU	TEFLON BEARING	GLEILAGER BUCHSEN	16x1,5 vnejší průměr 30mm, A16KU	2
23	95.800.012	0	KROUZEK POJIST.VNEJS	EXTERNAL RETAINING RING	SICHERUNGSRING AUßEN	d25 DIN 471	1
24	95.801.009	0	KROUZEK POJIST.VNITR	INERNAL RETAINING RING	SICHERUNGSRING INNEN	d52 DIN 472	1

1.ZRUS.SROUB M8x10 90.004.2D.007 A NAHR. M10x14 90.004.2D.026. 169/ZM237 13.7.2017 CERNY
2.ZRUS.30.ER258-011 A NAHR.30.ER278-011 177/ZM295 23.8.2018 SCERBA
3.ZRUS.SROUB 90.014.50.008;ZRUS.DRZAK 30.ER258-004 A NAHR.30.ER258-002;ZRUS.TAHLO 30.ER258-006 A NAHR.31.ER258-009;ZRUS.MATICE 90.100.55.004 A NAHR.90.100.55.002;ZRUS. 30.ER258-008, 90.001.25.028 A NAHR. 90.150.003 A 90.013.57.020 281/ZM053 8.3.2023 JAGNESAK

Číslo Sestavy/Number of assembly/Nummer der Baugruppe; Ver.-Verze/Version/Version; Název sestavy/Assembly name/Name der Baugruppe;; Poz.-Pozice/Position/Position; Objednací číslo/Order number/Bestellnummer; Polotovar/Semiproduct/Halbfabrikat; Vstupní materiál(Vstupní mat.)/Default material/Eingangsmaterial;

7.31. Válec zvedací / Lifting cylinder / Hebezylinder

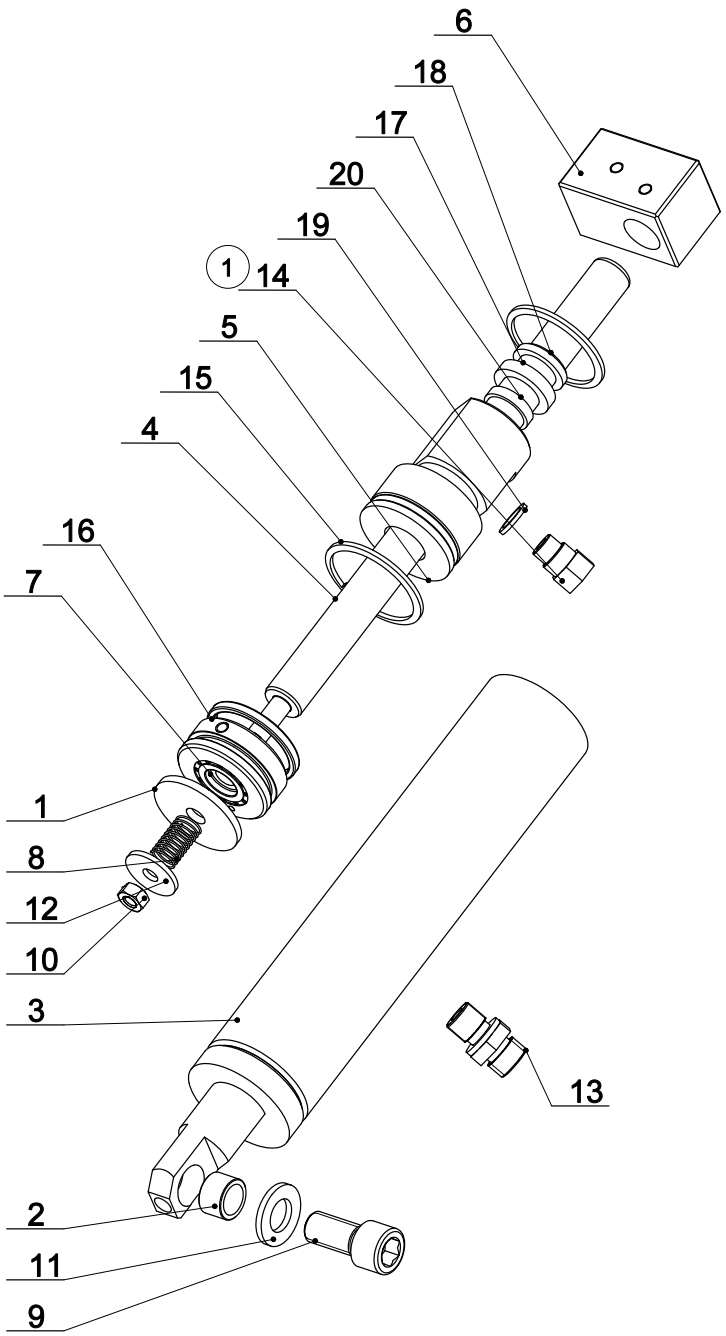

NAZEV SESTAVY	CISLO SESTAVY	STROJ
VALEC ZVEDACI	201.ER257-110	ERG.258/278DG

BOMAR s.r.o.	Konstruoval: KIRST
	Datum: 02. 09.2019
	Meritko: 1:2

7.32. Kusovník / Piece list / Stückliste - Válec zvedací / Lifting cylinder / Hebezylinder

Cislo Sestavy	Ver.	Nazev sestavy
201.ER257-110	0	VALEC ZVEDACI/LIFTING CYLINDER/HEBEZYLINDER

Poz.	Objednaci cislo	Ver.	Nazev polozky	Rozmer	Ks
1	30.0507-007	0	KLAPKA / FLAP / KLAPPE	P 3x37	1
2	30.0507-913	0	POUZDRO / SLEEVE / BÜCHSE	d 16	1
3	30.ER257-111	0	VALEC UPINACI / FIXING CYLINDER / SPANNZYLINDER		1
4	30.ER257-112	0	PISTNICE / PISTON ROD / KOLBENSTANGE	D 16f8	1
5	30.ER257-113	0	VIKO / COVER / DECKEL	D 42	1
6	30.LC07-002	0	DRZAK / HOLDER / HALTER	HR 30x30	1
7	30.LC07-106	0	PIST / PISTON / KOLBEN	ODLITEK	1
8	31.0707-014	0	PRUZINA / SPRING / FEDER	0.63x10x20x9.5	1
9	90.001.25.057	0	SROUB IMBUS / HEXAGON SOCKET SCREW / IMBUSSCHRAUBE	M12x25	1
10	90.100.55.004	0	MATICE PRESNA ZINEK / PRECISION NUT - ZN / PRÄZISE MUTTER - ZN	MATICE _ M6	1
11	90.150.50.007	0	PODLOZKA / WASHER / UNTERLEGSCHEIBE	PODLOZKA 13	1
12	90.151.50.004	0	PODLOZKA VELKOPL. / LARGE WASHER / GRO&FLÄCHENSCHEIBE	PODLOZKA 6	1
13	92.002.001	0	SROUBENI PRIME / TUBE FITTING - STRAIGHT / GERADE VERSCHRAUBUNG	G 1/4"	1
14	93.012.039 (1)	0	SROUBENI PRIME / TUBE FITTING - STRAIGHT / GERADE VERSCHRAUBUNG		1
15	95.801.005	0	KROUZEK POJIST.VNITR / INERNAL RETAINING RING / SICHERUNGSRING INNEN	POJISTNY KROUZEK 40	2
16	96.002.017	0	O-KROUZEK DYNAMICKY / O-RING DYNAMIC / O-RING DYNAMISCH	34x3 NBR 70SH	2
17	96.041.001	0	MANZETA / CUFF / MANSCHETTE	d16	1
18	96.060.001	0	KROUZEK STIRACI / WIPER RING / ABSTREIFRING	KROUZEK STIRACI 16	1
19	96.082.001	0	KROUZEK TESNICI / SEALING RING / DICHTUNGSRING	10/14x1.5 CU	1
20	96.084.008	0	KROUZEK VODICI / GUIDE RING / FÜHRUNGSRING	GR4300160	1

1.ZRUS. 1x REDUKCE 30.3407-103 A NAHR. SROUBENIM 93.012.039.323/ZM431 23.11.2021 KOVAR

Cislo Sestavy/Number of assembly/Nummer der Baugruppe; Verze (Ver.)/Version/Version; Nazev sestavy/Assembly title/Name der Baugruppe; Pozice (Poz.)/Position/Position;
Objednaci cislo/Purchase order number/Bestellnummer; Nazev polozky/Volume title/Name der Position; Rozmer/Stock size/Abmessung

7.33. Stůl / Table / Tisch

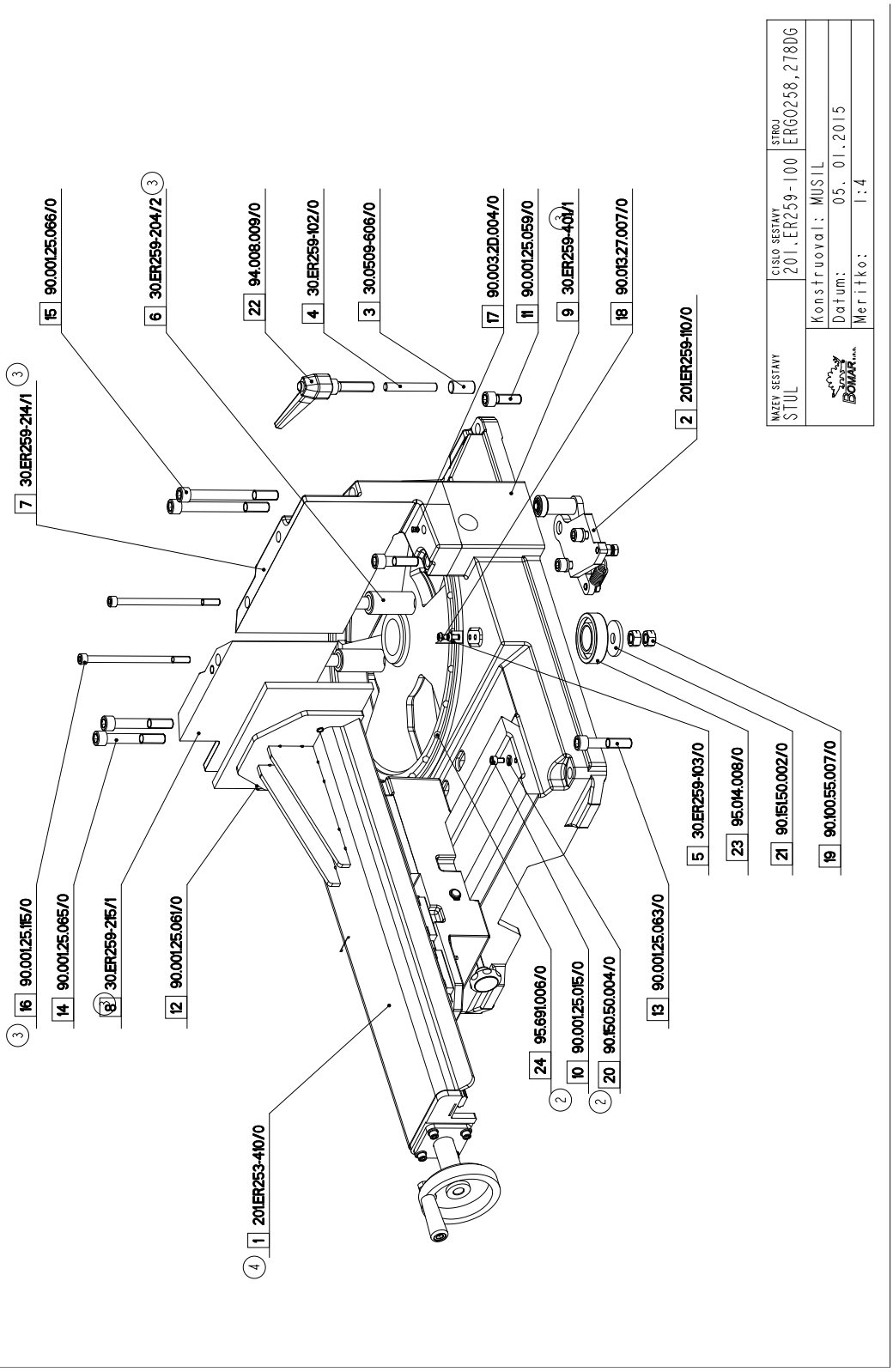

7.34. Kusovník / Piece list / Stückliste - Stůl / Table / Tisch

NAZEV SESTAVY	CISLO SESTAVY	REVIZE
STUL	201.ER259-100	4

Poz.	Objednací číslo	Verze	Název CZ	Name EN	Name DE	Polotovar	Ks.
1	201.ER253-410	0	SVERAK	VICE	SCHRAUBSTOCK		1
2	201.ER259-110	0	DORAZ	STOP PIECE	ANSCHLAG		1
3	30.0509-606	0	VALECEK	ROLLER	ROLLE	D15 - 30	1
4	30.ER259-102	0	TYC	POLE	STANGE	D10 - 69	1
5	30.ER259-103	0	UKAZATEL	INDICATOR	ZEIGER	P1 - 15x54	1
6	30.ER259-204	2	CEP	PIVOT	BOLZEN	D28 - 109	2
7	30.ER259-214	1	CELIST	JAW	BACKE		1
8	30.ER259-215	1	CELIST	JAW	BACKE		1
9	30.ER259-401	1	STUL	TABLE	TISCH		1
10	90.001.25.015	0	SROUB IMBUS	HEXAGON SOCKET SCREW	IMBUSSCHRAUBE	6x10 DIN 912 8,8 černěný	2
11	90.001.25.059	0	SROUB IMBUS	HEXAGON SOCKET SCREW	IMBUSSCHRAUBE	12x35 DIN 912 8,8 černěný	2
12	90.001.25.061	0	SROUB IMBUS	HEXAGON SOCKET SCREW	IMBUSSCHRAUBE	12x45 DIN 912 8,8 černěný	2
13	90.001.25.063	0	SROUB IMBUS	HEXAGON SOCKET SCREW	IMBUSSCHRAUBE	12x60 DIN 912 8,8 černěný	2
14	90.001.25.065	0	SROUB IMBUS	HEXAGON SOCKET SCREW	IMBUSSCHRAUBE	12x80 DIN 912 8,8 černěný	2
15	90.001.25.066	0	SROUB IMBUS	HEXAGON SOCKET SCREW	IMBUSSCHRAUBE	12x120 DIN 912 8,8 černěný	2
16	90.001.25.115	0	SROUB IMBUS	HEXAGON SOCKET SCREW	IMBUSSCHRAUBE	8x140 DIN 912 8,8 černěný	2
17	90.003.2D.004	0	SROUB STAVECI	SET SCREW	STELLSCHRAUBE	6x10 DIN 914 černěn	1
18	90.013.27.007	0	SROUB PULKULATY	BUTTON HEAD SCREW	RUNDKOPFSCHRAUBE	6x10 ISO 7380 čern	2
19	90.100.55.007	0	MATICE PRESNA ZINEK	PRECISION NUT - ZN	PRÄZISE MUTTER - ZN	12 DIN 934 8,8 Zn	2
20	90.150.50.004	0	PODLOZKA	WASHER	UNTERLEGSCHEIBE	6,4 M6 DIN 125 Zn	2
21	90.151.50.002	0	PODLOZKA VELKOPL.	LARGE WASHER	GROßFLÄCHENSCHEIBE	13,5x44x4 M12 DIN 440 Zn	1
22	94.008.009	0	PAKA MONTAZNI	ASSEMBLY LEVER	MONTAGEHEBEL	M12x50 Elesa MRX.80 p	1
23	95.014.008	0	LOZISKO	BEARING	LAGER	7206 čína T3 - Čína	1
24	95.691.006	0	KULICKA LOZISKA	BALL	KUGEL	KC 8,000 G40	25

Číslo Sestavy/Number of assembly/Nummer der Baugruppe; Ver.-Verze/Version/Version; Název sestavy/Assembly name/Name der Baugruppe;; Poz.-Pozice/Position/Position; Objednací číslo/Order number/Bestellnummer; Polotovar/Semiproduct/Halbfabrikat; Vstupní materiál(Vstupní mat.)/Default material/Eingangsmaterial;

7.35. Svěrák / Vice / Schraubstock

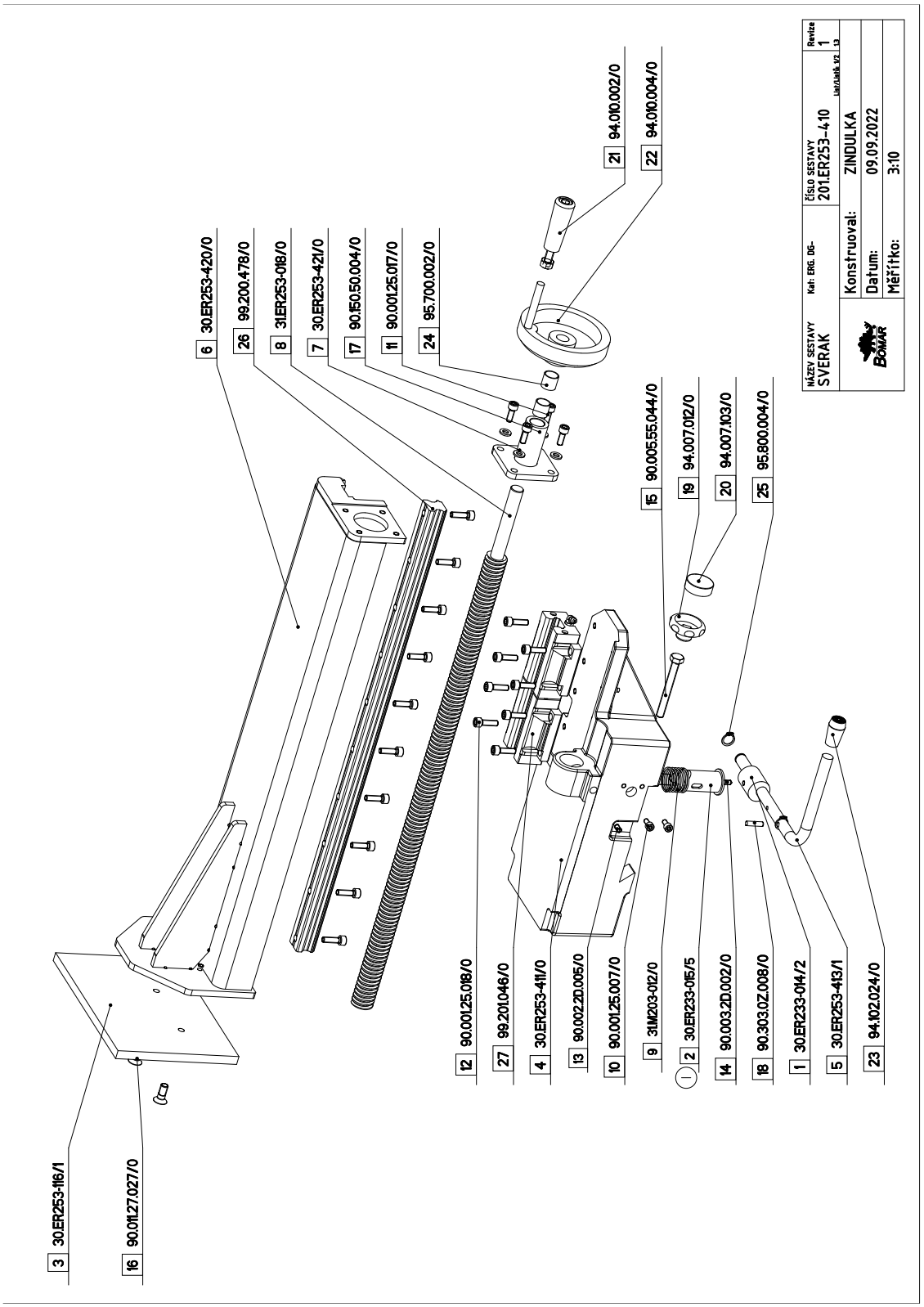

7.36. Kusovník / Piece list / Stückliste - Svěrák / Vice / Schraubstock

NAZEV SESTAVY	CISLO SESTAVY	REVIZE
SVERAK	201.ER253-410	1

Poz.	Objednací číslo	Verze	Název CZ	Name EN	Name DE	Polotovar	Ks.
1	30.ER233-014	2	EXCENTR	EXCENTR	EXZENTER	D25 - 32	1
2	30.ER233-015 (1)	5	CEP	PIVOT	BOLZEN	D30 - 102	1
3	30.ER253-116	1	DESKA	BOARD	PLATTE	HR200x10 - 144	1
4	30.ER253-411	0	TELESO SVERAKU	VICE BODY	SCHRAUBSTOCKKÖRPER		1
5	30.ER253-413	1	TYC	POLE	STANGE	D12 - 292	1
6	30.ER253-420	0	CELIST	JAW	BACKE		1
7	30.ER253-421	0	POUZDRO	SLEEVE	BÜCHSE		1
8	31.ER253-018	0	TRAPEZ	TRAPEZOIDAL THREAD BOLT	TRAPEZGEWINDESPINDEL	Tr24x5x655 R pravy -- dle výkresu	1
9	31.M203-012	0	PRUZINA	SPRING	FEDER	1,5x25x47x7,5	1
10	90.001.25.007	0	SROUB IMBUS	HEXAGON SOCKET SCREW	IMBUSSCHRAUBE	5x10 DIN 912 8,8 černěný	2
11	90.001.25.017	0	SROUB IMBUS	HEXAGON SOCKET SCREW	IMBUSSCHRAUBE	6x16 DIN 912 8,8 černěný	4
12	90.001.25.018	0	SROUB IMBUS	HEXAGON SOCKET SCREW	IMBUSSCHRAUBE	6x20 DIN 912 8,8 černěný	18
13	90.002.2D.005	0	SROUB STAVECI	SET SCREW	STELLSCHRAUBE	5x10 DIN 913 45H černěn	1
14	90.003.2D.002	0	SROUB STAVECI	SET SCREW	STELLSCHRAUBE	5x10 DIN 914 černěn	1
15	90.005.55.044	0	SROUB 6HRANNY	HEX HEAD SCREW	SECHSKANTSCHRAUBE	8x70 DIN 933 8,8 Zn	1
16	90.011.27.027	0	SROUB ZAPUSTNY	COUNTERSUNK SCREW	SENKSCHRAUBE	8x20 DIN 7991 10,9 černěný	2
17	90.150.50.004	0	PODLOZKA	WASHER	UNTERLEGSCHEIBE	6,4 M6 DIN 125 Zn	4
18	90.303.0Z.008	0	KOLIK PRUZNY BEZ PU	FLEXIBLE PIN WITHOUT SURF. TREATMENT	SPANNSTIFT OHNE OBERFLÄCHENBEHANDLUNG	DIN 1481	1
19	94.007.012	0	SROUB PLASTOVY	PLASTIC BOLT	KUNSTSTOFFSCHRAUBE	M8 průměr 40mm	1
20	94.007.103	0	KRYT	COVER	ABDECKUNG	M8 průměr 40 k 94.007.012	1
21	94.010.002	0	RUKOJET KOMPLETNI	COMPLETE HANDLE	KOMPLETTER GRIFF	plast. rukojeť kompletní M8	1
22	94.010.004	0	KOLO	WHEEL	RAD	100 d14H7	1
23	94.102.024	0	ZATKA	PLUGBLIND PLUG	BLINDSTOPFEN	12x31x24 černá kulatá ferule pro vysoké namáhání	1
24	95.700.002	0	POUZDRO	SLEEVE	BÜCHSE	14x15	2
25	95.800.004	0	KROUZEK POJIST.VNEJS	EXTERNAL RETAINING RING	SICHERUNGSRING AUßEN	d12 DIN 471	2
26	99.200.478	0	VEDENI LINEARNI	LINEAR GUIDE	LINEARE FÜHRUNG	MSA25R 560 E=10	1
27	99.201.046	0	VOZIK LINEARNIHO VEDENI	LINEAR GUIDE CART	LINEARFÜHRUNGSWAGEN	MSA25ESSF1N	2

I.ZRUS. CEP 30.ER253-416 A NAHR. 30.ER233-015 039/ZM082 29.03.2023 OSTRIZEK

Číslo Sestavy/Number of assembly/Nummer der Baugruppe; Ver.-Verze/Version/Version; Název sestavy/Assembly name/Name der Baugruppe;; Poz.-Pozice/Position/Position; Objednací číslo/Order number/Bestellnummer; Polotovar/Semiproduct/Halbfabrikat; Vstupní materiál(Vstupní mat.)/Default material/Eingangsmaterial;

7.37. Doraz / Stop piece / Anschlag

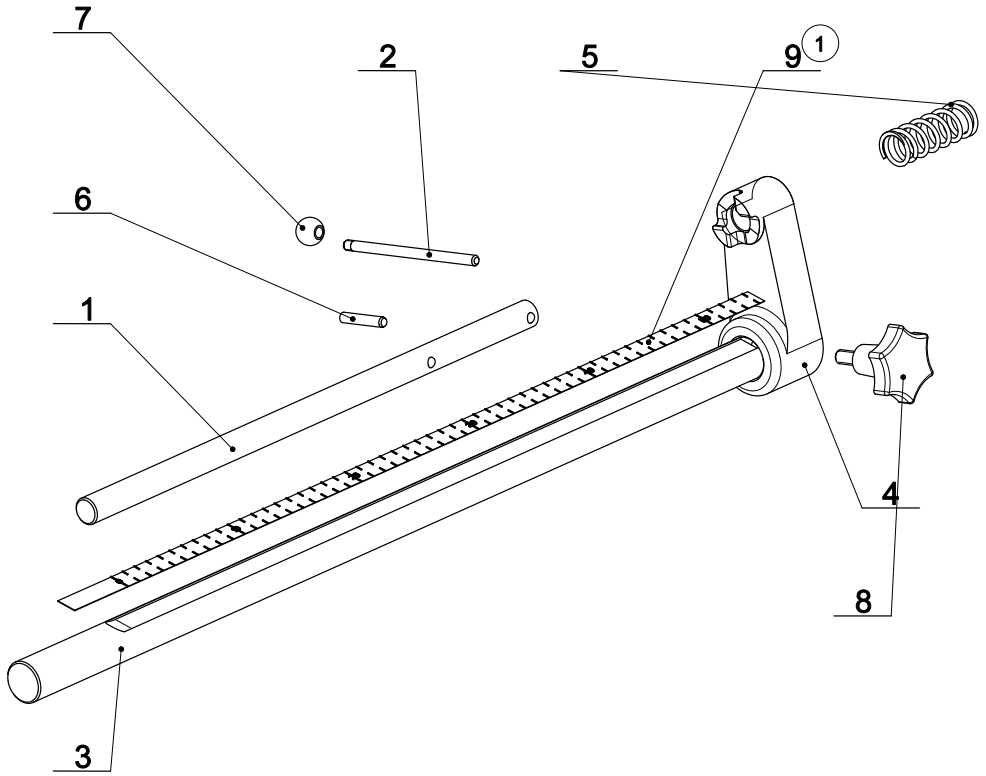

NAZEV SESTAVY	CISLO SESTAVY	STROJ
DORAZ	201.ER259-120	ERG250DGS

BOMAR s.r.o.	Konstruoval: HLADIL
	Datum: 23. 10.2017
	Meritko: 33:100

7.38. Kusovník / Piece list / Stückliste - Doraz / Stop piece / Anschlag

Cislo Sestavy	Ver.	Nazev sestavy
201.ER259-120	0	DORAZ/STOP PIECE/ANSCHLAG

Poz.	Objednaci cislo	Ver.	Nazev polozky	Rozmer	Ks
1	30.0514-601	0	DORAZ / STOP PIECE / ANSCHLAG	d 16	1
2	30.0703-016	0	PAKA / LEVER / HEBEL	d6	1
3	30.0703-010.A	0	TYC DORAZU / STOP POLE / ANSCHLAGSTANGE	d 25	1
4	30.ER259-123	0	TELESO DORAZU / STOP BODY / ANSCHLAGKÖRPER	ODLITEK	1
5	31.0304-013	0	PRUZINA / SPRING / FEDER	2.5x21.5x60x6+2	1
6	90.300.0Z.006	0	KOLIK VALCOVY KALENY / CYLINDRICAL PIN HARDENED / ZYLINDERSTIFT GEHÄRTET	KOLIK 6X32	1
7	94.001.001	0	RUKOJET / HANDLE / GRIFF	M6 PRUMER 16	1
8	94.006.001	0	SROUB PLAST.HVEZDICE / PLASTIC STAR BOLT / KUNSTSTOFF-STERNSCHRAUBE	M8x17	1
9	99.120.001 (1)	0	PRAVITKO / RULER / SKALENBANDMAß	0,5m	1

1.PRIDANO PRAVITKO 99.120.001. 135/ZM173 7.6.2016 SLEZACKOVA

Cislo Sestavy/Number of assembly/Nummer der Baugruppe; Verze (Ver.)/Version/Version; Nazev sestavy/Assembly title/Name der Baugruppe; Pozice (Poz.)/Position/Position;
Objednaci cislo/Purchase order number/Bestellnummer; Nazev polozky/Volume title/Name der Position; Rozmer/Stock size/Abmessung

7.39. Doraz / Stop piece / Anschlag

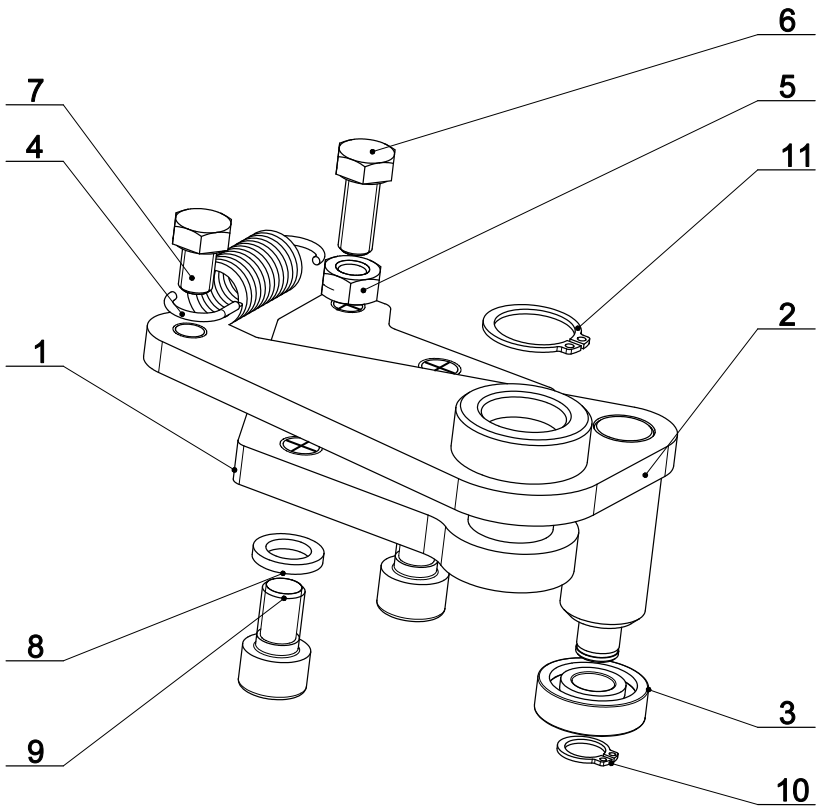

NAZEV SESTAVY	CISLO SESTAVY	STROJ
DORAZ	201.ER259-110	ERG250

BOMAR s.r.o.	Konstruoval: MUSIL
	Datum: 03. 04.2018
	Meritko: 4:5

7.40. Kusovník / Piece list / Stückliste - Doraz / Stop piece / Anschlag

Cislo Sestavy	Ver.	Nazev sestavy
201.ER259-110	0	DORAZ/STOP PIECE/ANSCHLAG

Poz.	Objednaci cislo	Ver.	Nazev polozky	Rozmer	Ks
1	30.ER259-112	0	DRZAK / HOLDER / HALTER		1
2	30.ER259-113	0	TYC DORAZU / STOP POLE / ANSCHLAGSTANGE		1
3	95.001.004	0	LOZISKO / BEARING / LAGER	6000 2RS	1
4	31.K303-021	0	PRUZINA / SPRING / FEDER	2.0x16x53x13.5	1
5	90.100.55.005	0	MATICE PRESNA ZINEK / PRECISION NUT - ZN / PRÄZISE MUTTER - ZN	MATICE _ M8	1
6	90.005.55.015	0	SROUB 6HRANNY / HEX HEAD SCREW / SECHSKANTSCHRAUBE	SROUB M8X20	1
7	90.005.55.013	0	SROUB 6HRANNY / HEX HEAD SCREW / SECHSKANTSCHRAUBE	SROUB M8X12	1
8	90.163.00.004	0	PODLOZKA / WASHER / UNTERLEGSCHEIBE	NORD-LOCK	2
9	90.001.25.045	0	SROUB IMBUS / HEXAGON SOCKET SCREW / IMBUSSCHRAUBE	M10X16	2
10	95.800.003	0	KROUZEK POJIST.VNEJS / EXTERNAL RETAINING RING / SICHERUNGSRING AUßEN	POJISTNY KROUZEK 10	1
11	95.800.009	0	KROUZEK POJIST.VNEJS / EXTERNAL RETAINING RING / SICHERUNGSRING AUßEN	POJISTNY KROUZEK 20	1

Cislo Sestavy/Number of assembly/Nummer der Baugruppe; Verze (Ver.)/Version/Version; Nazev sestavy/Assembly title/Name der Baugruppe; Pozice (Poz.)/Position/Position;
Objednaci cislo/Purchase order number/Bestellnummer; Nazev polozky/Volume title/Name der Position; Rozmer/Stock size/Abmessung

8. Výkresy sestav pro objednání náhradních dílů – volitelné vybavení / Zeichnungen für Bestellung der Ersatzteile - optionale Zubehör / Drawing assemblies for spare parts order – optional accessories

- Při objednávání náhradních dílů vždy uvádějte: typ stroje (např. Ergonomic 320.258 DG), výrobní číslo (např. 125) a rok výroby (např. 1999).

- In die Bestellung der Ersatzteile führen Sie immer an: Maschinentyp (z. B. Ergonomic 320.258 DG), Serien Nr. (z. B. 125) und Baujahr (z. B. 1999).

- For spare parts order, you must always to allege: type of machine (for example Ergonomic 320.258 DG), serial number (for example 125, see cover page) and year of construction (for example 1999).

8.1. Odměřování / Measuring / Gehrungsmessung

Cislo Sestavy
201.ER2518-000

Ver.
0

Nazev sestavy
ODMEROVANI/MEASURING/GEHRUNGSMESSUNG

Poz.	Objednaci cislo	Ver.	Nazev polozky	Rozmer	Ks
1	30.1226-007	1	STERAC / WIPER / ABSTREIFER	BA 18	2
2	30.ER2518-002	0	LISTA / SLAT / LEISTE	HR 18x6	1
3	30.ER2518-005	0	DRZAK / HOLDER / HALTER	P2x108	1
4	30.ER2518-006	0	TYC / POLE / STANGE	HR 70x8	1
5	30.M220-005	0	DRZAK / HOLDER / HALTER	P 2x142	1
6	55.800.009	0	PLANZETA / null / null	P 0,3x15	1
7	90.013.27.003	0	SROUB PULKULATY / BUTTON HEAD SCREW / RUNDKOPFSCHRAUBE	M5X10	2
8	91.270.018	0	SNIMAC MAGNET. / MAGNETIC SENSOR / MAGNETSENSOR	IZ16E-000-1-01,6-0	1
9	91.271.005	0	PASKA MAGNETICKA / MAGNETIC TAPE / MAGNETBAND	ELGO MB20-25	1

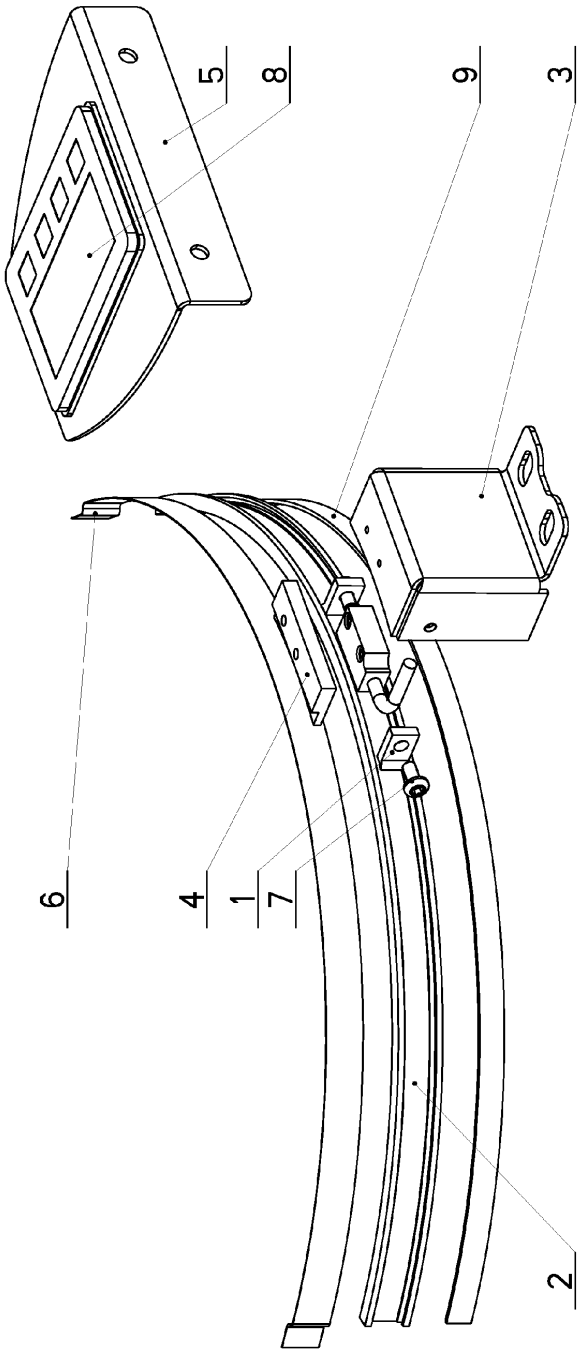

Cislo Sestavy/Number of assembly/Nummer der Baugruppe; Verze (Ver.)/Version/Version; Nazev sestavy/Assembly title/Name der Baugruppe; Pozice (Poz.)/Position/Position;
Objednaci cislo/Purchase order number/Bestellnummer; Nazev polozky/Volume title/Name der Position; Rozmer/Stock size/Abmessung

8.2. Laser-ukazovátko / Laser-Liner / Laser Liner

Cislo Sestavy	Ver.	Nazev sestavy
202.9121-000	0	LASER-UKAZOVATKO/LASER - LINER/LASER - LINER

Poz.	Objednaci cislo	Ver.	Nazev polozky	Rozmer	Ks
1	30.9204-007	1	DRZAK / HOLDER / HALTER		1
2	202.5012-000	0	LASER-UKAZOVATKO / LASER - LINER / LASER - LINER		1

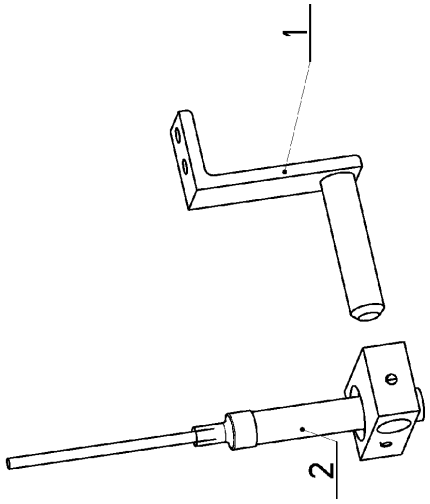

Cislo Sestavy/Number of assembly/Nummer der Baugruppe; Verze (Ver.)/Version/Version; Nazev sestavy/Assembly title/Name der Baugruppe; Pozice (Poz.)/Position/Position;
Objednaci cislo/Purchase order number/Bestellnummer; Nazev polozky/Volume title/Name der Position; Rozmer/Stock size/Abmessung

8.3. Upínání horní / Top clam / Spannvorrichtung oben

Cislo Sestavy
201.ER2514-110

Ver.
0

Nazev sestavy
UPINANI HORNI/TOP CLAMPING/SPANNVORRICHTUNG OBEN

Poz.	Objednaci cislo	Ver.	Nazev polozky	Rozmer	Ks
1	201.ER257-020	0	UPINANI HORNI / TOP CLAMPING / SPANNVORRICHTUNG OBEN		1
2	30.2114-315	0	VEDENI / GUIDE / FÜHRUNG	HR 50x50	1
3	30.ER2514-111	0	CELIST / JAW / BACKE	HR 150x12	1
4	30.ER2514-112	0	DESKA / BOARD / PLATTE	HR 80x20	1
5	30.ER2514-116	0	TYC / POLE / STANGE	d 20	2
6	90.001.25.047	0	SROUB IMBUS / HEXAGON SOCKET SCREW / IMBUSSCHRAUBE	M10X25	1
7	90.005.55.028	0	SROUB GHRANNY / HEX HEAD SCREW / SECHSKANTSCHRAUBE	SROUB M10X50	1
8	95.800.009	0	KROUZEK POJIST.VNEJS / EXTERNAL RETAINING RING / SICHERUNGSRING AUßEN	POJISTNY KROUZEK 20	4

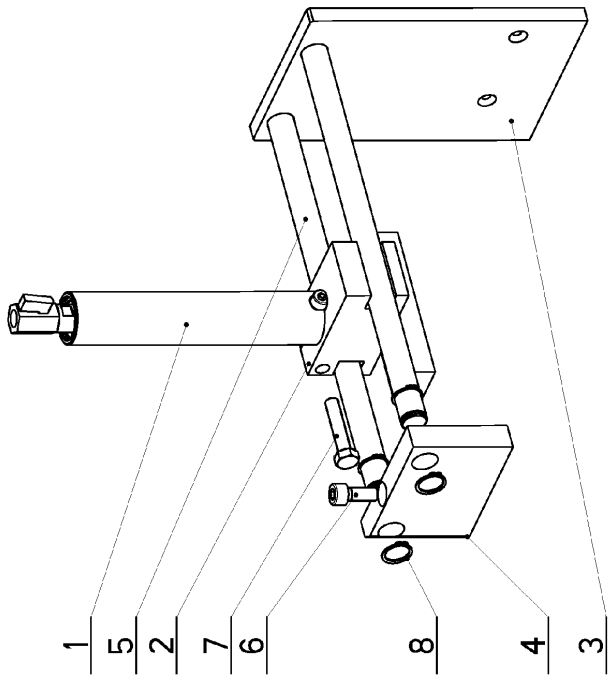

Cislo Sestavy/Number of assembly/Nummer der Baugruppe; Verze (Ver.)/Version/Version; Nazev sestavy/Assembly title/Name der Baugruppe; Pozice (Poz.)/Position/Position;
Objednaci cislo/Purchase order number/Bestellnummer; Nazev polozky/Volume title/Name der Position; Rozmer/Stock size/Abmessung

!!! POZOR !!! Objednávejte dle skutečných součástí na stroji

!!! ACHTUNG !!! Auftrag entsprechend den tatsächlichen teile auf der maschine

!!! ATTENTION !!! Order according to the actual parts on the machine

9. Volitelné vybavení
Kostka vodicí/
Optionale Zubehör
Führungsklotz/
Optional accessories
Lead cube

9.1. Rameno / Saw arm / Sägerahmen

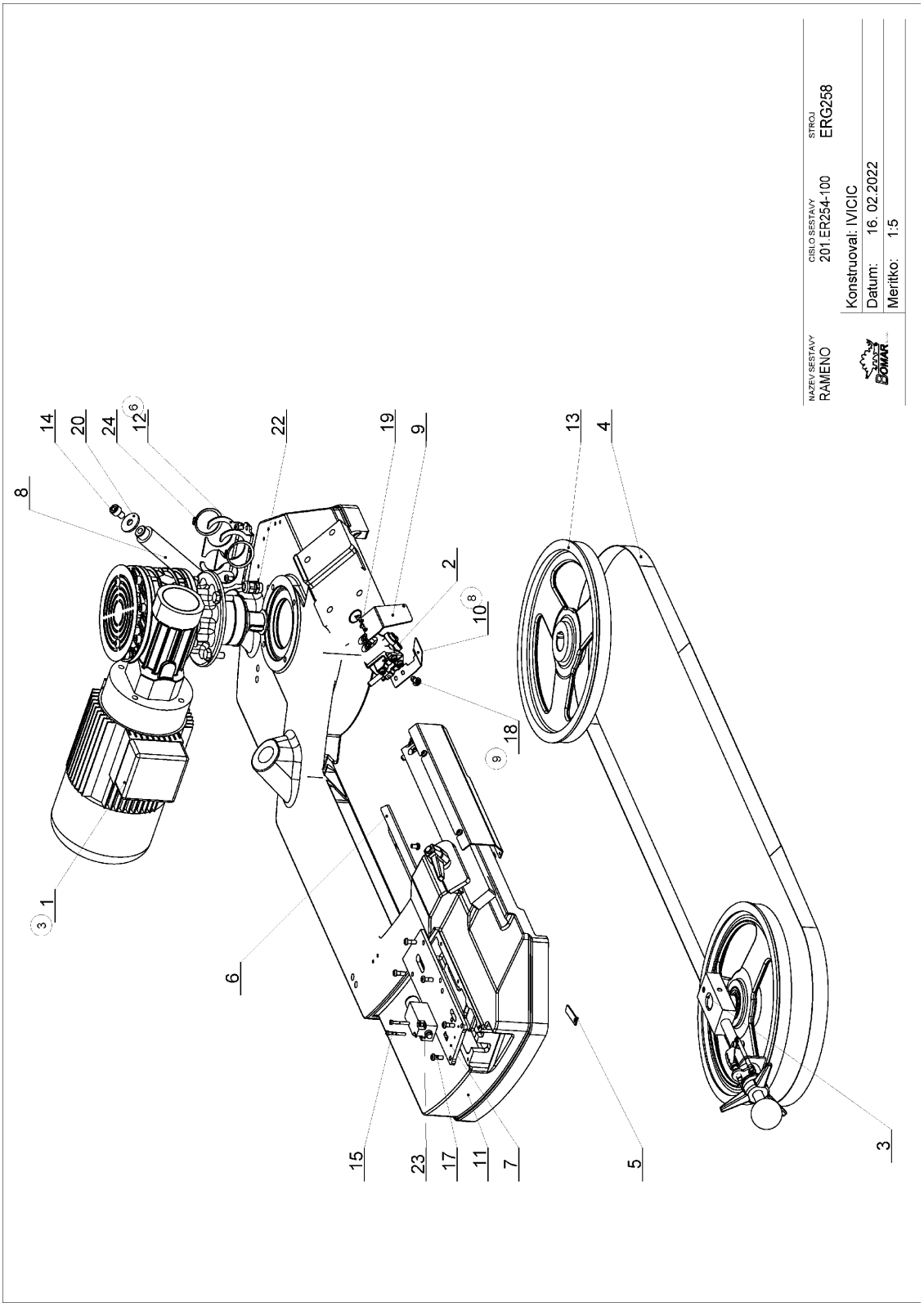

9.2. Kusovník / Piece list / Stückliste - Rameno / Saw arm / Sägerahmen

Cislo Sestavy	Ver.	Nazev sestavy
201.ER254-100	0	RAMENO/BEAM/RAHMEN

Poz.	Objednaci cislo	Ver.	Nazev polozky	Rozmer	Ks
1	201.ER255-100 (3)	0	POHON / DRIVE / ANTRIEB		1
2	201.ER256-000	0	VEDENI PASU / SAW BAND GUIDE / SÄGEBANDFÜHRUNG		1
3	201.ER258-000	0	NAPINANI / TENSIONING / SPANNUNG		1
4	30.0504-961	0	PAS PILOVY / SAW BAND / SÄGEBAND	2910x25(7)x0.9	1
5	30.ER254-002	0	PLECH / SHEET METAL / BLECH	P 1,5x12	1
6	30.ER254-004	0	KRYT RAMENE / ARM COVER / RAHMENABDECKUNG	P 1,5x61	1
7	30.ER254-007	0	KRYT NAPINANI / COVER FOR TENSIONING DEV. / BANDSPANNUNGSABDECKUNG	P 6x80	1
8	30.ER254-009	0	TYC / POLE / STANGE	d 30	1
9	30.ER254-013 (7)	0	KRYT PASU / BELT COVER / BANDABDECKUNG	P 1x56	1
10	30.ER254-014 (8)	0	KRYT PASU / BELT COVER / BANDABDECKUNG	P 1x47	1
11	30.ER254-101	0	RAMENO / BEAM / RAHMEN		1
12	30.ER254-401 (6)	0	DRZAK / HOLDER / HALTER	P 3x100	1
13	30.ER265-601	0	KOLO HNACI / DRIVE WHEEL / ANTRIEBSRAD		1
14	90.001.25.044	0	SROUB IMBUS / HEXAGON SOCKET SCREW / IMBUSSCHRAUBE	M10X14	1
15	90.012.50.007	0	SROUB VALCOVY / CYLINDER HEAD BOLT / ZYLINDERKOPFSCHRAUBE	SROUB M4X30	2
16	90.013.27.007	0	SROUB PULKULATY / BUTTON HEAD SCREW / RUNDKOPFSCHRAUBE	M6X10	4
17	90.013.27.008	0	SROUB PULKULATY / BUTTON HEAD SCREW / RUNDKOPFSCHRAUBE	M6X16	6
18	90.013.27.011 (9)	0	SROUB PULKULATY / BUTTON HEAD SCREW / RUNDKOPFSCHRAUBE	M8X12	1
19	90.013.27.017	0	SROUB PULKULATY / BUTTON HEAD SCREW / RUNDKOPFSCHRAUBE	M4x6	2
20	90.151.50.001	0	PODLOZKA VELKOPL. / LARGE WASHER / GROßFLÄCHENSCHEIBE	PODLOZKA 10	1
21	90.152.50.005	0	PODLOZKA VEJIROVA / FAN WASHER / FÄCHERSCHEIBE	PODLOZKA 4,3	2
22	91.070.011	0	* / null / null	M16x1.5	1
23	91.173.007	0	SPINAC KONCOVY / END SWITCH / ENDSCHALTER	-RIWK	1
24	95.800.016	0	KROUZEK POJIST.VNEJS / EXTERNAL RETAINING RING / SICHERUNGSRING AUßEN	POJISTNY KROUZEK 42	2

1.PRID.DRZAK 30.ER254-106; 164/ZM222 30.5.2019 SCERBA
2.PRID.2xSROUB M6x10 90.013.9Z.114,2x90.152.50.001,2x90.152.50.005,ZRUS.SROUB M4x30 90.013.9Z.104 A NAHR.M4x25 90.013.9Z.103. 164/ZM393 24.9.2019 SZABARI
3.ZM.POLOHY POHONU 201.ER255-100, NATACIT PRI MONTAZI. 236/ZM096 26.02.2020 KOSYK
4.ZRUS.SOUCASTI - CEP 30.ER254-003;KRYT RAMENE 30.ER254-305;DRZAK 30.1814-011;VENTIL 99.260.003;REDUKCE 94.202.002; PODLOZKA 90.150.50.007; 2xSROUB 90.013.27.007;DRZAK 30.ER254-106;SPINAC 91.173.012;2xSROUB 90.013.9Z.114;2xPODLOZKA 90.152.50.005;2xSROUB 90.013.9Z.103; 2xSROUB 90.013.27.012;2xPODLOZKA 90.150.50.004 A DANO DO PILY 201.ER250-100; DO KUSOVNIKU STROJE 251.635. 171/ZM311 23.9.2020 SLEZACKOVA
5.ZRUSEN KRYT PASU 30.0704-038 A NAHR.30.ER254-012. 105/ZM140 13.5.2021 SLEZACKOVA
6.ZRUSEN DRZAK 30.ER254-008 A NAHR. 30.ER254-401 227/ZM314 6.9.2021 ZINDULKA
7.ZRUS. KRYT PASU 30.ER254-012 A NAHR. KRYTEM 30.ER254-013. 259/363 5.10.2021 KOVAR
8.ZRUS.KRYT 30.0704-043 A NAHR.30.ER254-014,ZRUS.SROUB SROUB M8x12(90.013.27.011),PRID.2xSROB M4x6(90.013.27.017).002/ZM002 6.1.2022 SLEZACKOVA
9.UP.VEDENI PASU-VYMENA KOSTEK(ZRUS.CERNE KOSTKY A NAHR.HLINIKOVYMI),ZRUS.2xSROUB M4x6(90.013.27.017) A NAHR.1xSROUB M8x12(90.013.27.011). 002/ZM055 16.2.2022 SLEZACKOVA

Cislo Sestavy/Number of assembly/Nummer der Baugruppe; Verze (Ver.)/Version/Version; Nazev sestavy/Assembly title/Name der Baugruppe; Pozice (Poz.)/Position/Position; Objednaci cislo/Purchase order number/Bestellnummer; Nazev polozky/Volume title/Name der Position; Rozmer/Stock size/Abmessung

9.3. Vedení pásu / Belt guide / Sägebandführung

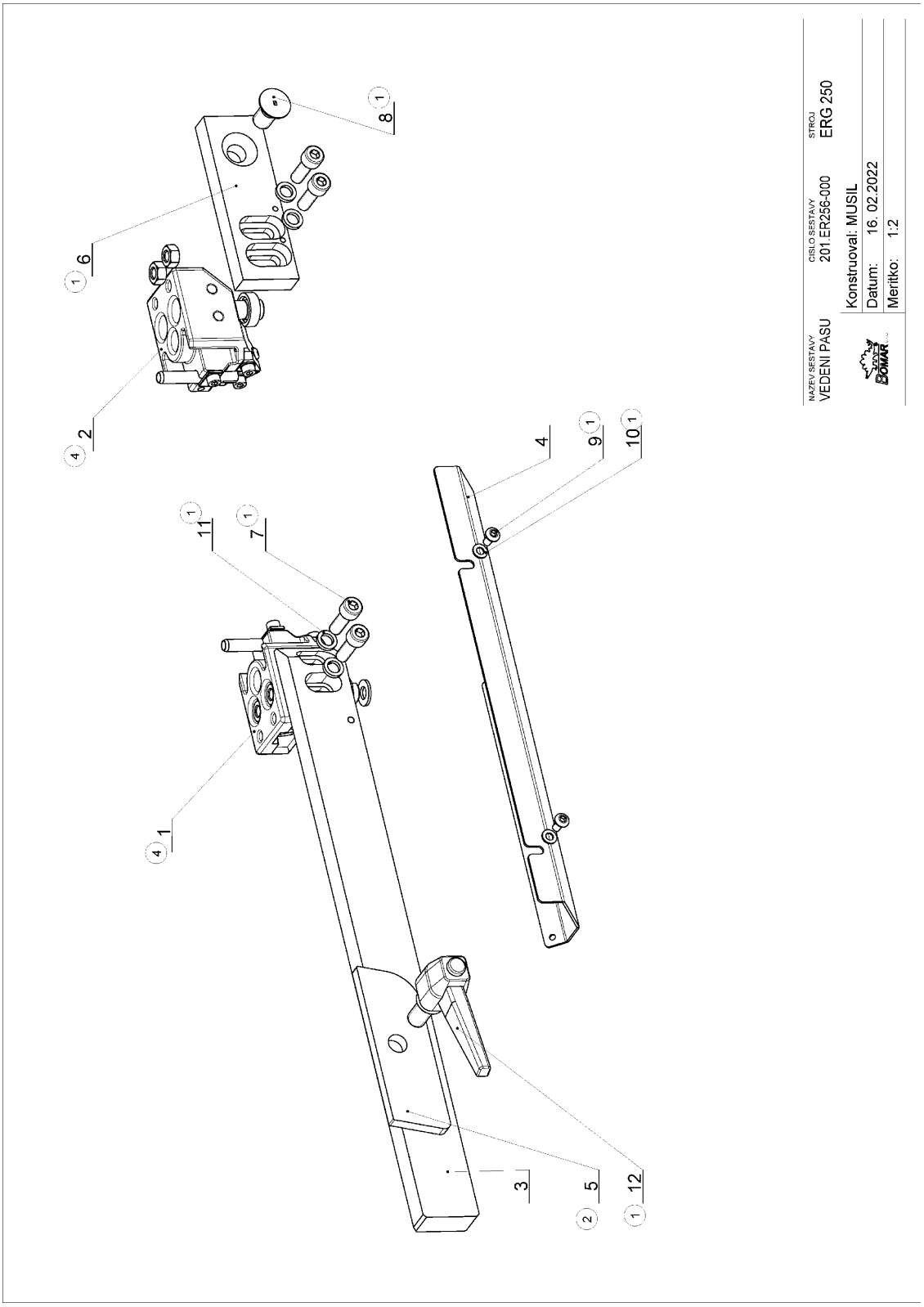

Cislo Sestavy	Ver.	Nazev sestavy
201.ER256-000	0	VEDENI PASU/SAW BAND GUIDE/SÄGEBANDFÜHRUNG

Poz.	Objednaci cislo	Ver.	Nazev polozky	Rozmer	Ks
1	201.0510-500 (4)	0	KOSTKA VODICI / GUIDING CUBE / FÜHRUNGSKLOTZ	SESTAVA	1
2	201.0510-600 (4)	0	KOSTKA VODICI / GUIDING CUBE / FÜHRUNGSKLOTZ	SESTAVA	1
3	30.0104-015	0	LISTA / SLAT / LEISTE	HR 40x20	1
4	30.ER256-005	0	KRYT PASU / BELT COVER / BANDABDECKUNG	P 1,5x94	1
5	30.ER256-101 (2)	0	UPINKA / FASTENER / VERSCHLUSS	P 8x40	1
6	30.FL256-002 (1)	0	LISTA / SLAT / LEISTE	HR 40x15	1
7	90.001.25.033 (1)	0	SROUB IMBUS / HEXAGON SOCKET SCREW / IMBUSSCHRAUBE	8x25	4
8	90.011.27.025 (1)	0	SROUB ZAPUSTNY / COUNTERSUNK SCREW / SENKSCHRAUBE	SROUB M12X25	1
9	90.013.27.003 (1)	0	SROUB PULKULATY / BUTTON HEAD SCREW / RUNDKOPFSCHRAUBE	M5X10	2
10	90.150.50.003 (1)	0	PODLOZKA / WASHER / UNTERLEGSCHEIBE	PODLOZKA 5,3	2
11	90.163.00.002 (1)	0	PODLOZKA / WASHER / UNTERLEGSCHEIBE	NORD-LOCK	4
12	94.008.008 (1)	0	PAKA MONTAZNI / ASSEMBLY LEVER / MONTAGEHEBEL	M12x25	1

1.ZRUS.LISTA 30.ER236-002 A NAHR.30.FL256-002,UPINKA 30.ER256-003 A NAHR.30.ER256-001,ZRUS.PAKA UTAHOVACI M10x25 (94.008.005) A NAHR.PAKA UTAHOVACI M12x25(94.008.008),PRID,2xPODLOZKA 5,3(90.150.50.003),2xSROUB M5x10(90.013.27.003), 4xPODLOZKA NORD-LOCK(90.163.00.002),4xSROUB M8x25(90.001.25.033),1xSROUB M12x25(90.011.27.025). 021/ZM147 11.4.2017 SLEZACKOVA
2.ZRUS.UPINKA 30.ER256-001 A NAHR.30.ER256-101; 148/ZM257 18.7.2018 SCERBA
3.ZRUS.KOSTKA 201.0510-600 A NAHR.201.0110-200,ZRUS.KOSTKA 201.0510-500 A NAHR.201.0110-100. 002/ZM002 2022 SLEZACKOVA
4.ZRUS.KOSTKA 201.0110-200 A NAHR.201.0510-600;ZRUS.KOSTKA 201.0110-100 A NAHR.201.0510-500.002/ZM055 16.2.2022 SLEZACKOVA

Cislo Sestavy/Number of assembly/Nummer der Baugruppe; Verze (Ver.)/Version/Version; Nazev sestavy/Assembly title/Name der Baugruppe; Pozice (Poz.)/Position/Position;
Objednaci cislo/Purchase order number/Bestellnummer; Nazev polozky/Volume title/Name der Position; Rozmer/Stock size/Abmessung

9.5. Kostka vodící / Lead cube / Führungsklotz

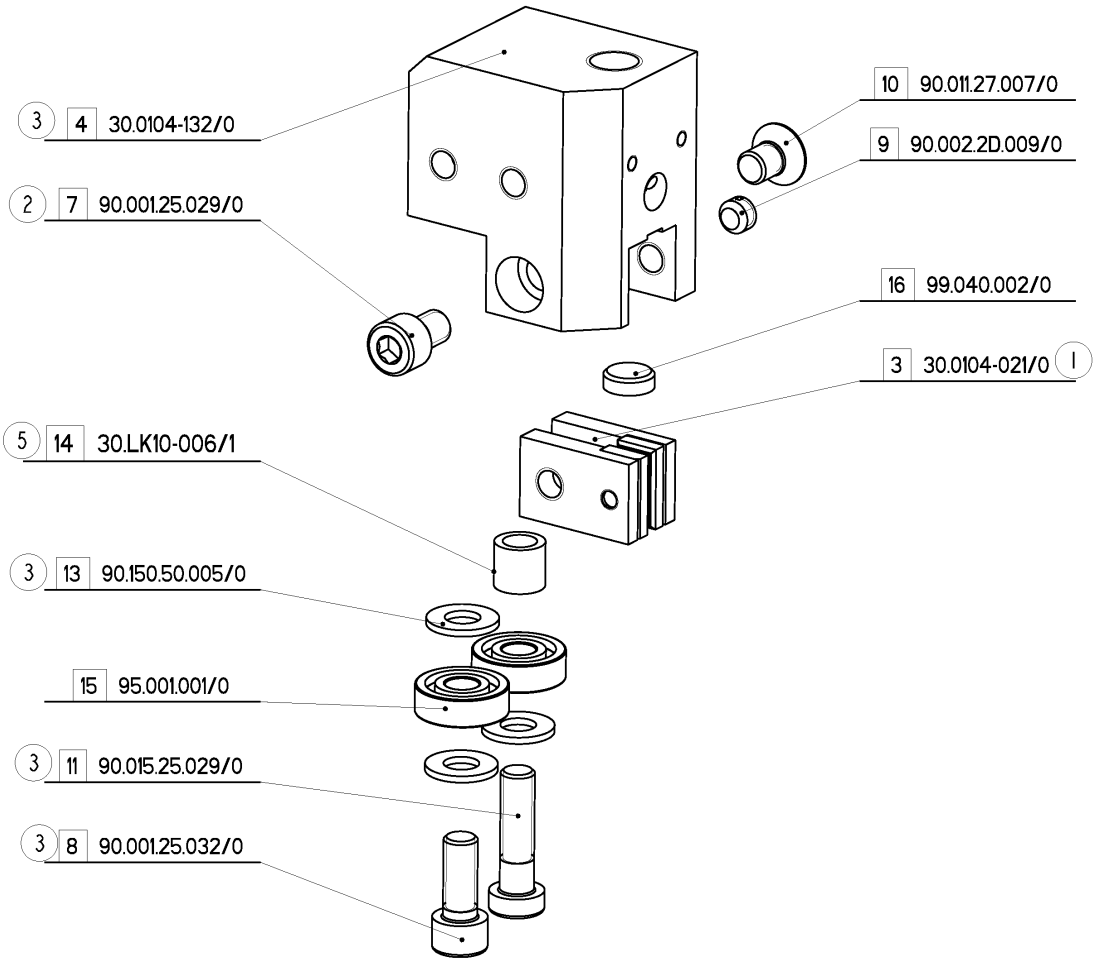

NÁZEV SESTAVY Kat: STG-240- KOSTKA VODICI	ČÍSLO SESTAVY 201.0110-100 List/Listů: 1/0	Revize 5 5.2
BOMAR	Konstruoval:	
	Datum:	24.08.2022
	Měřítko:	4:5

9.6. Kusovník / Piece list / Stückliste - Kostka vodící / Lead cube / Führungsklotz

NAZEV SESTAVY	CISLO SESTAVY	REVIZE
KOSTKA VODICI	201.0110-100	5

rpt.index

Poz.	Objednací číslo	Verze	Název CZ	Name EN	Name DE	Polotovar	Ks.
3	30.0104-021	0	DRZAK	HOLDER	HALTER		2
4	30.0104-132	0	KOSTKA VODICI	GUIDING CUBE	FÜHRUNGSKLOTZ	HR60x40 - 54	1
7	90.001.25.029	0	SROUB IMBUS	HEXAGON SOCKET SCREW	IMBUSSCHRAUBE	8x12 DIN 912 8,8 černěný	1
8	90.001.25.032	0	SROUB IMBUS	HEXAGON SOCKET SCREW	IMBUSSCHRAUBE	8x20 DIN 912 8,8 černěný	1
9	90.002.20.009	0	SROUB STAVECI	SET SCREW	STELLSCHRAUBE	8x6 DIN 913 45H černěn	1
10	90.011.27.007	0	SROUB ZAPUSTNY	COUNTERSUNK SCREW	SENKSCHRAUBE	8x12 DIN 7991 10,9 černěný	1
11	90.015.25.029	0	SROUB IMBUS	HEXAGON SOCKET SCREW	IMBUSSCHRAUBE	8x30 DIN 7984 8.8 černěný	1
13	90.150.50.005	0	PODLOZKA	WASHER	UNTERLEGSCHEIBE	8,4 M8 DIN 125 Zn	3
14	30.LK10-006	1	TRUBKA	TUBE	ROHR	TR12x2 - 13	1
15	95.001.001	0	LOZISKO	BEARING	LAGER	608 T3 CMB 2RS	2
16	99.040.002	0	TVRDOKOV	HARD METAL	HM-SEGMENT	12x4 43011201	1

1.ZRUS.KOSTKA 30.0104-017 A NAHR.30.0104-032,ZRUS.DRZAK 30.0104-020 A NAHR. 30.0104-021. 297/272 12.8.2008 KRPEC

2.ZRUS 90.005.55.005 A NAHR.90.001.25.011; ZRUS 90.005.55.003 A NAHR.90.001.25.009;ZRUS 90.001.25.030 A NAHR.90.001.25.029; 260/ZM432 29.11.2018 SCERBA

3.ZRUS. EXCENTR 30.0104-018, 30.0104-019, ZRUS. SROUB 90.001.25.009 (M5x16) A NAHR. 90.001.25.032 (M8x20), ZRUS. SROUB 90.001.25.011 (M5x25) A NAHR. 90.015.25.029 (M8x30), ZRUS. PODLOZKA 90.150.50.003 (5.3) A NAHR. 90.150.50.005 (8.4), PRID. TRUBKA 30.LK10-006, ZRUS. KOSTKA VODICI 30.0104-032 A NAHR. 30.0104-132 112/ZM114 31.03.2022 ZINDULKA

4.ZRUS SOUC 30.LK10-006 A NAHRAZ 91_200_030. 222/ZM298 17.10.2022 KVASNICKA

5.ZRUS.SOUC.91.020.030 A NAHR.30.LK10-006. 091/ZM127 18.5.2023 MACEL

Číslo Sestavy/Number of assembly/Nummer der Baugruppe; Ver.-Verze/Version/Version; Název sestavy/Assembly name/Name der Baugruppe;; Poz.-Pozice/Position/Position; Objednací číslo/Order number/Bestellnummer; Polotovar/Semiproduct/Halbfabrikat; Vstupní materiál(Vstupní mat.)/Default material/Eingangsmaterial;

9.7. Kostka vodící / Lead cube / Führungsklotz

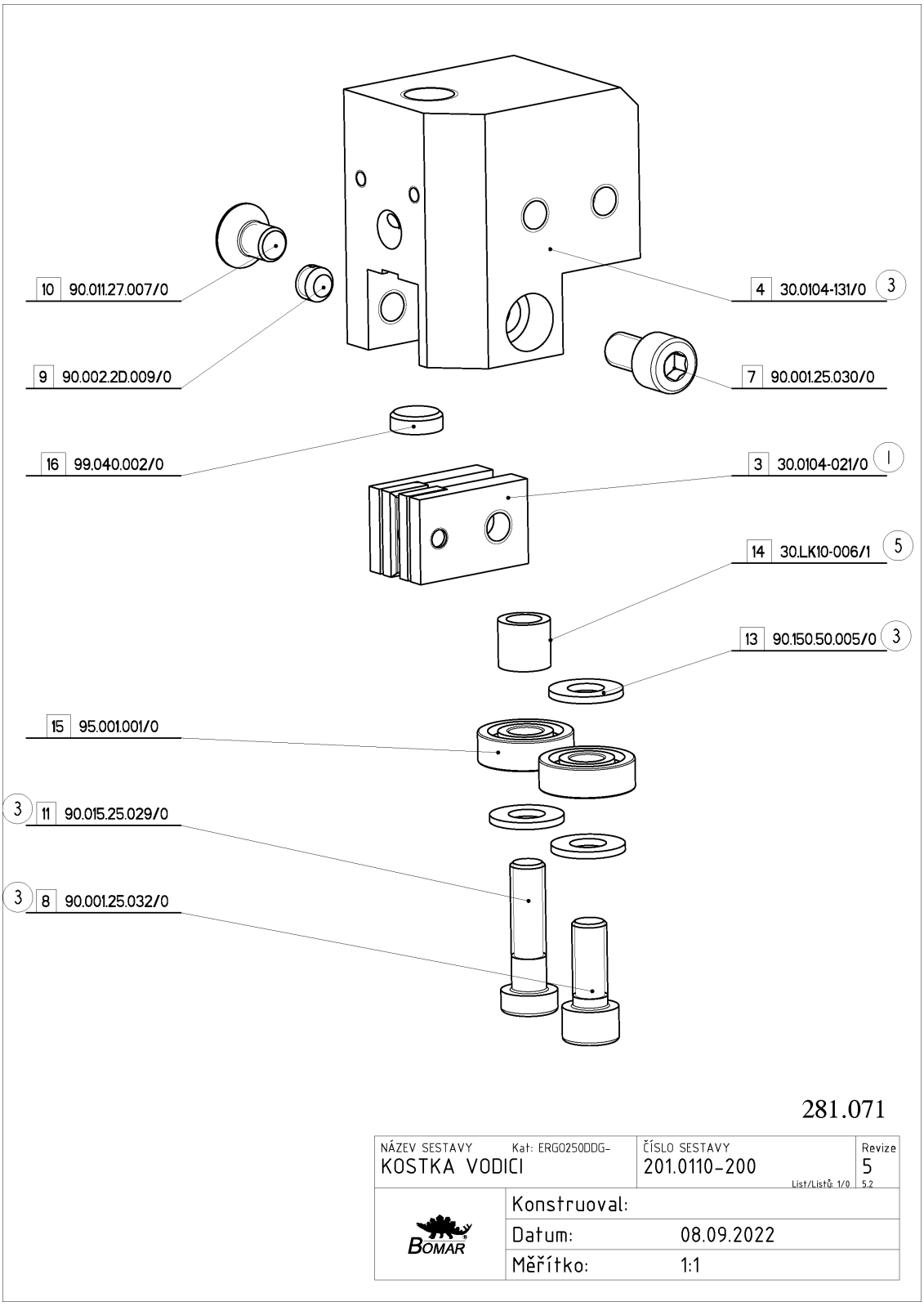

9.8. Kusovník / Piece list / Stückliste - Kostka vodící / Lead cube / Führungsklotz

NAZEV SESTAVY	CISLO SESTAVY	REVIZE
KOSTKA VODICI	201.0110-200	5

rpt.index

Poz.	Objednací číslo	Verze	Název CZ	Name EN	Name DE	Polotovar	Ks.
3	30.0104-021	0	DRZAK	HOLDER	HALTER		2
4	30.0104-131	0	KOSTKA VODICI	GUIDING CUBE	FÜHRUNGSKLOTZ	HR60x40 - 54	1
7	90.001.25.030	0	SROUB IMBUS	HEXAGON SOCKET SCREW	IMBUSSCHRAUBE	8x14 DIN 912 8,8 černěný	1
8	90.001.25.032	0	SROUB IMBUS	HEXAGON SOCKET SCREW	IMBUSSCHRAUBE	8x20 DIN 912 8,8 černěný	1
9	90.002.20.009	0	SROUB STAVECI	SET SCREW	STELLSCHRAUBE	8x6 DIN 913 45H černěn	1
10	90.011.27.007	0	SROUB ZAPUSTNY	COUNTERSUNK SCREW	SENKSCHRAUBE	8x12 DIN 7991 10,9 černěný	1
11	90.015.25.029	0	SROUB IMBUS	HEXAGON SOCKET SCREW	IMBUSSCHRAUBE	8x30 DIN 7984 8.8 černěný	1
13	90.150.50.005	0	PODLOZKA	WASHER	UNTERLEGSCHEIBE	8,4 M8 DIN 125 Zn	3
14	30.LK10-006	1	TRUBKA	TUBE	ROHR	TR12x2 - 13	1
15	95.001.001	0	LOZISKO	BEARING	LAGER	608 T3 CMB 2RS	2
16	99.040.002	0	TVRDOKOV	HARD METAL	HM-SEGMENT	12x4 43011201	1

1 ZRUS.SOUCAST 30.0104-020 NAHRAZENA SOUC.30.0104-021,ZRUS.SOUCAST 30.0104-016 NAHRAZENA SOUC.30.0104-031.
297/ZM272 12.8.2008 KRPEC
2.ZRUS.6HR SROUB M5x25 (90.005.55.005) A NAHR.IMBUS SROUBEM M5x25 (90.001.25.011),ZRUS.6HR SROUB M5x16(90.005.55.003)
A NAHR.IMBUS SROUBEM M5x16(90.001.25.009). 191/ZM281 29.7.2020 SLEZACKOVA
3.ZRUS. EXCENTR 30.0104-018, 30.0104-019, ZRUS. SROUB 90.001.25.009 (M5x16) A NAHR. 90.001.25.032 (M8x20),
ZRUS. SROUB 90.001.25.011 (M5x25) A NAHR. 90.015.25.029 (M8x30), ZRUS. PODLOZKA 90.150.50.003 (5.3)
A NAHR. 90.150.50.005 (8.4), PRID. TRUBKA 30.LK10-006, ZRUS. KOSTKA VODICI 30.0104-031 A NAHR. 30.0104-131
112/ZM114 31.03.2022 ZINDULKA
4.ZRUS SOUC 30.LK10-006 NAHRAZ 91_200_030. 222/ZM298 18.10.2022
5.ZRUS.SOUC.91.020.030 A NAHR.30.LK10-006. 091/ZM127 18.5.2023 MACEL

Číslo Sestavy/Number of assembly/Nummer der Baugruppe; Ver.-Verze/Version/Version; Název sestavy/Assembly name/Name der Baugruppe;; Poz.-Pozice/Position/Position; Objednací číslo/Order number/Bestellnummer;
Polotovar/Semiproduct/Halbfabrikat; Vstupní materiál(Vstupní mat.)/Default material/Eingangsmaterial;