Series **ProfiCut**

ProfiCut 275.230 DG

Operating instructios

Before transporting and using the machine,
please read the instructions thoroughly!

Seriové číslo / Serien Nummer / Serial Number _____

Service and information

Your BOMAR dealer:

Direct BOMAR contact:		
BOMAR spol. s r.o. Těžební 1236/1 62700 Brno Czech Republic, EU	telefon: fax: e-mail: www:	+420 – 533 426 100 +420 – 533 426 109 info@bomar.cz http://www.bomar.cz
We are available:		
Mondays to Fridays	7^{00} – 16^{00}	
Version:		
1.14 / Feb. 2022 rev. 1		

© BOMAR, spol. s r.o. – Subject to modifications and amendments.

EC/ EU Declaration of Conformity

[1) 2)] We:

BOMAR, spol. s r.o.
Těžební 1236/1
627 00 Brno, Czech Republic
Id. No: 48908827

declare herewith

that the following designated device based on its conception and construction as well as the design launched by us meets relevant basic safety requirements of the decrees of the government.

This statement applies exclusively to the machine device in conditions in which it was brought to the market. It does not ap parts subsequently added by the end user or to modifications performed subsequently by the end user.

In the event of any device modification not approved by us this declaration shall lose its validity

Name:	Band Saw
Type :	ProfiCut 275.230 DG
Serial number:	011 – 100 000
Manufacturer	BOMAR, spol. s r.o., Těžební 1236/1, 627 00 Brno

Product data

Determination:	for cross dividing and cutting of rolled and towed bars and profiles made of steel, stainless steel, no ferrous metals and plastics
Description:	Stand, table, cutting unit with the saw band and drive, clamping device, cooling system, el. switch board with control panel.

Pneumatic *NO* ☒ *YES* ☐ Hydraulic *NO* ☒ *YES* ☐ Control system *NO* ☐ *YES* ☒

Technical data:	Cutting rate	40/80 m.min-1
	Cutting angle	-45° to 60°
	Total dimensions in mm (l×w×h)	1150x1520x1670
	Weight	330 kg

Documentation:

Technical documentation for this machine device was elaborated in compliance with Government regulation no. 176/2008, Annex 7, part A.

The device meets relevant requirements of the given directives: 2006/42/EC
2014/30/EU

The applied harmonized standards, National standards and technical specifications:

ČSN EN ISO 12100:2011	ČSN EN ISO 16093:2018	ČSN EN ISO 13857:2021
ČSN EN ISO 4413:2011		ČSN EN 60204 -1 ed.3:2019
ČSN EN 55011 ed.4+A1:2017	ČSN EN 61000-6-2 ed.3:2006	ČSN EN 61000-6-4 ed.2+A1:20

The product is safe on condition of the common and determined usage.

The conformity judging was performed according to §12, art..3a), of the Law no. 22/1997 Coll. as amended.

Brno, 27.05.2021

Point of issue, datum

BOMAR, spol. s r.o.
Těžební 1236/1, 627 00 Brno
Czech Republic
IČO: 48908827
DIČ: CZ48908827

Alfred Pichlmann, Managing Dire

Name and function of the respons subject, signature

1) Name, address and identification number of the subject issuing the conformity declaration (producer of importer)
2) Person authorized to complete the technical documentation
3) The authorized or accredited body co-operating on the conformity judging

!	If the equipment is installed without safety equipment offered by BOMAR, spol. s ro or its agents and used by the custor buyer) then EC declaration loses validity. EC Declaration of conformity is valid only if customer (buyer) installed the BOMAR safety equipment with the machine o some other with equivalent safety device in accordance with current applicable regulations and standards. All machine elements and components that were built into the device by BOMAR, spol. s ro have been declared "identic safety device, as offered by BOMAR, spol. s ro or its agents.

Obsah

1. BEZPEČNOSTNÍ POKYNY / SICHERHEITSHINWEISE / SAFETY NOTES 11

1.1. Machine determination 13
1.2. Protective suit and personal safety 13
1.3. Safety notes for machine operator 14
1.4. Safety notes for the servicing and repairs 16
1.5. Safety notes for the cooling 16
1.6. Instructions for first aid 16
1.7. Safety machine accessories 17
1.7.1. Emergency Stop Switch 17
1.7.2. Arm cover 18
1.7.3. Saw band covers 18
1.7.4. Saw band stretching and rupture inspection 19
1.8. Umístění bezpečnostních značek / Verteilung der Sicherheitszeichen / Position of safety symbols 20
1.9. Umístění štítku stroje / Maschinenschild position / Position of machine label 22

2. DOKUMENTACE STROJE / DOKUMENTATION DER MASCHINEN / MACHINE DOCUMENTATION 23

2.1. Technická data / Technische Daten / Technical data 25
2.2. Rozměrové schéma / Aufstellzeichnung / Installation diagram 26
2.3. Popis / Beschreibung / Description 28
2.4. Transportation and stocking 29
2.4.1. Conditions for transportation and stocking 29
2.4.2. Transport and stocking preparations 29
2.4.3. Transport and stocking 29
2.4.4. Transportní schéma / Transportschema / Transport diagram 30
2.5. Activation 31
2.5.1. Machine working conditions 31
2.6. Band saw unpacking and assembling 31
2.6.1. Length stop assembly 31
2.6.2. Attachment of the cooling liquid tub 33
2.6.3. Hand wheel assembly 35
2.7. Kotevní plan / Verankerungsplan / Grounding plan 36
2.8. Machine installing and levelling 37
2.9. Electrical connection 37
2.9.1. Check the direction of the saw band 38
2.10. Filling of the cooling system 38
2.11. Check machine function 38
2.12. Machine disposal after lifetime 39
2.13. Saw band 40
2.13.1. Saw band size 40
2.13.2. Selection of the saw band tooth system 40
2.13.3. Saw band running-in 40
2.13.4. Tables for teeth selection 41

3. OVLÁDÁNÍ STROJE / BEDIENUNG DER MASCHINE / MACHINE CONTROL 42

3.1. Control elements 44
3.2. Machine controling 45
3.2.1. Start of the machine 45
3.2.2. Cutting 45
3.2.3. Setting of the material length 46
3.2.4. Angular cut setting 47
3.2.5. Setting of the optimal span of the guiding cube 48
3.2.6. Cutting speed setting 50
3.2.7. Setting the speed of the arm sinking to the cut 50
3.2.8. Cooling 50

3.3. Material insertion 51
3.3.1. Handling agent selection 51
3.3.2. Insertion 51
3.3.3. Bundle material cutting 51

4. ÚDRŽBA STROJE / WARTUNG / MACHINE SERVICE 54

4.1. Saw band dismantling 56
4.2. Saw band installation 57
4.3. Saw band stretching and inspection 60
4.3.1. Saw band stretching 61
4.3.2. Saw band run inspection 61
4.4. Adjustment 62
4.4.1. Saw band run adjustment 62
4.4.2. Hard metal guides adjustment 62
4.4.3. Guide cubes adjustment 63
4.4.4. Brush adjustment 63
4.4.5. Adjusting the limit switch of the saw band stretching 65
4.4.6. Saw frame lower position stop adjustment 66
4.4.7. Adjustment of the limit switch of saw frame lower stop 67
4.5. Cooling agents and chips disposal 68
4.5.1. Coolant device inspection 68
4.5.2. Chips disposal 69
4.6. Greases and oils 69
4.6.1. Gearbox oils 69
4.6.2. Lubricant greases 71
4.7. Machine cleaning 71
4.8. Worn pieces replacement 72
4.8.1. Replacement of Guides with Hard Metals 72
4.8.2. Replacement of saw band guiding pulleys 73
4.8.3. Round brush replacement 75
4.8.4. Stretching wheel replacement 75
4.8.5. Driving wheel replacement 77

5. ZÁVADY / STÖRUNGEN / TROUBLESHOOTING 79

5.1. Mechanical problems 81
5.2. Electric problems 84

6. SCHÉMATA / SCHEMAS / SCHEMATICS 86

6.1. Elektrické schéma / Elektroschema / Wiring diagrams 88
6.1.1. 3x400V+N+PE, 50Hz 88
6.1.2. 3x230V+PE, 50/60 Hz 98
6.2. Hydraulické schéma / Hydraulikschema / Hydraulic diagram 108

7. VÝKRESY SESTAV PRO OBJEDNÁNÍ NÁHRADNÍCH DÍLŮ / ZEICHNUNGEN FÜR BESTELLUNG DER ERSATZTEILE / DRAWING ASSEMBLIES FOR SPARE PARTS ORDER 110

7.1. ProfiCut 275.230 DG 112
7.2. Kusovník / Piece list / Stückliste - ProfiCut 275.230 DG 113
7.3. ProfiCut 275.230 DG 114
7.4. Kusovník / Piece list / Stückliste - ProfiCut 275.230 DG 115
7.5. Svěrák / Vice / Schraubstock 116
7.6. Kusovník / Piece list / Stückliste - Svěrák / Vice / Schraubstock 117
7.7. Podstavec / Base / Untersatz 118
7.8. Kusovník / Piece list / Stückliste - Podstavec / Base / Untersatz 119
7.9. Chlazení / Cooling / Kühlung 120
7.10. Kusovník / Piece list / Stückliste - Chlazení / Cooling / Kühlung 121
7.11. Vana / Tank / Wanne 122
7.12. Kusovník / Piece list / Stückliste - Vana / Tank / Wanne 123
7.13. Konzola otočná / Turnable consol / Drehkonsole 124
7.14. Kusovník / Piece list / Stückliste - Konzola otočná / Turnable consol / Drehkonsole 125
7.15. Podstavec svěráku / Vice base / Schraubstockuntersatz 126
7.16. Kusovník / Piece list / Stückliste Podstavec svěráku / Vice base / Schraubstockuntersatz 127

7.17. Rozvadeč elektro / Electro distributor / Schaltschrank 129
7.18. Rameno / Shoulder / Sägerahmen 130
7.19. Kusovník / Piece list / Stückliste - Rameno / Shoulder / Sägerahmen 131
7.20. Rameno / Shoulder / Sägerahmen 132
7.21. Kusovník / Piece list / Stückliste - Rameno / Shoulder / Sägerahmen 133
7.22. Pohon / Drive / Antrieb 134
7.23. Kusovník / Piece list / Stückliste - Pohon / Drive / Antrieb 135
7.24. Vedení pásu / Belt guide / Sägebandführung 136
7.25. Kusovník / Piece list / Stückliste - Vedení pásu / Belt guide / Sägebandführung . 137
7.26. Kostka vodíci / Lead cube / Führungsklotz 138
7.27. Kusovník / Piece list / Stückliste - Kostka vodíci / Lead cube / Führungsklotz 139
7.28. Kostka vodíci / Lead cube / Führungsklotz 140
7.29. Kusovník / Piece list / Stückliste - Kostka vodíci / Lead cube / Führungsklotz 141
7.30. Kartáč / Brush / Burste 143
7.31. Napínání / Tensioning / Spannung 144
7.32. Kusovník / Piece list / Stückliste - Napínání / Tensioning / Spannung 145
7.33. Válec / Roller / Zylinder 146
7.34. Kusovník / Piece list / Stückliste Válec / Roller / Zylinder 147
7.35. Doraz / Stop piece / Anschlag 148
7.36. Kusovník / Piece list / Stückliste Doraz / Stop piece / Anschlag 149

8. VOLITELNÉ VYBAVENÍ KOSTKA VODICÍ/ OPTIONALE ZUBEHÖR FÜHRUNGSKLOTZ/ OPTIONAL ACCESSORIES LEAD CUBE **151**

8.1. Rameno / Shoulder / Sägerahmen 152
8.2. Kusovník / Piece list / Stückliste - Rameno / Shoulder / Sägerahmen 153
8.3. Rameno / Shoulder / Sägerahmen 154
8.4. Kusovník / Piece list / Stückliste - Rameno / Shoulder / Sägerahmen 155
8.5. Vedení pásu / Belt guide / Sägebandführung 156
8.6. Kusovník / Piece list / Stückliste - Vedení pásu / Belt guide / Sägebandführung 157
8.7. Kostka vodíci / Lead cube / Führungsklotz 158
8.8. Kusovník / Piece list / Stückliste - Kostka vodíci / Lead cube / Führungsklotz 159
8.9. Kostka vodíci / Lead cube / Führungsklotz 160
8.10. Kusovník / Piece list / Stückliste - Kostka vodíci / Lead cube / Führungsklotz 161

1. Bezpečnostní pokyny / Sicherheitshinweise / Safety notes

The operating instructions must be read by the person, who keeps in touch with the machine before transportation, installation, using, servicing, reparation, stocking or removal!

The operating instructions include relevant information. The operator must familiarise himself with the install and operation, safety notes and machine servicing, because reliability and service life must be reached. The operating instructions must avoid risks, which are linked to work on the machine. Before transporting and using of the machine, please read the instructions thoroughly!

Attention!
The operating instructions must be available at the machine! Keep the operating instructions in good condition!

1.1. Machine determination

The band saw ProfiCut 275.230 DG is determined for cutting and shortening of rolled bars and drawn bars and profiles from steels, stainless steels, non-ferrous metals and plastics with cutting angles from -45° to 60°.

Combustible materials are excepted for cutting! Any other usage and operation outside this range are unauthorized and the manufacturer/supplier does not accept any responsibility for any damages resulting from such misuse. The operator has full responsibility!

The machine is equipped with safety and protective guarding for operator and machine protection. Nevertheless, this safety and protective guarding cannot prevent injury. Service personnel must read this chapter and comprehend it, before he starts to work on the machine. Always keep instructions about work safety! Service personnel must take into account other aspects of the risk, which refer to the ambient conditions and the material.

Attention!
Consider the safety signs on the machine. Do not remove or damage them!

1.2. Protective suit and personal safety

Wear tight fitting overalls! Loose fitting clothes may be caught with machine parts and cause serious injury.

Wear protective gloves! Material cuts and saw band have sharp edges and may cause serious injuries.

Attention!
Gloves you can use only at working material replacement (saw band)! The machine and accessories must be inactive! If the machine is running, you must not wear gloves! It is dangerous, because some parts of the machine can catch gloves!

Wear protective shoes with non-skid soles! The unsuitable shoes may cause balance loss and following injury. Falling work pieces may cause serious injuries too.

Wear protective goggles! Chips and cooling liquid may damage your eyes.

Always wear ear protections! Most of the machines emit up to 80 dB and may damage your hearing.

Do not wear jewellery and always tie back long hair! Moving machine parts can catch jewellery or loose hair and may cause serious injuries.

Operate the machine only when you are fit enough to work. Illnesses or injuries diminish concentration.

Avoid machine work, which may compromise the safety of you and your colleagues!

Attention!
Consider the safety signs on the machine. Do not remove or damage them! Keep these labels still readable!

1.3. Safety notes for machine operator

Keep instructions and orders about work safety!
Read the operating instructions, before you start to work on the machine! Keep the operating instructions in good condition!

Machine can be operated only by one person. Machine operator is responsible for presence of other persons by the machine.

Attention!
Machine can be operated by person older than 18 years!
Machine can be operated only person physically and mentally fit for this activity

Close covers before the machine starting and check, if the covers are not damaged. Damaged covers must be repaired or changed. Do not start the machine, if the cover is removed! Check, if the electric cables are not damaged.

Attention!
Do not connect the machine to electricity if the covers are removed. Do not touch the electrical equipment.

- For machine starting take care, that there is nobody in the working area of the machine (it means in the working area of the vice, the saw band, the saw arm etc.).
- In no circumstances touch the rotating elements.
- Work on the machine only when the machine is in good condition!
- Check at least once in a shift, if the machine is not damaged. If the machine is damaged, you must bring the machine in order and you must inform your superior!
- Keep your working area clean! Ensure sufficient lighting in the working area.
- Take off the spilt water or the oil from the floor and dry it. Do not touch the cooling liquid with bare hands! Do not set the nozzle of the cooling liquid, when the machine is started on
- Do not remove the chips from the working area of the machine, when the machine is started on!

- Do not use the compressed air for the machine cleaning or for the chips removing!
- Use the protective instruments for chips removal!

1.4. Safety notes for the servicing and repairs

Switch off the main switch and lock it, before you start service work! Otherwise, there is possibility of hazardous machine starting.

Only qualified person can do the servicing and repairs. For parts changing, use only parts, which are identical with the originals. Otherwise, there is possibility of health hazard. Use only recommended type of the hydraulic oils and oils and lubricants!

Attention!
Only a qualified professional can carry out the servicing and repairs of the electric equipment! Take special care during the work with electrical equipment. High voltage shock can have fatal consequences! Always keep notes about work safety! Otherwise, there is possibility of heavy injury!

Do not remove or do not lock the limit switches or safety equipments! Any use of the saw, accessories or machine parts other than that intended by the BOMAR, spol. s r.o. company is not permitted. The guarantee on this product will be afterward lost and BOMAR, spol. s r.o. takes no responsibility for caused damages.

Do not start the machine if all covers are not in place.

1.5. Safety notes for the cooling

Attention!
- *When handling cooling agents always wear hazardous fluid-proof gloves!*
- *Wear protective goggles!*
- *Cooling liquid can get in contact with your eyes and may cause permanent severe injuries*

1.6. Instructions for first aid

1. Pull off and safely remove polluted, soaked clothing.
2. For breathing, go out in the fresh air or look for first aid treatment.
3. Wash with water or use crèmes for contact with the skin.
4. Flush with water for eyes and look for first aid treatment.

For swallowing, drink a lot of water and induce vomiting. Look for medical help.

1.7. Safety machine accessories

The machine is equipped with safety accessories. It protects the operator from injuries and the machine before damage. The safety accessories are blocking accessories, emergency switches and covers. Check once in a week the function of the safety accessories. If the safety accessories are functionless, you must stop work and repair or change the safety accessories.

Enhanced risk!
Do not come into or intervene in the cutting area.
Otherwise, there is possibility of heavy injury.

1.7.1. Emergency Stop Switch

Emergency Stop Switch is used for emergency switching – off the machine in case defect or health hazard. By pressing Emergency Stop Switch will immediately stop all dangerous machine movements.

If any damages or fault appears, immediately press Emergency Stop Switch!

It is possible to release the pressed button by twisting of the upper part of the button.

The Total Stop button is situated at the electric distribution box

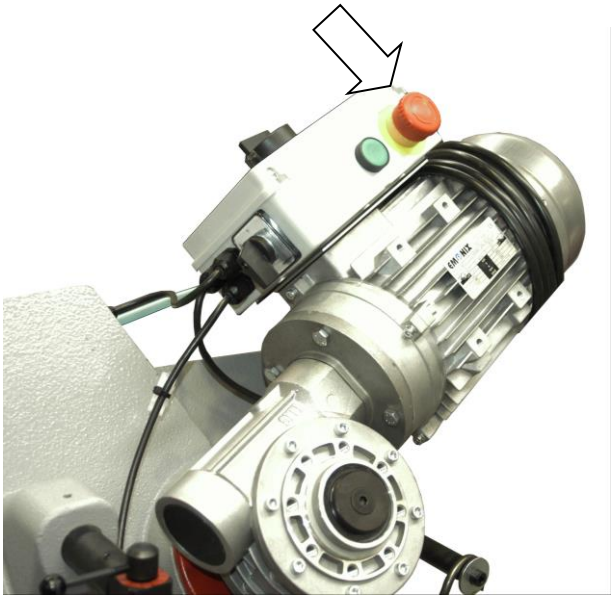

1.7.2. Arm cover

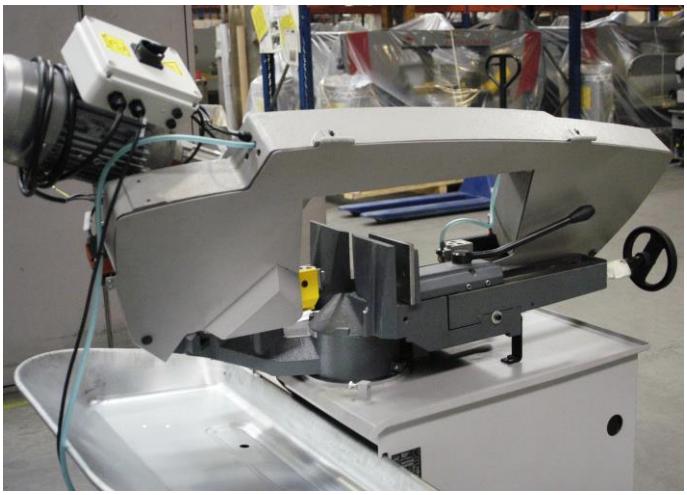

If the cover is opened during operation, the limit switch is opened and the band saw is stopped. The band saw is not possible start in set mode.

The band saw is stated to the operation, when the cover is closed!

1.7.3. Saw band covers

It covers the visible area of the saw band

- from guiding cube to the frame.

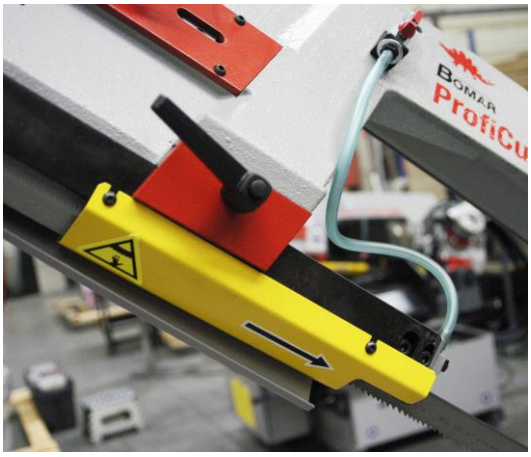

- from the vice jaw to the band saw frame (along the both sides)

Never turn-ON saw band when cover is not mounted!

1.7.4. Saw band stretching and rupture inspection

This device checks the saw band tension and causes immediate machine stop if the band incidentally ruptures.

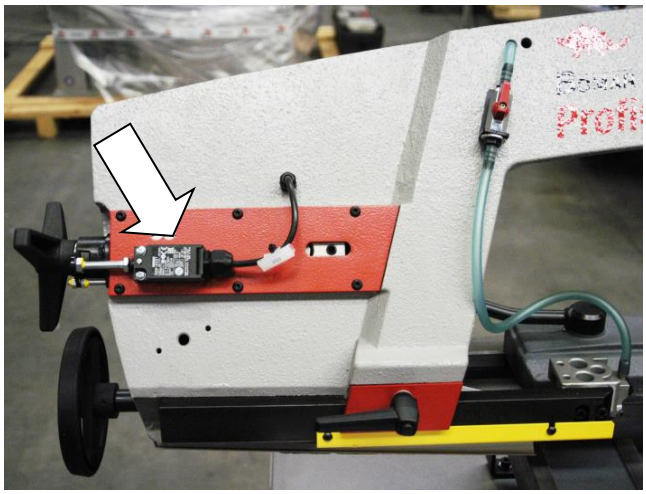

The device includes a limit switch. Its adjustment is described in chapter „Servicing and adjusting". Check the switch carefully and periodically – adjust it if necessary.

1.8. Umístění bezpečnostních značek / Verteilung der Sicherheitszeichen / Position of safety symbols

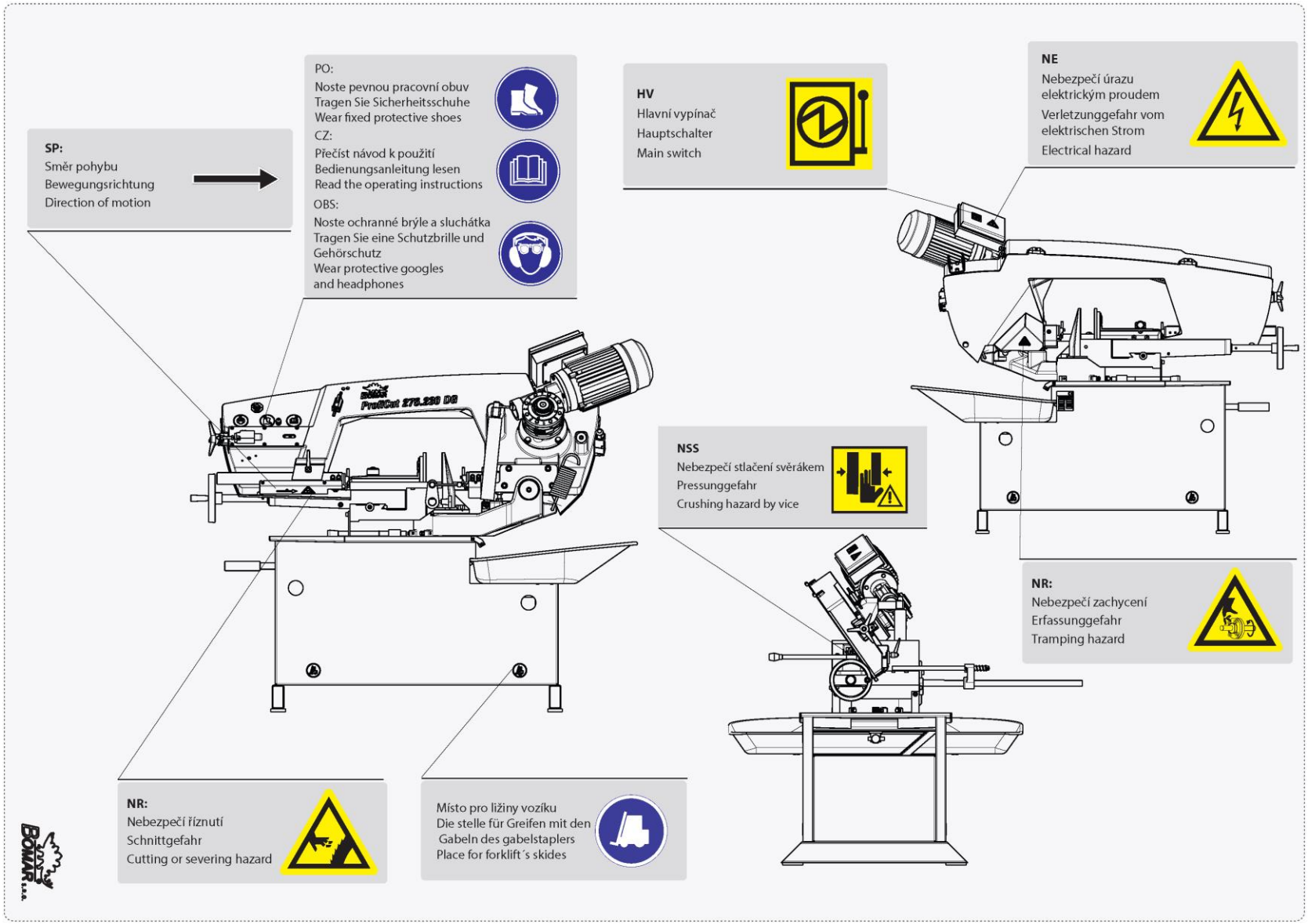
SP:
Směr pohybu
Bewegungsrichtung
Direction of motion
PO:
Noste pevnou pracovní obuv
Tragen Sie Sicherheitsschuhe
Wear fixed protective shoes
CZ:
Přečíst návod k použití
Bedienungsanleitung lesen
Read the operating instructions
OBS:
Noste ochranné brýle a sluchátka
Tragen Sie eine Schutzbrille und Gehörschutz
Wear protective googles and headphones
HV
Hlavní vypínač
Hauptschalter
Main switch
NE
Nebezpečí úrazu elektrickým proudem
Verletzunggefahr vom elektrischen Strom
Electrical hazard
NSS
Nebezpečí stlačení svěrákem
Pressunggefahr
Crushing hazard by vice
NR:
Nebezpečí zachycení
Erfassunggefahr
Tramping hazard
NR:
Nebezpečí říznutí
Schnittgefahr
Cutting or severing hazard
Místo pro ližiny vozíku
Die stelle für Greifen mit den Gabeln des gabelstaplers
Place for forklift´s skides

1.9. Umístění štítku stroje / Maschinenschild position / Position of machine label

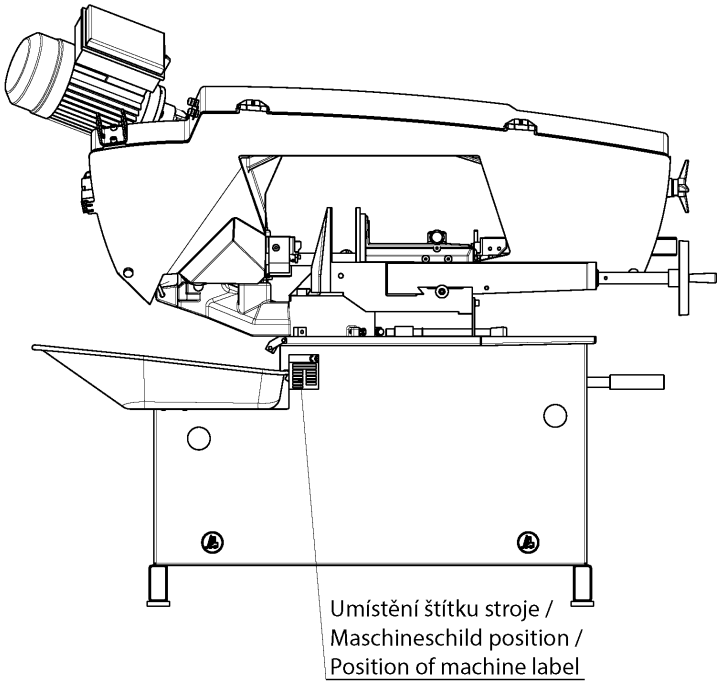

2. Dokumentace stroje / Dokumentation der Maschinen / Machine documentation

2.1. Technická data / Technische Daten / Technical data

Hmotnost stroje / Maschinengewicht / Machine weight:	
• Hmotnost / Gewicht / Weight	330 kg
Rozměry stroje / Maschinengröße / Machine size :	
• Délka / Länge / Lenght	1150 mm
• Šířka / Breite / Width	1520 mm
• Výška / Höhe / Height	1670 mm
Elektrické vybavení / Elektrische Ausrüstung / Electical equipment:	
• Napájení / Versorgungsspannun / Supply voltage	~ 3 x 400/230V, 50/60Hz, TN-C-S
• Příkon / Gesamptschlusswert / Total Input	1,2 kW
• Max. jištění / Max. Vorschaltsicherung / Max. Fuse	10 A
• Krytí / Schutzart / Protection	IP 54
Akustický tlak / Schalldruckpegel / Acoustic pressure:	
• ProfiCut 275.230 DG	L_{Aeqv} = 73, 4 dB
Pohon / Atrieb / Drive:	
• Typ / Type / Type	91.001.381 MSD 90L-8/4-B14 – FT115
• Napájení / Versorgungsspannun / Supply voltage	~ 3×400V, 50H z
• Výkon / Leistung / Output	0,7/1,1 kW
• Jmenovité otáčky / Motornenndrehzahl / Nominal speed	1420 min
Chladící zařízení / Kühlmiteleinrichtung / Cooling equipment:	
• Výkon / Leistung / Output	0,05 kW
• Obsah nádrže / Volumen vom Kühlmittel / Capacity	10 dm3
Rozměr pásu / Sägebanddimension / Band size:	
2720×25 (27)×0,90 mm	
Řezná rychlost / Schnittgeschwindigkeit / Cutting speed:	
40/80 m/min	

Řezné rozsahy / Schnittbereiche / Cutting size:

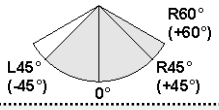

0°	Ø 230 mm	275×180 mm	250×230 mm	230×230 mm
R 45° (+45°)	Ø 190 mm	190×150 mm	170×230 mm	180×180 mm
L 45° (-45°)	Ø 170 mm	185×100 mm	90×230 mm	150×150 mm
R 60° (+60°)	Ø 120 mm	120×100 mm	120×100 mm	100×100 mm

Acoustic pressure level:

The equivalent level of the acoustic pressure A (noise) in the position of the operator is L_{Aeqv} = 73, 4 dB při 35 m.min^{-1}/70 m.min^{-1}. The values are indicating the emission levels and may not present safety working levels. Among the factors, which influence the real values of the operator exposure, are properties of the workshop room, cut material and used saw bands – which may significantly influence the exposure levels.

2.2. Rozměrové schéma / Aufstellzeichnung / Installation diagram

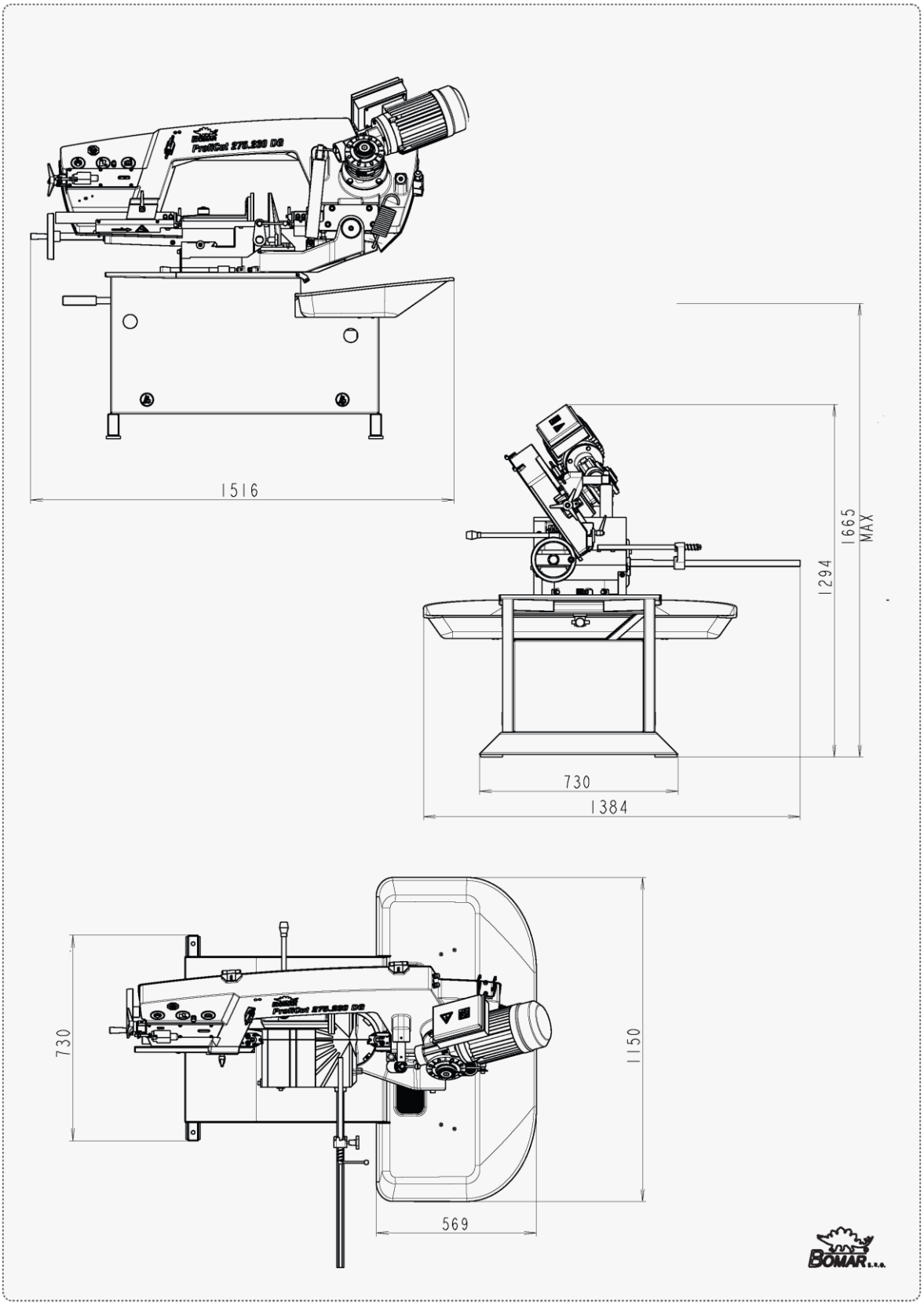
1516
1665
MAX
1294
730
1384
730
1150
569

2.3. Popis / Beschreibung / Description

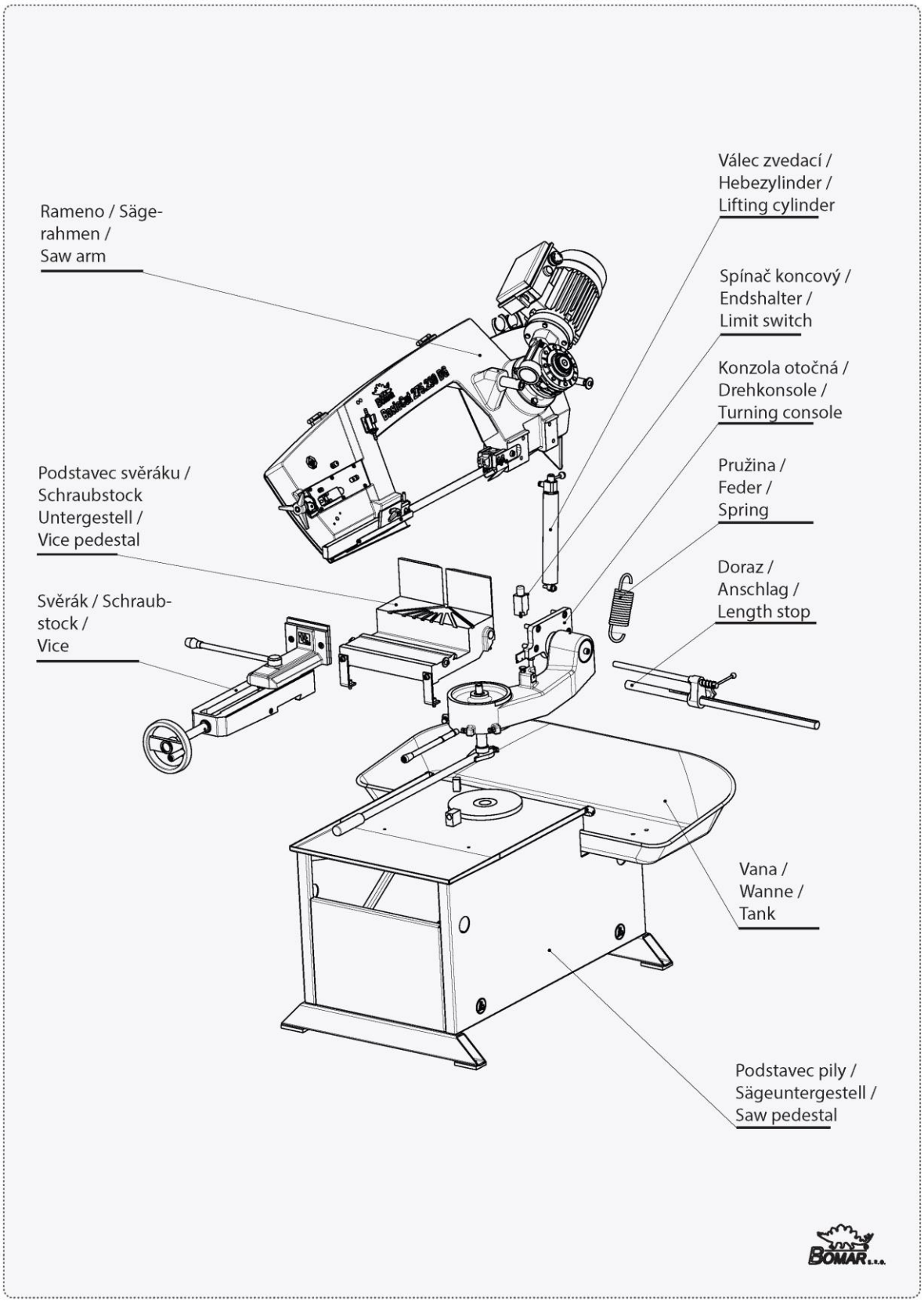

2.4. Transportation and stocking

2.4.1. Conditions for transportation and stocking

Keep recommendations for the manufacturers for transportation and stocking! If the recommendations are not kept, damage can occur to the machine.

- Don't use a forklift truck for handling the machine, if you do not have license for it!
- Don't move under suspended loads! Fault in lifting device may cause serious injury.
- Keep a safe distance from the machine during the transport.
- Temperature of the air from *-25°C to 55°C*, for a *short term* (max. 24 hours) temperature of the air until *70°C*
- Do not expose the machine to radiation (for example microwave radiation, ultraviolet radiation, laser radiation, x-ray radiation). Radiation can cause problems with the machine function and deteriorating condition of the isolation.
- Take measures, to prevent damage by dampness, by vibrations and by shakes.

2.4.2. Transport and stocking preparations

Close the vice and thoroughly oil all blank surfaces.

Lower the saw frame to the lowest position.

Make sure to empty the machine of all traces of the cooling agent.

Fasten all loose parts securely to the machine.

Pack and wrap the control desk securely to avoid damage during transport.

Fix the stickers stating the minimum approximate machine weight to at least five well visible places.

2.4.3. Transport and stocking

The machine must be secured during transportation. Screw on the palette to the floor of the van or the trailer. Be careful that the machine is not damaged during transportation. Store the machine only under conditions mentioned in the manual, to avoid damage of the machine.

It is forbidden to handle the machine any other way, than it is written in this operating instructions, the machine can be damaged.

Place the forks of a fork lift truck according to these marks!

2.4.4. Transportní schéma / Transportschema / Transport diagram

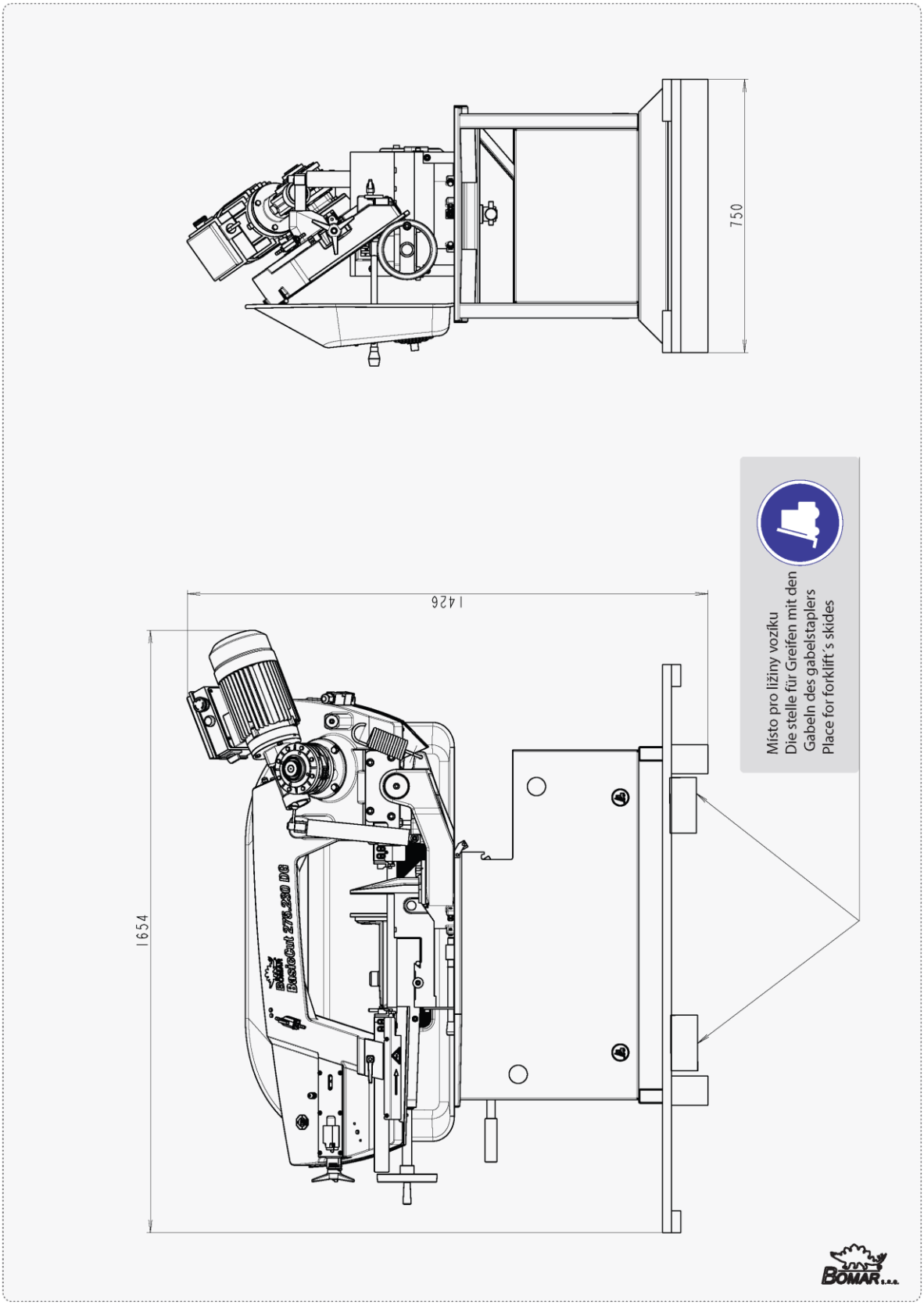

2.5. Activation

2.5.1. Machine working conditions

Keep the conditions of the manufacturer for machine operating! If recommendations are not kept, damage can occur to the machine.

The manufacturer warrants the correct function of the machine for these conditions:

- At temperature air from *10°C to 40°C*, the temperature average during 24 hours must *not exceed over 35°C*.
- At relative dampness of the air in the extend from 30% to 95% (not concentrate)
- Altitude lower than 1000 metres.
- Do not expose the machine to the radiation (for example microwave radiation, ultra-violet radiation, laser radiation, x-ray radiation). Radiation can cause problems with the machine function and deteriorating condition of the isolation.

2.6. Band saw unpacking and assembling

Remove the packing from the machine and unpack all parts.

> ***Attention!***
> *Switch off the main switch and lock it, before you start assembly! Otherwise, there is possibility of hazardous machine starting.*

Install all enclosed parts.

2.6.1. Length stop assembly

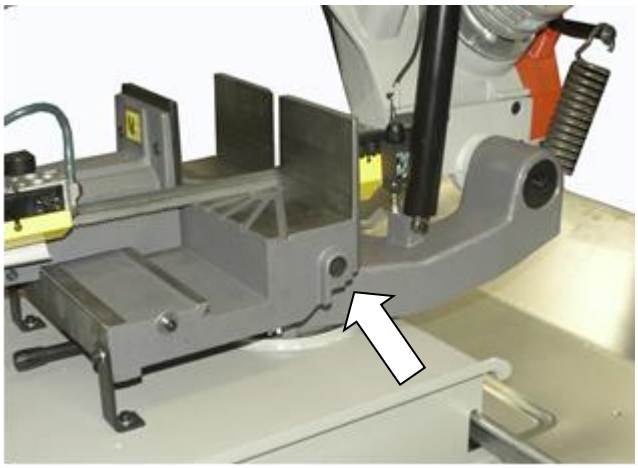

1. Take on the length stop to the hole on vice side.

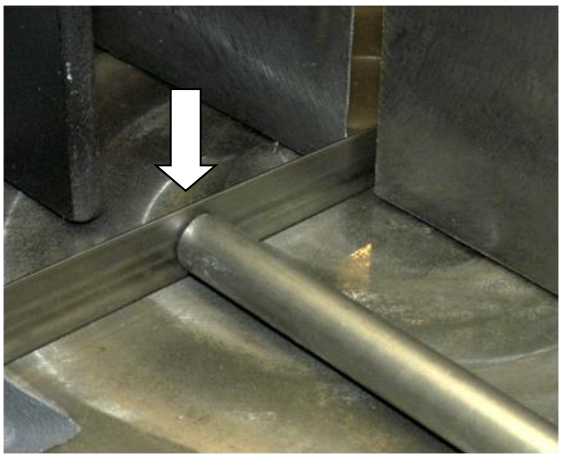

2. Shift the length stop until the saw band.

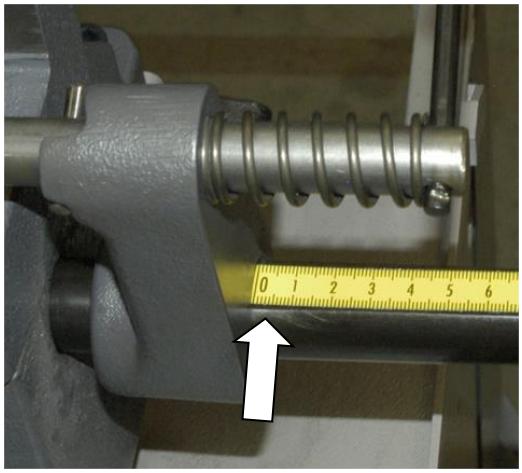

3. Set the scale to the value „0".

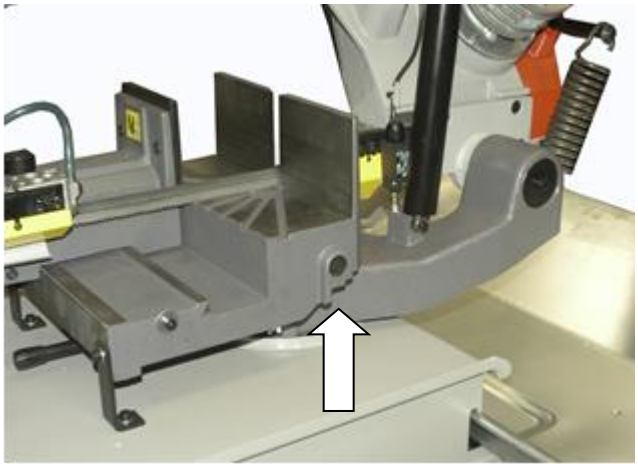

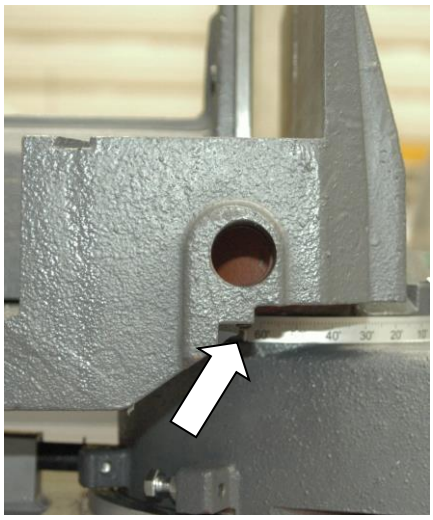

4. Secure it with screw on the bottom side of the vice.

2.6.2. Attachment of the cooling liquid tub

1. Put the tub for the dripping off of the coolant on the pedestal from the back side of the saw

2. Attach the hose for the coolant removal to the outlet of the tub and put its other and immerse its other end into the coolant tank.

2.6.3. Hand wheel assembly

Take down the nut from holder of the hand wheel. Insert it to the hole on backside of the wheel and screw on the holder.

2.7. Kotevní plan / Verankerungsplan / Grounding plan

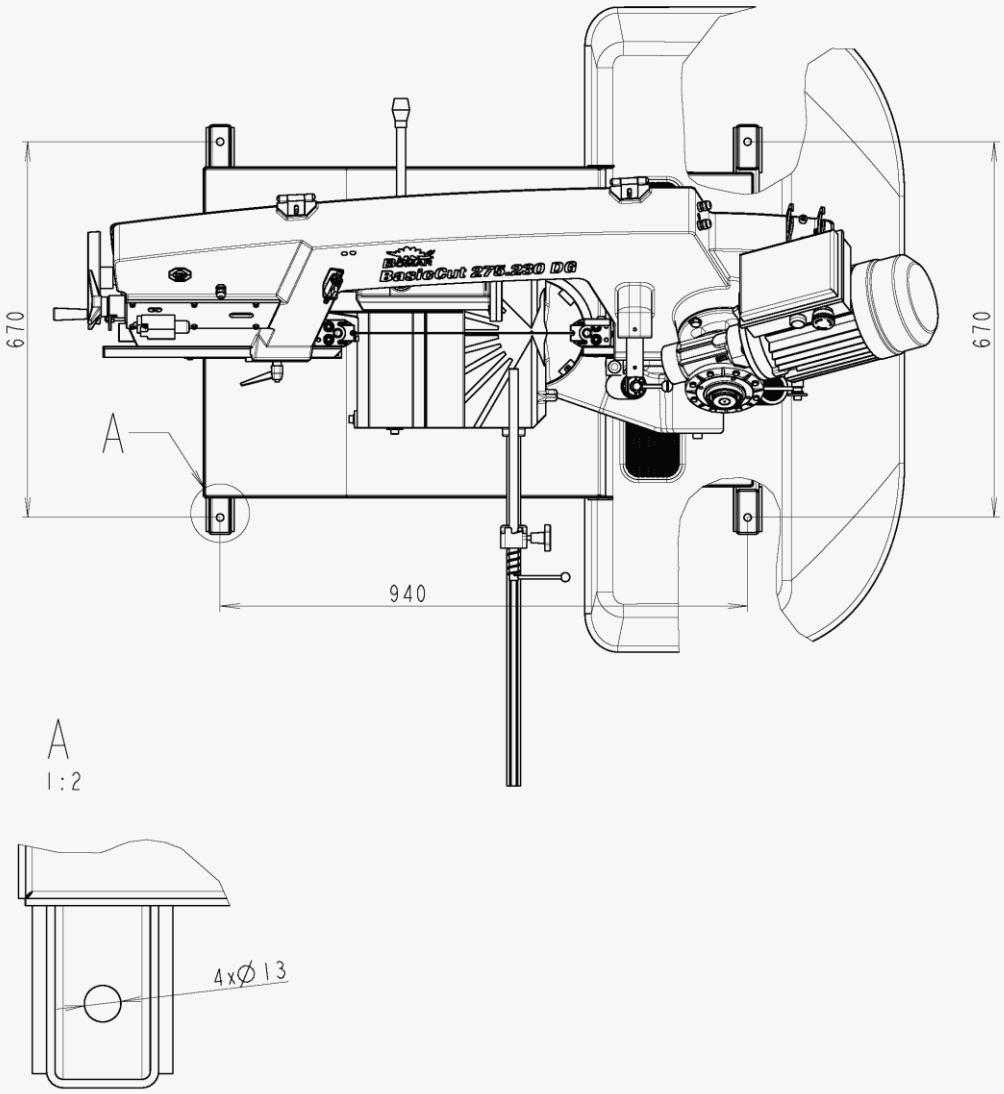

Kotvící materiál / Verankerungsmaterial / Grouding material

- 4× Hmoždina / Dübel / Plug – ø14 mm
- Vrtáno do hloubky / In die Tiefe gebohrt / Drilled to – 100 mm
- Šrouby / Schraube / Screws – M12

Šrouby podložit deskami o min. rozměrech P10×100-100
- Die Schrauben mit Platten mit Minimaldimensionen P10×100-100 unterlegen
Screew must be bottomed with plates (min. dimensions P10×100-100)

Požadavky na rovinnost podlahy / Anforderungen an die Bodenebenheit / Requirements for floor flatness

± 10 mm / 1 m

2.8. Machine installing and levelling

Check the floor supporting capacity before machine installing. If the floor capacity does not agree with requirements, you must prepare the necessary base for the machine.

Minimal requirement:

machine weight – ProfiCut 275.230 DG – 330 kg

+ weight of accessories

+ maximum weight of material

- The machine must be levelled at the horizontal position. All feet of the machine must touch with the floor after levelling
- The machine must be levelled by means of the calibrated spirit level. Spirit level is put on the vice area. Set the roller conveyors according to the spirit level.
- For machine levelling, take care that there is sufficient available space for operation, repair work, servicing of the machine and handling the material..
- The machine including appended parts and accessories must be visible from the place of operation.

2.9. Electrical connection

Attention!
Only a qualified professional must carry out the servicing and repairs of the electric equipment! Take special care during work with electrical equipment. High voltage shock can have fatal consequences! Always keep notes about work safety.

Electrical parameters of the machine:

- Service voltage: ~ 3 x 400/230V, 50/60Hz, TN-C-S
- Total input: 1,2 kW
- Max. fuse: 10 A

Before connecting switch off the main switch of the power supply circuit for the machine and ensure dry place when doing connecting works!

Note:
The values of the crosscut of the conductor and the rated current are in the norms.

Service voltage must agree with the line voltage! Crosscut of the supply line must respond with rated current for max. machine load.

Note:
The socket with the fork can be used only at the machines with the rated current less than 16 A and total input less than 3 kVA.

The input line is equipped with a 16 A socket for connection of the machine to the electric supply line.

In case the machine is connected with a direct connection, an extra main switch must be added which can be locked in zero position.

Attention!
In this case the extra main switch becomes primary and the main switch on the machine has only secondary function.

2.9.1. Check the direction of the saw band

After the machine has been successfully connected, briefly switch on the machine and put the driving engine of the band in the running position. The direction must be in accordance with the arrow direction on the saw band cover. In case the direction of the saw band does not match, two phases at the terminal strip must be switched.

2.10. Filling of the cooling system

Prepare the mixture of the water and the cooling liquid. Keep the concentration specified by manufacturer. Shift away the cover from the drainage hole. Fill the mixture of the water and the cooling liquid to the tank of the cooling system. Area of the tank for the cooling liquid is discovered from the chapter *Technical data*.

Let the drainage hole opened and with the sieve during operation, because it secures the right work of the cooling system. Filling the tank with the cooling liquid, take care that the liquid does not drip out of the tank and the tank does not overflowed.

2.11. Check machine function

Check, if the machine or some parts of the machine were not damaged during transport.

Check, if covers are installed and functional. Check by means of the Tenzomat if the saw band is correctly stretched. If it is necessary, you can stretch the saw band according to chapter *Selection and replacement of the saw band*. Values of the saw band stretching are on the Tenzomat. Switch on the main switch and check the motors and systems (saw band drive, hydraulic pump, cooling pump, chips conveyor).

Open and close the main vice. Turn the saw frame of the band saw from one outer position to other outer position. Raise the saw frame to the top position and drop the saw frame to the lowest position.

Start the machine with the cooling pump and let it run without load until the cooling system will be filled with cooling liquid. As soon as the cooling liquid starts to escape from the nozzles of the cooling system, the cooling system is ready for the operation. Carry one cycle of cutting without material. Check, if the machine runs with no irregularities. If all machine functions are right, the machine is ready for operation.

2.12. Machine disposal after lifetime

Blown out all service fluids (cooling liquid, hydraulic oil) into designated reservoir. Dismantle machine into separate parts and dispose them in accordance with valid directives.

Packaging material Also dispose in accordance with valid directives.

Packaging and machine parts that contain secondary raw materials can be recycled.

2.13. Saw band

Refit the saw band cover only after you have installed and tightened the saw b

2.13.1. Saw band size

2720×25 (27)×0,90 mm

2.13.2. Selection of the saw band tooth system

The manufacturers provide the saw bands with constant and variable tooth system. The important factor for selection of the tooth system is length of the cutting canal with respect to the size of the product

1. *Constant tooth system* – the saw band has parallel tooth pitch all over length. This way is suitable for cutting of solid material.

> *BOMAR for recommended Variable tooth system for band saw.*

2. *Variable tooth system* – tooth pitch is variable. Variable tooth system is used for profiled materials and bundle cutting. Variable tooth pitch lowers vibration of the saw band, increases service life of the saw band and quality of the cutting area.

Z_pZ – teeth number on one inch S – tooth with zero angle of the teeth K – tooth with positive angle of the teeth

Examples of the tooth system marking:

32 S – number „32" means 32 teeth on one inch (that means constant tooth system), letter „S" marks teeth with zero angle of the tooth.

4–6 K – number „4–6" means 4 till 6 teeth on one inch
(that means variable tooth system); letter „K" marks teeth with positive angle of the teeth.

2.13.3. Saw band running-in

Running-in: Cut the material with the frame lowering reduced to 50% only. When vibrations occur increase or decrease the band speed.

When cutting small pieces run the band until approximately 300 cm^2 of material has been cut. When cutting large pieces run the band for 15 minutes approximately. When the band has been run, increase the lowering-speed to normal speed. The running in of the saw band avoids micro-breaks on the cutting edges of new saw band ensuing from first excessive stress. This would decrease service life substantially. The optimal running in of the saw band produces ideal rounded cutting edges and therefore the conditions for an optimal service life.

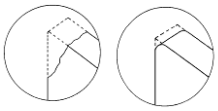

> ***Note:*** *Run regrinding saw bands too.*

2.13.4. Tables for teeth selection

PROFILOVÝ MATERIÁL (D_p, S = mm)

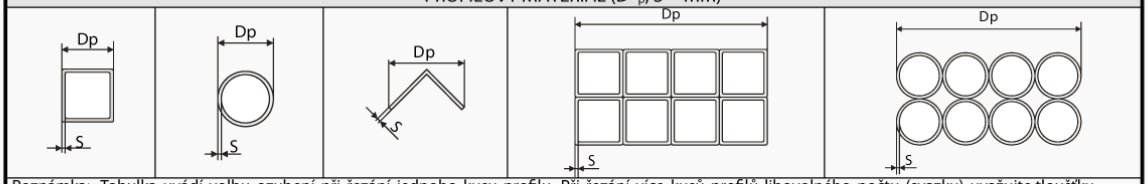

Poznámka: Tabulka uvádí volbu ozubení při řezání jednoho kusu profilu. Při řezání více kusů profilů libovolného počtu (svazku) uvažujte tloušťku stěny jako dvojnásobek tloušťky stěny jednoho profilu (tzn., že tloušťka „S" rovná se 2×S). V tabulce je uvedeno ozubení jak konstantní, tak variabilní.

Tloušťka stěny S [mm]	Ozubení (Z_pZ) Vnější průměr profilu D_p [mm]					
	20	40	60	80	100	120
2	32 S	24 S	18 S	18 S	14 S	14 S
3	24 S	18 S	14 S	14 S	10–14 S	10–14 S
4	24 S	14 S	10–14 S	10–14 S	8–12 S	8–12 S
5	18 S	10–14 S	10–14 S	8–12 S	6–10 S	6–10 S
6	18 S	10–14 S	8–12 S	8–12 S	6–10 S	6–10 S
8	14 S	8–12 S	6–10 S	6–10 S	5–8 S	5–8 S
10	-	6–10 S	6–10 S	5-8 S	5–8 S	5–8 S
12	-	6–10 S	5–8 S	5–8 S	4–6 K	4–6 K
15	-	5–8 S	5–8 S	4–6 K	4–6 K	4–6 K
20	-	-	4–6 K	4–6 K	4–6 K	3–4 K
30	-	-	-	3–4 K	3–4 K	3–4 K
50	-	-	-	-	-	3–4 K

Tloušťka stěny S [mm]	Ozubení (Z_pZ) Vnější průměr profilu D_p [mm]					
	150	200	300	500	750	1000
2	10–14 S	10–14 S	8–12 S	6–10 S	5–8 S	5–8 S
3	8–12 S	8–12 S	6–10 S	5–8 S	4–6 K	4–6 K
4	6–10 S	6–10 S	5–8 S	4–6 K	4–6 K	4–6 K
5	6–10 S	5–8 S	4–6 K	4–6 K	4–6 K	3–4 K
6	5–8 S	5–8 S	4–6 K	4–6 K	3–4 K	3–4 K
8	5–8 S	4–6 K	4–6 K	3–4 K	3–4 K	3–4 K
10	4–6 K	4–6 K	4–6 K	3–4 K	3–4 K	2–3 K
12	4–6 K	4–6 K	3–4 K	3–4 K	2–3 K	2–3 K
15	4–6 K	3–4 K	3–4 K	2–3 K	2–3 K	2–3 K
20	3–4 K	3–4 K	2–3 K	2–3 K	2–3 K	2–3 K
30	3–4 K	2–3 K	2–3 K	2–3 K	1,4–2 K	1,4–2 K
50	2–3 K	2–3 K	2–3 K	1,4–2 K	1,4–2 K	1,4–2 K
75	-	2–3 K	1,4–2 K	1,4–2K	1,4–2 K	0,75–1,25 K
100	-	-	1,4–2 K	0,75–1,25 K	0,75–1,25 K	0,75–1,25 K
150	-	-	-	0,75–1,25 K	0,75–1,25 K	0,75–1,25 K
200	-	-	-	0,75–1,25 K	0,75–1,25 K	0,75–1,25 K

PEVNÝ MATERIÁL (D = mm)

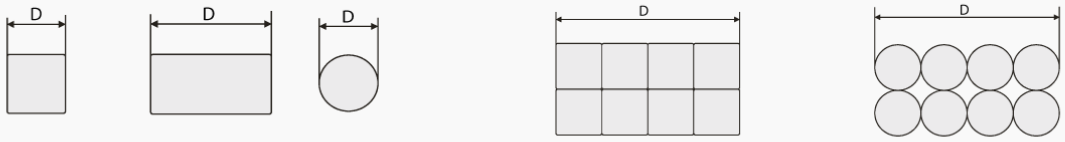

Konstantní ozubení	
délka řezu D	ozubení (Z_pZ)
do 3 mm	32
do 6 mm	24
do 10 mm	18
do 15 mm	14
15–30 mm	10
30–50 mm	8
50–80 mm	6
80–120 mm	4
120–200 mm	3
200–400 mm	2
300–800 mm	1,25
700–3000 mm	0,75

Variabilní ozubení	
délka řezu D	ozubení (Z_pZ)
do 30 mm	10–14
20–50 mm	8–12
25–60 mm	6–10
35–80 mm	5–8
50–100 mm	4–6
70–120 mm	4–5
80–150 mm	3–4
120–350 mm	2–3
250–600 mm	1,4–2
500–3000 mm	0,75–1,25

Přes výše uvedené návrhy berte v úvahu doporučení Vašeho dodavatele a nechte si od něj odborně poradit i přesto, že výrobci Vám často doporučí vlastní pilové pásy.

3. Ovládání stroje / Bedienung der Maschine / Machine control

3.1. Control elements

Control element	Description
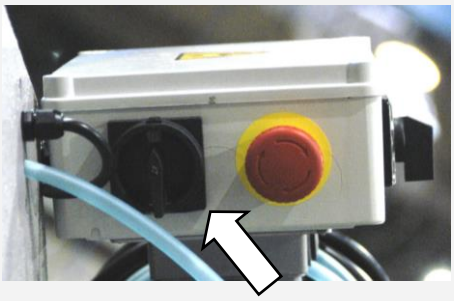	1. Main switch of the machine
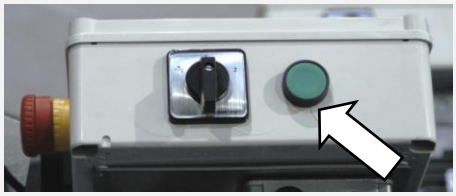	2. Switch of the saw band speed With the switch you can choose the saw band speed and possibility to rinse the saw band. • position 1...40 m.min^{-1} • position 2... 80 m.min^{-1} • symbol of cooling –saw band drive is switched off and the cooling pump is running (rinsing).
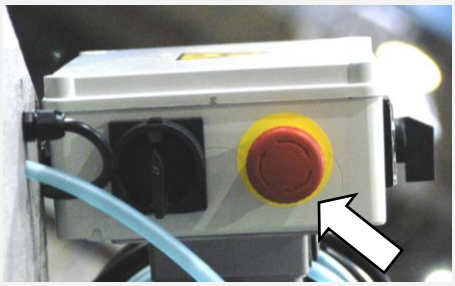	3. STOP of the saw band drive / Emergency Stop Switch It is used for stopping of the saw band speed. Note: The saw arm sinking is not stopped by pressing button! Saw arm sinking is necessary to stop by adjusting valve on the lifting cylinder!
	4. START of the saw band drive

3.2. Machine controling

3.2.1. Start of the machine

Start the machine with the main switch which located on the electric distribution box.

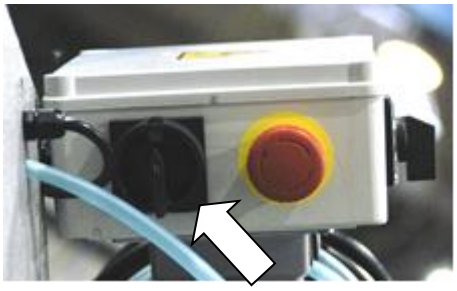

3.2.2. Cutting

1. Open the vice of the band saw.
2. Set the length stop to the desired length of the material.
3. Set the desired cutting angle.
4. Insert the material and pull it up to the length stop.
5. Pull up vice jaw about 5 mm from the material by hand wheel using the hand wheel.

6. Tighten the material with the clamping lever.

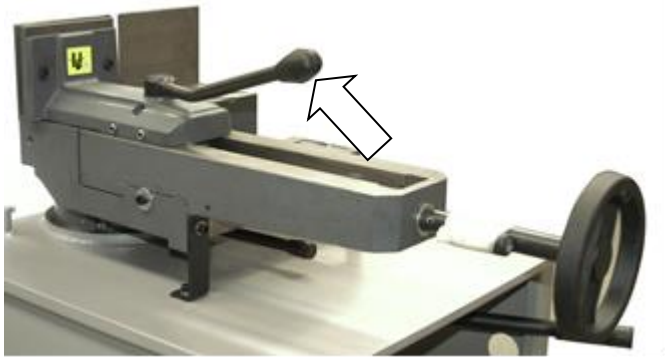

7. Set the movable guiding cube as close to the material as possible.

8. Set the saw band speed.
9. Start saw band drive by button START.

> ***Attention***
> *Saw band drive is possible to stop by button **STOP** or by button **Emergency Stop Switch** in emergency causes during cutting.*
> ***Attention!***
> *Saw frame sinking is possible to stop by governing valve closing!*

10. Set the speed of the saw frame sinking.
11. Close the governing valve of the sinking. Lift the saw frame to the top position after cutting.
12. Remove the cut. Now you can repeat whole progress.

3.2.3. Setting of the material length

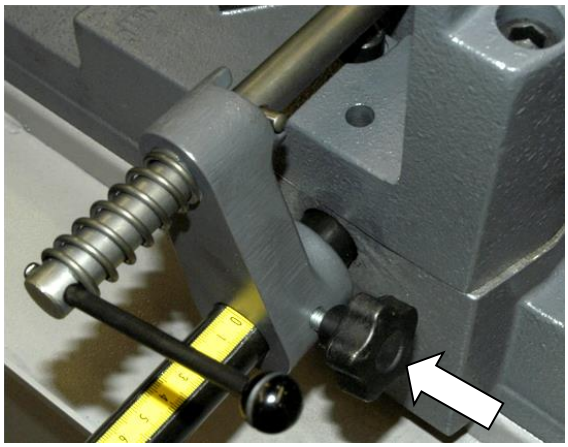

1. Loosen the clamping screw of the length stop

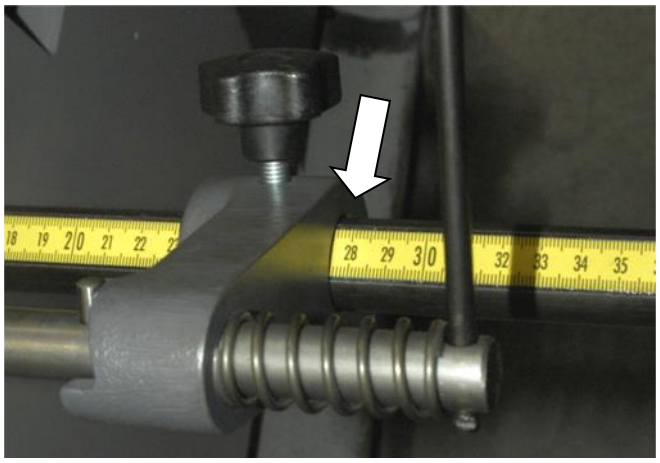

2. Shift the length stop to the required length and tighten the clamping screw.

Warning!
The length stop enables a gap between the length stop slat line and the material to avoid clenching the saw band in the cut during cutting. Set the gap of the length stop by turning the lever in the direction of the arrow.

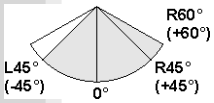

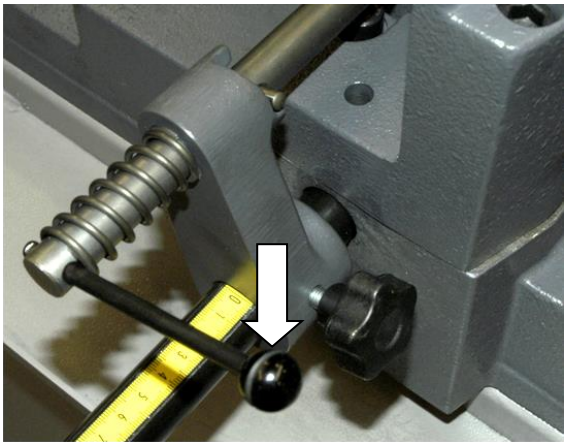

3.2.4. Angular cut setting

The band saw **ProfiCut 275.230 DG** alollows angular cuts at angles from **-45°** to **60°**.

There are limit stops on the saw for easy setting of extreme positions of **-45° – 0° – 45° – 60°**.

Picture	Description
	1. Raise the saw frame and turn the turning console clamping lever to the left.
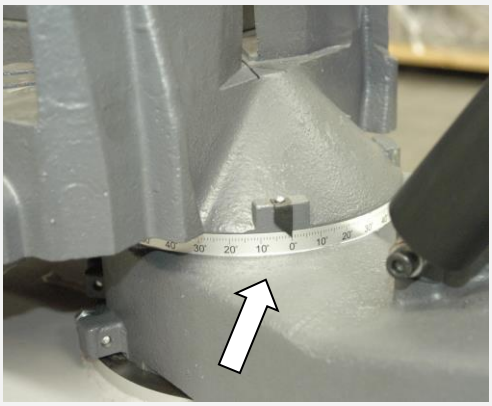	2. Set the required angle of the cut according to the scale on the turning console.

Picture	Description
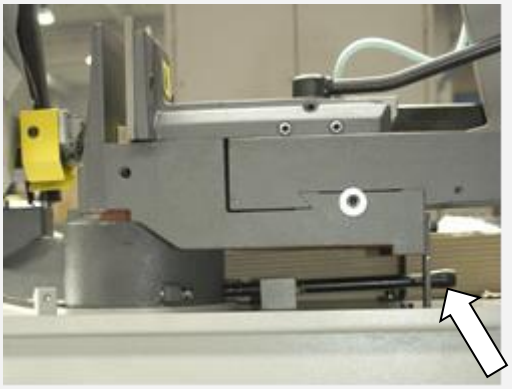	3. The console is provided with a stop piece which stops the console in the 0°angle. It is necessary to pull out the lever which is situated under the base of the vice, when you want to turn the console over the stop piece.
	4. Tighten the clamping lever of the console.

5. Shift the vice according to the requested angle of cutting. For angles smaller than zero shift the vice to the right, for zero angles and larger to the left.

angle < 0°	angle ≥ 0°
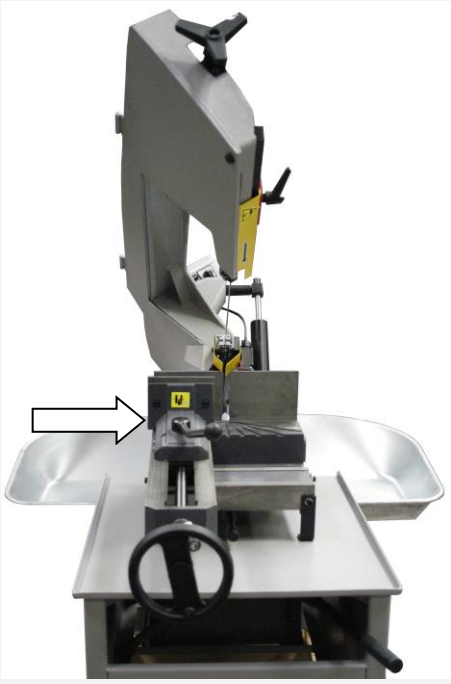	

3.2.5. Setting of the optimal span of the guiding cube

For reaching a smooth and accurate cut it is necessary to move the left guiding cube as close to the cut material as possible.

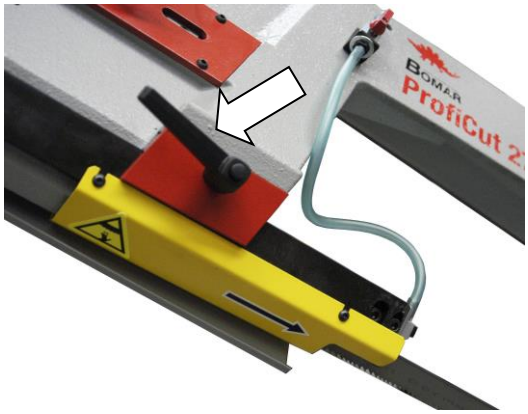
BOMAR
ProfiCut 2

1. Loosen the lever of the left guiding lath and move the left part of the saw band guide so that the edge of the left guiding cube will be as close to the material as possible.
2. After setting the left guiding elements fasten the lever of the guiding lath.
3. Tighten the lever of the guiding lath and check the setting of the guiding cube one more time to avoid collision with the vice jaw or clamping table.

3.2.6. Cutting speed setting

Picture	Description
	• speed **40 m.min^{-1}** – turn speed switch into pos. no. **1** • speed **80 m.min^{-1}** – turn speed switch into pos. no. **2**

3.2.7. Setting the speed of the arm sinking to the cut

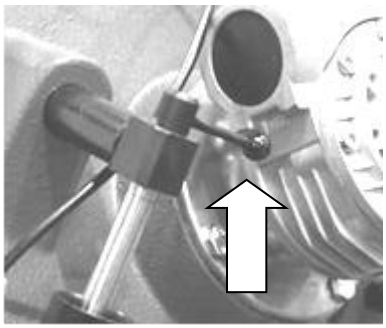

Set the desired speed of the arm sinking to the cut by lever on the lifting cylinder.
Arm sinking is stopped by adjusting valve closing.

3.2.8. Cooling

The cooling pump is alwais switched on together with the saw band drive and the coolant flows to the cutting place through a hose.
The tap on the inlet hose is intended for regulation or for closing of the coolant flow.

If it is necessarry to rinse the working space with the coolant after a cut is finished, turn the control button on the electric distribution box to the position which is marked with the symbol of cooling. After you switch the button to this position the cooling pump is swithed on even if the drive of the saw band is switched off.

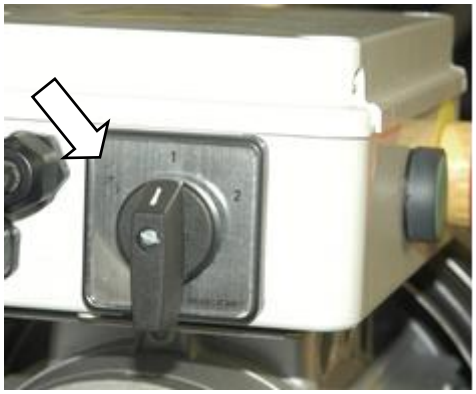

3.3. Material insertion

- Never walk under a suspended load!
- Never climb onto the gravity-roller conveyor!
- Do not hold the material for clamping material to the vice! The vice can cause injury!

3.3.1. Handling agent selection

- Use the strong handling agents to lift and transfer the material!
- Handle with the material only with the lift truck or use the suspension strands and the crane!
- Do not use the lift truck or crane in case that you do not have the license to handle with it!

3.3.2. Insertion

Insert material to the vice and ensure that the material cannot move in the vice or fall from the vice after the clamping. If you cut long pieces of the material (for example rod, tube), you must use the roller conveyors for material shifting to the band saw. Contact Bomar for more information about roller conveyors

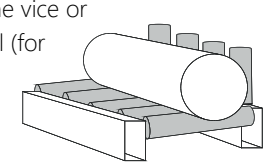

Make sure the conveyor is long enough and the material cannot tip off the conveyor.

Be especially careful with round materials that it always stays on two vertical rollers and that it cannot fall off the conveyor!

3.3.3. Bundle material cutting

If you want to cut the material in the bundle, there are suggestions for the positioning of bundles

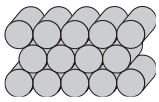

Round material bundle: Take care especially with round material that the bars are put according to the picture. If the bars are put differently, you may have problems with movement.

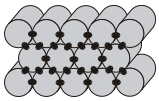

Always weld the material at the rear end of the bundle to secure it from moving.

Before welding always, switch the machine off at the main switch! The magnetic fields, which often occur during welding, may damage the controls!

Square material bundle:

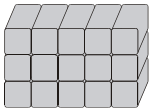

4. Údržba stroje / Wartung / Machine service

4.1. Saw band dismantling

1. Lift the saw frame to the top position. Stop the saw frame in top position by control valve.

2. Dismantle yellow protective cover of the saw band. The cover is clamped with two screws.

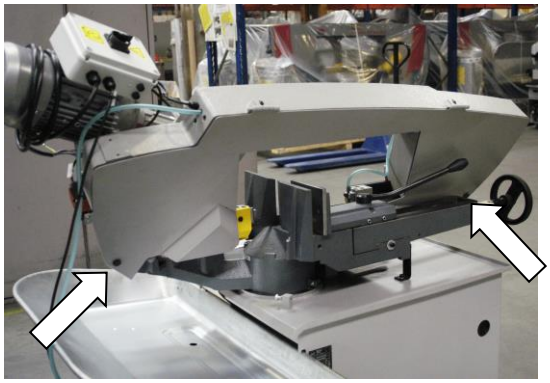

3. Dismantle back covering sheet metal of the saw frame. The covering sheet metal is clamped with two screws with plastic head.

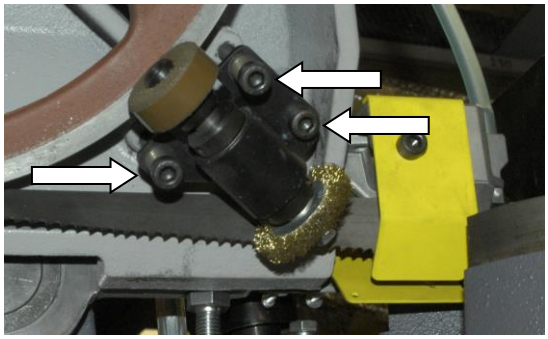

4. Release brush holder and turn it. The brush must not defend saw band dismantling.

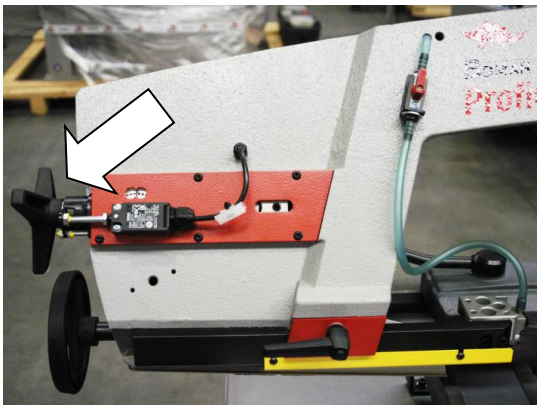

5. Turn by stretching star to the left side, release saw band stretching and pull saw band from blade wheels.

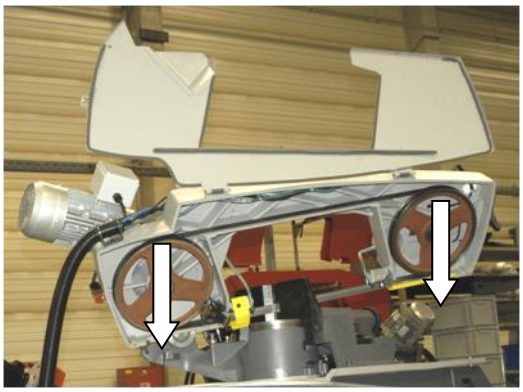

6. Pull up the saw band from the guiding cubes.

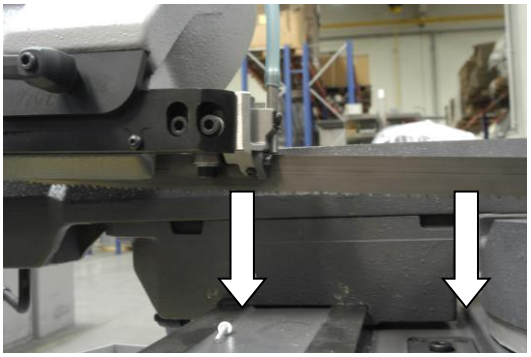

7. After that pull out the band carefully from the guiding cubes.

4.2. Saw band installation

1. Prior to installation, clean all track wheels, guide cubes and inner side of the arm thoroughly of all traces of chips and dirt. *Keep in mind the teeth direction when installing the saw band.*

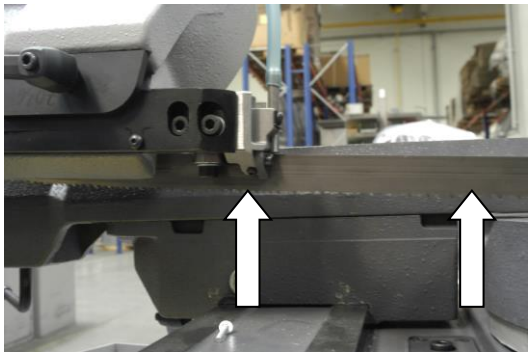

2. Insert new saw band in the guide cubes. Make sure the saw band runs between both guide rollers and it is pushed all the way to the top.

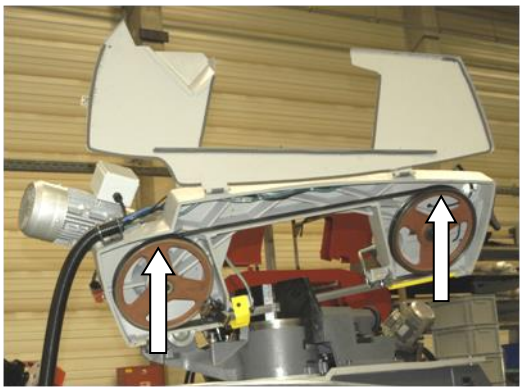

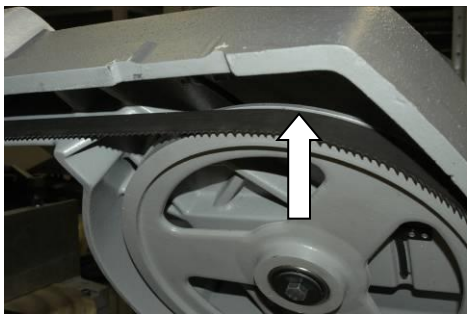

3. Put the saw band on both guide wheels. Make sure that the saw band ridge fits tightly to the wheel rim. Then push the saw band as far back as possible.

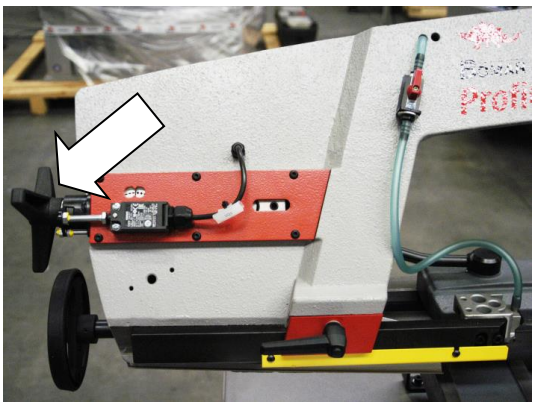

4. By turning the stretching star to the right, you will stretch the saw band slightly. Remove the plastic cover of the saw band teeth.

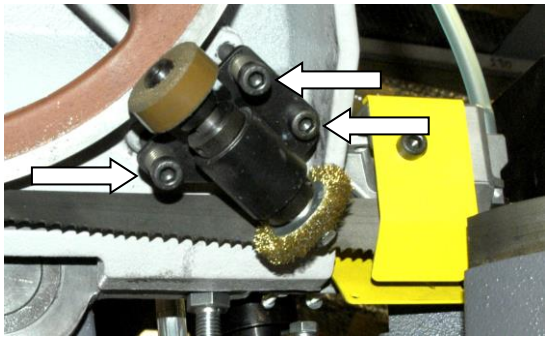

5. Put the brush into the function position and screw up the holder.

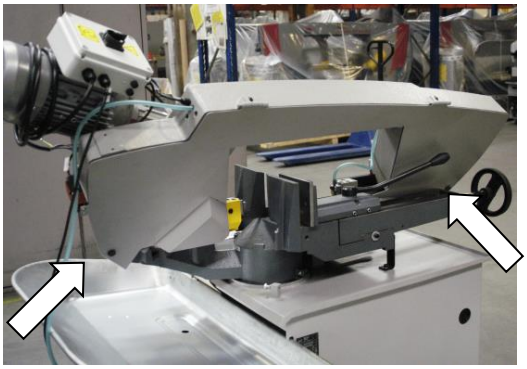

6. Install the rear protective cover of the frame.

7. Install the yellow protective covers of the band.

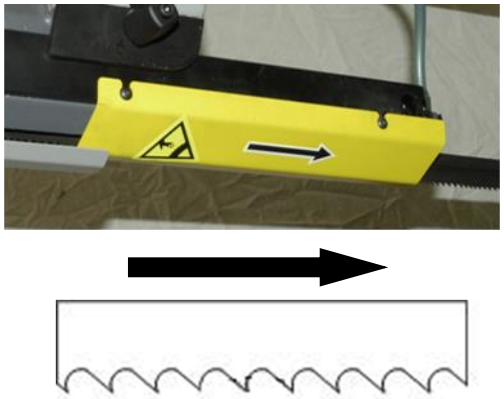

Arrow on the cover must agree with the direction of the teeth. If it does not, you have to flip the saw band.

4.3. Saw band stretching and inspection

Right saw band stretching is one of the most important criteria's, which influents accuracy and saw band service life. Stretch the saw bands according to the selected saw band and the band saw. Keep the recommendation of your manufacturer.

Pilový pás Sägeband Saw band	Napětí pilového pásu Sägebandspannung Blade tension	Napětí pilového pásu PSI (pro Tenzomat) Sägebandspannung PSI (für Tenzomat) Blade tension PSI (for Tenzomat)
20 x 0,9 mm	160 $N.mm^{-2}$	23 500
27 x 0,9 mm	180 $N.mm^{-2}$	26 500
34 x 1,1 mm	210 $N.mm^{-2}$	30 500
41 x 1,3 mm	240 $N.mm^{-2}$	35 000
54 x 1,3 mm	240 $N.mm^{-2}$	35 000
54 x 1,6 mm	280 $N.mm^{-2}$	40 600
67 x 1,6 mm	290 $N.mm^{-2}$	42 000
80 x 1,6 mm	300 $N.mm^{-2}$	43 500

4.3.1. Saw band stretching

1. The saw band must not fall from the wheels after setting.

2. Install the Tenzomat on the saw band and secure it with screws.
3. Stretch the saw band until it is stretched to the recommended value.

For a quick control of the tension of the band there is an indicator near the tightening star. If the indicator agrees with the picture bellow, the band is stretched correctly.

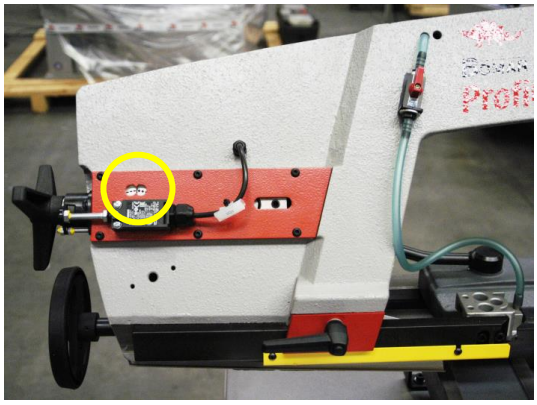

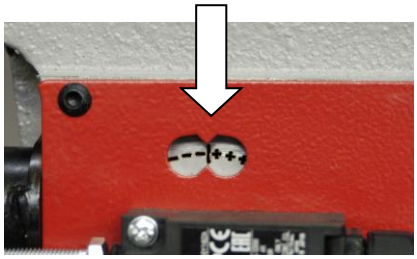

4.3.2. Saw band run inspection

If the run is not correct, the following problems may occur:

- The saw band falls from the wheels – The saw band and protective cover can be damaged.
- The saw band runs on the wheel rim – The saw band and wheel rim can be damaged

Process control:

1. Start and stop saw band drive.
2. Stop the main switch!
3. Open rear cover of the saw frame.
4. Check saw band placing on the wheels.

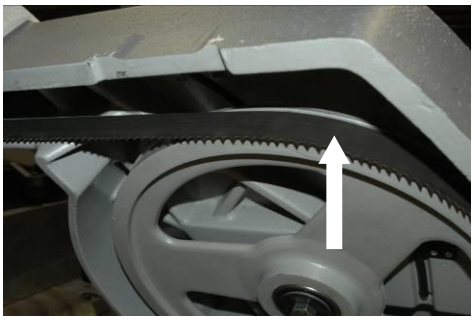

- If the distance of the rear part of the saw band from wheel rim is 1 mm, setting is right.
- If the distance is bigger than 1 mm, or the saw band runs on the wheel rim, saw band run must be set.

4.4. Adjustment

4.4.1. Saw band run adjustment

The saw band run is set with screw in the stretching cube on the saw frame. Optimal distance has been determined at 1 mm.

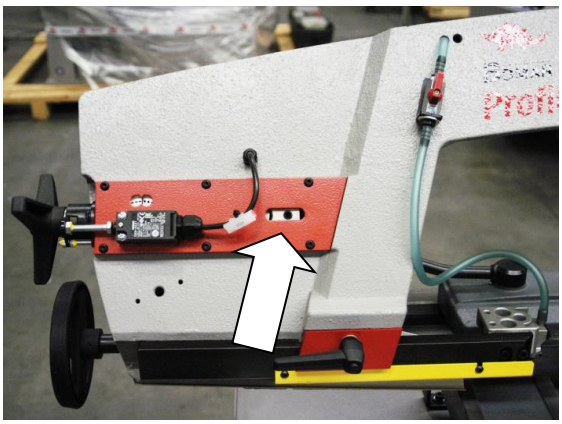

- Turn by screw to the right, the saw band approximates to the stretching wheel rim.
- Turn by screw to the left, the saw band departs from the stretching wheel rim.

4.4.2. Hard metal guides adjustment

Hard metal guides adjustment is one of the most important criterions which influences cutting accuracy and saw band life. Therefore, it is essential to check regularly that hard metal guides adjustment is correct.

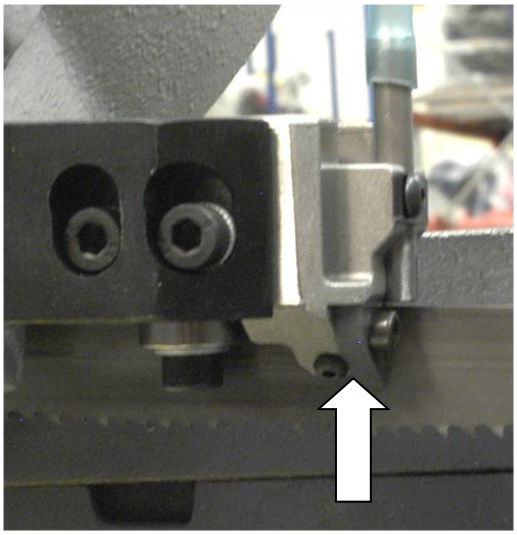

1. Tighten the stop screw on the rear side of guide cube so that the band cannot move.
2. Release the stop screw and at the same time grip the saw band by hand and check if the hard metal guide does not put up to much resistance against the movement of the band. As soon as it is possible to move the band without resistance, the hard metal guides are adjusted.
3. Be sure that the hard metal guides do not put up to much resistance otherwise the lifetime of the saw band and drive decreases.

4.4.3. Guide cubes adjustment

Cutting quality and saw band life is also dependent on guide cubes adjustment.

Therefore, this adjustment has to be checked periodically.

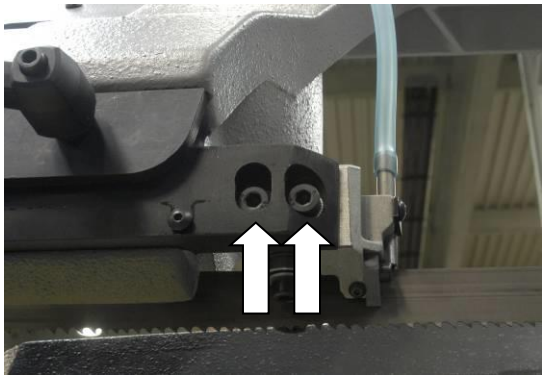

1. Loosen both tightening screws of the guide cubes and push it carefully to the band. Make sure the saw band is not bent; otherwise, this cube will push on the band and damage it.
2. Fasten both tightening screws again.

> ***Notice:***
> *If the guide cube is correctly adjusted, the upper edge of the cube and the ruler are parallel.*

4.4.4. Brush adjustment

The brush for chip removal from the saw band influences cutting durability, saw bandlifetime and wheels lifetime, hard metal guides and finally the cut accuracy. Brush adjustment must be checked every shift.

1. Remove the cover of the saw arm.

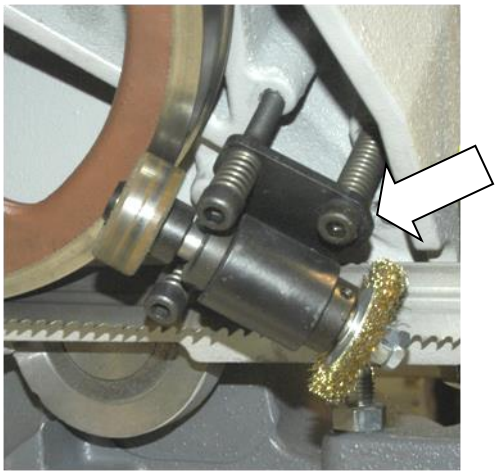

2. Adjust the brush to the saw band by turning the adjustment screw

The brush must touch the teeth of the saw band.

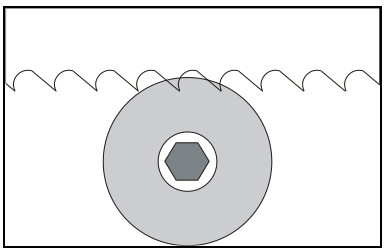

Attention!
The end of the brush must not reach the teeth bottoms!

3. In case the brush does not turn properly (the driving wheel of the brush slips on the saw band driving wheel) press the driving wheel of the brush closer to the saw band driving wheel using the adjustment screws (see arrows)

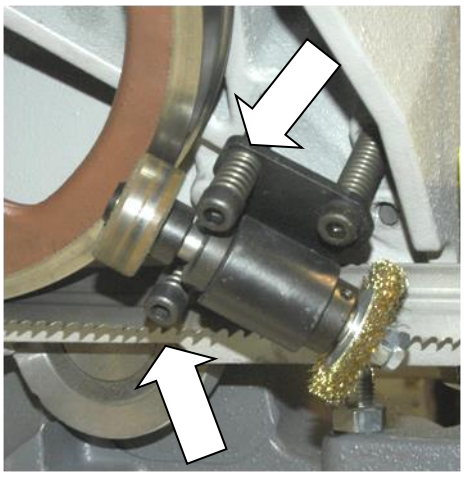

> ***Attention!***
> *Do not tighten the screw with brute force!*
> *If the chip removing brush is correctly fastened the brush turns smoothly with the saw band.*

4. Put the arm cover back.

4.4.5. Adjusting the limit switch of the saw band stretching

After the saw band is replaced, the limit switch setting must be checked. If the limit switch is not set correctly, the band is stretched either too much or too little.

1. Stretch the band with help of the TENZOMAT to an optimal value (Tenzomat chart)

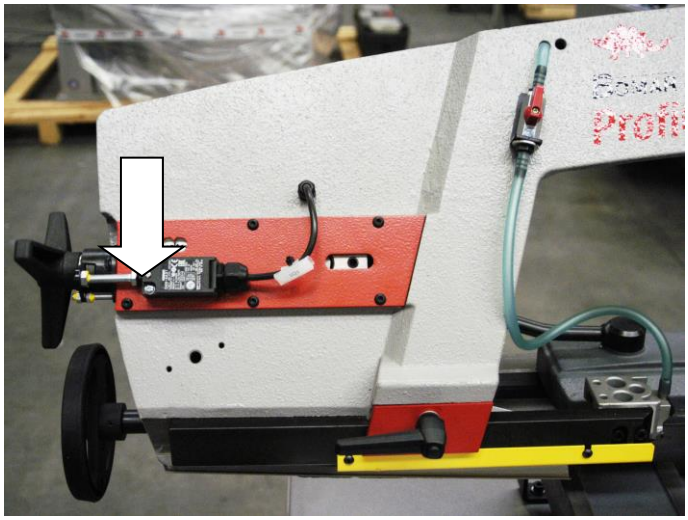

2. Release the nut on the stop screw
3. Start the band drive. Two scenarios may occur:
   - If the engine is switched on, but it does not run, turn the screw to the left until the engine starts to run

- If the engine runs turn the screw to the right until it stops, then turn the screw shortly to the left until the engine starts running again

4. Fasten the stop screw with the nut and check the setting of the switch again.

4.4.6. Saw frame lower position stop adjustment

The lower stop limits the lowest position of the saw frame. This stop has to be checked at least once a month. If the lower stop is adjusted incorrectly, the loading surface of the table can be cut too deeply or the material will not be cut completely

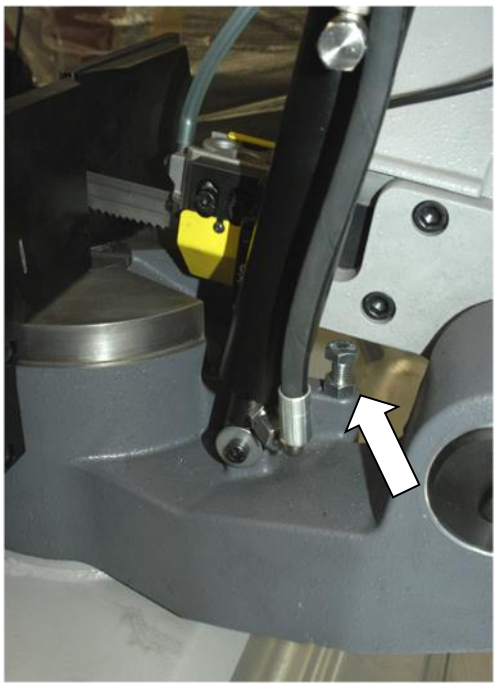

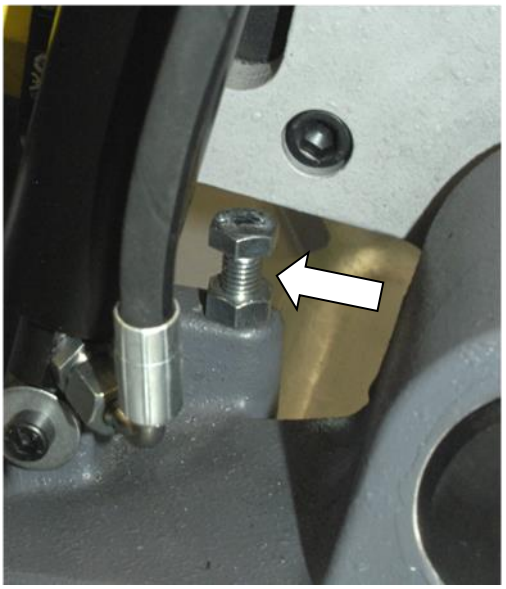

1. Raise the saw frame to the upper position
2. Release the nut of the adjusting screw and adjust the stop
3. Fasten the adjusting screw with the nut again
4. Set the limit switch of the lower arm position

4.4.7. Adjustment of the limit switch of saw frame lower stop

If you have adjusted the lower stop of the saw frame, the limit switch adjustment inspection is required

Setting check

Lower the arm to the lowest position. If the arm lays on the lower stop and the switch reacts, the setting is correct. In other case carry out the switch setting

Switch setting

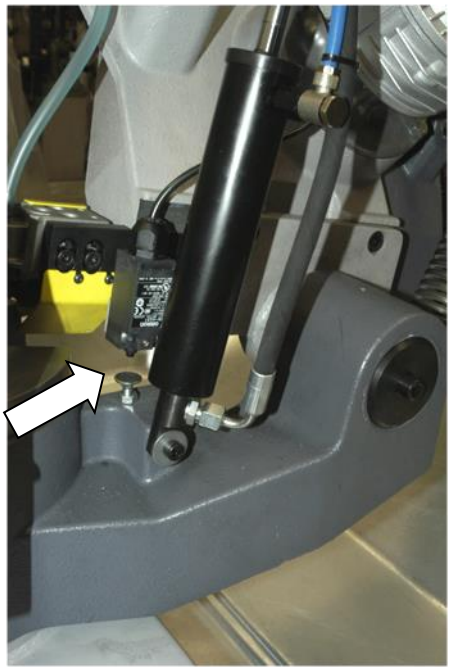

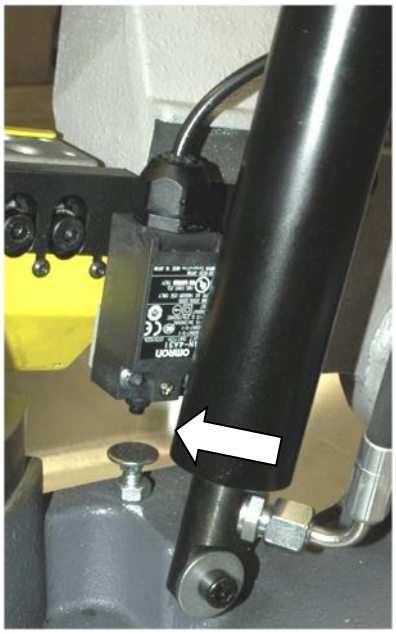

1. Release the nut of the stop screw and screw down the stop screw
2. Lower the arm to the lower stop and turn on the band drive
3. Screw out the stop screw until the band driver stops
4. Secure the screw with nut again and check the limit switch setting once more

4.5. Cooling agents and chips disposal

The quality of the cooling agent will deteriorate due to:	If the solution is too weak:	If the solution is too strong:
• use of contaminated water • impurity • outside oil contamination (hydraulics, gears) • high operating temperatures • lack of air circulation • wrong concentration	• corrosion protection is diminished • lubrication decreases • microbial attack is more likely	• the cooling ability is decreased • foam behaviour increases • emulsions stability deteriorates • sticky residue develops

4.5.1. Coolant device inspection

The state of the cooling agent has significant influence on the cutting quality and on the operational life of the machine. Lifetime of the cooling liquid is 1 year, after this time we recommend change the cooling liquid. This time is dependent on the degree of pollution cooling liquid (especially with oils) and on the other factors.

Check level of the cooling liquid and function of the pump periodically!

> ***Note:***
> *If the state of the cooling liquid is not satisfactory, the cooling liquid must be changed.*

Check the state of the cooling agent according to the following table:

Testing	Interval	Method	Condition	Precaution
Liquid level	daily	visually	too low	after concentration check, refill with water or emulsion
Concentration	daily	refractometer densimeter	too high too low	refill water refill base emulsion
Smell	daily	by sense of smell	unpleasant smell	good ventilation, add biocides or renew coolant
Contamination	daily	by sense of smell	visible oil leaks, sludge fungi	surface cleaning, fix leaks, add biocides or fungicides, or coolant renewal after added system cleanser*
Corrosion-protection	when necessary	visually chip test Herbert-test	insufficient corrosion protection	test stability, if necessary – increase concentration or pH value
Stability	when necessary	refractometer	oiling	add concentrate, enquiries to supplier
Foam reaction	when necessary	shaking test	too much foam, foam disperses too slowly	avoid aeration, increase water hardness, ix with defoamer

* according to manufacturers' instructions

4.5.2. Chips disposal

Chips resulting from cutting operations must be disposed of in accordance with the relevant regulations.

- Let the chips drip excess fluid!.
- Fill a watertight container with the chips! Be careful that the container does not leak, because even after a long dripping time, they still contain coolant residue.
- *Place the container into the care of a disposal company equipped for the disposal of chips contaminated with cooling liquid.* In case the machine is equipped with micro-spray installation, the chips must also be handed over to a disposal company.

4.6. Greases and oils

4.6.1. Gearbox oils

In gearboxes, oil is used for the whole lifetime of the gearbox. We recommend replacing of the filling oil in case of repair.

Use oils with specification DIN 51517 in the gearboxes. Select the viscosity grade ISO VG according to the original oil fill.

Attention:
When replacing, use oils recommended by BOMAR or oils, which has comparable parameters from the other manufacturers.
Do not forget, that mineral and synthetic oils must not be mixed!

Recommended oils and quantity according to the type of the band saw

Band saw	Gearbox oil	Capacity
ProfiCut 275.230 DG	Paramo PP7	2,0 l
Swarf conveyer	Shell Tivela S 320	0,075 l

Comparative table of the gearbox oils

Manufacturer	Viscosity grade		
	ISO VG 100		ISO VG 100
BP	Energol GR-XP 100	BP	Energol GR-XP 100
Castrol	Alpha SP 100 Alpha MW 100	Castrol	Alpha SP 100 Alpha MW 100
Elf	Reductelf SP 100	Elf	Reductelf SP 100
Esso	Spartan EP 100	Esso	Spartan EP 100
Mobil	Mobilgear 627	Mobil	Mobilgear 627
ÖMV		ÖMV	
Paramo	PP 7	Paramo	PP 7
Shell	Shell Omala 100	Shell	Shell Omala 100
Total	Carter EP 100	Total	Carter EP 100

4.6.2. Lubricant greases

We recommend using lithium based saponified grease, class NGLI-2 for lubrication. Different greases are mixable, if their oil bases and consistence type are identical.

Comparative table of the lubricant greases:

Manufacturer	Type of the lubricant grease
BP	Energrease LS - EP
DEA	Paragon EP1
Esso	FETT EGL 3144
	Beacon EP 1
	Beacon EP 2
FINA	FINA LICAL M12
Klüber	Microlube GB0
	Staburags NBU8EP
	Isoflex Spezial
Optimol	Optimol Longtime PD 0, PD1, PD2
Shell Aseol AG	ASEOL Litea EP 806-077
Texaco	Multifak EP1

4.7. Machine cleaning

Clean the machine from the cooling liquid and impurities after every shift stopping. Conserve the guiding surfaces, mainly.

- Clamping jaws guiding of the vice.
- The guiding of the feeder.
- Loading surface of the vice.

4.8. Worn pieces replacement

4.8.1. Replacement of Guides with Hard Metals

The hard metal guides have to be replaced where they cannot be adjusted

1. Disconnect the cooling liquid supply tubing, dismantle the saw band and saw band-guiding cube.
2. Clamp the guiding cube in a bench vice.

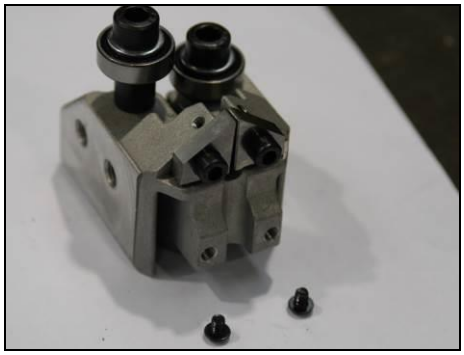

3. Loosen the fastening worms with Allen wrench.

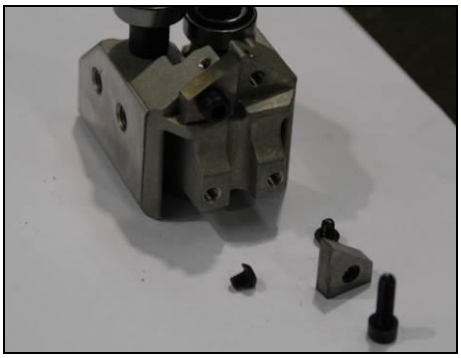

4. Unscrew the front screw that secures the hard metal guides.
5. Insert the new hard metal guides, screw them in firm and attach the guiding cube to the guide bar.
6. Install the saw band, set the hard metal guides and guiding cube.

Caution!
The vice must have aluminum jaws or an aluminum fixture must be inserted in the vice, to protect the pin from damages upon clamping.

4.8.2. Replacement of saw band guiding pulleys

If the saw band is not properly guided by the pulleys any more or if the pulley already shows visible traces of wear, they must be replaced.

CAUTION! Guide pulleys must be replaced on both guide cubes at the same time!

1. Disconnect the cooling liquid supply tubing, dismantle the saw band and saw band-guiding cube.

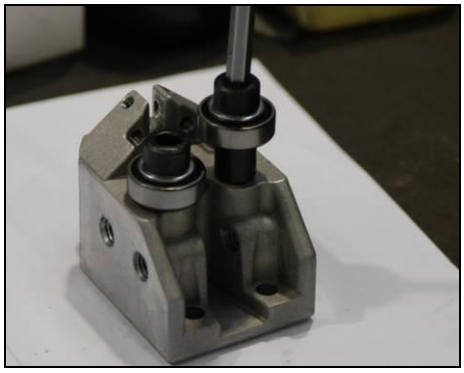

2. Clamp the guiding cube in a bench vice and remove both eccentric piece fastening screws.

3. Remove both guide pulleys from eccentric pieces.

4. Mount new guide pulleys onto eccentric piece and screw both eccentric pieces back in the guiding cube.

Optimum spacing between the saw band and guide pulley is 0.05 mm.

5. Insert test piece of the saw band (some 15–20 cm of it) into the guiding cube and set the eccentric pieces to a position that will allow the band to run in the middle of the groove. The groove is between the eccentric pieces fasteners. Guiding pulleys must not strongly press against the saw band, but must freely rotate.

6. Adjust also the hard metal guides to allow free passage of saw band between them with adequate play. Tighten the front screw of hard metal guides, then tighten the safety worms.

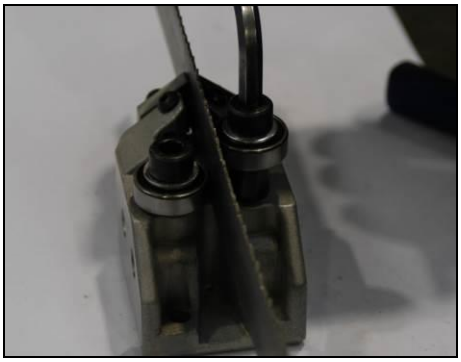

7. Now, the screws of both band-guiding pulleys must be tightened.
8. Install the guiding cube onto the guide bar. Install the saw band and adjust the guiding cubes.

4.8.3. Round brush replacement

If the chip removing brush is so worn, that it does not fulfil its function, the brush must be replaced.

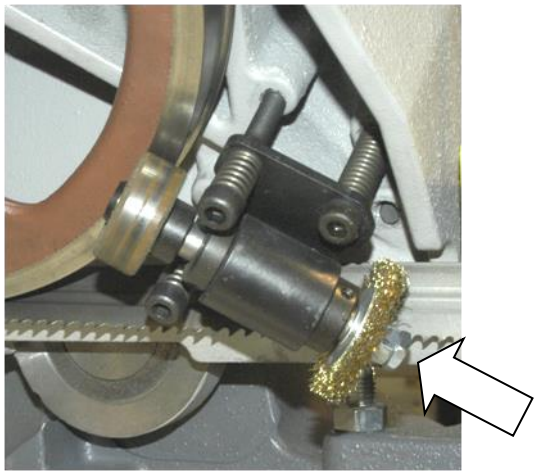

1. Remove the arm cover.
2. Release the nut of the brush, exchange the worn brush for a new one and screw the nut.
3. Set the brush to the saw band.
4. Put the covers back in place.

4.8.4. Stretching wheel replacement

1. Dismantle the saw band.

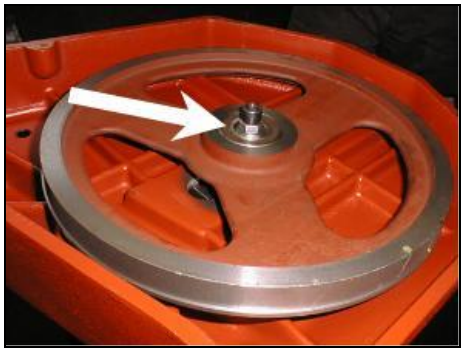

2. Screw off the screw of the stretching wheel and pull off the washer.
3. Screw on the auxiliary screw to the shaft of the stretching wheel.

4. Put on the three-leg puller on the stretching wheel and pull off it from the shaft.

5. If the lower bearing stays on the shaft, pull of it from the shaft with two-leg puller. Check both bearings; eventually replace them for a new.

6. Insert the retaining ring to the hole in the new stretching wheel.
7. Insert the bearing to the hole in the wheel and push it to the retaining ring.

8. Clean the shaft and oil it. Install the new stretching wheel on the shaft.

9. Install the distance ring on the shaft and push it to the lower bearing.

10. Install second bearing on the shaft and push it to the distance ring.

11. Install the washer and screw on the stretching wheel.
12. Install the saw band. Wheel replacement is ready.

4.8.5. Driving wheel replacement

1. Dismantle the saw band.

2. Screw of the fastening screw of the driving wheel and pull off the washer.

3. Screw on the auxiliary screw to the driving shaft.

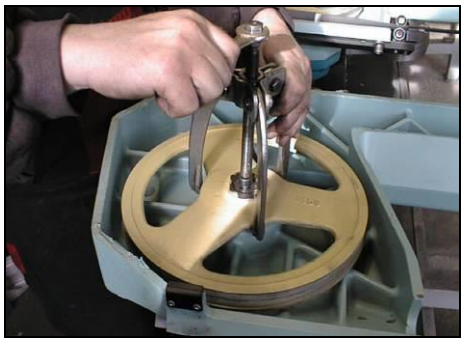

4. Install the three-leg puller on the driving wheel and pull off it from the shaft.

5. Check, if the feather and the driving shaft are not damaged. Contact your supplier for parts replacement.

6. If the shaft and the feather are in good order, clean them, oil them and install them on the driving shaft.

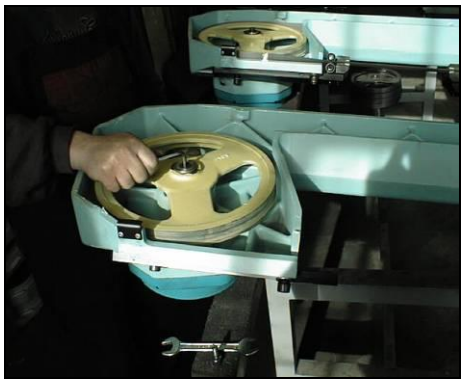

7. Install the washer and screw on the driving wheel.
8. Install the saw band.

5. Závady / Störungen / Troubleshooting

5.1. Mechanical problems

Problem		Possible causes	Repair
1. Slanting cut	-	Wrongly adjusted hard metal guides.	Set according to the chapter „Servicing and adjustment“
	-	Worn hard metal guides.	Replace to the chapter „Worn pieces replacement“
	-	Wrongly adjusted cubes of the saw band guiding.	Set according to the chapter „Servicing and adjustment“
	-	Worn bearings of the saw band guiding.	Replace according to the chapter „Worn pieces replacement“
	-	Wrongly adjusted swarf brush.	Set according to the chapter „Servicing and adjustment“
	-	Worn swarf brush.	Replace according to the chapter „Worn pieces replacement“
	-	Insufficient saw band stretching.	Rise the saw band stretching and set the limit switch.
	-	Wrongly chosen tooth system of the saw band.	Replace the saw band and keep the instructions of manufacturer on new saw band choice.
	-	Worn saw band.	Replace the saw band.
	-	Wrongly balanced roller conveyor.	Set the roller conveyor.
	-	Dirty feeding board.	Cleanse the feeding board from debris, chip and residue material.
	-	Guiding arm and guiding cube are loosened.	Clamp the guiding arm.
	-	Guiding arm and cube are too far from the material.	Set the guiding cube to the material.
	-	Too fast cutting rate.	Lower the material feeding speed.
	-	Unexpected oscillation in material quality.	Set the cut and feeding speed to the relevant material.
2. The cut is not cut upon desired angle	-	Securing lever is loosened.	Check the securing lever efficiency and carry out its adjustment according to chapter „Servicing and adjustment“.
	-	Set angle does not match the cut angle.	Check the angle adjustment with a protractor and possibly set it according to chapter „Servicing and adjustment“.
	-	Insufficient saw band stretching.	Stretch the saw band and set the limit switch according to chapter „Servicing and adjustment“.
	-	Guiding arm and guiding cube are loosened.	Fasten the guiding arm and the cube.
	-	Dirt between material and clamping jaw.	Cleanse the material and mating jaw.
3. Short lifetime of the saw band	-	Insufficient saw band stretching.	Raise the tightening of the saw band set the scanner of saw band tightening according to chapter „Servicing and adjustment“.
	-	Worn swarf brush.	Check the swarf brush condition and replace it in case of excessive use as described in chapter „Worn pieces replacement“

	-	Wrongly adjusted swarf brush.	Check swarf brush adjustment, set it according to chapter „Servicing and adjustment“
	-	Over stretched saw band	Lower stretching of the saw band and set the limit switch of the saw band stretching according to chapter „Servicing and adjustment“
	-	Wrongly adjusted hard metal guides.	Check the adjustment of the hard metal guides and carry out adjustment as described in chapter „Servicing and adjustment“
	-	Worn hard metal guides of the saw band.	Check the condition of the hard metal guide and if it is too worn, replace hard metal guides according to chapter „Worn pieces replacement“
	-	Worn saw band guide bearings.	Check guiding bearings and if you notice some sort of excessive damage, replace them according to chapter„Worn pieces replacement“
	-	Wrongly adjusted guiding cubes of the saw band.	Set guiding cube according to chapter „Servicing and adjustment“
	-	Wrongly adjusted down feed and saw band speed.	Adjust the feeding and speed of a saw band according to values published by saw band manufacturer.
	-	Different material quality.	Adjust feeding and speed of a saw band according to desired material (try cut-test).
	-	Low-class saw band	Replace the saw band (contact your local accessory supplier for more information)
	-	Wrongly chosen saw band tooth system.	Replace the saw band and keep instructions of the manufacturer on the choice.
	-	Wrongly adjusted tracking.	Check the space between top of a saw band and driving wheel. Perhaps adjust the tracking as described in chapter „Servicing and adjustment“
4. Insufficient cut output.	-	Worn saw band.	Replace the saw band and keep instructions of the manufacturer on the choice.
	-	Wrong saw band tooth system.	Replace the saw band and keep instructions of the manufacturer on the choice.
	-	Wrongly set down feed and speed of a saw band.	Set feed and speed of a saw band according to values published by saw band manufacturer.
5. The cut is not finished.		Wrongly adjusted lower stop point of the saw frame.	Check lower limit switch and screw.
		Stop point surface is messed-up.	Cleanse stop point surface of the limit switch from debris and residue material.
6. The saw bands are cracked		In stretching wheel is wrong adjusting geometry.	Adjust distance band from recess wheel c.2 mm according to operating instructions.
		Hard metal plates of circuit saw band are not adjusting.	Hard metal plates of circuit saw band must be adjusting according to operating instructions.
		Guiding cubes are not adjusting (bearings + hard metal circuit)	Guiding cubes must be adjusting (bearings + hard metal circuit) according to operating instructions.
		Bearings of guiding cubes are used (rolling elements are damaged or outside ring of bearing has conical form).	Bearings of guiding cubes must be replaced. Bearings must be adjusting according to operating instructions.

7. Damage tooth system of the saw band	-	In gripping the lifting cylinder is backlash.	
	-	Squeezed pin upper or downer holder of the lifting cylinder.	Exchange complete upper or downer holder of lifting cylinder.
8. The saw is cut downing.	-	Geometry of hardmetal guiding cubes is wrong adjusted.	Hardmetal guiding cubes must be adjusted.
	-	Bearings of guiding cubes are used.	Bearings of guiding cubes must be replaced.

5.2. Electric problems

Problem		Possible causes	Repair
1. Machine is not possible start.	-	In socket is not voltage	Line voltage must be checked.
	-	Transfer relay is closed (thermal protector)	Each FA relay must be checked.
2. When cut is finished, the frame is not raising.	-	Bottom limit switch is adjusted wrong.	Bottom limit switch must be adjusted according to chapter ADJUSTING.
3. Electric motor and pump are without voltage. Between contactor and thermal protector is not voltage.	-	Wrong contactor.	Replace contactor of engine.
4. Cooling is not active		Lack of cooling agent.	Fill the tank with cooling agent.

6. Schémata / Schemas / Schematics

6.1. Elektrické schéma / Elektroschema / Wiring diagrams

6.1.1. 3x400V+N+PE, 50Hz

Obsah / Table of contents / Inhalt

Strana Page Seite	Název strany Page name Seitenname	Datum Date Datum
/1	Úvodní strana/Start page/Startseite	28.05.2021
/2	Obsah / Content / Inhalt	14.01.2022
/3	Kusovník artiklů / Parts list / Artikelstückliste	14.01.2022
/3.a	Kusovník artiklů / Parts list / Artikelstückliste	13.12.2021
/3.b	Kusovník artiklů / Parts list / Artikelstückliste	13.12.2021
/4	Rozmístění prvků / Placement of elements / Platzierung der Elemente	13.12.2021
/5	Silová část / Power part / Feld partie	13.12.2021
/6	Ovládací část / Control part / Steuerteil	14.01.2022
/7	Příslušenství / Accessories / Zubehör	14.01.2022

Kusovník artiklů / Parts list / Stückliste

Označení přístroje Device identification Geräteidentifikation	Typ přístroje Device description Gerätebeschreibung	Objednací číslo Type number Typennummer	Výrobce Manufacturer Hersteller	Skladové číslo Part number Lagernummer	Množství Quantity Menge	Umístění Location Stelle
-SA1	Štítek - Mikroniser-voda Tag - Microniser-water Label - Mikronisierer-Wasser	30.Y330-065	BOMAR s.r.o.	30.Y330-065	1	/5.6
-HA1	Laser Laser Laser	Laser 24AC/DC	HOFMAN SYSTEMS s.r.o.	91.100.109	1	/7.4
-SA1	Přepínač - dvě polohy Switch 2 positions Schalter 2 Positionen	ZB5-AD2	Harmony	91.060.025	1	/5.6
-SA2	Přepínač - dvě polohy Switch 2 positions Schalter 2 Positionen	ZB5-AD2	Harmony	91.060.025	1	/7.4
-VM	Mikronizér - 24VDC Microniser - 24VDC Microniser - 24VDC	70.728.3	I.L.C. SRL	99.150.004	1	/6.6
-FU1	Pojistka trubičková - 1A/250V, pomalá, 5x20 Tube fuse - 1A/250V, slow, 5x20 Rohrsicherung - 1A / 250V, langsam, 5x20	T1A/250V	ESKA	91.230.031	1	/5.7
-FU2	Pojistka trubičková - 700mA/250V, pomalá, 5x20 Tube fuse - 700mA/250V, slow, 5x20 Rohrsicherung - 700mA / 250V, langsam, 5x20	T700mA/250V	ESKA	91.230.069	1	/5.6
-FU3	Pojistka trubičková - 200mA/250V, pomalá, 5x20 Tube fuse - 200mA/250V, slow, 5x20 Rohrsicherung - 160mA / 250V, langsam, 5x20	T200mA/250V	ESKA	91.230.037	1	/7.4
-KM1	Ministykač - 4kW/400V, 3P Mini contactor - 4kW/400V, 3P Mini-Schütz - 4kW/400V, 3P	B6S-30-10-1.7-71	ABB	91.040.048	1	/6.9
-SA1	Nosič štítků Moeller Moeller label holder Moeller Etikettenhalter	M22S-ST-X	EATON	91.062.009	1	/5.6
-SB1	Total stop - hlavice + 2xNC Emergency-stop - button + 2xNC Not-Aus-Pilz - Taster + 2xNC	YW1B-V4E02R	IDEC	91.060.084	1	/6.1
-SQ3	Bezpečnostní koncový spínač - 2xNC Safety Limit Switch - 2x NC Sicherheitsendschalter - 2x NC	QKS8	KEDU	91.173.012	1	/6.6

The manufacturer reserves right to use an equivalent replacement device.

2

BOMAR, s.r.o. Těžební 1236/1 CZ 627 00, Brno	Stroj/Machine/Maschine: Proficut 275.230 DG	Název stránky/Name page/Name seiten: Kusovník artiklů / Parts list / Artikelstückliste	Číslo dok./Doc.No/Anzahl der Dokumente.: ES-101.193-B1/B2-V2.0 Napájení/Power supply/Einspeinsung: 3x400V+N+PE, 50Hz Zpracoval/Processed /Hat verarbeitet: Datum/Date/Datum: 14.01.2022	List/Page/Seite: 3 Listů/Pages/Seiten: 9

Kusovník artiklů / Parts list / Stückliste

Označení přístroje Device identification Geräteidentifikation	Typ přístroje Device description Gerätebeschreibung	Objednací číslo Type number Typennummer	Výrobce Manufacturer Hersteller	Skladové číslo Part number Lagernummer	Množství Quantity Menge	Umístění Location Stelle
-ZD1	Napájecí zdroj - 1x230VAC/24VDC, 0,63A Power supply - 1x230VAC/24VDC, 0,63A Energieversorgung - 1x230VAC/24VDC, 0,63A	HDR-15-24	MEAN WELL	91.085.042	1	/5.7
-SQ1	Koncový spínač - 1NC+1NO Limit switch - 1NC+1NO Endschalter - 1NC+1NO	D4N-4A31	OMRON	91.173.007	1	/6.2
-SQ2	Koncový spínač - 1NC+1NO Limit switch - 1NC+1NO Endschalter - 1NC+1NO	D4N-4A31	OMRON	91.173.007	1	/6.4
-M1	Dvourychlostní asynchronní motor 0,7/1,1kW; 3x400V Two speed asynchronous motor 0,7/1,1kW; 3x400V Zwei Geschwindigkeit Asynchronmotor 0,7/1,1kW; 3x400V	MSD 90L- 8/4 B14-FT115 230+bimetal	OPIS Engineering k.s.	91.001.381	1	/5.3
-QS1	Spínač vačkový - 3 polohy Switch cam - 3 positions Schaltnocken - 3 positionen	S10-60169	SALZER	91.171.013	1	/5.3
-QS2	3 pólový odpínač, 16A Disconnector - 3P, 16A Trennschalter - 3P, 16A	SAP16-03-M1	SALZER YUEQING LEYI	91.170.028	1	/5.2
-M2	Čerpadlo chlazení 80W Cooling pump 80W Kühlpumpe 80W	PA70-M	SAP srl	91.020.035	1	/5.6
-FU1	Svorka pojistková Fuse terminal Sicherungsklemme	SKJ - 2.5D	SMS Technology	91.251.102	1	/5.7
-FU2	Svorka pojistková Fuse terminal Sicherungsklemme	SKJ - 2.5D	SMS Technology	91.251.102	1	/5.6
-FU3	Svorka pojistková Fuse terminal Sicherungsklemme	SKJ - 2.5D	SMS Technology	91.251.102	1	/7.4
-SB2	Hlavice tlačítka zelená Head green button Head green button	ZB5AA3	TELEMECANIQUE	91.060.014	1	/6.8

The manufacturer reserves right to use an equivalent replacement device.

3

BOMAR, s.r.o. Těžební 1236/1 CZ 627 00, Brno	Stroj/Machine/Maschine: Proficut 275.230 DG	Název stránky/Name page/Name seiten: Kusovník artiklů / Parts list / Artikelstückliste	Číslo dok./Doc.No/Anzahl der Dokumente.: ES-101.193-B1/B2-V2.0 Napájení/Power supply/Einspeisung: 3x400V+N+PE, 50Hz Zpracoval/Processed /Hat verarbeitet: Datum/Date/Datum: 13.12.2021	List/Page/Seite: 3.a Listů/Pages/Seiten: 9

Kusovník artiklů / Parts list / Stückliste

Označení přístroje Device identification Geräteidentifikation	Typ přístroje Device description Gerätebeschreibung	Objednací číslo Type number Typennummer	Výrobce Manufacturer Hersteller	Skladové číslo Part number Lagernummer	Množství Quantity Menge	Umístění Location Stelle
-LP1	LED lampa LED lamp LED-Lampe	FL-T-24-1X3W	WIDECO	91.100.115	1	/7.7

The manufacturer reserves right to use an equivalent replacement device.

3.a

BOMAR, s.r.o. Těžební 1236/1 CZ 627 00, Brno	Stroj/Machine/Maschine: Proficut 275.230 DG	Název stránky/Name page/Name seiten: Kusovník artiklů / Parts list / Artikelstückliste	Číslo dok./Doc.No/Anzahl der Dokumente.:	ES-101.193-B1/B2-V2.0	List/Page/Seite: 3.b
			Napájení/Power supply/Einspeinsung:	3x400V+N+PE, 50Hz	
			Zpracoval/Processed /Hat verarbeitet:		Listů/Pages/Seiten: 9
			Datum/Date/Datum:	13.12.2021	

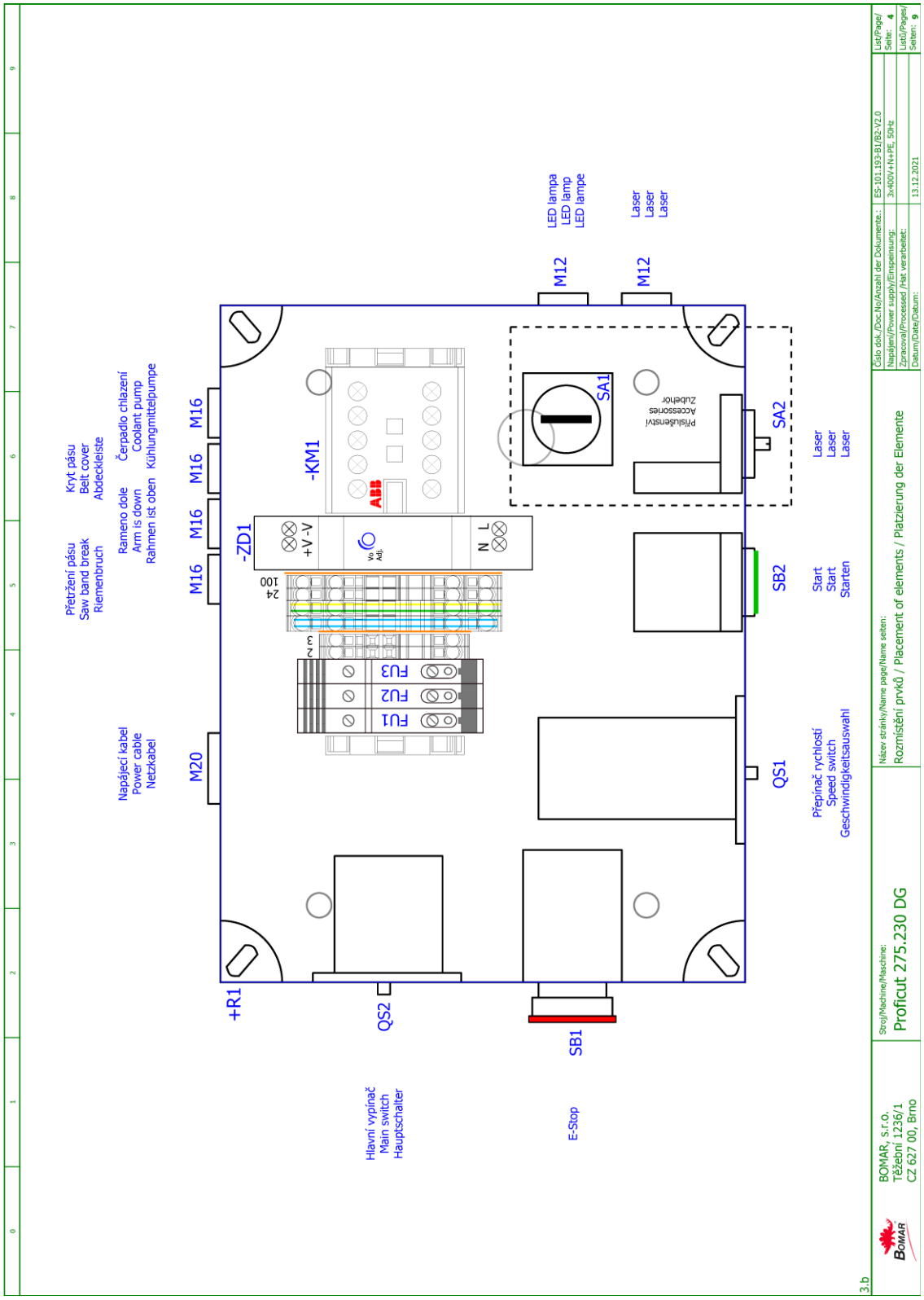
Přetržení pásu
Saw band break
Riemenbruch
Kryt pásu
Belt cover
Abdeckleiste
Rameno dole
Arm is down
Rahmen ist oben
Čerpadlo chlazení
Coolant pump
Kühlungmittelpumpe
Napájecí kabel
Power cable
Netzkabel
M20
M16
M16
M16
M16
+R1
QS2
Hlavní vypínač
Main switch
Hauptschalter
SB1
E-Stop
-ZD1
24
100
+V -V
N L
-KM1
ABB
FU1
FU2
FU3
M12
M12
LED lampa
LED lamp
LED lampe
Laser
Laser
Laser
SA1
Příslušenství
Accessories
Zubehör
SA2
Laser
Laser
Laser
SB2
Start
Start
Starten
QS1
Přepínač rychlostí
Speed switch
Geschwindigkeitsauswahl
3.b
BOMAR, s.r.o.
Těžební 1236/1
CZ 627 00, Brno
Stroj/Machine/Maschine:
Proficut 275.230 DG
Název stránky/Name page/Name seiten:
Rozmístění prvků / Placement of elements / Platzierung der Elemente
Číslo dok./Doc.No/Anzahl der Dokumente:
ES-101.193-B1/B2-V2.0
Napájení/Power supply/Einspeisung:
3x400V+N+PE, 50Hz
Zpracoval/Processed /hat verarbeitet:
Datum/Date/Datum:
13.12.2021
List/Page/
Seite: 4
List/Pages/
Seiten: 9

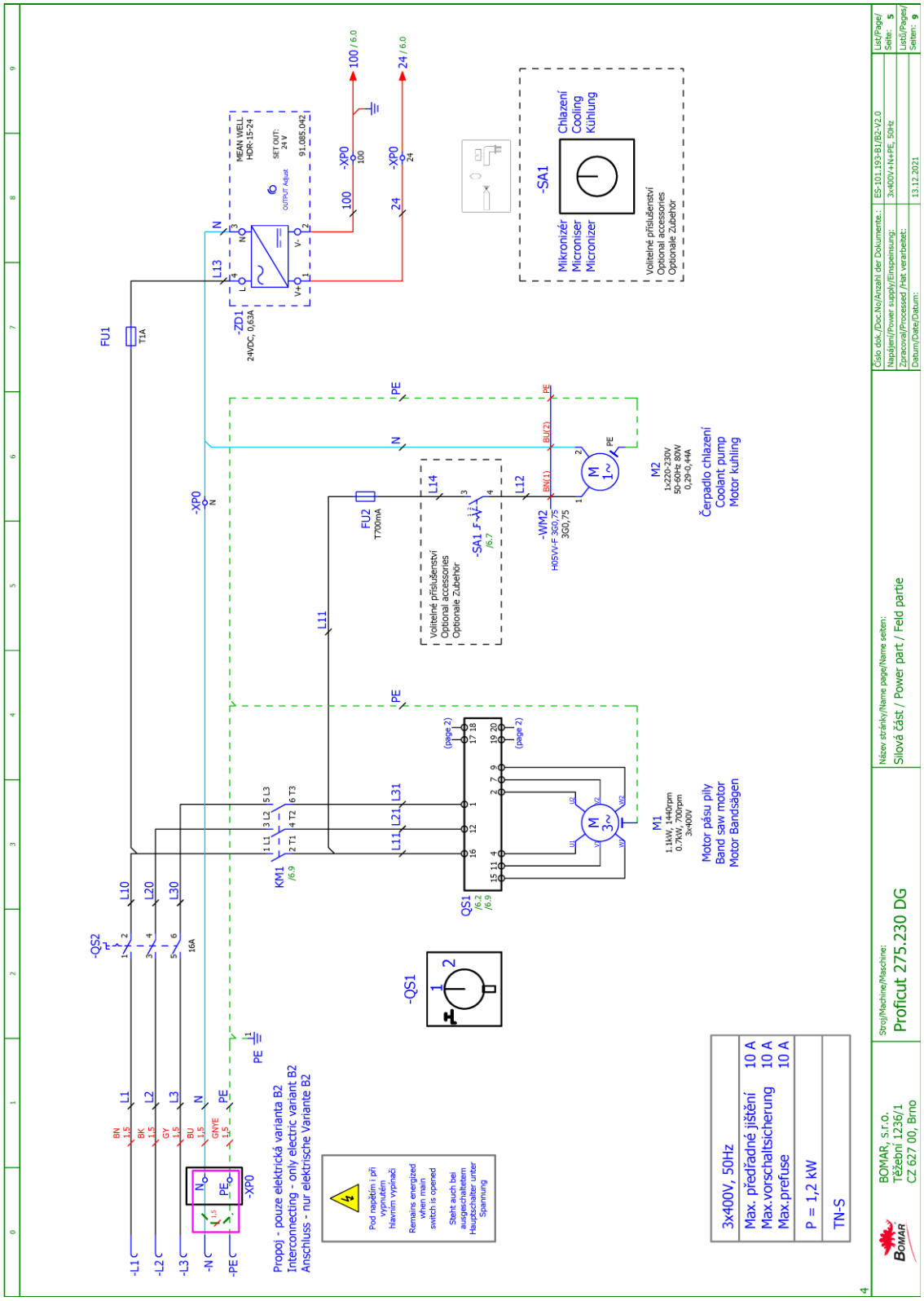
Propoj - pouze elektrická varianta B2
Interconnecting - only electric variant B2
Anschluss - nur elektrische Variante B2
Pod napětím i při vypnutém Hlavním vypínači
Remains energized when main switch is opened
Steht auch bei ausgeschaltetem Hauptschalter unter Spannung
3x400V, 50Hz
Max. předřadné jištění 10 A
Max.vorschaltsicherung 10 A
Max.prefuse 10 A
P = 1,2 kW
TN-S
Motor pásu pily
Band saw motor
Motor Bandsägen
Čerpadlo chlazení
Coolant pump
Motor kühling
Chlazení
Cooling
Kühlung
Mikronizér
Microniser
Micronizer
Volitelné příslušenství
Optional accessories
Optionale Zubehör
BOMAR, s.r.o.
Těžební 1236/1
CZ 627 00, Brno
Stroj/Machine/Maschine:
Proficut 275.230 DG
Název stránky/Name page/Name seiten:
Silová část / Power part / Feld partie
Číslo dok./Doc.No/Anzahl der Dokumente:
ES-101.193-B1/B2-V2.0
Napájení/Power supply/Einspeisung:
3x400V+N+PE, 50Hz
Zpracoval/Processed / Hat verarbeitet:
Datum/Date/Datum:
13.12.2021
List/Page/Seite: 5
Listů/Pages/Seiten: 9

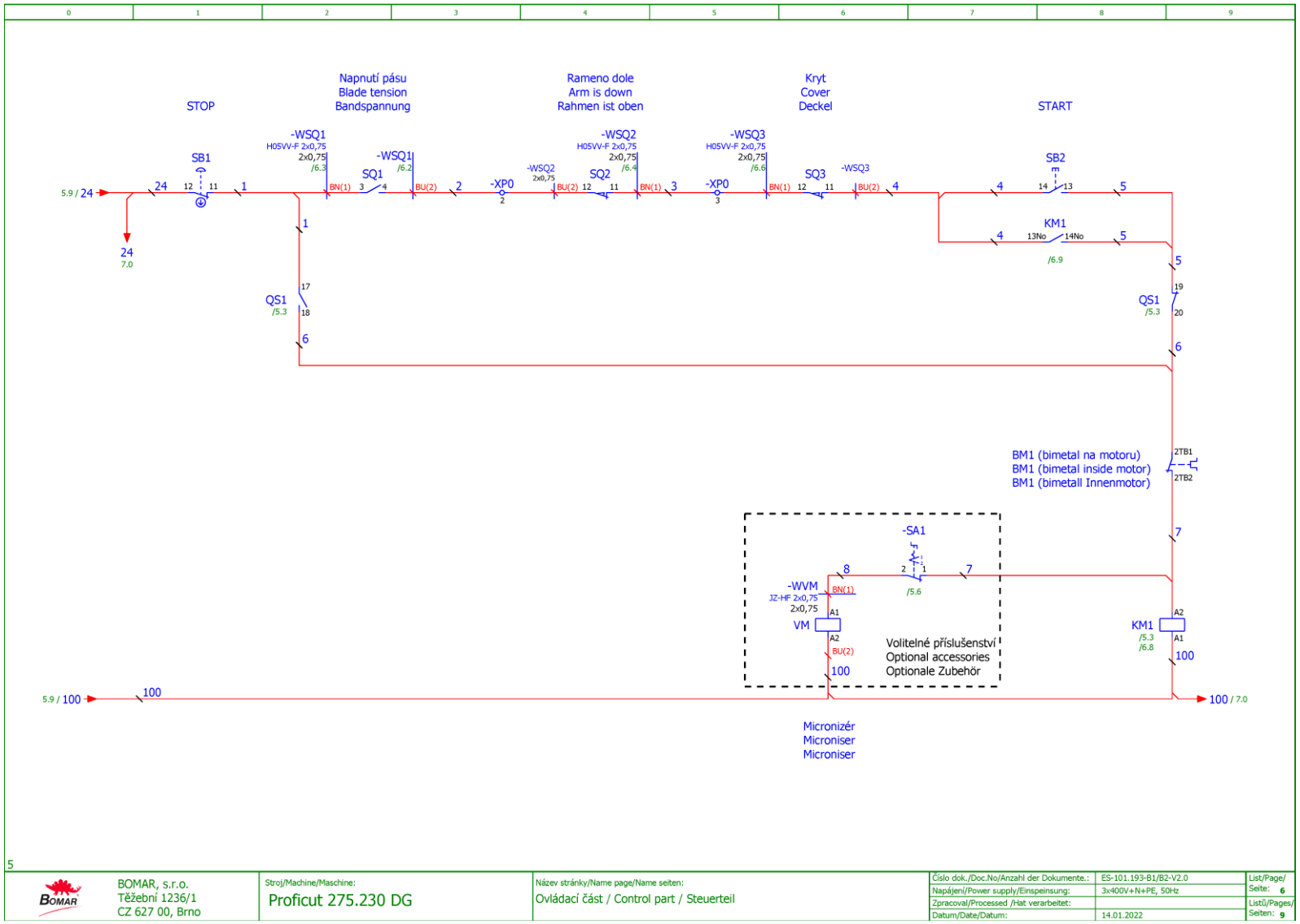
STOP
Napnutí pásu
Blade tension
Bandspannung
Rameno dole
Arm is down
Rahmen ist oben
Kryt
Cover
Deckel
START
SB1
-WSQ1
H05VV-F 2x0,75
2x0,75
/6.3
SQ1
-WSQ1
/6.2
-XP0
-WSQ2
2x0,75
SQ2
-WSQ2
H05VV-F 2x0,75
2x0,75
/6.4
-XP0
-WSQ3
H05VV-F 2x0,75
2x0,75
/6.6
SQ3
-WSQ3
SB2
KM1
13No
14No
/6.9
QS1
/5.3
QS1
/5.3
BM1 (bimetal na motoru)
BM1 (bimetal inside motor)
BM1 (bimetall Innenmotor)
2TB1
2TB2
-SA1
/5.6
-WVM
JZ-HF 2x0,75
2x0,75
VM
Volitelné příslušenství
Optional accessories
Optionale Zubehör
KM1
/5.3
/6.8
5.9 / 24
24
7.0
5.9 / 100
100
100 / 7.0
Micronizér
Microniser
Microniser
5
BOMAR, s.r.o.
Těžební 1236/1
CZ 627 00, Brno
Stroj/Machine/Maschine:
Proficut 275.230 DG
Název stránky/Name page/Name seiten:
Ovládací část / Control part / Steuerteil
Číslo dok./Doc.No/Anzahl der Dokumente.:
ES-101.193-B1/B2-V2.0
Napájení/Power supply/Einspeisung:
3x400V+N+PE, 50Hz
Zpracoval/Processed /Hat verarbeitet:
Datum/Date/Datum:
14.01.2022
List/Page/
Seite: 6
Listů/Pages/
Seiten: 9

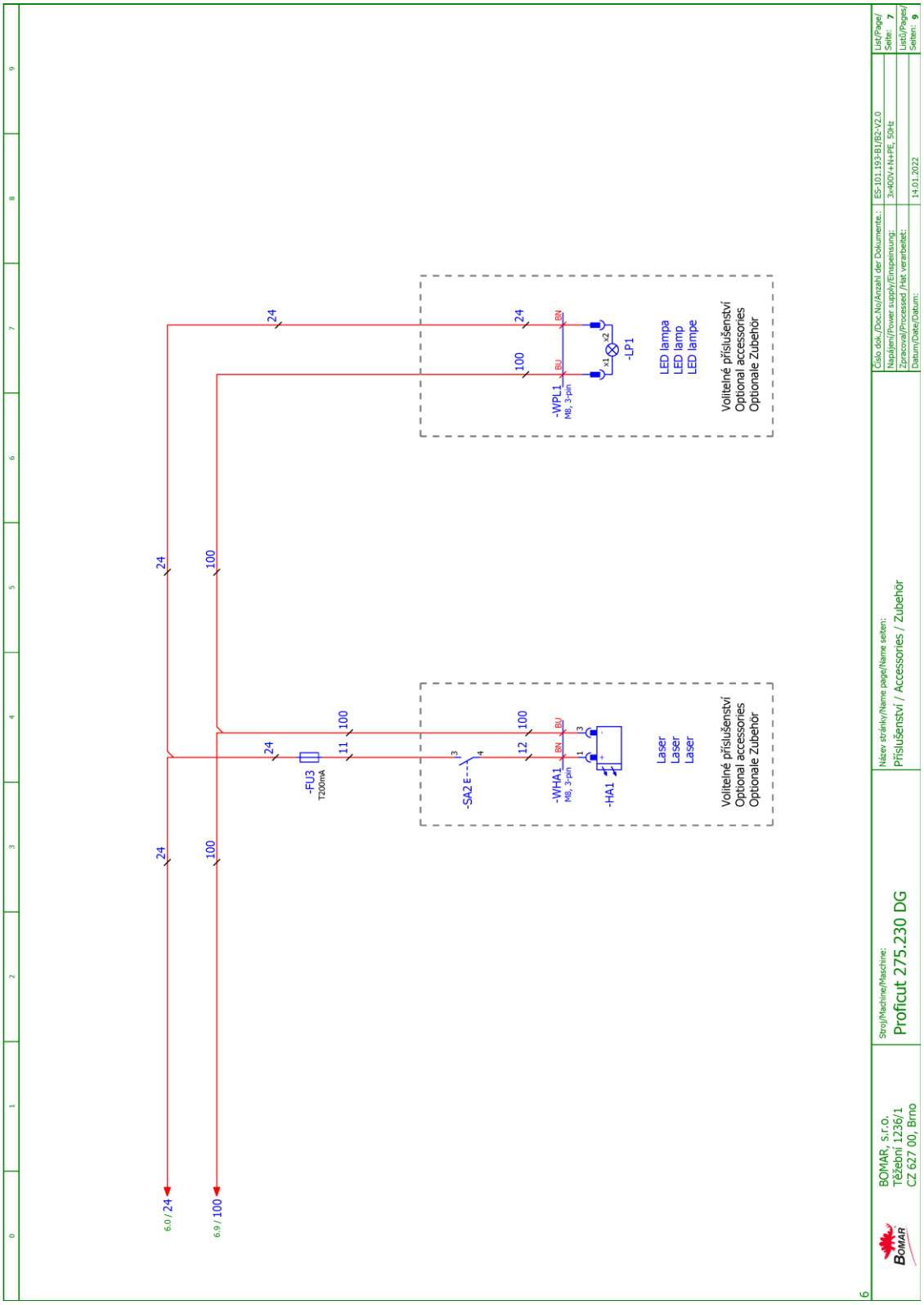
6.0 / 24
6.9 / 100
24
100
-FU3
T200mA
-SA2 E
-WHA1
M8, 3-pin
-HA1
Laser
Laser
Laser
Volitelné příslušenství
Optional accessories
Optionale Zubehör
-WPL1
M8, 3-pin
-LP1
LED lampa
LED lamp
LED lampe
BOMAR, s.r.o.
Těžební 1236/1
CZ 627 00, Brno
Stroj/Machine/Maschine:
Proficut 275.230 DG
Název stránky/Name page/Name seiten:
Příslušenství / Accessories / Zubehör
Číslo dok./Doc.No/Anzahl der Dokumente:
ES-101.193-B1/B2-V2.0
Napájení/Power supply/Einspeisung:
3x400V+N+PE, 50Hz
Zpracoval/Processed /hat verarbeitet:
Datum/Date/Datum:
14.01.2022
List/Page/
Seite: 7
List/Pages/
Seiten: 9

6.1.2. 3x230V+PE, 50/60 Hz

Obsah / Table of contents / Inhalt

Strana Page Seite	Název strany Page name Seitenname	Datum Date Datum
/1	Úvodní strana/Start page/Startseite	28.05.2021
/2	Obsah / Content / Inhalt	26.06.2021
/3	Kusovník artiklů / Parts list / Artikelstückliste	16.06.2021
/3.a	Kusovník artiklů / Parts list / Artikelstückliste	16.06.2021
/3.b	Kusovník artiklů / Parts list / Artikelstückliste	07.06.2021
/4	Rozmístění prvků / Placement of elements / Platzierung der Elemente	16.06.2021
/5	Silová část / Power part / Feld partie	26.06.2021
/6	Ovládací část / Control part / Steuerteil	26.06.2021
/7	Příslušenství / Accessories / Zubehör	16.06.2021

Kusovník artiklů / Parts list / Stückliste

Označení přístroje Device identification Geräteidentifikation	Typ přístroje Device description Gerätebeschreibung	Objednací číslo Type number Typennummer	Výrobce Manufacturer Hersteller	Skladové číslo Part number Lagernummer	Množství Quantity Menge	Umístění Location Stelle
-+R1	Rozváděčová krabice Switchboard box Schaltschrank	30.BC2330-042	Bomar	30.BC2330-042	1	/4.2
-+R1	Distanční podložka Spacer Abstandhalter	30.BC2330-043	Bomar	30.BC2330-043	1	/4.2
-TR1	Držák toroidního trafa Toroidal transformer holder Halter für Transformator Toroid	30.BC2330-013	BOMAR s.r.o.	30.BC2330-013	1	/7.2
-HA1	Laser Laser Laser	Laser 24AC/DC	HOFMAN SYSTEMS s.r.o.	91.100.109	1	/7.4
-SA1	Přepínač - dvě polohy Switch 2 positions Schalter 2 Positionen	ZB5-AD2	Harmony	91.060.025	1	/5.5
-FA1	Tepelné relé - 5.7A Thermal relay - 5.7A Thermische relais - 5.7A	T16-5,7	ABB	91.050.033	1	/5.2
-FU5	Pojistka trubičková - 200mA/250V, pomalá, 5x20 Tube fuse - 200mA/250V, slow, 5x20 Rohrsicherung - 160mA / 250V, langsam, 5x20	T200mA/250V	ESKA	91.230.037	1	/7.4
-FU6	Pojistka trubičková - 200mA/250V, pomalá, 5x20 Tube fuse - 200mA/250V, slow, 5x20 Rohrsicherung - 160mA / 250V, langsam, 5x20	T200mA/250V	ESKA	91.230.037	1	/7.7
-KM1	Ministykač - 4kW/400V, 3P Mini contactor - 4kW/400V, 3P Mini-Schütze - 4 kW / 400V, 3P	B6-30-10-80	ABB	91.040.045	2	/5.2;/6.9
-QS2	3 pólový odpínač, 16A Disconnector - 3P, 16A Trennschalter - 3P, 16A	OT16FT3	ABB	91.170.018	1	/5.2
-QS2	Kryt svorek Terminal shroud Klemmenabdeckung	OTS40T3	ABB	91.170.017	1	/5.2
-QS2	Rukojeť odpínače - černá Handle switch - black Griffschalter - schwarz	OHBS3RH	ABB	91.180.016	1	/5.2

The manufacturer reserves right to use an equivalent replacement device.

2

Kusovník artiklů / Parts list / Stückliste

Označení přístroje Device identification Geräteidentifikation	Typ přístroje Device description Gerätebeschreibung	Objednací číslo Type number Typennummer	Výrobce Manufacturer Hersteller	Skladové číslo Part number Lagernummer	Množství Quantity Menge	Umístění Location Stelle
-SB1	Total stop - hlavice + 2xNC Emergency-stop - button + 2xNC Not-Aus-Pilz - Taster + 2xNC	YW1B-V4E02R	IDEC	91.060.084	1	/6.1
-TR1	Toroidní transformátor - 400V/230V/24V 20VA Toroidal transformer - 400V / 230V / 24V 20VA Ringkerntransformator - 400V / 230V / 24V 20VA	400V/230V/24V 0,8A 20VA	KARBAN s.r.o.	91.080.035	1	/7.2
-SQ3	Bezpečnostní koncový spínač - 2xNC Safety Limit Switch - 2x NC Sicherheitsendschalter - 2x NC	QKS8	KEDU	91.173.012	1	/6.6
-SQ1	Koncový spínač - 1NC+1NO Limit switch - 1NC+1NO Endschalter - 1NC+1NO	D4N-4A31	OMRON	91.173.007	1	/6.2
-SQ2	Koncový spínač - 1NC+1NO Limit switch - 1NC+1NO Endschalter - 1NC+1NO	D4N-4A31	OMRON	91.173.007	1	/6.4
-M1	Dvourychlostní asynchronní motor 0,7/1,1kW; 3x400V Two speed asynchronous motor 0,7/1,1kW; 3x400V Zwei Geschwindigkeit Asynchronmotor 0,7/1,1kW; 3x400V	MSD 90L- 8/4 B14-FT115 230+bimetal	OPIS Engineering k.s.	91.001.381	1	/5.2
-QS1	Spínač vačkový - 3 polohy Switch cam - 3 positions Schaltnocken - 3 positionen	S10-60169	SALZER	91.171.013	1	/5.2
-M2	Čerpadlo chlazení 80W Cooling pump 80W Kühlpumpe 80W	PA70-M	SAP srl	91.020.035	1	/5.5
-FU5	Svorka pojistková Fuse terminal Sicherungsklemme	SKJ - 2.5D	SMS Technology	91.251.102	1	/7.4
-FU6	Svorka pojistková Fuse terminal Sicherungsklemme	SKJ - 2.5D	SMS Technology	91.251.102	1	/7.7
-PA1	Pojistka válcová - 1A, 10x38, CC Tube fuse - 1A, 10x38, CC Rohrsicherung - 1A, 10x38, CC	PRO-FER-ATDR1	Mersen	91.230.078	2	/5.6
-PA1	Pojistkový odpojovač - 2P CC Fuse disconnector - 2P CC Sicherungstrenner - 2P CC	PRO-FER-USCC2	Mersen	91.241.021	1	/5.6

The manufacturer reserves right to use an equivalent replacement device.

3

BOMAR, s.r.o. Těžební 1236/1 CZ 627 00, Brno	Stroj/Machine/Maschine: Proficut 275.230 DG	Název stránky/Name page/Name seiten: Kusovník artiklů / Parts list / Artikelstückliste	Číslo dok./Doc.No/Anzahl der Dokumente.: ES-101.193-T3-V1.2 Napájení/Power supply/Einspeinsung: 3x230V+PE, 50/60Hz Zpracoval/Processed /Hat verarbeitet: Datum/Date/Datum: 16.06.2021	List/Page/Seite: 3.a Listů/Pages/Seiten: 9

Kusovník artiklů / Parts list / Stückliste

Označení přístroje Device identification Geräteidentifikation	Typ přístroje Device description Gerätebeschreibung	Objednací číslo Type number Typennummer	Výrobce Manufacturer Hersteller	Skladové číslo Part number Lagernummer	Množství Quantity Menge	Umístění Location Stelle
-PA2	Pojistka válcová - 0,5A, 10x38, CC Tube fuse - 0,5A, 10x38, CC Rohrsicherung - 0,5A, 10x38, CC	PRO-FER-ATDR1/2	Mersen	91.230.077	2	/5.5
-PA2	Pojistkový odpojovač - 2P CC Fuse disconnector - 2P CC Sicherungstrenner - 2P CC	PRO-FER-USCC2	Mersen	91.241.021	1	/5.5
-SB2	Hlavice tlačítka zelená Head green button Head green button	ZB5AA3	TELEMECANIQUE	91.060.014	1	/6.8
-LP1	LED lampa LED lamp LED-Lampe	FL-T-24-1X3W	WIDECO	91.100.115	1	/7.7

The manufacturer reserves right to use an equivalent replacement device.

3.a

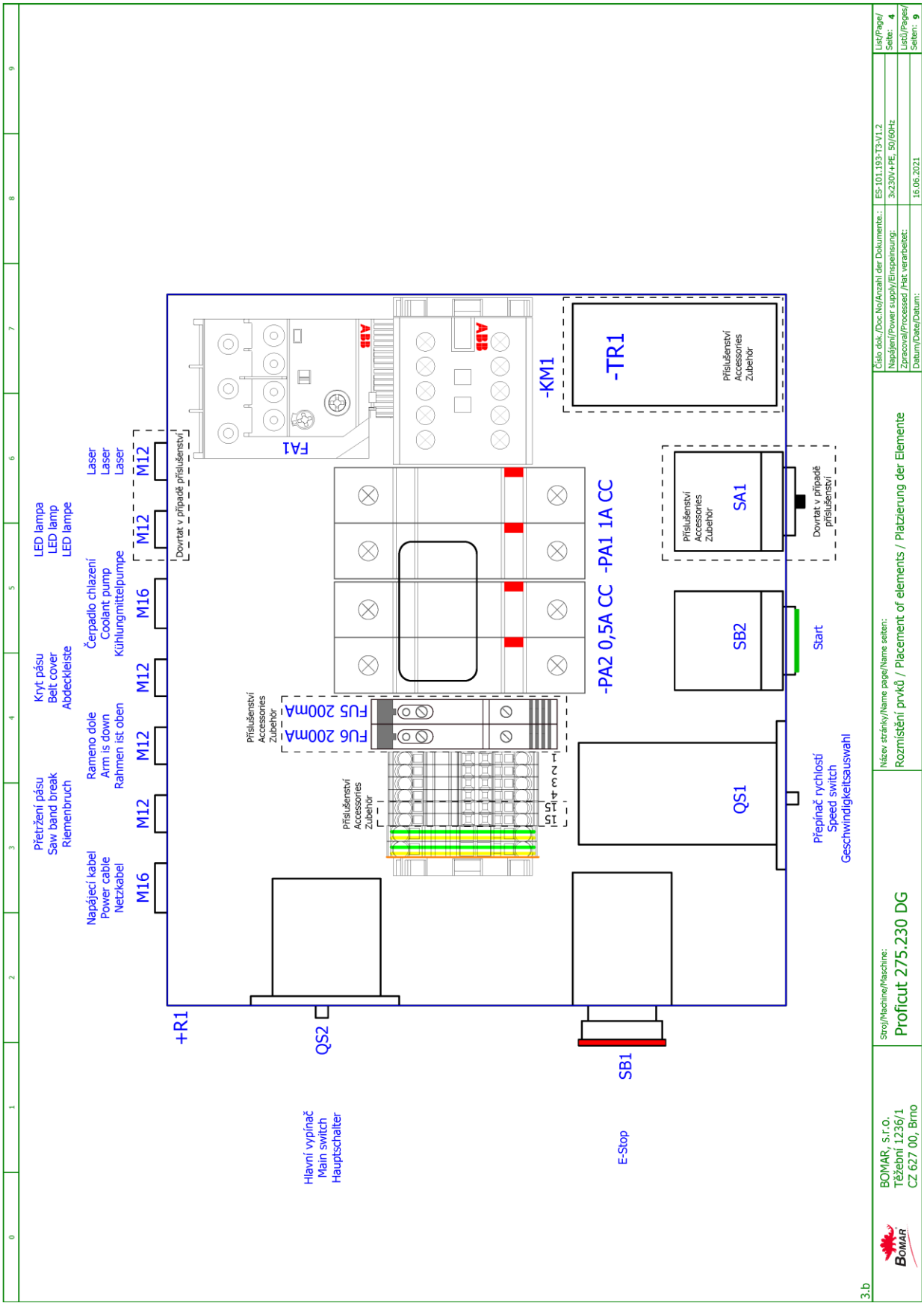
+R1
QS2
SB1
Hlavní vypínač
Main switch
Hauptschalter
E-Stop
Napájecí kabel
Power cable
Netzkabel
M16
Přetržení pásu
Saw band break
Riemenbruch
M12
Rameno dole
Arm is down
Rahmen ist oben
M12
Kryt pásu
Belt cover
Abdeckleiste
M12
Čerpadlo chlazení
Coolant pump
Kühlungmittelpumpe
M16
LED lampa
LED lamp
LED lampe
M12
Laser
Laser
Laser
M12
Dovrtat v případě příslušenství
FA1
ABB
ABB
-KM1
-TR1
Příslušenství
Accessories
Zubehör
-PA2 0,5A CC -PA1 1A CC
Příslušenství
Accessories
Zubehör
FU5 200mA
FU6 200mA
Příslušenství
Accessories
Zubehör
1
2
3
4
15
15
Příslušenství
Accessories
Zubehör
SA1
Dovrtat v případě příslušenství
SB2
Start
QS1
Přepínač rychlosti
Speed switch
Geschwindigkeitsauswahl
3.b
BOMAR, s.r.o.
Těžební 1236/1
CZ 627 00, Brno
Stroj/Machine/Maschine:
Proficut 275.230 DG
Název stránky/Name page/Name seiten:
Rozmístění prvků / Placement of elements / Platzierung der Elemente
Číslo dok./Doc.No/Anzahl der Dokumente.:
ES-101.193-T3-V1.2
Napájení/Power supply/Einspeisung:
3x230V+PE, 50/60Hz
Zpracoval/Processed /Hat verarbeitet:
Datum/Date/Datum:
16.06.2021
List/Page/
Seite: 4
Listů/Pages/
Seiten: 9

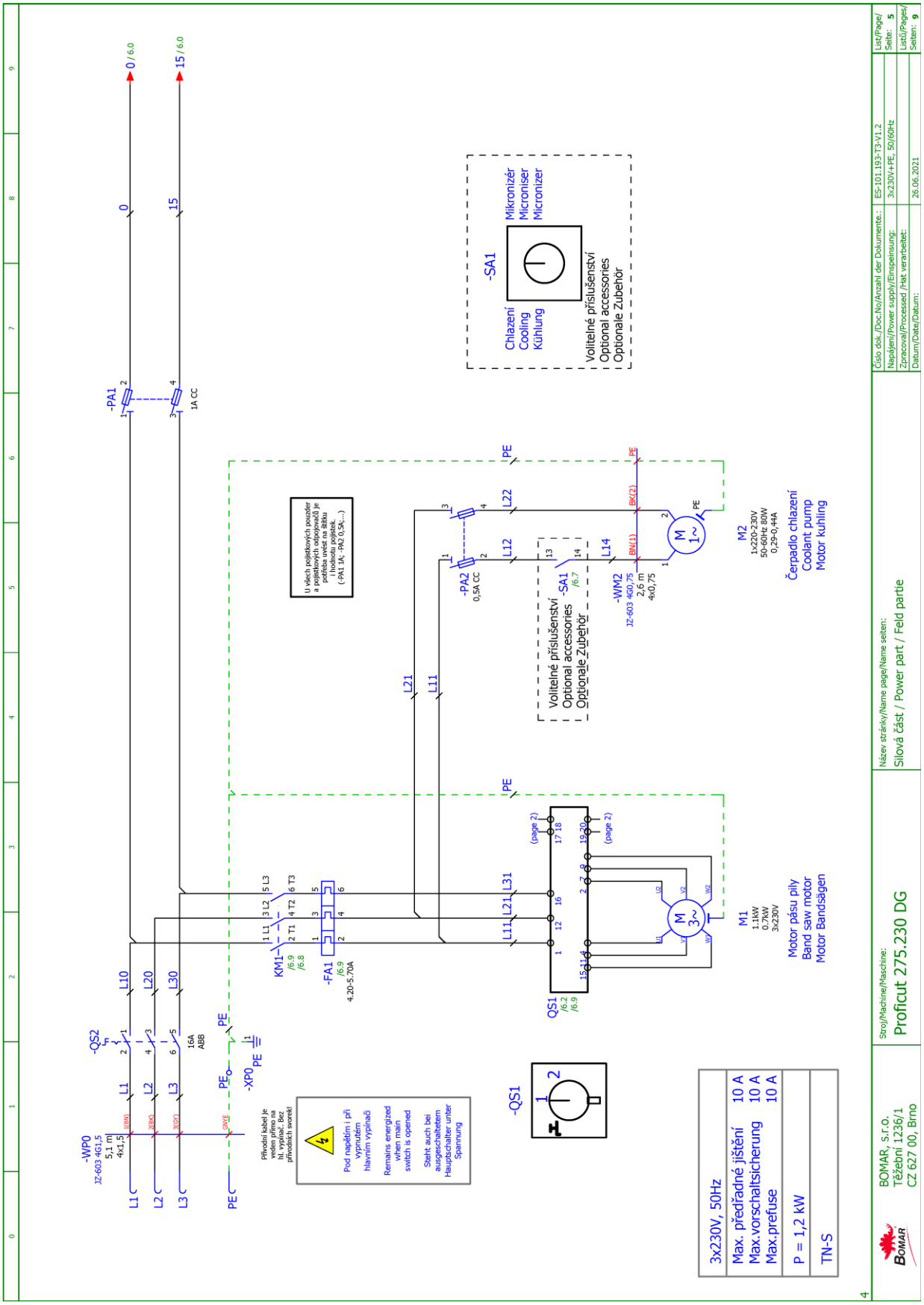
-WP0
JZ-603 4G1,5
5,1 m
4x1,5
L1
L2
L3
PE
-QS2
L10
L20
L30
16A
ABB
-XP0
Přívodní kabel je veden přímo na JL vypínač. Bez přívodních svorek!
Pod napětím i při vypnutém hlavním vypínači
Remains energized when main switch is opened
Steht auch bei ausgeschaltetem Hauptschalter unter Spannung
-QS1
KM1
/6.9
/6.8
-FA1
/6.9
4,20-5,70A
QS1
/6.2
/6.9
(page 2)
M
3~
M1
1,1kW
0,7kW
3x230V
Motor pásu pily
Band saw motor
Motor Bandsägen
-PA1
1A CC
0 / 6.0
15 / 6.0
U všech pojistkových pouzder a pojistkových odpojovačů je potřebu uvést na štítku jaký typ vložky. (-PA1 1A, -PA2 0,5A...)
-PA2
0,5A CC
L21
L11
L22
L12
L14
-SA1
/6.7
Volitelné příslušenství
Optional accessories
Optionale Zubehör
-WM2
JZ-603 4G0,75
2,6 m
4x0,75
BK(2)
BN(1)
M
1~
M2
1x220-230V
50-60Hz 80W
0,29-0,44A
Čerpadlo chlazení
Coolant pump
Motor kühling
-SA1
Mikronizér
Micronisér
Micronizer
Chlazení
Cooling
Kühlung
3x230V, 50Hz
Max. předřadné jištění 10 A
Max.vorschaltsicherung 10 A
Max.prefuse 10 A
P = 1,2 kW
TN-S
BOMAR, s.r.o.
Těžební 1236/1
CZ 627 00, Brno
Stroj/Machine/Maschine:
Proficut 275.230 DG
Název stránky/Name page/Name seiten:
Silová část / Power part / Feld partie
Číslo dok./Doc.No/Anzahl der Dokumente.:
ES-101.193-T3-V1.2
Napájení/Power supply/Einspeisung:
3x230V+PE, 50/60Hz
Zpracoval/Processed /Hat verarbeitet:
Datum/Date/Datum:
26.06.2021
List/Page/
Seite: 5
Listů/Pages/
Seiten: 9

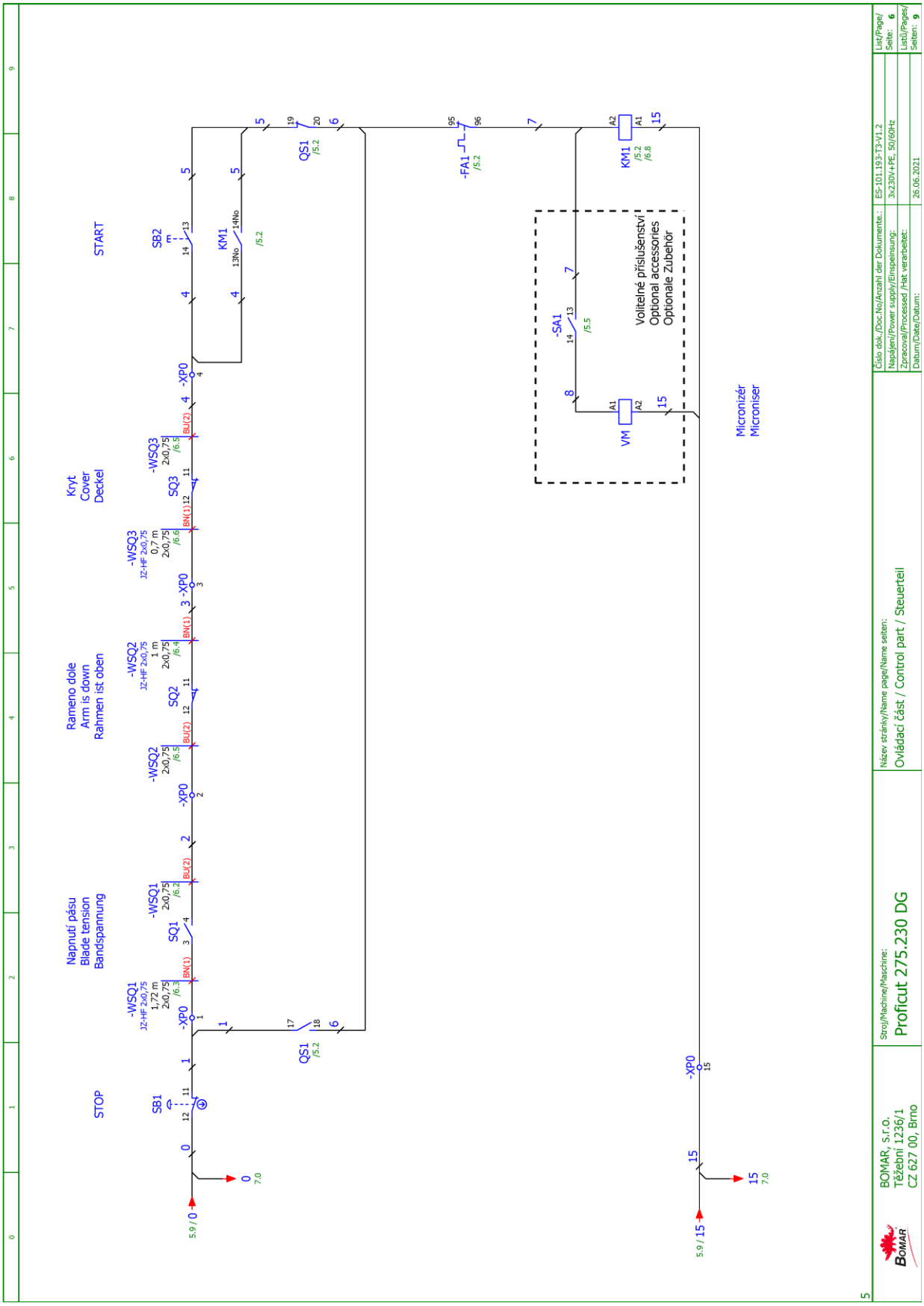
STOP
SB1
-XP0
-WSQ1
JZ-HF 2x0,75
1,72 m
2x0,75
/6.3
Napnutí pásu
Blade tension
Bandspannung
SQ1
-WSQ1
2x0,75
/6.2
Rameno dole
Arm is down
Rahmen ist oben
-XP0
-WSQ2
2x0,75
/6.5
SQ2
-WSQ2
JZ-HF 2x0,75
1 m
2x0,75
/6.4
-XP0
-WSQ3
JZ-HF 2x0,75
0,7 m
2x0,75
/6.6
Kryt
Cover
Deckel
SQ3
-WSQ3
2x0,75
/6.5
-XP0
START
SB2
KM1
13No
14No
/5.2
QS1
/5.2
-FA1
/5.2
-SA1
/5.5
VM
Volitelné příslušenství
Optional accessories
Optionale Zubehör
KM1
/5.2
/6.8
Micronizér
Microniser
-XP0
5.9 / 0
0
7.0
5.9 / 15
15
7.0
BOMAR, s.r.o.
Těžební 1236/1
CZ 627 00, Brno
Stroj/Machine/Maschine:
Proficut 275.230 DG
Název stránky/Name page/Name seiten:
Ovládací část / Control part / Steuerteil
Číslo dok./Doc.No/Anzahl der Dokumente.:
ES-101.193-T3-V1.2
Napájení/Power supply/Einspeisung:
3x230V+PE, 50/60Hz
Zpracoval/Processed /Hat verarbeitet:
Datum/Date/Datum:
26.06.2021
List/Page/
Seite: 6
Listů/Pages/
Seiten: 9

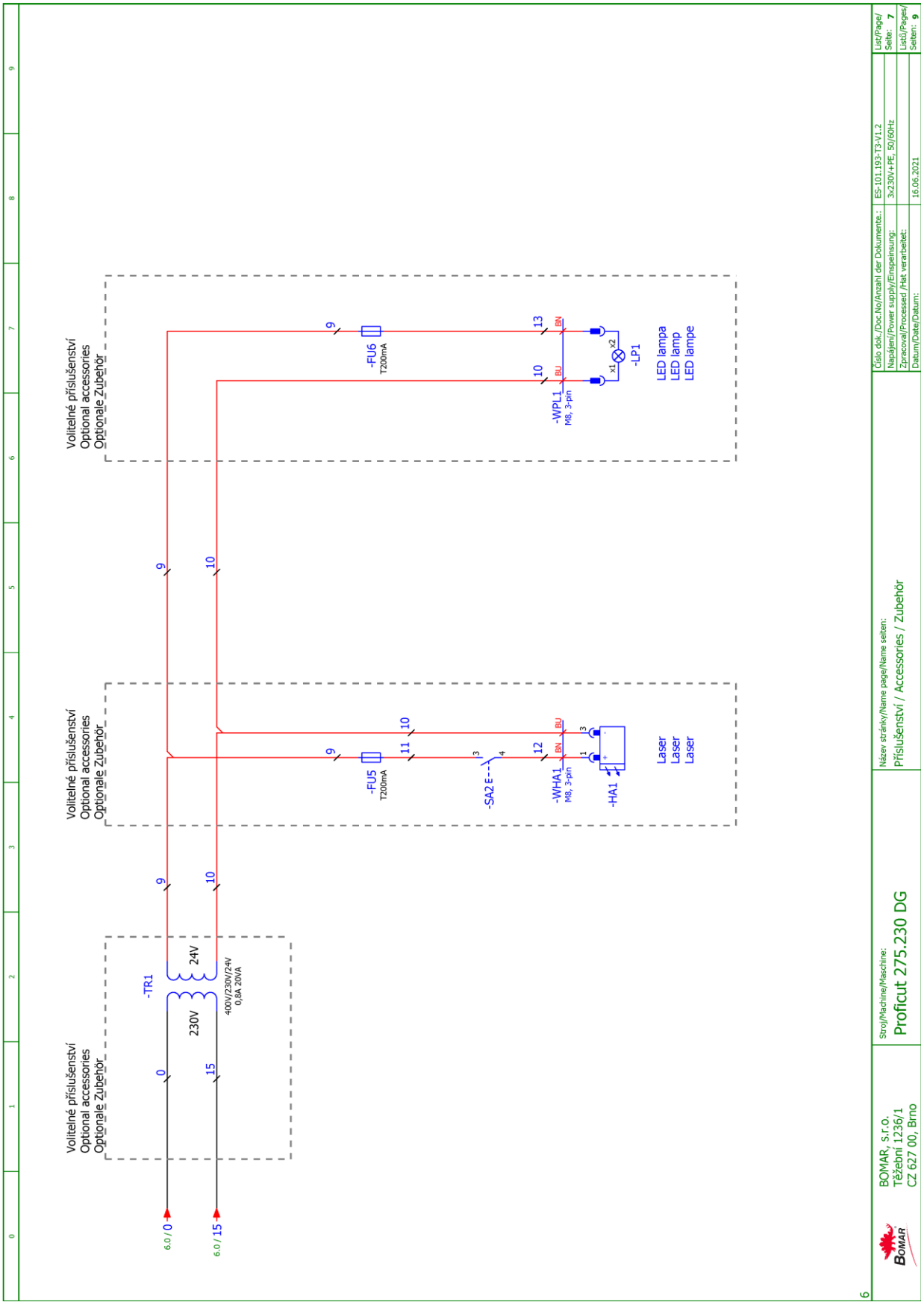
Volitelné příslušenství
Optional accessories
Optionale Zubehör
-TR1
400V/230V/24V
0,8A 230VA
230V
24V
6.0 / 0
6.0 / 15
-FU5
T200mA
-SA2 E
-WHA1
M8, 3-pin
-HA1
Laser
Laser
Laser
-FU6
T200mA
-WPL1
M8, 3-pin
-LP1
LED lampa
LED lamp
LED lampe
BOMAR, s.r.o.
Těžební 1236/1
CZ 627 00, Brno
Stroj/Machine/Maschine:
Proficut 275.230 DG
Název stránky/Name page/Name seiten:
Příslušenství / Accessories / Zubehör
Číslo dok./Doc.No/Anzahl der Dokumente.:
ES-101.193-T3-V1.2
Napájení/Power supply/Einspeisung:
3x230V+PE, 50/60Hz
Zpracoval/Processed /Hat verarbeitet:
Datum/Date/Datum:
16.06.2021
List/Page/
Seite: 7
Listů/Pages/
Seiten: 9

6.2. Hydraulické schéma / Hydraulikschema / Hydraulic diagram

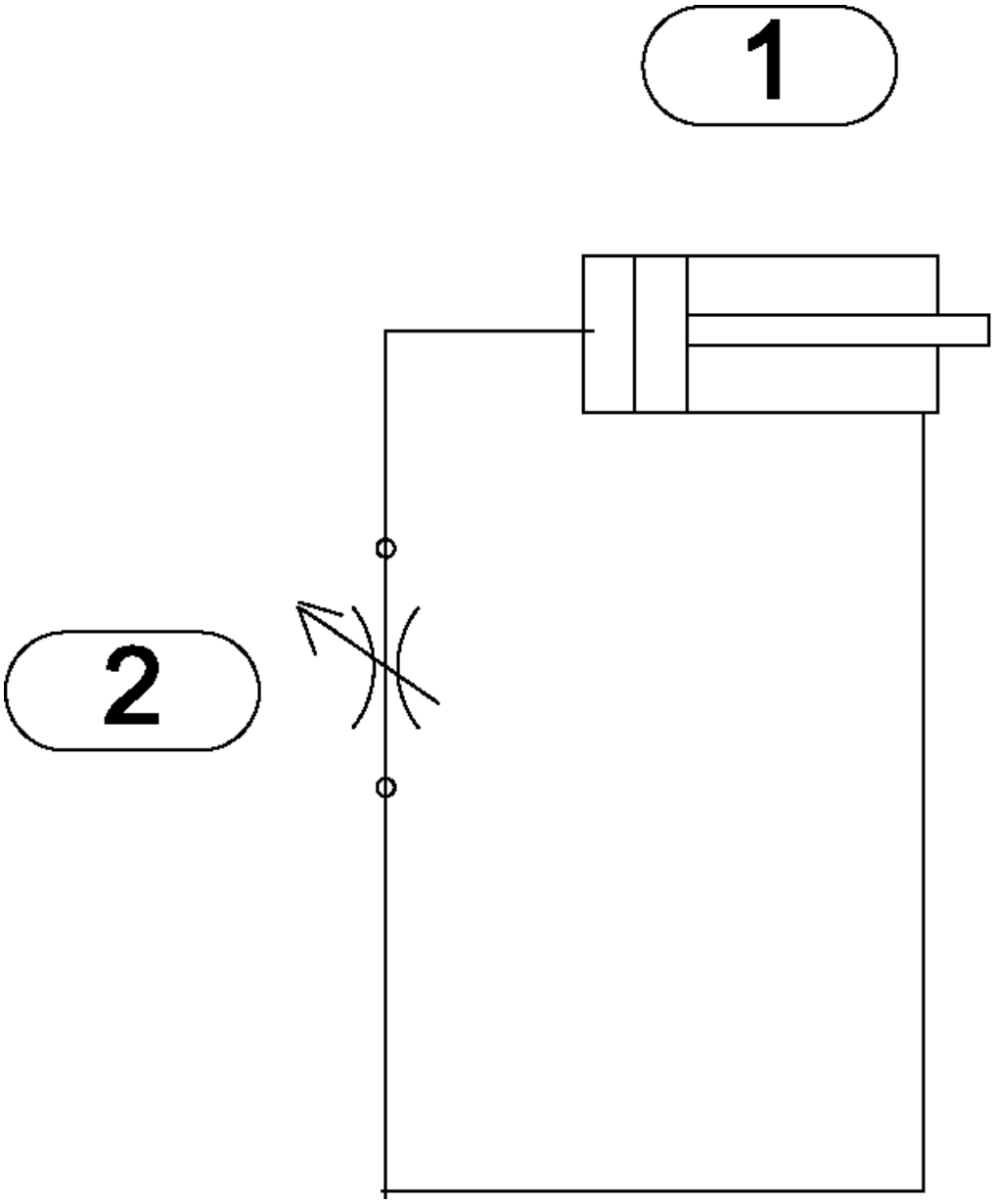

Poz.	Název položky		ks
Pos.	Bezeichnung		Menge
Pos.	Item		Pcs.
1	viz výkres náhradního dílu / see drawing of the spare part / Siehe Zeichnung des Ersatzteils	Hydraulický válec / Hydraulikzylinder / Hydraulic cylinder	1
2	ve válci / inside oft he cylinder / in einem Zylinder	Regulační ventil / Regelventil / Regulation valve	1

7. Výkresy sestav pro objednání náhradních dílů / Zeichnungen für Bestellung der Ersatzteile / Drawing assemblies for spare parts order

- Při objednávání náhradních dílů vždy uvádějte: typ stroje (např. ProfiCut 275.230 DG) , výrobní číslo (např. 125) a rok výroby (např. 1999).

- In die Bestellung der Ersatzteile führen Sie immer an: Maschinentyp (z. B. ProfiCut 275.230 DG), Serien Nr. (z. B. 125) und Baujahr (z. B. 1999).

- For spare parts order, you must always to allege: type of machine (for example ProfiCut 275.230 DG), serial number (for example 125) and year of construction (for example 1999).

7.1. ProfiCut 275.230 DG

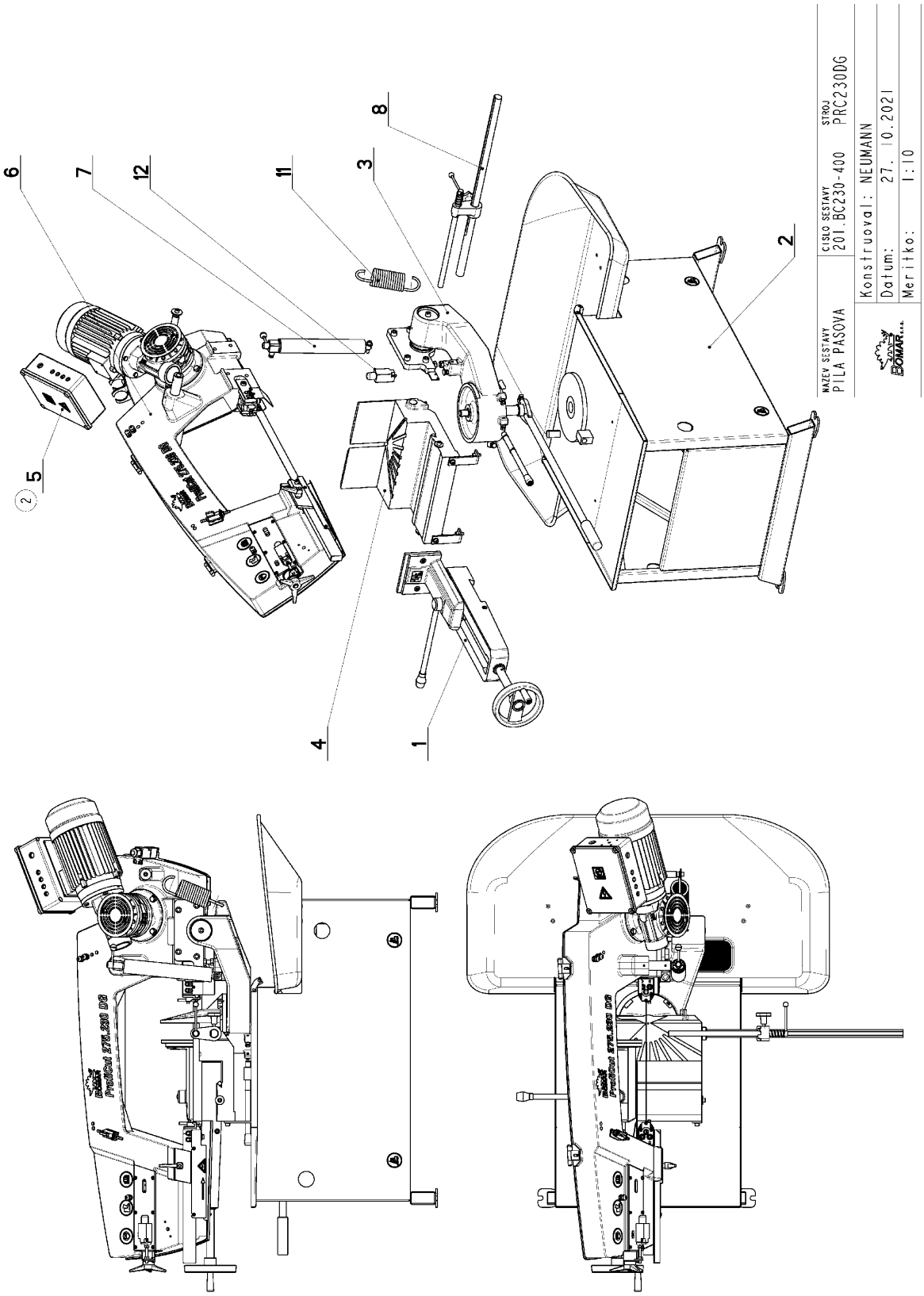

Cislo Sestavy	Ver.	Nazev sestavy
201.BC230-400	3	PILA PASOVA/BAND SAW/BANDSÄGE

Poz.	Objednaci cislo	Ver.	Nazev polozky	Rozmer	Ks
1	201.1003-200	3	SVERAK / VICE / SCHRAUBSTOCK		1
2	201.8001-500	5	PODSTAVEC / BASE / UNTERSATZ		1
3	201.8002-400	5	KONZOLA OTOCNA / TURNABLE CONSOL / DREHKONSOLE		1
4	201.8009-000	2	PODSTAVEC SVERAKU / VICE BASE / SCHRAUBSTOCKUNTERSATZ		1
5	201.BC2330-030 (2)	0	ROZVADEC ELEKTRO / ELECTRO DISTRIBUTOR / SCHALTSCHRANK		1
6	201.BC234-400	11	RAMENO / SHOULDER / SÄGERAHMEN		1
7	201.BC237-400	0	VALEC / ROLLER / ZYLINDER		1
8	221.8003-100	0	DORAZ / STOP PIECE / ANSCHLAG		1
9	30.BC299-401	0	STITEK / LABEL / SCHILD	P 0,5x65	1
10	31.0599-005	0	SAMOLEPKA / STICKER / AUFKLEBER		1
11	31.LM04-006	1	PRUZINA / SPRING / FEDER	7.1x50x194x14.25	1
12	91.173.007	0	SPINAC KONCOVY / END SWITCH / ENDSCHALTER	-RIWK	1
13	99.900.040	0	SAMOLEPKA / STICKER / AUFKLEBER		1
14	99.900.043	0	SAMOLEPKA / STICKER / AUFKLEBER		1
15	99.900.045	0	SAMOLEPKA / STICKER / AUFKLEBER		1
16	99.900.046	0	SAMOLEPKA / STICKER / AUFKLEBER		1
17	99.900.047	0	SAMOLEPKA / STICKER / AUFKLEBER		1
18	99.900.048	0	SAMOLEPKA / STICKER / AUFKLEBER		1
19	99.900.049	0	SAMOLEPKA / STICKER / AUFKLEBER		1
20	99.900.053	0	SAMOLEPKA / STICKER / AUFKLEBER		1
21	99.900.068	0	SAMOLEPKA / STICKER / AUFKLEBER	pouziti vysokozvizneno vozikku	4

1.ZRUSENA VANA 201.ER251-302 (VANA JE SOUCASTI PODSTAVCE 201.8001-500). 14.3.2019 SLEZACKOVA
2.PRIDAN ROZVADEC ELEKTRO 201.2330-030. 318/ZM447 1.11.2019 KOSYK
3.ZRUS.SAMOLEPKA 31.0508-005 A CERTIFIKACNI SAMOLEPKA 99.901.032. 029/ZM096 11.3.2021 SLEZACKOVA

Cislo Sestavy/Number of assembly/Nummer der Baugruppe; Verze (Ver.)/Version/Version; Nazev sestavy/Assembly title/Name der Baugruppe; Pozice (Poz.)/Position/Position;
Objednaci cislo/Purchase order number/Bestellnummer; Nazev polozky/Volume title/Name der Position; Rozmer/Stock size/Abmessung

7.3. ProfiCut 275.230 DG

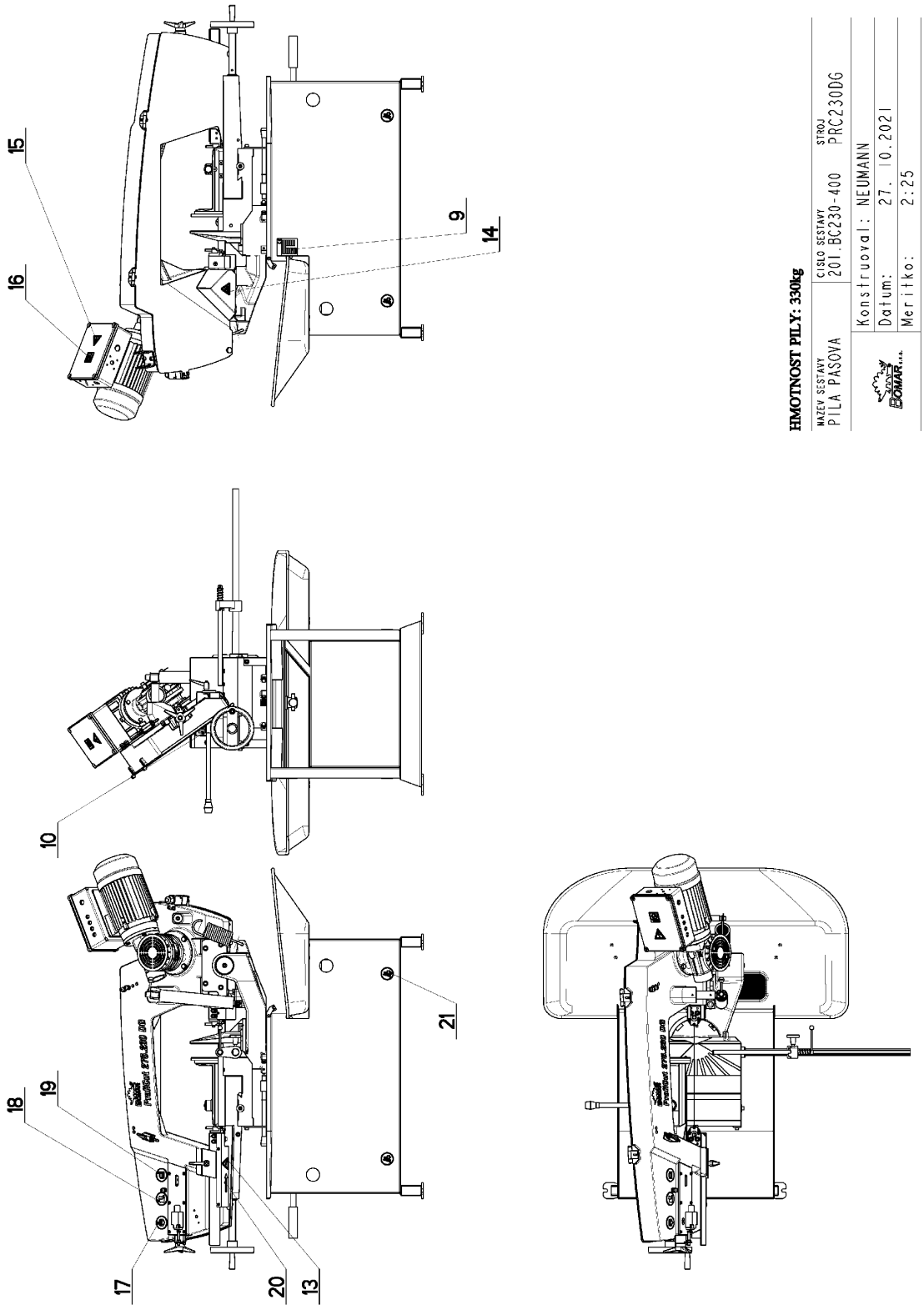

Cislo Sestavy	Ver.	Nazev sestavy
201.BC230-400	3	PILA PASOVA/BAND SAW/BANDSÄGE

Poz.	Objednaci cislo	Ver.	Nazev polozky	Rozmer	Ks
1	201.1003-200	3	SVERAK / VICE / SCHRAUBSTOCK		1
2	201.8001-500	5	PODSTAVEC / BASE / UNTERSATZ		1
3	201.8002-400	5	KONZOLA OTOCNA / TURNABLE CONSOL / DREHKONSOLE		1
4	201.8009-000	2	PODSTAVEC SVERAKU / VICE BASE / SCHRAUBSTOCKUNTERSATZ		1
5	201.BC2330-030 (2)	0	ROZVADEC ELEKTRO / ELECTRO DISTRIBUTOR / SCHALTSCHRANK		1
6	201.BC234-400	11	RAMENO / SHOULDER / SÄGERAHMEN		1
7	201.BC237-400	0	VALEC / ROLLER / ZYLINDER		1
8	221.8003-100	0	DORAZ / STOP PIECE / ANSCHLAG		1
9	30.BC299-401	0	STITEK / LABEL / SCHILD	P 0,5x65	1
10	31.0599-005	0	SAMOLEPKA / STICKER / AUFKLEBER		1
11	31.LM04-006	1	PRUZINA / SPRING / FEDER	7.1x50x194x14.25	1
12	91.173.007	0	SPINAC KONCOVY / END SWITCH / ENDSCHALTER	-RIWK	1
13	99.900.040	0	SAMOLEPKA / STICKER / AUFKLEBER		1
14	99.900.043	0	SAMOLEPKA / STICKER / AUFKLEBER		1
15	99.900.045	0	SAMOLEPKA / STICKER / AUFKLEBER		1
16	99.900.046	0	SAMOLEPKA / STICKER / AUFKLEBER		1
17	99.900.047	0	SAMOLEPKA / STICKER / AUFKLEBER		1
18	99.900.048	0	SAMOLEPKA / STICKER / AUFKLEBER		1
19	99.900.049	0	SAMOLEPKA / STICKER / AUFKLEBER		1
20	99.900.053	0	SAMOLEPKA / STICKER / AUFKLEBER		1
21	99.900.068	0	SAMOLEPKA / STICKER / AUFKLEBER	pouziti vysokozvizneno vozikku	4

1.ZRUSENA VANA 201.ER251-302 (VANA JE SOUCASTI PODSTAVCE 201.8001-500). 14.3.2019 SLEZACKOVA
2.PRIDAN ROZVADEC ELEKTRO 201.2330-030. 318/ZM447 1.11.2019 KOSYK
3.ZRUS.SAMOLEPKA 31.0508-005 A CERTIFIKACNI SAMOLEPKA 99.901.032. 029/ZM096 11.3.2021 SLEZACKOVA

Cislo Sestavy/Number of assembly/Nummer der Baugruppe; Verze (Ver.)/Version/Version; Nazev sestavy/Assembly title/Name der Baugruppe; Pozice (Poz.)/Position/Position;
Objednaci cislo/Purchase order number/Bestellnummer; Nazev polozky/Volume title/Name der Position; Rozmer/Stock size/Abmessung

7.5. Svěrák / Vice / Schraubstock

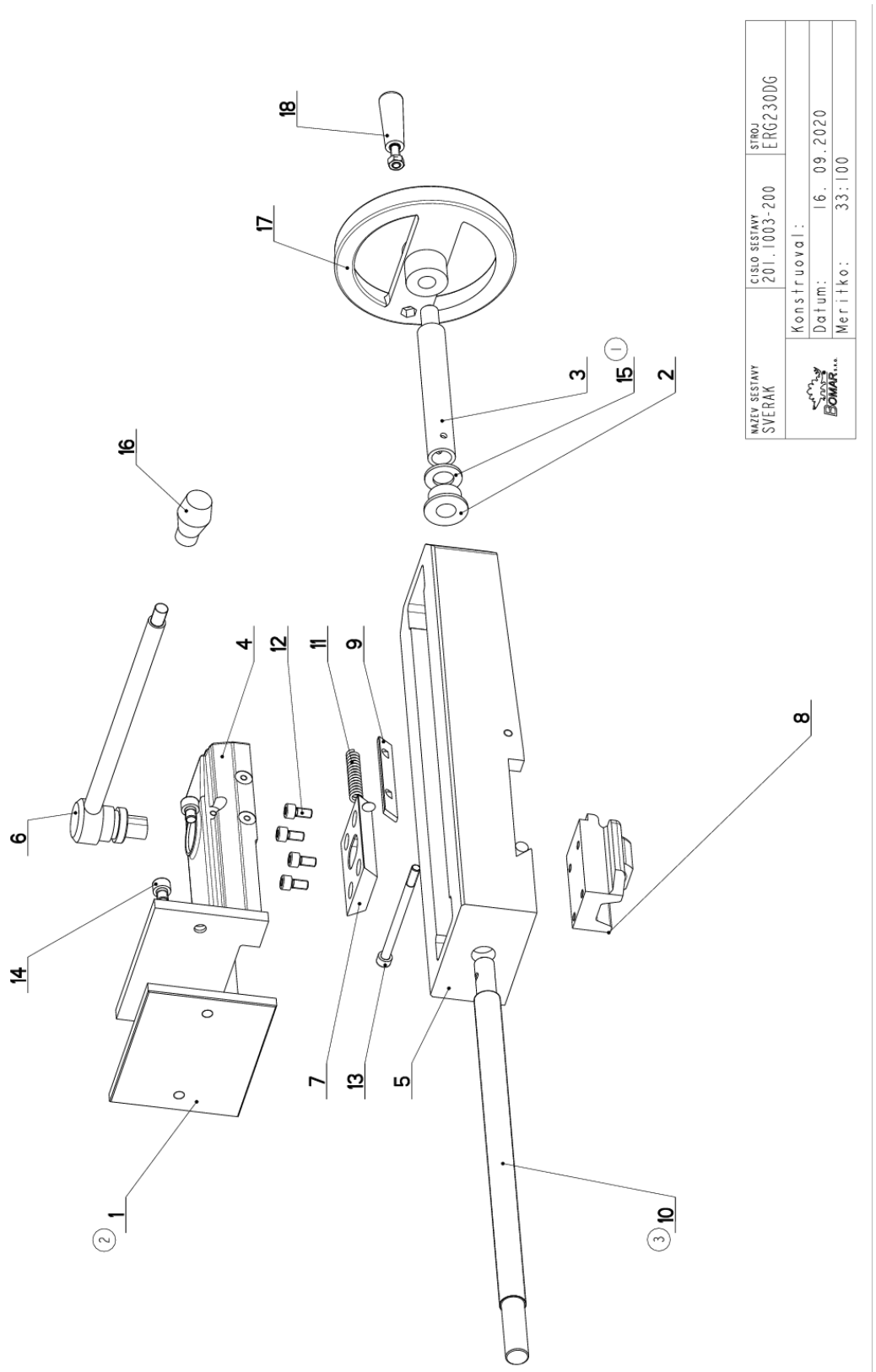

7.6. Kusovník / Piece list / Stückliste - Svěrák / Vice / Schraubstock

Cislo Sestavy	Ver.	Nazev sestavy
201.1003-200	3	SVERAK/VICE/SCHRAUBSTOCK

Poz.	Objednaci cislo	Ver.	Nazev polozky	Rozmer	Ks
1	30.0703-006 (2)	0	CELIST / JAW / BACKE	HR 120x10	1
2	30.1003-007	1	POUZDRO / SLEEVE / BÜCHSE	d 40	1
3	30.1003-009	1	NASTAVEC / EXTENSION / ANSATZ	TYC 25	1
4	30.1003-011	4	CELIST / JAW / BACKE	ODLITEK	1
5	30.1003-012	0	TELESO SVERAKU / VICE BODY / SCHRAUBSTOCKKÖRPER	ODLITEK	1
6	30.1003-015	1	EXCENTR / CAM / EXZENTER		1
7	30.1003-017	0	VEDENI / GUIDE / BACKENFÜHRUNG	HR 65x15	1
8	30.1003-018	2	MATICE / NUT / MUTTER		1
9	30.1003-021	0	LISTA / TRIM / LEISTE	HR 20x5	1
10	31.1003-010 (3)	3	SROUB / BOLT / SCHRAUBE	TR24x5L	1
11	31.1003-016	0	PRUZINA / SPRING / FEDER	2,24x12x56x16	1
12	90.001.25.031	0	SROUB IMBUS / ALLEN HEAD BOLT / IMBUSSCHRAUBE	8x16	4
13	90.001.25.042	0	SROUB IMBUS / ALLEN HEAD BOLT / IMBUSSCHRAUBE	M8X120	1
14	90.001.25.043	0	SROUB IMBUS / ALLEN HEAD BOLT / IMBUSSCHRAUBE	M10X12	2
15	90.150.50.010 (1)	0	PODLOZKA / WASHER / UNTERLEGSCHEIBE	PODLOZKA 19	1
16	94.002.001	0	HLAVICE / HEAD / KOPF		1
17	94.010.001	0	KOLECKO / WHEEL / ROLLE		1
18	94.010.002	0	RUKOJET / HANDLE / GRIFF		1

1.ZRUS.PODLOZKA 30.1003-022 A NAHR.90.150.50.010. 291/ZM061 23.23.2012 SLEZACKOVA
2.ZRUS.CELIST 30.0703-018 A NAHR.30.0703-006 . 306/ZM015 29.1.2013 SLEZACKOVA
3.PRECISLOVAN SROUB 30.1003-010 NA 31.1003-010. 241/ZM294 16.9.2020 SLEZACKPOVA

Cislo Sestavy/Number of assembly/Nummer der Baugruppe; Verze (Ver.)/Version/Version; Nazev sestavy/Assembly title/Name der Baugruppe; Pozice (Poz.)/Position/Position; Objednaci cislo/Purchase order number/Bestellnummer; Nazev polozky/Volume title/Name der Position; Rozmer/Stock size/Abmessung

7.7. Podstavec / Base / Untersatz

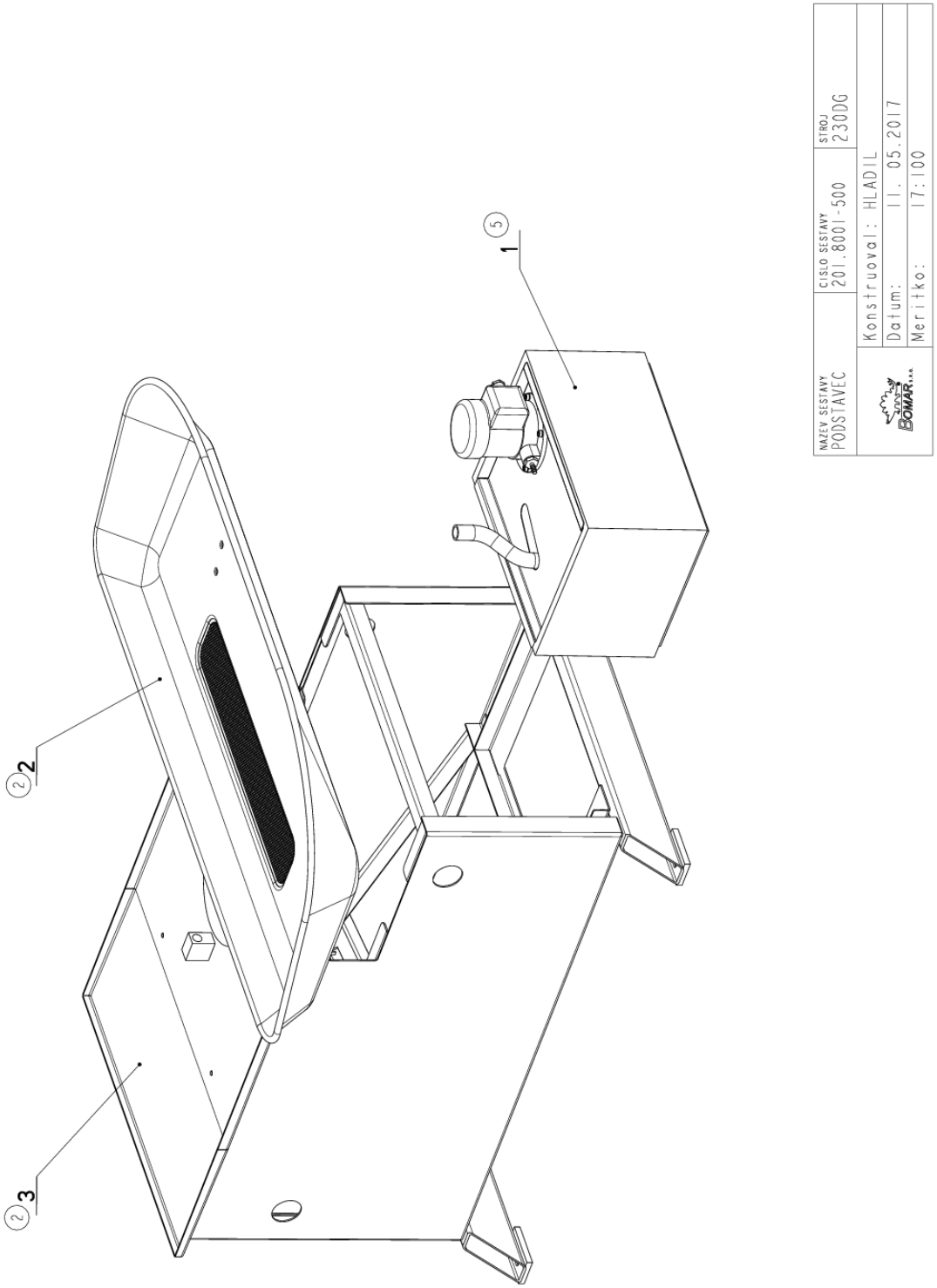

7.8. Kusovník / Piece list / Stückliste - Podstavec / Base / Untersatz

Cislo Sestavy	Ver.	Nazev sestavy
201.8001-500	5	PODSTAVEC/BASE/UNTERSATZ

Poz.	Objednaci cislo	Ver.	Nazev polozky	Rozmer	Ks
1	201.0506-100 (5)	5	CHLAZENI / COOLING / KÜHLUNG		1
2	201.ER251-302 (2)	2	VANA / TANK / WANNE		1
3	30.ER231-101 (2)	0	PODSTAVEC / BASE / UNTERSATZ		1

1.ZRUS.NADRZ 94.403.001 A NAHR.94.403.003,ZRUS.VIKO 30.8006-001 A NAHR.30.8006-301. 188/ZM195 24.7.2013 SLEZACKOVA
2.ZRUS.PODSTAVEC 30.8001-051 A NAHR.30.ER231-101,ZRUS.VANA 30.0501-602 A NAHR.201.ER251-302.023/ZM224 20.7.2016 SLEZACKOVA
3.PRIDAN DRZAK 30.ER251-014. 155/ZM281 16.9.2016 SLEZACKOVA
4.ZRUSENO CERPADLO 91.020.019 A NAHRAZENO 91.020.035,PRID.REDUKCE 94.202.020,ZRUSENO VIKO 30.8006-301 A NAHR.30.8006-501, ZRUS.DRZAK 30.ER251-014,PRIDANO 4xPODLOZKA 90.152.50.001,4xMATICE M6(90.100.55.004),4xSROUB M16x18(90.001.25.076). 112/ZM151 25.4.2017 SLEZACKOVA
5.ZRUSENY SOUCASTI CHLAZENI A NAHRAZENY SESTAVOU 201.0506-100. 127/ZM172 11.5.2017 SLEZACKOVA

Cislo Sestavy/Number of assembly/Nummer der Baugruppe; Verze (Ver.)/Version/Version; Nazev sestavy/Assembly title/Name der Baugruppe; Pozice (Poz.)/Position/Position; Objednaci cislo/Purchase order number/Bestellnummer; Nazev polozky/Volume title/Name der Position; Rozmer/Stock size/Abmessung

7.9. Chlazení / Cooling / Kühlung

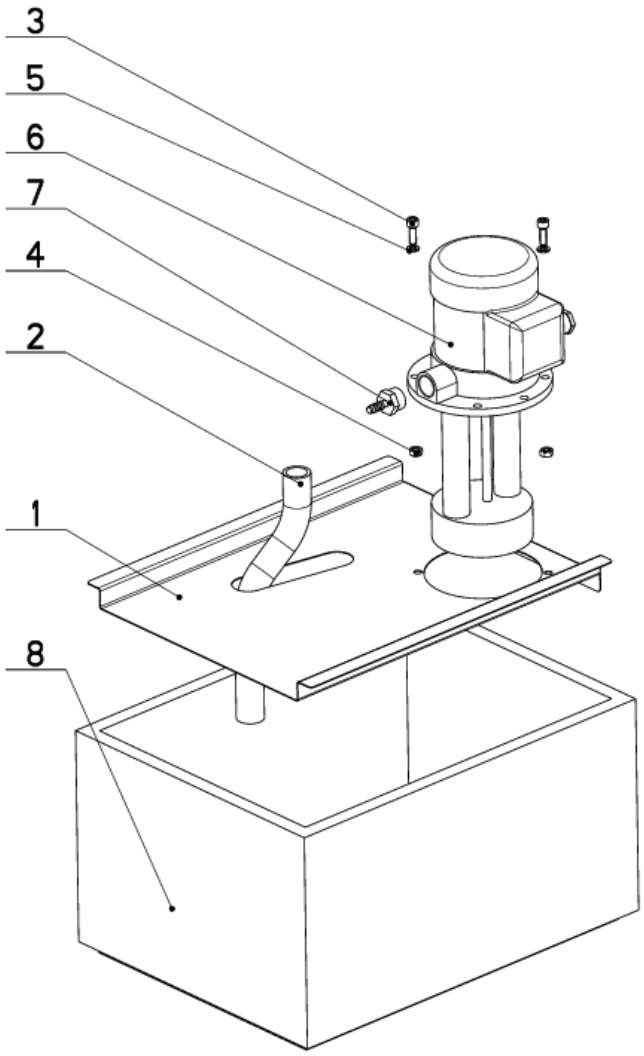

NAZEV SESTAVY	CISLO SESTAVY	STROJ
CHLAZENI	201.0506-100	ERGO250

BOMAR	Konstruoval: NEUMANN
	Datum: 15. 08.2018
	Meritko: 1:5

Cislo Sestavy	Ver.	Nazev sestavy
201.0506-100	6	CHLAZENI/COOLING/KÜHLUNG

Poz.	Objednaci cislo	Ver.	Nazev polozky	Rozmer	Ks
1	30.8006-501 (5)	2	VIKO / COVER / DECKEL	P 0,8 x329	1
2	42.020.003	0	HADICE / HOSE / SCHLAUCH	19x3	1
3	90.001.25.076 (6)	0	SROUB IMBUS / ALLEN HEAD BOLT / IMBUSSCHRAUBE	M6X18	2
4	90.100.55.004 (6)	0	MATICE / NUT / MUTTER	MATICE _ M6	2
5	90.152.50.001 (6)	0	PODL VEJIROVA ZN / /	6.4	2
6	91.020.035 (4)	0	CERPADLO CHLAZENI / COOLING PUMP / KÜHLMITTELPUMPE	230/400V	1
7	94.202.020 (4)	0	REDUKCE / REDUCTION / ADAPTOR / REDUKTION	1/2"-6	1
8	94.403.003	0	NADRZ / CONTAINER / BEHALTER		1

1.ZRUS.CERPADLO 91.020.005 A NAHR.91.020.019,ZRUS.VIKO 30.0506-201 A NAHR.30.8006-301,ZRUS.SOUC.30.0506-003, 90.100.55.004,94.202.005,42.020.001,99.260.001,94.202.002. 299/ZM274 12.11.2013 SLEZACKOVA

2.PRIDANO SITO 30.8006-002. 024/ZM100 27.4.2016 SLEZACKOVA

3.ZRUSEN DRZAK 30.8006-002 A NAHR.30.ER251-014. 155/ZM281 16.9.2016 SLEZACKOVA

4.ZRUS.CERPADLO 91.020.019 A NAHR.91.020.035,ZRUS.VIKO 30.8006-301 A NAHR.30.8006-401,ZRUS.DRZAK 30.ER251-014, PRID.REDUKCE 94.202.020,4xPODLOZKA 6,4(90.152.50.001),4xMATICE M6(90.100.55.004),4xSROUB M6x18(90.001.25.076) 112/ZM151 19.4.2017 SLEZACKOVA

5.ZRUSENO VIKO 30.8006-401 A NAHR.30.8006-501.127/ZM172 10.5.2017 SLEZACKOVA

6.ZM. POCTU ZE 4 DILU SROUBENI NA 2: 90.001.25.076, 90.100.55.004, 90.152.50.001. 159/ZM284 15.8.2018 SZABARI

Cislo Sestavy/Number of assembly/Nummer der Baugruppe; Verze (Ver.)/Version/Version; Nazev sestavy/Assembly title/Name der Baugruppe; Pozice (Poz.)/Position/Position; Objednaci cislo/Purchase order number/Bestellnummer; Nazev polozky/Volume title/Name der Position; Rozmer/Stock size/Abmessung

7.11. Vana / Tank / Wanne

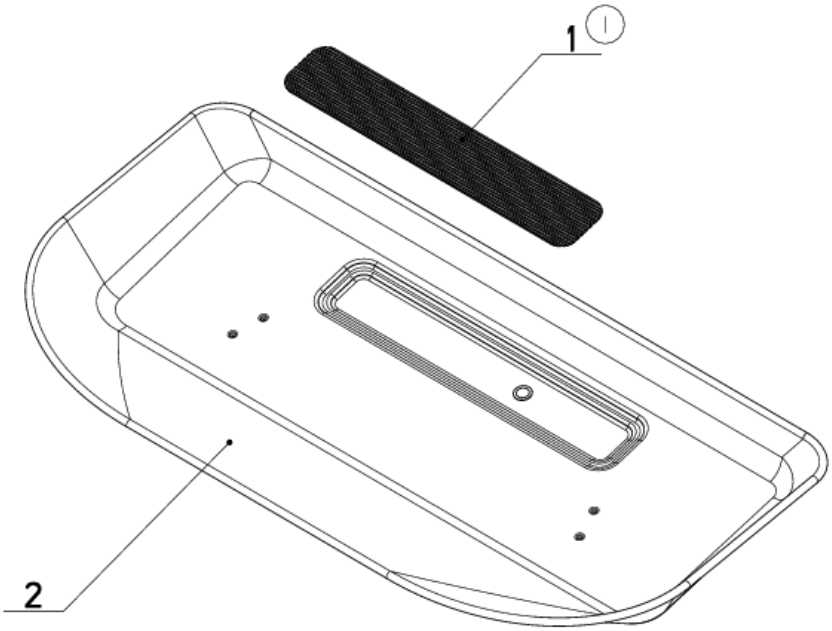

NAZEV SESTAVY	CISLO SESTAVY	STROJ
VANA	201.ER251-302	ERGO.250

BOMAR	Konstruoval: FABER
	Datum: 23. 10.2017
	Meritko: 13:100

7.12. Kusovník / Piece list / Stückliste - Vana / Tank / Wanne

Cislo Sestavy	Ver.	Nazev sestavy
201.ER251-302	2	VANA/TANK/WANNE

Poz.	Objednaci cislo	Ver.	Nazev polozky	Rozmer	Ks
1	30.ER251-304 (1)	0	SITO / SIEVE / GITTERWERK	P1x95	1
2	30.ER251-305	1	VANA / TANK / WANNE		1

1.PRIDAN KROUZEK 20x2(96.002.046),PODLOZKA 20(90.167.00.001),ZRUS.VANA 31.ER251-302.1 A NAHR.30.ER251-305. 213/ZM177 9.6.2016 SLEZACKOVA

2.ZRUS.TRUBKA 30.ER251-303,PODLOZKA 90.167.00.001,KROUZEK 96.002.046. 265/ZM345 21.10.2016 SLEZACKOVA

Cislo Sestavy/Number of assembly/Nummer der Baugruppe; Verze (Ver.)/Version/Version; Nazev sestavy/Assembly title/Name der Baugruppe; Pozice (Poz.)/Position/Position; Objednaci cislo/Purchase order number/Bestellnummer; Nazev polozky/Volume title/Name der Position; Rozmer/Stock size/Abmessung

7.13. Konzola otočná / Turnable consol / Drehkonsole

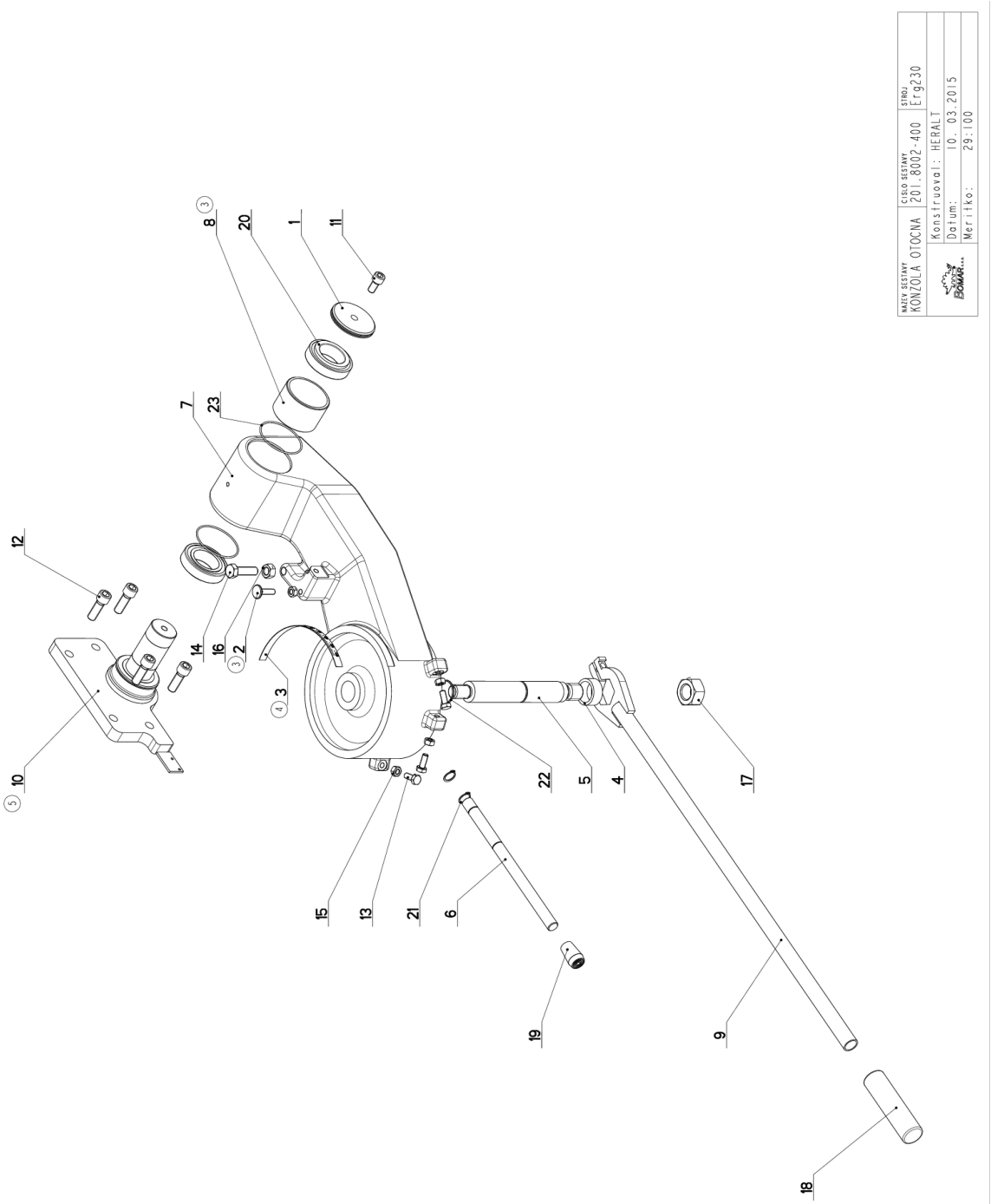

7.14. Kusovník / Piece list / Stückliste - Konzola otočná / Turnable consol / Drehkonsole

Cislo Sestavy	Ver.	Nazev sestavy
201.8002-400	5	KONZOLA OTOCNA/TURNABLE CONSOL/DREHKONSOLE

Poz.	Objednaci cislo	Ver.	Nazev polozky	Rozmer	Ks
1	30.0702-012	2	VIKO / COVER / DECKEL	P 8x70	1
2	30.0702-013 (3)	0	SROUB / BOLT / SCHRAUBE	M8	1
3	30.8002-009 (4)	1	MERITKO / MEASURE / SKALA	P 0.5x12	1
4	30.8002-311	0	TRUBKA / TUBE / ROHR	TR 38x4	1
5	30.8002-312	0	CEP / LUG / BOLZEN	D 30	1
6	30.8002-313	2	TYC / POLE / STANGE	D 16h9	1
7	30.8002-315	5	KONZOLA / CONSOLE / KONSOLE	ODLITEK	1
8	30.8002-403 (3)	0	POUZDRO / SLEEVE / BÜCHSE	TR 70x5	1
9	30.LK02-207	0	PAKA / LEVER / HEBEL	SVARENO	1
10	30.SC232-114 (5)	4	KONZOLA / CONSOLE / KONSOLE		1
11	90.001.25.046	0	SROUB IMBUS / ALLEN HEAD BOLT / IMBUSSCHRAUBE	M10X20	1
12	90.001.25.059	0	SROUB IMBUS / ALLEN HEAD BOLT / IMBUSSCHRAUBE	M12X35	4
13	90.005.55.015	0	SROUB 6HRANNY / 6 SIDED BOLT / SECHSKANTSCHRAUBE	SROUB M8X20	3
14	90.005.55.034	0	SROUB 6HRANNY / 6 SIDED BOLT / SECHSKANTSCHRAUBE	SROUB M12X40	1
15	90.100.55.005	0	MATICE / NUT / MUTTER	MATICE _ M8	4
16	90.100.55.007	0	MATICE / NUT / MUTTER	MATICE _ M12	1
17	90.100.55.010	0	MATICE / NUT / MUTTER	MATICE _ M24	1
18	94.004.502	0	RUKOJET / HANDLE / GRIFF	D22	1
19	94.102.025	0	RUKOJET / HANDLE / GRIFF	465366	1
20	95.300.002	0	LOZISKO KUZELIK / BEARING / LAGER	32008AX	2
21	95.800.007	0	SEGR HRIDEL. / OUTSIDE SAFETY RING / SICHERUNGSRING AUSSEN	POJISTNY KROUZEK 16	2
22	96.001.008	0	O-KROUZEK STATIC / STATIC O RING / O-RING STATISCH	26x2 NBR 70SH	1
23	96.001.018	0	TESNENI / SEALING / DICHTUNG		2

1.ZRUSEN DRZAK 30.8002-401 A NAHR.30.8002-402. 010/ZM008 22.1.2013 SLEZACKOVA
2.ZRUS.DRZAK 30.8002-402,SROUB M8x16(90.001.25.031),SROUB M12x85(90.005.55.068),MATICE M12(90.100.55.007). 046/ZM040 21.2.2013 SLEZACKOVA
3.ZRUS.POUZDRO 30.0702-008 A NAHR.30.8002-403,ZRUS.SROUB M8x40(90.005.55.019) A NAHR.30.0702-013. 010/ZM168 12.6.2013 SLEZACKOVA
4.ZRUS.MERITKO 31.8002-009 A NAHR.30.8002-009. 276/ZM451 5.12.2018 SZABARI
5.ZRUSENA KONZOLA 30.8002-314 A NAHRAZENA 30.SC232-114. 317/ZM004 11.1.2021 SLEZACKOVA

Cislo Sestavy/Number of assembly/Nummer der Baugruppe; Verze (Ver.)/Version/Version; Nazev sestavy/Assembly title/Name der Baugruppe; Pozice (Poz.)/Position/Position; Objednaci cislo/Purchase order number/Bestellnummer; Nazev polozky/Volume title/Name der Position; Rozmer/Stock size/Abmessung

7.15. Podstavec svěráku / Vice base / Schraubstockuntersatz

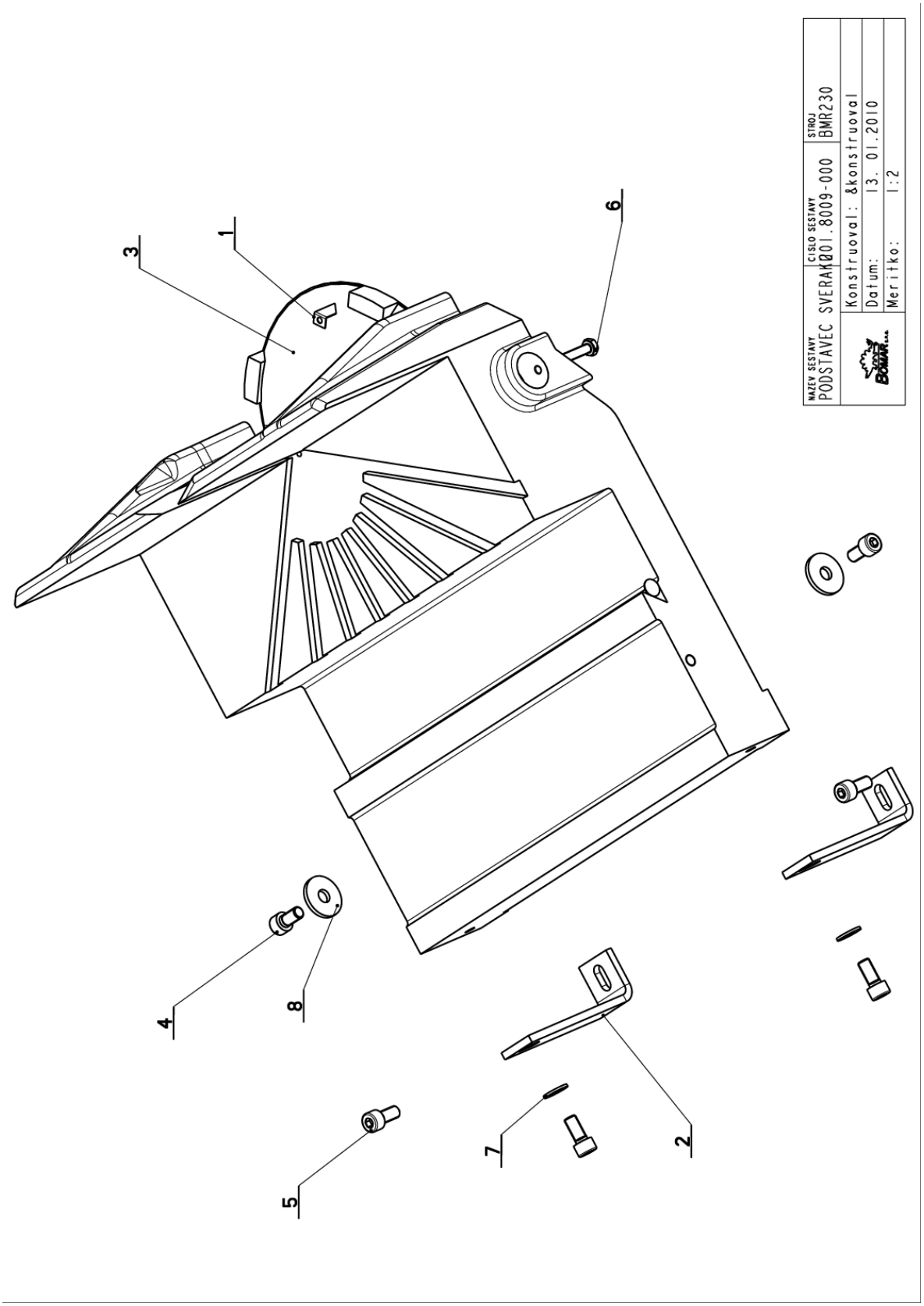

7.16. Kusovník / Piece list / Stückliste

Podstavec svěráku / Vice base / Schraubstockuntersatz

Cislo Sestavy	Ver.	Nazev sestavy
201.8009-000	2	PODSTAVEC SVERAKU/VICE BASE/SCHRAUBSTOCKUNTERSATZ

Poz.	Objednaci cislo	Ver.	Nazev polozky	Rozmer	Ks
1	30.8002-302	0	UKAZATEL / INDICATOR / ZEIGER	P 0.5x10	1
2	30.8009-002	5	DRZAK / HOLDER / HALTER	TYC 30x5	2
3	30.8009-101	0	TELESO POD. SVERAKU / /		1
4	90.001.25.031	0	SROUB IMBUS / ALLEN HEAD BOLT / IMBUSSCHRAUBE	8x16	2
5	90.001.25.105	0	SROUB IMBUS / ALLEN HEAD BOLT / IMBUSSCHRAUBE	M8X18	4
6	90.005.55.010	0	SROUB 6HRANNY / 6 SIDED BOLT / SECHSKANTSCHRAUBE	SROUB M6X30	1
7	90.150.50.005	0	PODLOZKA / WASHER / UNTERLEGSCHEIBE	PODLOZKA 8,4	2
8	90.151.50.005	0	PODLOZKA / WASHER / UNTERLEGSCHEIBE	PODLOZKA 8	2

7.17. Rozvadeč elektro / Electro distributor / Schaltschrank

Cislo Sestavy
201.BC2330-030

Ver.
0

Nazev sestavy
ROZVADEČ ELEKTRO/ELECTRO DISTRIBUTOR/SCHALTSCHRANK

Poz.	Objednaci cislo	Ver.	Nazev polozky	Rozmer	Ks
1	30.8004-438	1	PLECH ELEKTRO / /	P 2x117	1
2	30.BC235-053	2	KRABICE ELEKTRO / ELECTRO BOX / ELEKTRODOSE	220x170x80	1
3	61.352.003	0	TESNENI / SEALING / DICHTUNG	PE 9x5	1
4	94.500.004	0	PRUCHODKA / LEADTHROUGH / DURCHFÜHRUNG	d 15	1

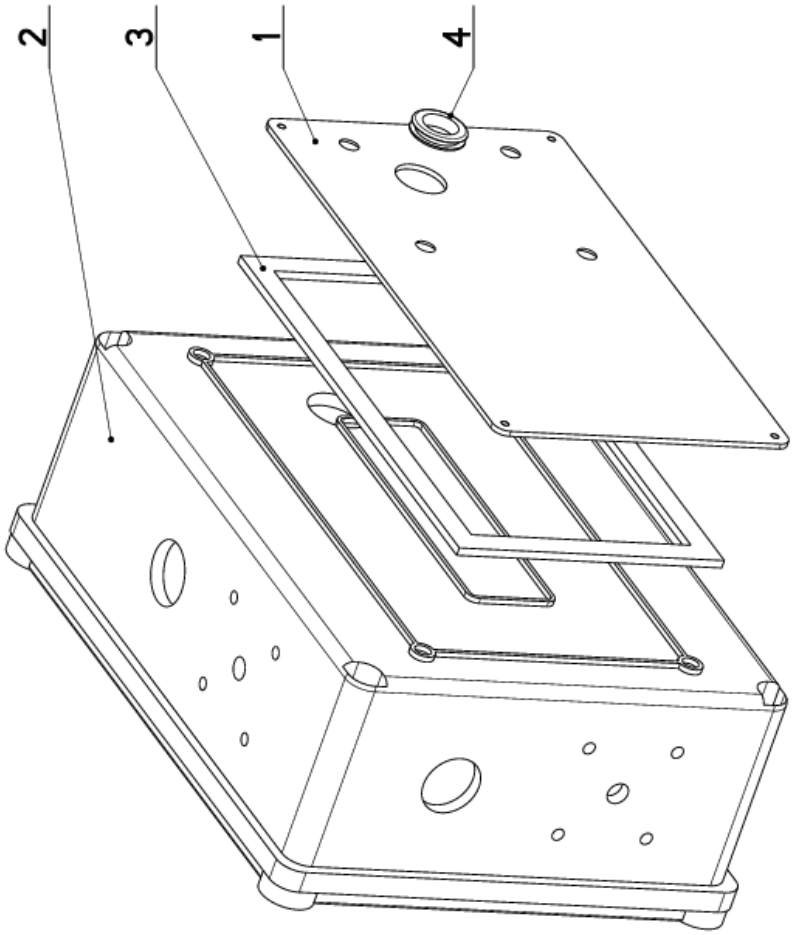

Cisla Sestavy/Number of assembly/Nummer der Baugruppe; Verze (Ver.)/Version/Version; Nazev sestavy/Assembly title/Name der Baugruppe; Pozice (Poz.)/Position/Position;
Objednaci cislo/Purchase order number/Bestellnummer; Nazev polozky/Volume title/Name der Position; Rozmer/Stock size/Abmessung

7.18. Rameno / Shoulder / Sägerahmen

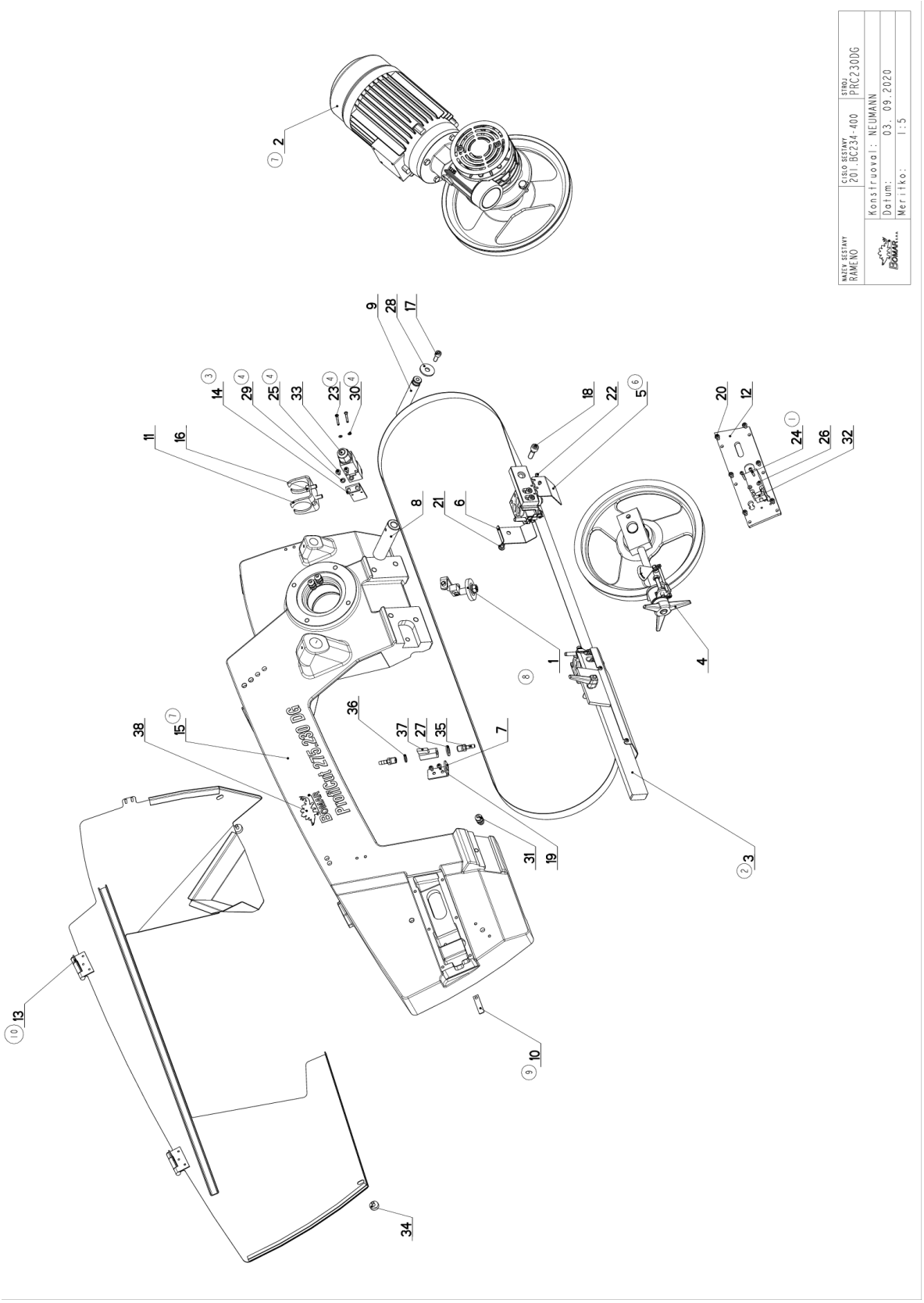

7.19. Kusovník / Piece list / Stückliste - Rameno / Shoulder / Sägerahmen

Cislo Sestavy	Ver.	Nazev sestavy
201.BC234-400	10	RAMENO/SHOULDER/SÄGERAHMEN

Poz.	Objednaci cislo	Ver.	Nazev polozky	Rozmer	Ks
1	201.BC234-060	3	KARTAC / BRUSH / BÜRSTE		1
2	201.BC235-250 (7)	0	POHON / DRIVE / ANTRIEB		1
3	201.SC234-050 (2)	2	VEDENI PASU / BELT GUIDE / SÄGEBANDFÜHRUNG		1
4	201.SC238-000	0	NAPINANI / TENSIONING / SPANNUNG		1
5	30.0704-038 (6)	1	KRYT PASU / BELT COVER / BANDABDECKUNG	P 1.5x56	1
6	30.0704-043	0	KRYT PASU / BELT COVER / BANDABDECKUNG	P 1.5x46	1
7	30.1814-011	2	DRZAK / HOLDER / HALTER	P 3x76	1
8	30.8004-401	1	CEP / LUG / BOLZEN	D 30	1
9	30.8004-405	0	TYC / /	TYC 20	1
10	30.ER254-002 (9)	1	PLECH / PLATE / BLECH	P 1,5x12	1
11	30.ER254-008	2	DRZAK / HOLDER / HALTER	P 4x60	1
12	30.SC234-002	1	KRYT NAPINANI / TENSIONING COVER / BANDSPANNUNGSABDECKUNG	P 6x80	1
13	30.SC234-004 (10)	1	KRYT RAMENE / SHOULDER COVER / RAHMENABDECKUNG		1
14	30.SC234-106 (3)	1	DRZAK / HOLDER / HALTER	P3x32	1
15	30.SC234-111 (7)	1	RAMENO / SAW ARM / SÄGERAHMEN	ODLITEK	1
16	90.001.25.031	0	SROUB IMBUS / ALLEN HEAD BOLT / IMBUSSCHRAUBE	8x16	2
17	90.001.25.032	0	SROUB IMBUS / ALLEN HEAD BOLT / IMBUSSCHRAUBE	8x20	1
18	90.001.25.048	0	SROUB IMBUS / ALLEN HEAD BOLT / IMBUSSCHRAUBE	M10X30	1
19	90.013.27.003	0	SROUB / BOLT / SCHRAUBE	M5X10	2
20	90.013.27.007	0	SROUB PULKULATY / HALF ROUND BOLT / HALBRUNDSCHRAUBE	M6X10	6
21	90.013.27.011	0	SROUB PULKULATY / HALF ROUND BOLT / HALBRUNDSCHRAUBE	M8X12	1
22	90.013.27.017	0	SROUB PULKULATY / HALF ROUND BOLT / HALBRUNDSCHRAUBE	M4x6	2
23	90.013.9Z.103 (4)	0	SROUB PULKULATY / HALF ROUND BOLT / HALBRUNDSCHRAUBE	M4x25	2
24	90.013.9Z.104 (1)	0	SROUB PULKULATY / HALF ROUND BOLT / HALBRUNDSCHRAUBE	M4x30	2
25	90.013.9Z.114 (4)	0	SROUB PULKULATY / HALF ROUND BOLT / HALBRUNDSCHRAUBE	M6X10	2
26	90.150.50.002	0	PODLOZKA / WASHER / UNTERLEGSCHEIBE	PODLOZKA 4,3	2
27	90.150.50.007	0	PODLOZKA / WASHER / UNTERLEGSCHEIBE	PODLOZKA 13	1
28	90.151.50.001	0	PODLOZKA / WASHER / UNTERLEGSCHEIBE	PODLOZKA 10	1
29	90.152.50.001 (4)	0	PODL VEJIROVA ZN / /	6.4	2
30	90.152.50.005 (4)	0	PODLOZKA VEJIROVA / /	PODLOZKA 4,3	2
31	91.070.010	0	PRUCHODKA / LEADTHROUGH / DURCHFÜHRUNG	M12x1.5 CERNA	3
32	91.173.007	0	SPINAC KONCOVY / END SWITCH / ENDSCHALTER		1
33	91.173.012	0	SPINAC KONCOVY / END SWITCH / ENDSCHALTER		1
34	94.007.002	0	SROUB / BOLT / SCHRAUBE		2

Cislo Sestavy/Number of assembly/Nummer der Baugruppe; Verze (Ver.)/Version/Version; Nazev sestavy/Assembly title/Name der Baugruppe; Pozice (Poz.)/Position/Position; Objednaci cislo/Purchase order number/Bestellnummer; Nazev polozky/Volume title/Name der Position; Rozmer/Stock size/Abmessung

7.20. Rameno / Shoulder / Sägerahmen

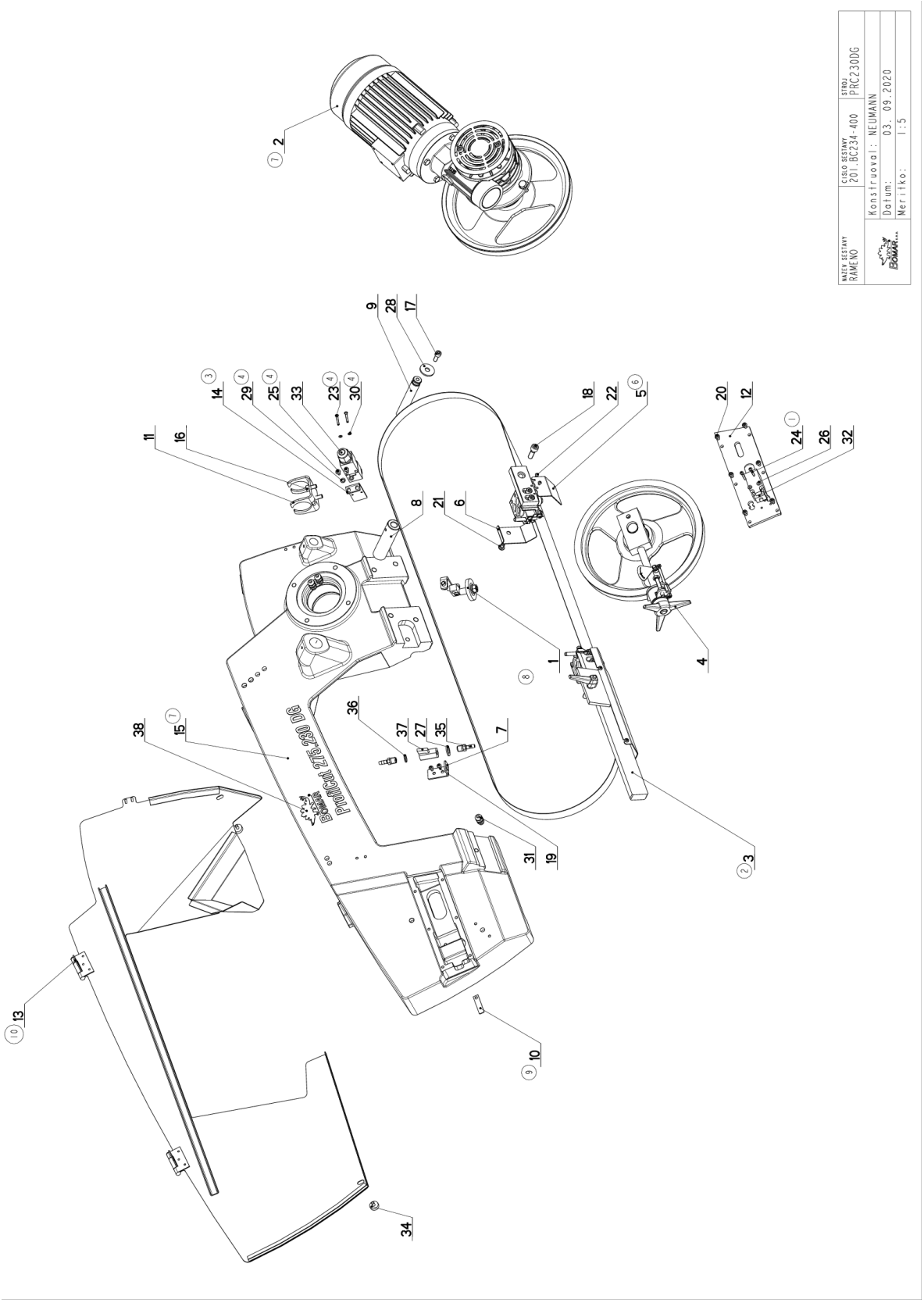

7.21. Kusovník / Piece list / Stückliste - Rameno / Shoulder / Sägerahmen

35	94.202.002	0	REDUKCE / REDUCTION / ADAPTOR / REDUKTION	GES 6/R1/4"	2
36	96.080.001	0	TESNENI / SEALING / DICHTUNG	17.8x13.5x2	1
37	99.260.003	0	VENTIL / VALVE / VENTIL	1/4"	1
38	99.901.107	0	SAMOLEPKA / STICKER / AUFKLEBER		1

1. PRID. 2xSROUB M4x30 90.013.9Z.104 171/ZM298 3.9.2018 NEDUCHAL
2. ZRUS.VEDENI PASU 201.8004-430 A DANO DO VEDENI PASU 201.SC234-050. 199/ZM356 5.10.2018 NEDUCHAL
3. PRIDAN DRZAK 30.SC234-106. 164/ZM222 31.5.2019 SCERBA
4. PRID.2xSROUB M6x10 90.013.9Z.111, 2xPODLOZKA 6,4 90.152.50.001,2xPODLOZKA 4,3 90.152.50.005,ZRUS.SROUB M4x30 90.013.9Z.104 A NAHR.M4x25 90.013.9Z.103. 164/ZM399 30.9.2019 SZAABARI
5. ZRUSEN POHON 201.8004-530 A NAHR.201.BC235-050. 318/ZM447 11.11.2019 SLEZACKOVA
6. ZRUSEN KRYT PASU 30.0704-041 A NAHR.30.0704-038. 361/ZM490 13.1.22019 KOSYK
7. ZRUS.POHON 201.BC235-050 A NAHR.201.BC235-250,ZRUS.RAMENO 30.SC234-101 A NAHR.30.SC234-111.060/ZM078 14.2.2020 SLEZACKOVA
8. ZRUS.KRYT RAMENE 30.SC234-004 A NAHR.30.BC234-304,PRID.KRYT KARTACKU 30.BC234-305. 187/ZM251 24.6.2020 SLEZACKOVA
9. PRIDAN PLECH 30.ER254-002. 213/ZM307 3.9.2020 SLEZACKOVA
10. ZRUS.KRYT RAMENE 30.BC234-304 A NAHR.30.SC234-004,ZRUS.KRYT 30.BC234-305. 273/ZM316 14.10.2020 SLEZACKOVA

Cislo Sestavy/Number of assembly/Nummer der Baugruppe; Verze (Ver.)/Version/Version; Nazev sestavy/Assembly title/Name der Baugruppe; Pozice (Poz.)/Position/Position; Objednaci cislo/Purchase order number/Bestellnummer; Nazev polozky/Volume title/Name der Position; Rozmer/Stock size/Abmessung

7.22. Pohon / Drive / Antrieb

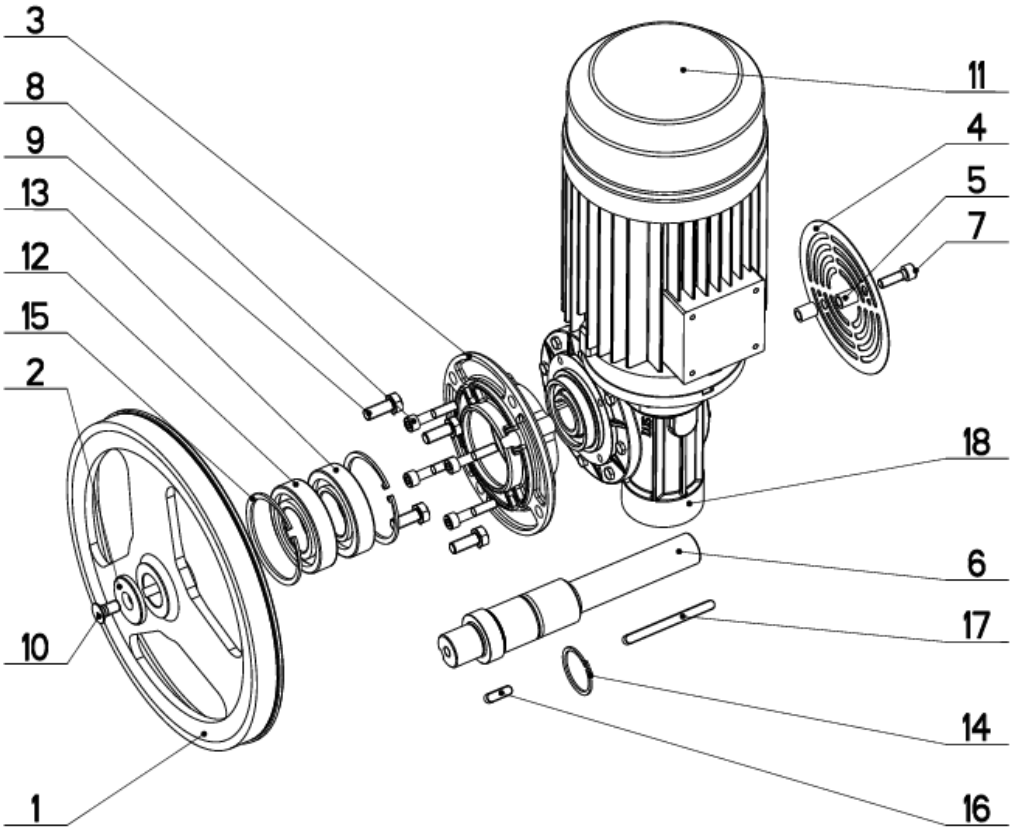

NAZEV SESTAVY	CISLO SESTAVY	STROJ
POHON	201.BC235-250	PROF. 230DG

Konstruoval:	MUSIL
Datum:	13. 02.2020
Meritko:	1:5

Cislo Sestavy	Ver.	Nazev sestavy
201.BC235-250	1	POHON/DRIVE /ANTRIEB

Poz.	Objednaci cislo	Ver.	Nazev polozky	Rozmer	Ks
1	30.0505-006	1	KOLO HNACI / DRIVE WHEEL / ANTRIEBSRAD	ODLITEK	1
2	30.1502-465 (1)	0	PODLOZKA / WASHER / UNTERLEGSCHEIBE	d 45	1
3	30.8004-426	1	PRIRUBA / FLANGE / FLANSCHE	ODLITEK	1
4	30.BC235-205	1	KRYT / COVER / ABDECKUNG	P0.8x140	1
5	30.BC235-207	1	DISTANC / DISTANCE / DISTANZ	TR 14x2,5	2
6	30.ER255-101	0	HRIDEL / SHAFT / WELLE	D 45	1
7	90.001.25.033	0	SROUB IMBUS / ALLEN HEAD BOLT / IMBUSSCHRAUBE	8x25	2
8	90.001.25.036	0	SROUB IMBUS / ALLEN HEAD BOLT / IMBUSSCHRAUBE	M8X40	4
9	90.005.55.024	0	SROUB 6HRANNY / 6 SIDED BOLT / SECHSKANTSCHRAUBE	SROUB M10X25	4
10	90.011.27.008	0	SROUB ZAPUSTNY / COUNTERSINK BOLT / SENKSCHRAUBE	SROUB M10X20	1
11	91.001.381	0	ELEKTROMOTOR / ELECTRIC MOTOR / ELEKTROMOTOR	90L-8/4-B14	1
12	95.001.021	0	LOZISKO / BEARING / LAGER	6208 2RS	1
13	95.200.001	0	LOZISKO / BEARING / LAGER	VALECKOVA L. IRADA	1
14	95.800.015	0	SEGR HRIDEL. / OUTSIDE SAFETY RING / SICHERUNGSRING AUSSEN	POJISTNY KROUZEK 40	1
15	95.801.013	0	SEGR DIRA / INSIDE SAFETY RING / SICHERUNGSRING INNEN	POJISTNY KROUZEK 80	2
16	95.810.007	0	PERO TESNE / TIGHT SPRING / PASSFEDER	PERO 8X7X25	1
17	95.810.028	0	PERO TESNE / TIGHT SPRING / PASSFEDER	PERO 8X7X90	1
18	99.006.017	0	PREVODOVKA SNEKOVA / WORM GEAR TRANSMISSION / SCHNECKENGETRIEBE	MI 60, I=20	1

1.ZRUSENA PODLOZKA 30.1201-465 A NAHR.30.1502-465. 244/ZM364 27.11.2020 SLEZACKOVA

Cislo Sestavy/Number of assembly/Nummer der Baugruppe; Verze (Ver.)/Version/Version; Nazev sestavy/Assembly title/Name der Baugruppe; Pozice (Poz.)/Position/Position;
Objednaci cislo/Purchase order number/Bestellnummer; Nazev polozky/Volume title/Name der Position; Rozmer/Stock size/Abmessung

7.24. Vedení pásu / Belt guide / Sägebandführung

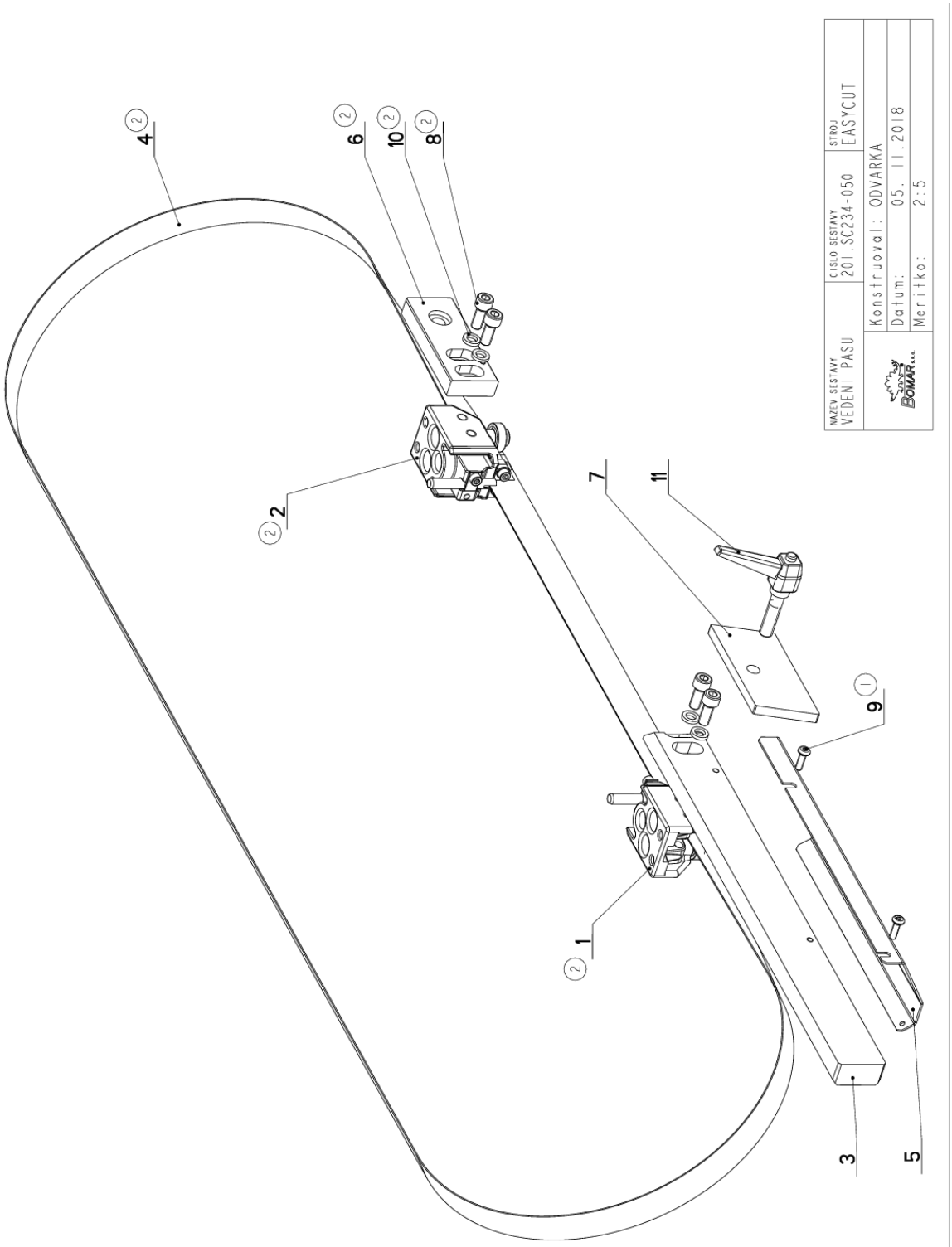

7.25. Kusovník / Piece list / Stückliste - Vedení pásu / Belt guide / Sägebandführung

Cislo Sestavy	Ver.	Nazev sestavy
201.SC234-050	2	VEDENI PASU/BELT GUIDE/SÄGEBANDFÜHRUNG

Poz.	Objednaci cislo	Ver.	Nazev polozky	Rozmer	Ks
1	201.0510-500 (2)	1	KOSTKA VODICI / LEAD CUBE / FÜHRUNGSKLOTZ	SESTAVA	1
2	201.0510-600 (2)	1	KOSTKA VODICI / LEAD CUBE / FÜHRUNGSKLOTZ	SESTAVA	1
3	30.0104-015	7	LISTA / TRIM / LEISTE	HR 40x20	1
4	30.0504-912 (2)	0	PAS PILOVY / SAW BELT / SÄGEBAND	2720x0,9x25(27)	1
5	30.0704-221	0	KRYT PASU / BELT COVER / BANDABDECKUNG	P 1,5x98	1
6	30.8004-431	4	LISTA / TRIM / LEISTE	HR 40x15	1
7	30.SC234-051 (2)	2	UPINKA / FASTENER / SPANNEISEN	P 8x50	1
8	90.001.25.032 (2)	0	SROUB IMBUS / ALLEN HEAD BOLT / IMBUSSCHRAUBE	8x20	4
9	90.013.27.005 (1)	0	SROUB PULKULATY / HALF ROUND BOLT / HALBRUNDSCHRAUBE	M5X16	2
10	90.163.00.001 (2)	0	PODLOZKA / WASHER / UNTERLEGSCHEIBE	M8 NORD-LOCK	4
11	94.008.013	0	PAKA UPINACI / ATTACHMENT LEVER / SPANNHEBEL	M10	1

1.ZRUSEN SROUB M5x16 90.001.25.009 A NAHR.M5x16 90.013.27.005 021/ZM100 21.3.2017 SLEZACKOVA
2.ZRUS.PODDILY KOSTKY A NAHR.SESTAVOU 201.0510-500,PRID.KOSTKA 201.0510-610,LISTA 30.8004-431 2xSROUB 90.001.25.032, 2xPODLOZKA 90.163.00.001,PRID.PAS 30.0504-912 199/ZM356 22.10.2018 SZABARI

Cislo Sestavy/Number of assembly/Nummer der Baugruppe; Verze (Ver.)/Version/Version; Nazev sestavy/Assembly title/Name der Baugruppe; Pozice (Poz.)/Position/Position; Objednaci cislo/Purchase order number/Bestellnummer; Nazev polozky/Volume title/Name der Position; Rozmer/Stock size/Abmessung

7.26. Kostka vodíci / Lead cube / Führungsklotz

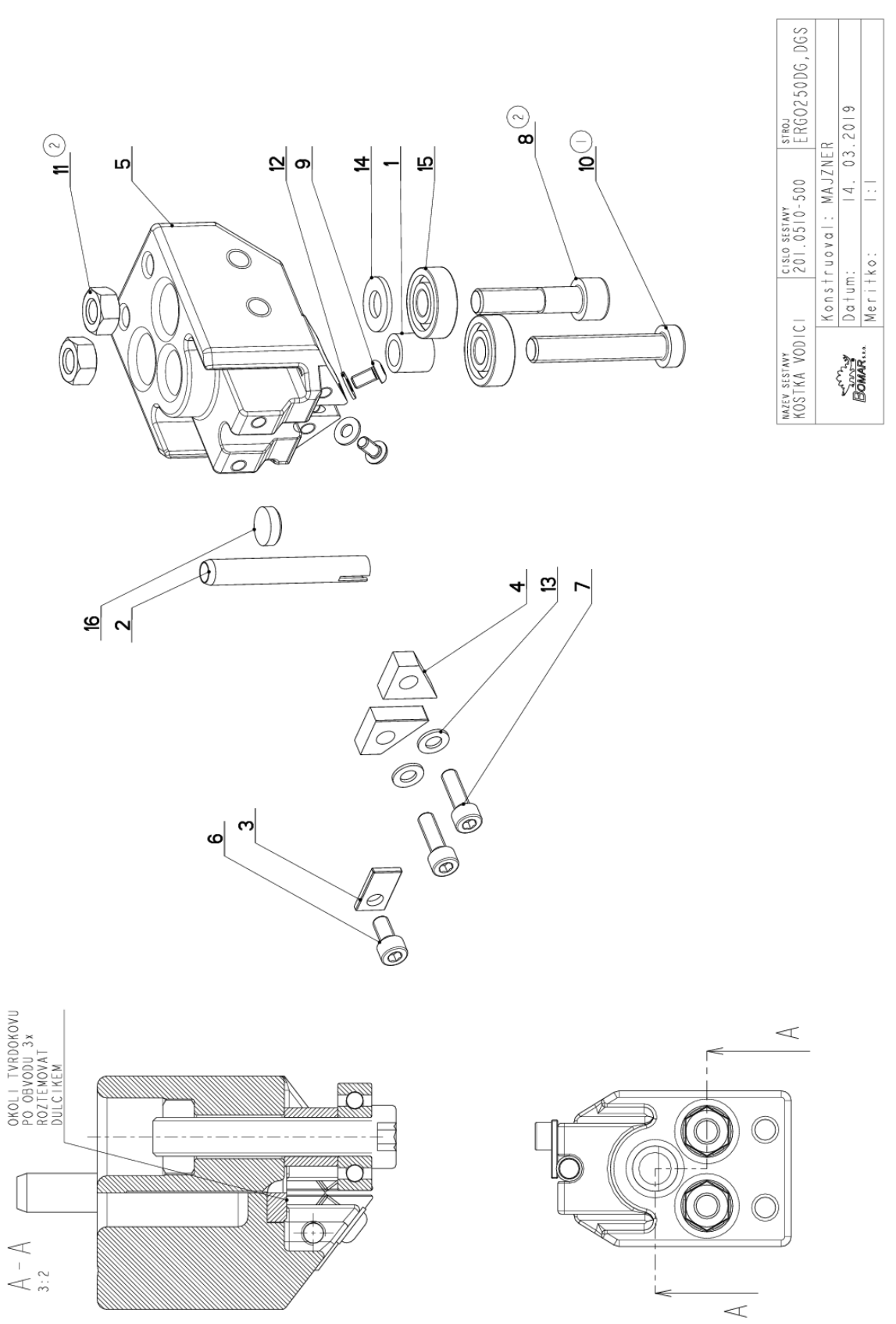

7.27. Kusovník / Piece list / Stückliste - Kostka vodící / Lead cube / Führungsklotz

Cislo Sestavy	Ver.	Nazev sestavy
201.0510-500	2	KOSTKA VODICI/LEAD CUBE/FÜHRUNGSKLOTZ

Poz.	Objednaci cislo	Ver.	Nazev polozky	Rozmer	Ks
1	30.LK10-006	1	TRUBKA / TUBE / ROHR	TR 12x2	1
2	30.LK10-008	2	TRUBKA / TUBE / ROHR	TR 8x1	1
3	30.LK10-109	0	PRILOZKA / STRAP / LASCHE	P 2-10	1
4	31.LK10-007	0	TVRDOKOV / HARD METAL / HM-SEGMENT	HR 18.1x15.5	2
5	85.LK10-201	0	KOSTKA VODICI / LEAD CUBE / FÜHRUNGSKLOTZ	ODLITEK	1
6	90.001.25.007	0	SROUB IMBUS / ALLEN HEAD BOLT / IMBUSSCHRAUBE	M5X10	1
7	90.001.25.009	0	SROUB IMBUS / ALLEN HEAD BOLT / IMBUSSCHRAUBE	M5X16	2
8	90.001.55.035 (2)	0	SROUB IMBUS / ALLEN HEAD BOLT / IMBUSSCHRAUBE	M8X35	1
9	90.013.27.001	0	SROUB / BOLT / SCHRAUBE	M4x8	2
10	90.015.25.033 (1)	0	SROUB IMBUS / ALLEN HEAD BOLT / IMBUSSCHRAUBE	M8x45	1
11	90.100.55.005 (2)	0	MATICE / NUT / MUTTER	MATICE _ M8	2
12	90.150.50.002	0	PODLOZKA / WASHER / UNTERLEGSCHEIBE	PODLOZKA 4,3	2
13	90.150.50.003	0	PODLOZKA / WASHER / UNTERLEGSCHEIBE	PODLOZKA 5,3	2
14	90.150.50.005	0	PODLOZKA / WASHER / UNTERLEGSCHEIBE	PODLOZKA 8,4	1
15	95.001.001	0	LOZISKO / BEARING / LAGER	608 2RS	2
16	99.040.002	0	TVRDOKOV / HARD METAL / HM-SEGMENT	d 12	1

1.ZRUS.SROUB M8x45 6HRANNY(90.005.55.020) A NAHR.M8x45 DIN7984(90.015.25.033). 286/ZM342 5.12.2012

2.ZRUS 90.005.55.018 A NAHR.90.001.25.035; ZRUS 90.101.55.001 A NAHR.90.100.55.005; 260/ZM432 29.11.2018 SCERBA

Cislo Sestavy/Number of assembly/Nummer der Baugruppe; Verze (Ver.)/Version/Version; Nazev sestavy/Assembly title/Name der Baugruppe; Pozice (Poz.)/Position/Position; Objednaci cislo/Purchase order number/Bestellnummer; Nazev polozky/Volume title/Name der Position; Rozmer/Stock size/Abmessung

7.28. Kostka vodíci / Lead cube / Führungsklotz

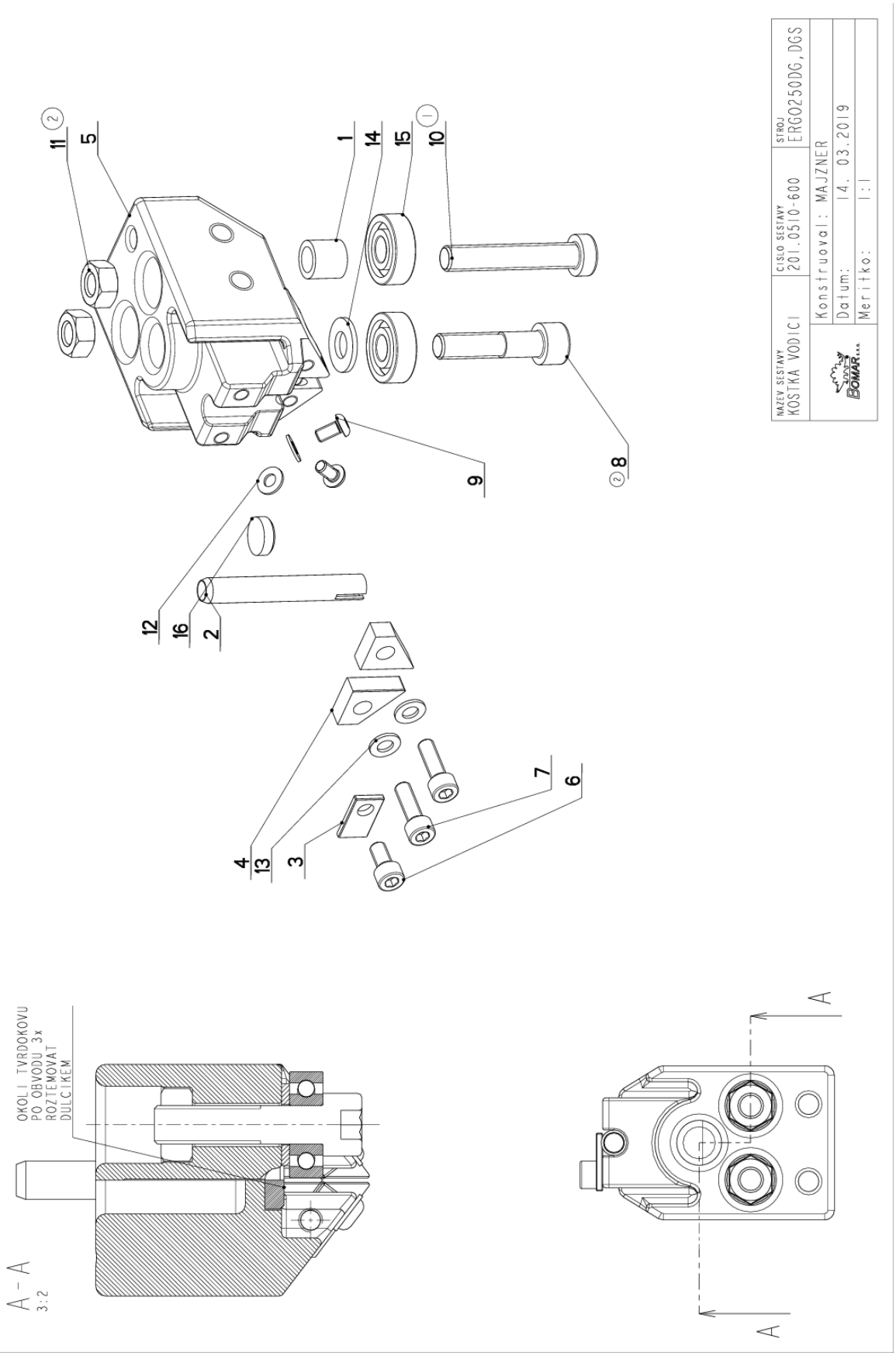

7.29. Kusovník / Piece list / Stückliste - Kostka vodící / Lead cube / Führungsklotz

Cislo Sestavy	Ver.	Nazev sestavy
201.0510-600	2	KOSTKA VODICI/LEAD CUBE/FÜHRUNGSKLOTZ

Poz.	Objednaci cislo	Ver.	Nazev polozky	Rozmer	Ks
1	30.LK10-006	1	TRUBKA / TUBE / ROHR	TR 12x2	1
2	30.LK10-008	2	TRUBKA / TUBE / ROHR	TR 8x1	1
3	30.LK10-109	0	PRILOZKA / STRAP / LASCHE	P 2-10	1
4	31.LK10-007	0	TVRDOKOV / HARD METAL / HM-SEGMENT	HR 18.1x15.5	2
5	85.LK10-201	0	KOSTKA VODICI / LEAD CUBE / FÜHRUNGSKLOTZ	ODLITEK	1
6	90.001.25.007	0	SROUB IMBUS / ALLEN HEAD BOLT / IMBUSSCHRAUBE	M5X10	1
7	90.001.25.009	0	SROUB IMBUS / ALLEN HEAD BOLT / IMBUSSCHRAUBE	M5X16	2
8	90.001.55.035 (2)	0	SROUB IMBUS / ALLEN HEAD BOLT / IMBUSSCHRAUBE	M8X35	1
9	90.013.27.001	0	SROUB / BOLT / SCHRAUBE	M4x8	2
10	90.015.25.033 (1)	0	SROUB IMBUS / ALLEN HEAD BOLT / IMBUSSCHRAUBE	M8x45	1
11	90.100.55.005 (2)	0	MATICE / NUT / MUTTER	MATICE _ M8	2
12	90.150.50.002	0	PODLOZKA / WASHER / UNTERLEGSCHEIBE	PODLOZKA 4,3	2
13	90.150.50.003	0	PODLOZKA / WASHER / UNTERLEGSCHEIBE	PODLOZKA 5,3	2
14	90.150.50.005	0	PODLOZKA / WASHER / UNTERLEGSCHEIBE	PODLOZKA 8,4	1
15	95.001.001	0	LOZISKO / BEARING / LAGER	608 2RS	2
16	99.040.002	0	TVRDOKOV / HARD METAL / HM-SEGMENT	d 12	1

1.ZRUS.SROUB M8x45 6HRANNY(90.005.55.020) A NAHR.M8x45 DIN7984(90.015.25.033). 286/ZM342 5.12.2012

2.ZRUS 90.005.55.018 A NAHR.90.001.25.035; ZRUS 90.101.55.001 A NAHR.90.100.55.005; 260/ZM432 29.11.2018 SCERBA

Cislo Sestavy/Number of assembly/Nummer der Baugruppe; Verze (Ver.)/Version/Version; Nazev sestavy/Assembly title/Name der Baugruppe; Pozice (Poz.)/Position/Position; Objednaci cislo/Purchase order number/Bestellnummer; Nazev polozky/Volume title/Name der Position; Rozmer/Stock size/Abmessung

Cislo Sestavy	Ver.	Nazev sestavy
201.BC234-060	3	KARTAC/BRUSH/BÜRSTE

Poz.	Objednaci cislo	Ver.	Nazev polozky	Rozmer	Ks
1	30.0104-022	0	DRZAK / HOLDER / HALTER	HR 16x16	1
2	30.0704-029 (3)	0	HRIDEL / SHAFT / WELLE	d 14	1
3	30.BC234-062 (2)	1	DRZAK / /	P 5x30	1
4	31.0704-031	0	KARTAC / BRUSH / BÜRSTE	D 501 d 9.5	1
5	90.001.25.029	0	SROUB IMBUS / ALLEN HEAD BOLT / IMBUSSCHRAUBE	M8X12	1
6	90.013.27.009	0	SROUB PULKULATY / HALF ROUND BOLT / HALBRUNDSCHRAUBE	M6X20	1
7	90.100.55.006	0	MATICE / NUT / MUTTER	MATICE _ M10	1
8	90.150.50.006	0	PODLOZKA / WASHER / UNTERLEGSCHEIBE	PODLOZKA 10,5	1
9	95.800.001	0	KROUZEK POJIST.VNEJS / OUTSIDE SAFETY RING / SICHERUNGSRING AUßEN	POJISTNY KROUZEK 6	1

1. PRID.DRZAK 30.BC234-062; PRID.DRZAK 30.0104-022; PRID.HRIDEL 30.BC234-063; ZRUS.HRIDEL 30.0704-029.
ZM.122/163 30.5.2016 SLEZACKOVA

2.UP.TVARU DRZAKU 30.BC234-062,ZRUS.HRIDEL 30.BC234-063 A NAHR.30.9704-007. 067/ZM070 10.3.2017 VLACH

3.ZRUS. HRIDEL 30.9704-007 A NAHR. 30.0704-029. 152/ZM208 14.5.2019 SZABARI

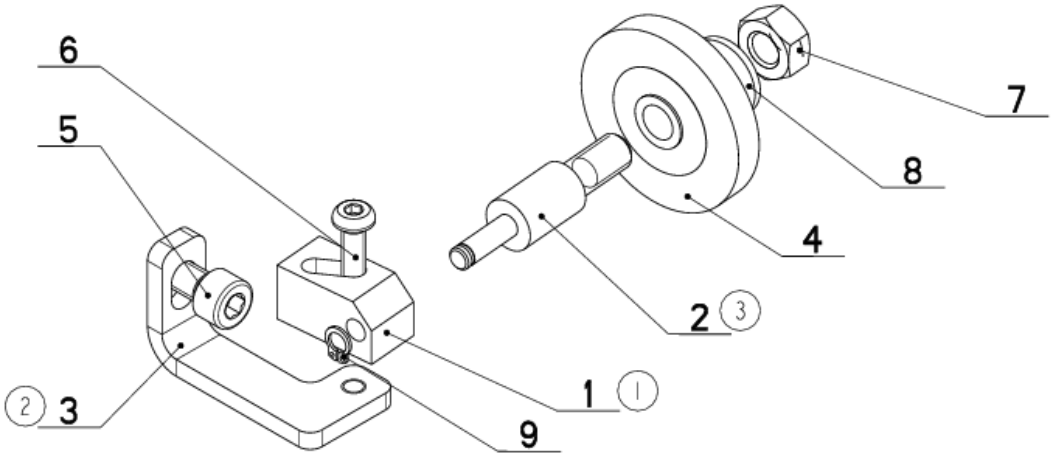

Cislo Sestavy/Number of assembly/Nummer der Baugruppe; Verze (Ver.)/Version/Version; Nazev sestavy/Assembly title/Name der Baugruppe; Pozice (Poz.)/Position/Position; Objednaci cislo/Purchase order number/Bestellnummer; Nazev polozky/Volume title/Name der Position; Rozmer/Stock size/Abmessung

7.31. Napínání / Tensioning / Spannung

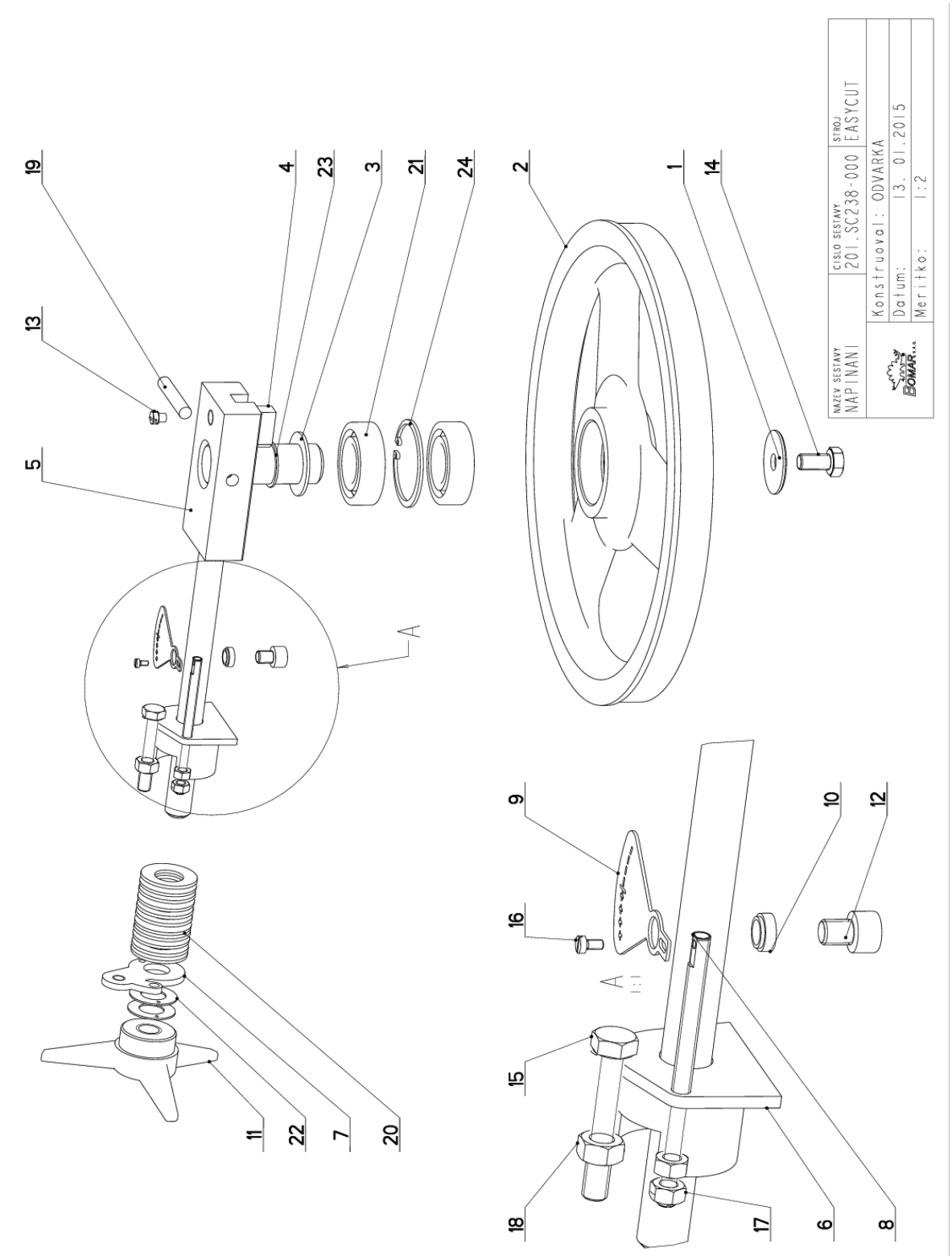

7.32. Kusovník / Piece list / Stückliste - Napínání / Tensioning / Spannung

Cislo Sestavy	Ver.	Nazev sestavy
201.SC238-000	0	NAPINANI/TENSIONING/SPANNUNG

Poz.	Objednaci cislo	Ver.	Nazev polozky	Rozmer	Ks
1	30.0505-011	0	PODLOZKA / WASHER / UNTERLEGSCHEIBE	TYC 40	1
2	30.0508-001	2	KOLO NAPINACI / TENSIONING WHEEL / UMLENKRAD		1
3	30.0702-023	0	KROUZEK DISTANCNI / DISTANCE RING / DISTANZRING	P 2x40	1
4	30.0708-102	0	CEP NAPINANI / TENSIONING LUG / SPANNUNGSBOLZEN		1
5	30.8004-411	2	VEDENI / GUIDE / BACKENFÜHRUNG		1
6	30.ER258-004	0	DRZAK / HOLDER / HALTER		1
7	30.ER258-005	0	PRILOZKA / STRAP / LASCHE	P 4x42	1
8	30.ER258-006	0	TAHLO / GUY ROD / ZUGSTANGE	M6	1
9	30.ER258-007	0	STUPNICE / SCALE / SKALA	P 1x41	1
10	30.ER258-008	0	TRUBKA / TUBE / ROHR	TR 12x2	1
11	31.0104-006	0	HVEZDICE / STAR WHEEL / STERN	PLAST	1
12	90.001.25.028	0	SROUB IMBUS / ALLEN HEAD BOLT / IMBUSSCHRAUBE	M8X10	1
13	90.004.20.007	0	SROUB STAVECI / ADJUSTMENT BOLT / STELLSCHRAUBE	SROUB M8X10	1
14	90.005.55.023	0	SROUB 6HRANNY / 6 SIDED BOLT / SECHSKANTSCHRAUBE	SROUB M10X20	1
15	90.005.55.XXX	0	SROUB 6HRANNY / 6 SIDED BOLT / SECHSKANTSCHRAUBE	SROUB M8X50	1
16	90.012.50.019	0	SR. S VALC. HLAV. / ROLLER BOLT / ZYLINDERSCHRAUBE	SROUB M3X6	1
17	90.100.55.004	0	MATICE / NUT / MUTTER	MATICE _ M6	2
18	90.100.55.005	0	MATICE / NUT / MUTTER	MATICE _ M8	1
19	90.300.02.012	0	KOLIK VALC. KAL. / CYLINDRICAL PIN TEMPERED / ZYLINDERSTIFT GEHARTET	KOLIK 8X50	1
20	90.350.02.002	0	PRUZINA TALIROVA / DISC SPRING / TELLERFEDER	35,5X18,3X2,0X2,8	11
21	95.001.018	0	LOZISKO / BEARING / LAGER	6205 2RS	2
22	95.750.001	0	KROUZEK KU / KU RING / KU-RING	16x1	2
23	95.800.012	0	SEGR HRIDEL. / OUTSIDE SAFETY RING / SICHERUNGSRING AUSSEN	POJISTNY KROUZEK 25	1
24	95.801.009	0	SEGR DIRA / INSIDE SAFETY RING / SICHERUNGSRING INNEN	POJISTNY KROUZEK 52	1

Cislo Sestavy/Number of assembly/Nummer der Baugruppe; Verze (Ver.)/Version/Version; Nazev sestavy/Assembly title/Name der Baugruppe; Pozice (Poz.)/Position/Position;
Objednaci cislo/Purchase order number/Bestellnummer; Nazev polozky/Volume title/Name der Position; Rozmer/Stock size/Abmessung

7.33. Válec / Roller / Zylinder

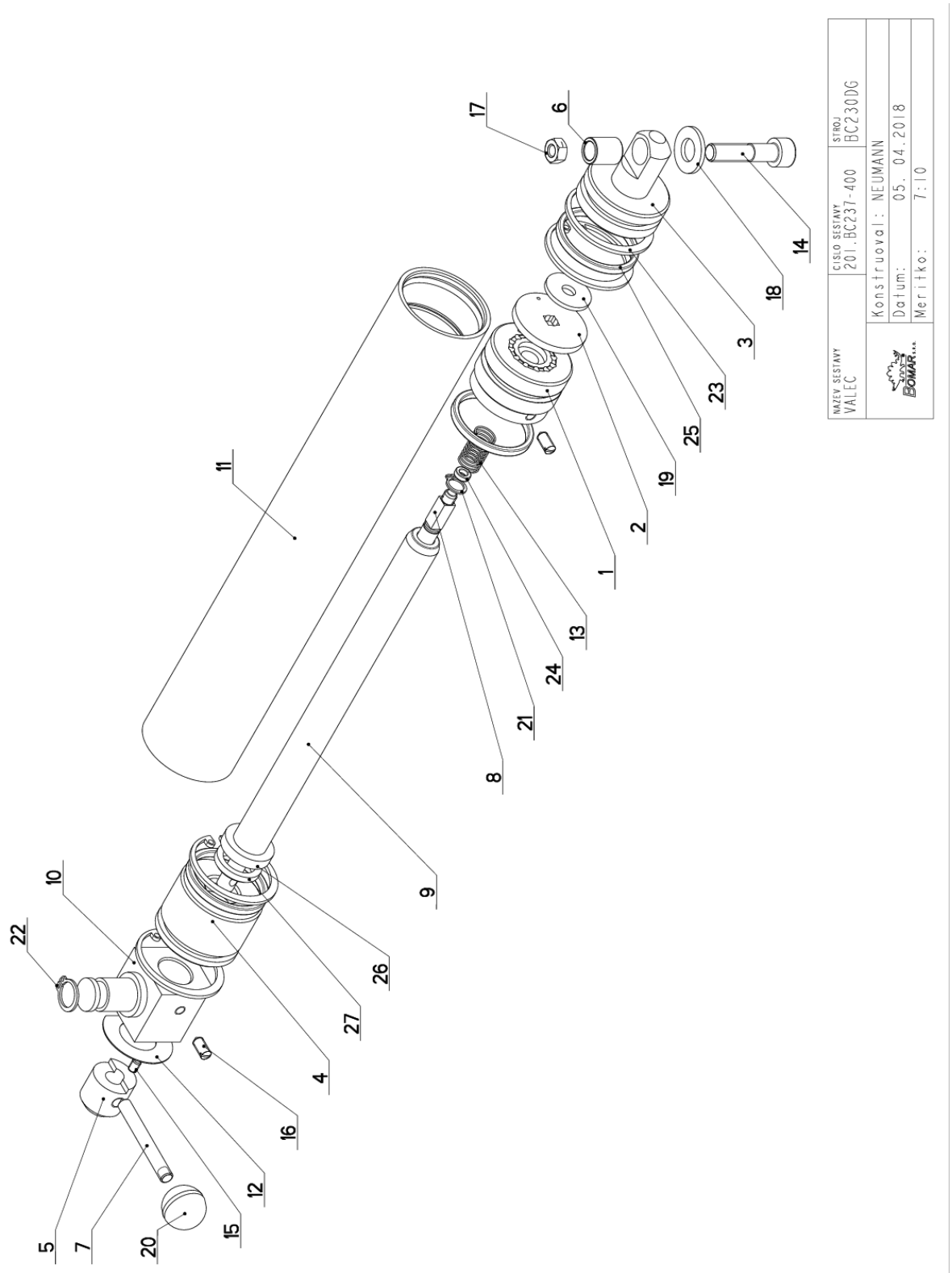

7.34. Kusovník / Piece list / Stückliste
Válec / Roller / Zylinder

Cislo Sestavy	Ver.	Nazev sestavy
201.BC237-400	0	VALEC/ROLLER/ZYLINDER

Poz.	Objednaci cislo	Ver.	Nazev polozky	Rozmer	Ks
1	30.0707-001	0	PIST / PISTON / KOLBEN	d 45	1
2	30.0707-004	0	KLAPKA / PULLEY / VENTILKLAPPE	d 35	1
3	30.0707-005	0	VIKO / COVER / DECKEL	d 40	1
4	30.0707-006	0	VIKO / COVER / DECKEL	d 45	1
5	30.0707-010	2	DORAZ / STOP PIECE / ANSCHLAG	TYC 20	1
6	30.0707-015	0	POUZDRO / SLEEVE / BÜCHSE	d 12	1
7	30.0707-016	0	SVORNIK / HINGE PIN / KLEMME	M6	1
8	30.3907-001	0	HRIDEL / SHAFT / WELLE	d 8	1
9	30.3907-002	2	PISTNICE / PISTON ROD / KOLBENSTANGE	d 16	1
10	30.3907-101	0	DRZAK / HOLDER / HALTER	HR 30x 30	1
11	30.BC237-404	0	VALEC / ROLLER / ZYLINDER	TR 45/40	1
12	31.0707-013	0	STUPNICE / SCALE / SKALA		1
13	31.0707-014	0	PRUZINA / SPRING / FEDER	0.63x10x20x9.5	1
14	90.001.25.035	0	SROUB IMBUS / ALLEN HEAD BOLT / IMBUSSCHRAUBE	M8X35	1
15	90.002.20.001	0	SROUB STAVECI / ADJUSTMENT BOLT / STELLSCHRAUBE	SROUB M4X6	1
16	90.003.20.003	0	SROUB STAVECI / ADJUSTMENT BOLT / STELLSCHRAUBE	SROUB M5X12	2
17	90.100.55.004	0	MATICE / NUT / MUTTER	MATICE _ M6	1
18	90.150.50.006	0	PODLOZKA / WASHER / UNTERLEGSCHEIBE	PODLOZKA 10,5	1
19	90.151.50.004	0	PODLOZKA / WASHER / UNTERLEGSCHEIBE	PODLOZKA 6	1
20	94.001.001	0	MADLO / HANDLE / RAIL / HANDGRIFF	M6	1
21	95.800.002	0	SEGR HRIDEL. / OUTSIDE SAFETY RING / SICHERUNGSRING AUSSEN	POJISTNY KROUZEK 8	1
22	95.800.004	0	SEGR HRIDEL. / OUTSIDE SAFETY RING / SICHERUNGSRING AUSSEN	POJISTNY KROUZEK 12	1
23	95.801.005	0	SEGR DIRA / INSIDE SAFETY RING / SICHERUNGSRING INNEN	POJISTNY KROUZEK 40	4
24	96.002.001	0	KROUZEK O DYNAMICKY / DYNAMIC O RING / O-RING DYNAMISCH	4X2	1
25	96.002.017	0	KROUZEK O DYNAMICKY / DYNAMIC O RING / O-RING DYNAMISCH	34x3 NBR 70SH	3
26	96.041.001	0	TESNENI / SEALING / DICHTUNG	d16	1
27	96.060.001	0	KROUZEK STIRACI / SCRAPER RING / ABSTREIFRING	KROUZEK STIRACI 16	1

Cislo Sestavy/Number of assembly/Nummer der Baugruppe; Verze (Ver.)/Version/Version; Nazev sestavy/Assembly title/Name der Baugruppe; Pozice (Poz.)/Position/Position;
Objednaci cislo/Purchase order number/Bestellnummer; Nazev polozky/Volume title/Name der Position; Rozmer/Stock size/Abmessung

7.35. Doraz / Stop piece / Anschlag

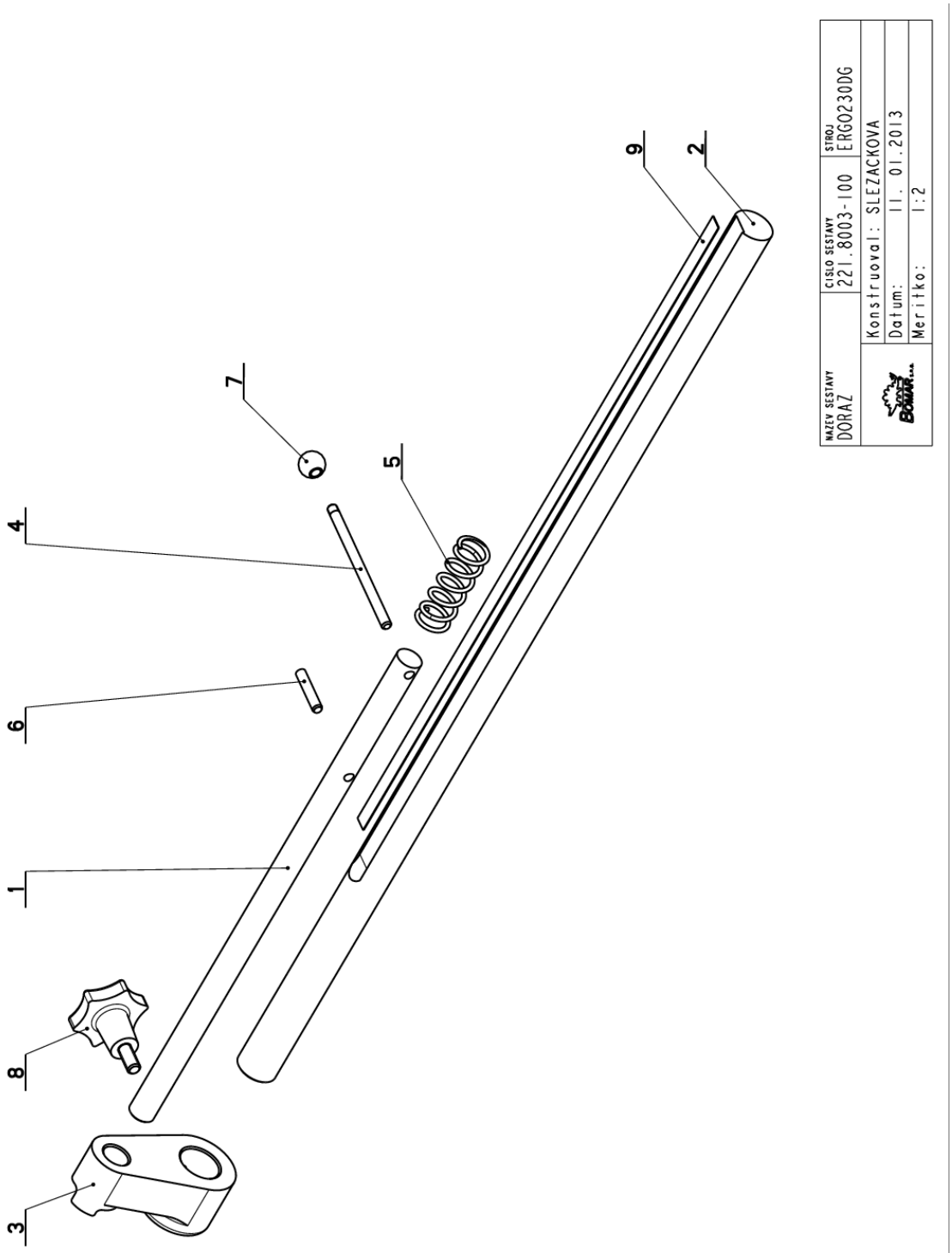

7.36. Kusovník / Piece list / Stückliste
Doraz / Stop piece / Anschlag

Cislo Sestavy	Ver.	Nazev sestavy
221.8003-100	0	DORAZ/STOP PIECE/ANSCHLAG

Poz.	Objednaci cislo	Ver.	Nazev polozky	Rozmer	Ks
1	30.0514-601	2	DORAZ / STOP PIECE / ANSCHLAG	d 16	1
2	30.0703-010	0	TYC / POLE / STANGE	d25	1
3	30.0703-013	0	TELESO DORAZU / STOP BODY / ANSCHLAGKÖRPER	ODLITEK	1
4	30.0703-016	1	PAKA / LEVER / HEBEL	d6	1
5	31.0304-013	0	PRUZINA / SPRING / FEDER	2.5x21.5x60x7	1
6	90.300.0Z.006	0	KOLIK VALC. KAL. / CYLINDRICAL PIN TEMPERED / ZYLINDERSTIFT GEHARTET	KOLIK 6X32	1
7	94.001.001	0	RUKOJET / HANDLE / GRIFF	M6 PRUMER 16	1
8	94.006.001	0	SROUB / BOLT / SCHRAUBE	M8x17	1
9	99.120.001	0	PRAVITKO / RULER / SKALENBANDMAß	0.5m	1

Cislo Sestavy/Number of assembly/Nummer der Baugruppe; Verze (Ver.)/Version/Version; Nazev sestavy/Assembly title/Name der Baugruppe; Pozice (Poz.)/Position/Position; Objednaci cislo/Purchase order number/Bestellnummer; Nazev polozky/Volume title/Name der Position; Rozmer/Stock size/Abmessung

!!! POZOR !!! Objednávejte dle skutečných součástí na stroji

!!! ACHTUNG !!! Auftrag entsprechend den tatsächlichen teile auf der maschine

!!! ATTENTION !!! Order according to the actual parts on the machine

8. Volitelné vybavení

Kostka vodicí/

Optionale Zubehör

Führungsklotz/

Optional accessories

Lead cube

8.1. Rameno / Shoulder / Sägerahmen

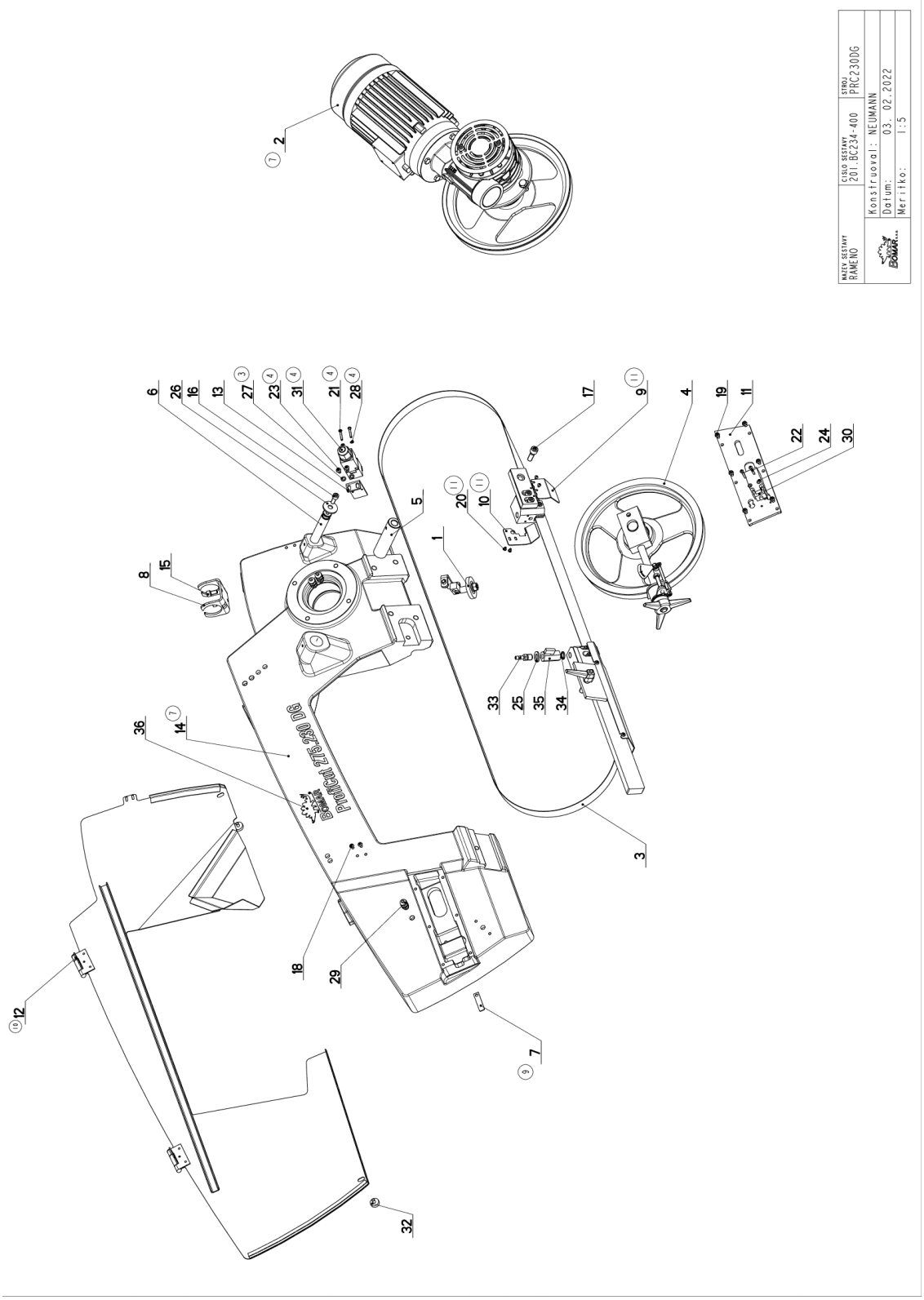

8.2. Kusovník / Piece list / Stückliste - Rameno / Shoulder / Sägerahmen

Cislo Sestavy	Ver.	Nazev sestavy
201.BC234-400	11	RAMENO/SHOULDER/SÄGERAHMEN

Poz.	Objednaci cislo	Ver.	Nazev polozky	Rozmer	Ks
1	201.BC234-060	3	KARTAC / BRUSH / BÜRSTE		1
2	201.BC235-250 (7)	1	POHON / DRIVE / ANTRIEB		1
3	201.SC234-050 (2)	3	VEDENI PASU / BELT GUIDE / SÄGEBANDFÜHRUNG		1
4	201.SC238-000	0	NAPINANI / TENSIONING / SPANNUNG		1
5	30.8004-401	1	CEP / LUG / BOLZEN	D 30	1
6	30.8004-405	0	TYC / /	TYC 20	1
7	30.ER254-002 (9)	1	PLECH / PLATE / BLECH	P 1,5x12	1
8	30.ER254-008	2	DRZAK / HOLDER / HALTER	P 4x60	1
9	30.ER254-013 (11)	0	KRYT PASU / BELT COVER / BANDABDECKUNG	P 1.5x56	1
10	30.ER254-014 (11)	1	KRYT PASU / BELT COVER / BANDABDECKUNG	P 1.5x47	1
11	30.SC234-002	1	KRYT NAPINANI / TENSIONING COVER / BANDSPANNUNGSABDECKUNG	P 6x80	1
12	30.SC234-004 (10)	1	KRYT RAMENE / SHOULDER COVER / RAHMENABDECKUNG		1
13	30.SC234-106 (3)	2	DRZAK / HOLDER / HALTER	P3x32	1
14	30.SC234-111 (7)	2	RAMENO / SAW ARM / SÄGERAHMEN	ODLITEK	1
15	90.001.25.031	0	SROUB IMBUS / ALLEN HEAD BOLT / IMBUSSCHRAUBE	8x16	2
16	90.001.25.032	0	SROUB IMBUS / ALLEN HEAD BOLT / IMBUSSCHRAUBE	8x20	1
17	90.001.25.048	0	SROUB IMBUS / ALLEN HEAD BOLT / IMBUSSCHRAUBE	M10X30	1
18	90.013.27.003	0	SROUB / BOLT / SCHRAUBE	M5X10	2
19	90.013.27.007	0	SROUB PULKULATY / HALF ROUND BOLT / HALBRUNDSCHRAUBE	M6X10	6
20	90.013.27.017 (11)	0	SROUB PULKULATY / HALF ROUND BOLT / HALBRUNDSCHRAUBE	M4x6	4
21	90.013.9Z.103 (4)	0	SROUB PULKULATY / HALF ROUND BOLT / HALBRUNDSCHRAUBE	M4x25	2
22	90.013.9Z.104 (4)	0	SROUB PULKULATY / HALF ROUND BOLT / HALBRUNDSCHRAUBE	M4x30	2
23	90.013.9Z.114 (4)	0	SROUB PULKULATY / HALF ROUND BOLT / HALBRUNDSCHRAUBE	M6X10	2
24	90.150.50.002	0	PODLOZKA / WASHER / UNTERLEGSCHEIBE	PODLOZKA 4,3	2
25	90.150.50.007	0	PODLOZKA / WASHER / UNTERLEGSCHEIBE	PODLOZKA 13	1
26	90.151.50.001	0	PODLOZKA / WASHER / UNTERLEGSCHEIBE	PODLOZKA 10	1
27	90.152.50.001 (4)	0	PODL VEJIROVA ZN / /	6.4	2
28	90.152.50.005 (4)	0	PODLOZKA VEJIROVA / /	PODLOZKA 4,3	2
29	91.070.010	0	PRUCHODKA / LEADTHROUGH / DURCHFÜHRUNG	M12x1.5 CERNA	3
30	91.173.007	0	SPINAC KONCOVY / END SWITCH / ENDSCHALTER		1
31	91.173.012	0	SPINAC KONCOVY / END SWITCH / ENDSCHALTER		1
32	94.007.002	0	SROUB / BOLT / SCHRAUBE		2
33	94.202.002 (11)	0	REDUKCE / REDUCTION / ADAPTOR / REDUKTION	GES 6/R1/4"	1
34	96.080.001	0	TESNENI / SEALING / DICHTUNG	17.8x13.5x2	1

Cislo Sestavy/Number of assembly/Nummer der Baugruppe; Verze (Ver.)/Version/Version; Nazev sestavy/Assembly title/Name der Baugruppe; Pozice (Poz.)/Position/Position; Objednaci cislo/Purchase order number/Bestellnummer; Nazev polozky/Volume title/Name der Position; Rozmer/Stock size/Abmessung

8.3. Rameno / Shoulder / Sägerahmen

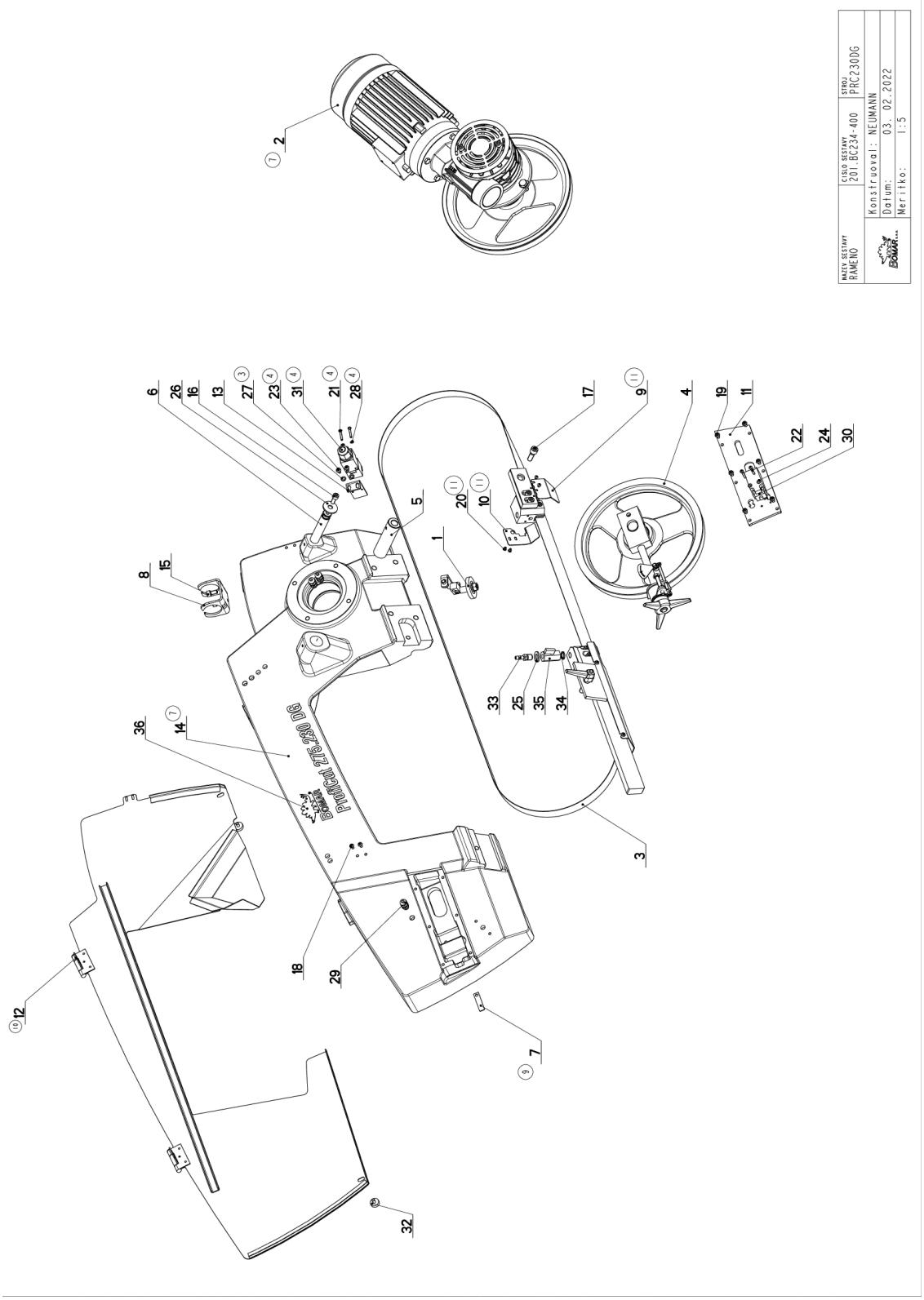

8.4. Kusovník / Piece list / Stückliste - Rameno / Shoulder / Sägerahmen

35	99.260.003	0	VENTIL / VALVE / VENTIL	1/4"	1
36	99.901.107	0	SAMOLEPKA / STICKER / AUFKLEBER		1

1. PRID. 2xSROUB M4x30 90.013.9Z.104 171/ZM298 3.9.2018 NEDUCHAL
2.ZRUS.VEDENI PASU 201.8004-430 A DANO DO VEDENI PASU 201.SC234-050. 199/ZM356 5.10.2018 NEDUCHAL
3.PRIDAN DRZAK 30.SC234-106. 164/ZM222 31.5.2019 SCERBA
4.PRID.2xSROUB M6x10 90.013.9Z.111, 2xPODLOZKA 6,4 90.152.50.001,2xPODLOZKA 4,3 90.152.50.005,ZRUS.SROUB M4x30 90.013.9Z.104 A NAHR.M4x25 90.013.9Z.103. 164/ZM399 30.9.2019 SZAABARI
5.ZRUSEN POHON 201.8004-530 A NAHR.201.BC235-050. 318/ZM447 11.11.2019 SLEZACKOVA
6.ZRUSEN KRYT PASU 30.0704-041 A NAHR.30.0704-038. 361/ZM490 13.1.22019 KOSYK
7.ZRUS.POHON 201.BC235-050 A NAHR.201.BC235-250,ZRUS.RAMENO 30.SC234-101 A NAHR.30.SC234-111.060/ZM078 14.2.2020 SLEZACKOVA
8.ZRUS.KRYT RAMENE 30.SC234-004 A NAHR.30.BC234-304,PRID.KRYT KARTACKU 30.BC234-305. 187/ZM251 24.6.2020 SLEZACKOVA
9.PRIDAN PLECH 30.ER254-002. 213/ZM307 3.9.2020 SLEZACKOVA
10.ZRUS.KRYT RAMENE 30.BC234-304 A NAHR.30.SC234-004,ZRUS.KRYT 30.BC234-305. 273/ZM316 14.10.2020 SLEZACKOVA
11.ZRUS.KRYT 30.0704-038 A NAHR.30.ER254-013;ZRUS.KRYT 30.ER254-014;PRID.2xSROUB M4x6(90.013.27..017);ZRUS.1xSROUB M8x12 (90.013.27.011);ZRUS.DRZAK 30.1814-011;ZRUS.1xREDUKCE 94.202.002;ZM.POLOHY VENTILU 96.080.001. 016/ZM015 3.2.2022 SLEZACKOVA

Cislo Sestavy/Number of assembly/Nummer der Baugruppe; Verze (Ver.)/Version/Version; Nazev sestavy/Assembly title/Name der Baugruppe; Pozice (Poz.)/Position/Position;
Objednaci cislo/Purchase order number/Bestellnummer; Nazev polozky/Volume title/Name der Position; Rozmer/Stock size/Abmessung

8.5. Vedení pásu / Belt guide / Sägebandführung

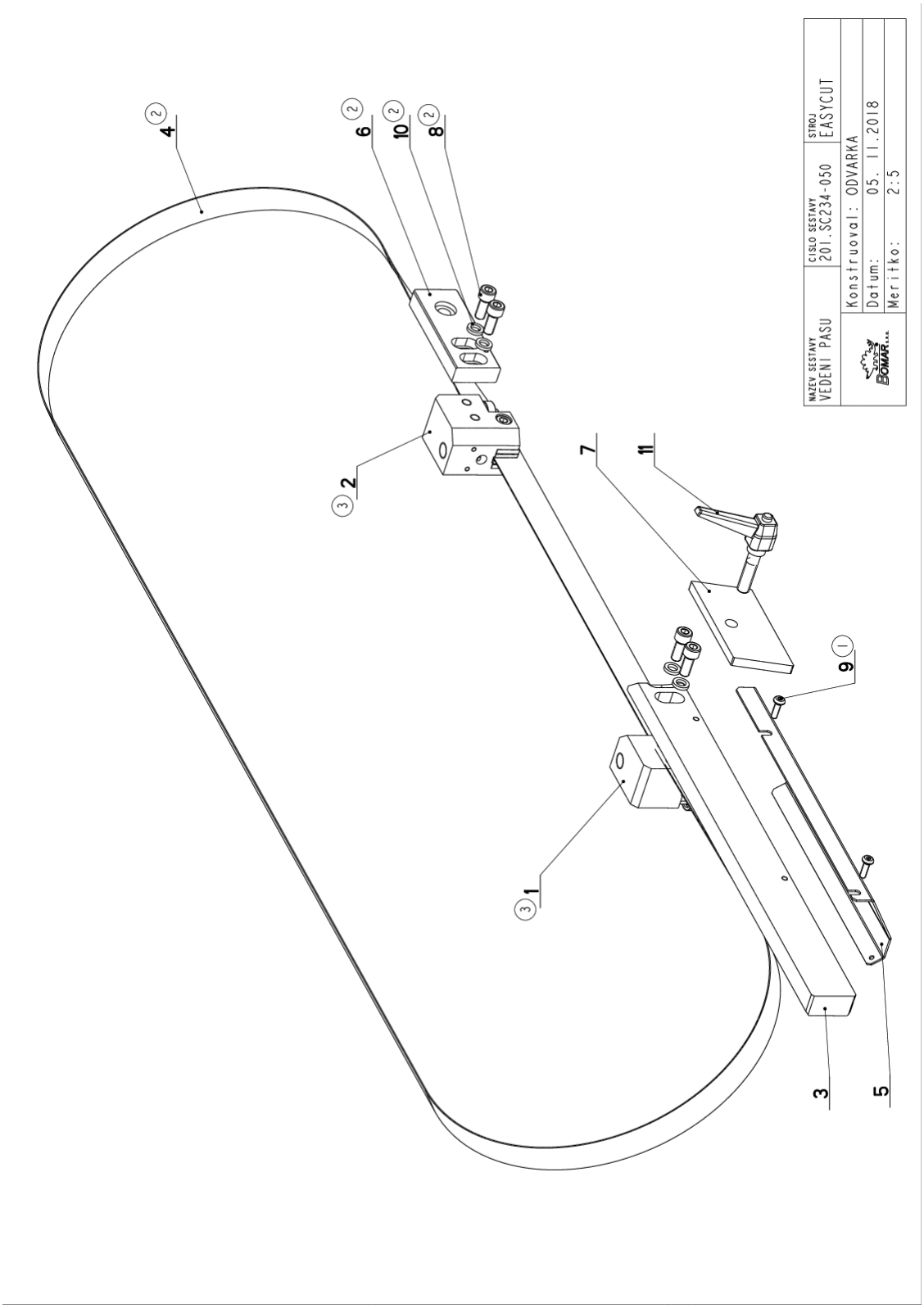

8.6. Kusovník / Piece list / Stückliste - Vedení pásu / Belt guide / Sägebandführung

Cislo Sestavy	Ver.	Nazev sestavy
201.SC234-050	3	VEDENI PASU/BELT GUIDE/SÄGEBANDFÜHRUNG

Poz.	Objednaci cislo	Ver.	Nazev polozky	Rozmer	Ks
1	201.0110-100 (3)	2	KOSTKA VODICI / LEAD CUBE / FÜHRUNGSKLOTZ		1
2	201.0110-200 (3)	2	KOSTKA VODICI / LEAD CUBE / FÜHRUNGSKLOTZ		1
3	30.0104-015	7	LISTA / TRIM / LEISTE	HR 40x20	1
4	30.0504-912 (2)	0	PAS PILOVY / SAW BELT / SÄGEBAND	2720x0,9x25(27)	1
5	30.0704-221	0	KRYT PASU / BELT COVER / BANDABDECKUNG	P 1,5x98	1
6	30.8004-431 (2)	4	LISTA / TRIM / LEISTE	HR 40x15	1
7	30.SC234-051	2	UPINKA / FASTENER / SPANNEISEN	P 8x50	1
8	90.001.25.032 (2)	0	SROUB IMBUS / ALLEN HEAD BOLT / IMBUSSCHRAUBE	8x20	4
9	90.013.27.005 (1)	0	SROUB PULKULATY / HALF ROUND BOLT / HALBRUNDSCHRAUBE	M5X16	2
10	90.163.00.001 (2)	0	PODLOZKA / WASHER / UNTERLEGSCHEIBE	M8 NORD-LOCK	4
11	94.008.013	0	PAKA UPINACI / ATTACHMENT LEVER / SPANNHEBEL	M10	1

1.ZRUSEN SROUB M5x16 90.001.25.009 A NAHR.M5x16 90.013.27.005 021/ZM100 21.3.2017 SLEZACKOVA
2.ZRUS.PODDILY KOSTKY A NAHR.SESTAVOU 201.0510-500,PRID.KOSTKA 201.0510-610,LISTA 30.8004-431 2xSROUB 90.001.25.032, 2xPODLOZKA 90.163.00.001,PRID.PAS 30.0504-912.199/ZM356 22.10.2018 SZABARI
3.ZRUS.KOSTKA 201.0510-500 A NAHR.201.0110-100;ZRUS.KOSTKA 201.00510-600 A NAHR. 201.0110-200.002/ZM002 5.1.2022 SLEZACKOVA

Cislo Sestavy/Number of assembly/Nummer der Baugruppe; Verze (Ver.)/Version/Version; Nazev sestavy/Assembly title/Name der Baugruppe; Pozice (Poz.)/Position/Position; Objednaci cislo/Purchase order number/Bestellnummer; Nazev polozky/Volume title/Name der Position; Rozmer/Stock size/Abmessung

8.7. Kostka vodíci / Lead cube / Führungsklotz

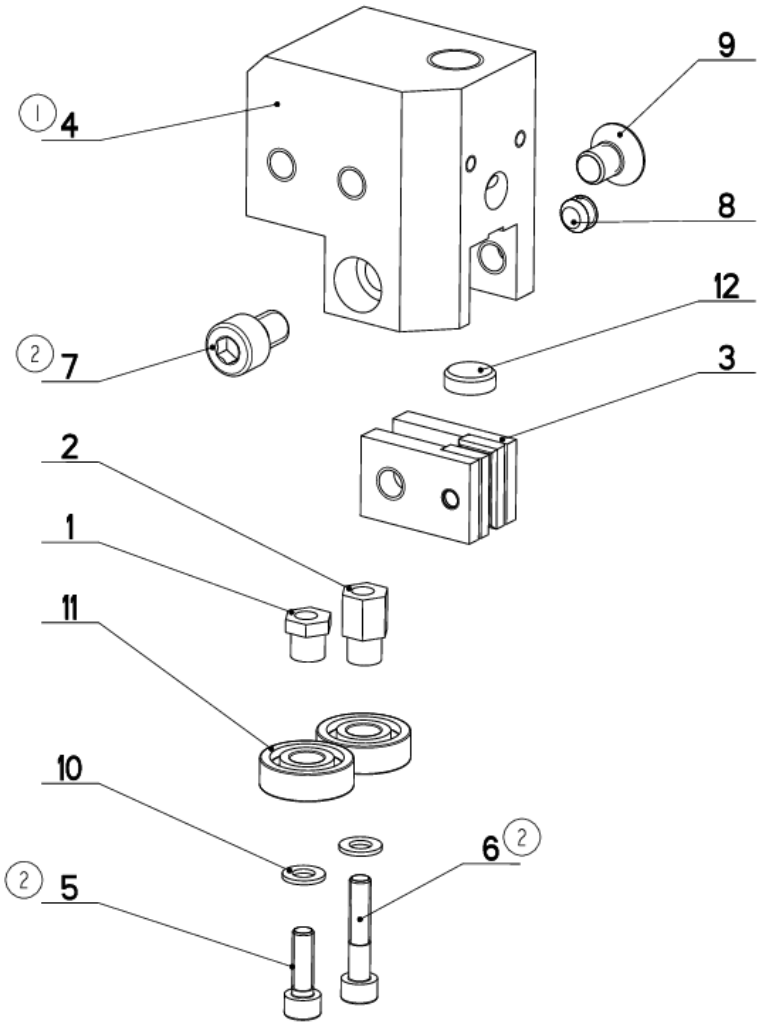

NAZEV SESTAVY	CISLO SESTAVY	STROJ
KOSTKA VODICI	201.0110-100	STG-240

BOMAR s.r.o.	Konstruoval:
	Datum: 02. 10.2019
	Meritko: 4:5

8.8. Kusovník / Piece list / Stückliste - Kostka vodící / Lead cube / Führungsklotz

Cislo Sestavy	Ver.	Nazev sestavy
201.0110-100	2	KOSTKA VODICI/LEAD CUBE/FÜHRUNGSKLOTZ

Poz.	Objednaci cislo	Ver.	Nazev polozky	Rozmer	Ks
1	30.0104-018	0	EXCENTR / CAM / EXZENTER	SK10	1
2	30.0104-019	0	EXCENTR / CAM / EXZENTER	SK10	1
3	30.0104-021 (1)	0	DRZAK / HOLDER / HALTER		2
4	30.0104-032 (1)	2	KOSTKA VODICI / LEAD CUBE / FÜHRUNGSKLOTZ	TYC 60x40	1
5	90.001.25.009 (2)	0	SROUB IMBUS / ALLEN HEAD BOLT / IMBUSSCHRAUBE	M5X16	1
6	90.001.25.011 (2)	0	SROUB IMBUS / ALLEN HEAD BOLT / IMBUSSCHRAUBE	M5X25	1
7	90.001.25.029 (2)	0	SROUB / /	M8x12.00	1
8	90.002.2D.009	0	SROUB STAVECI / ADJUSTMENT BOLT / STELLSCHRAUBE	SROUB M8X6	1
9	90.011.27.007	0	ZAPUSTNY IMBUS / COUNTERSINK BOLT / SENKSCHRAUBE	SROUB M8X12	1
10	90.150.50.003	0	PODLOZKA / WASHER / UNTERLEGSCHEIBE	PODLOZKA 5,3	2
11	95.001.001	0	LOZISKO / BEARING / LAGER	608 2RS	2
12	99.040.002	0	TVRDOKOV / HARD METAL / HM-SEGMENT	d 12	1

1.ZRUS.KOSTKA 30.0104-017 A NAHR.30.0104-032,ZRUS.DRZAK 30.0104-020 A NAHR. 30.0104-021. 297/272 12.8.2008 KRPEC

2.ZRUS 90.005.55.005 A NAHR.90.001.25.011; ZRUS 90.005.55.003 A NAHR.90.001.25.009;ZRUS 90.001.25.030 A NAHR.90.001.25.029;
260/ZM432 29.11.2018 SCERBA

Cislo Sestavy/Number of assembly/Nummer der Baugruppe; Verze (Ver.)/Version/Version; Nazev sestavy/Assembly title/Name der Baugruppe; Pozice (Poz.)/Position/Position;
Objednaci cislo/Purchase order number/Bestellnummer; Nazev polozky/Volume title/Name der Position; Rozmer/Stock size/Abmessung

8.9. Kostka vodíci / Lead cube / Führungsklotz

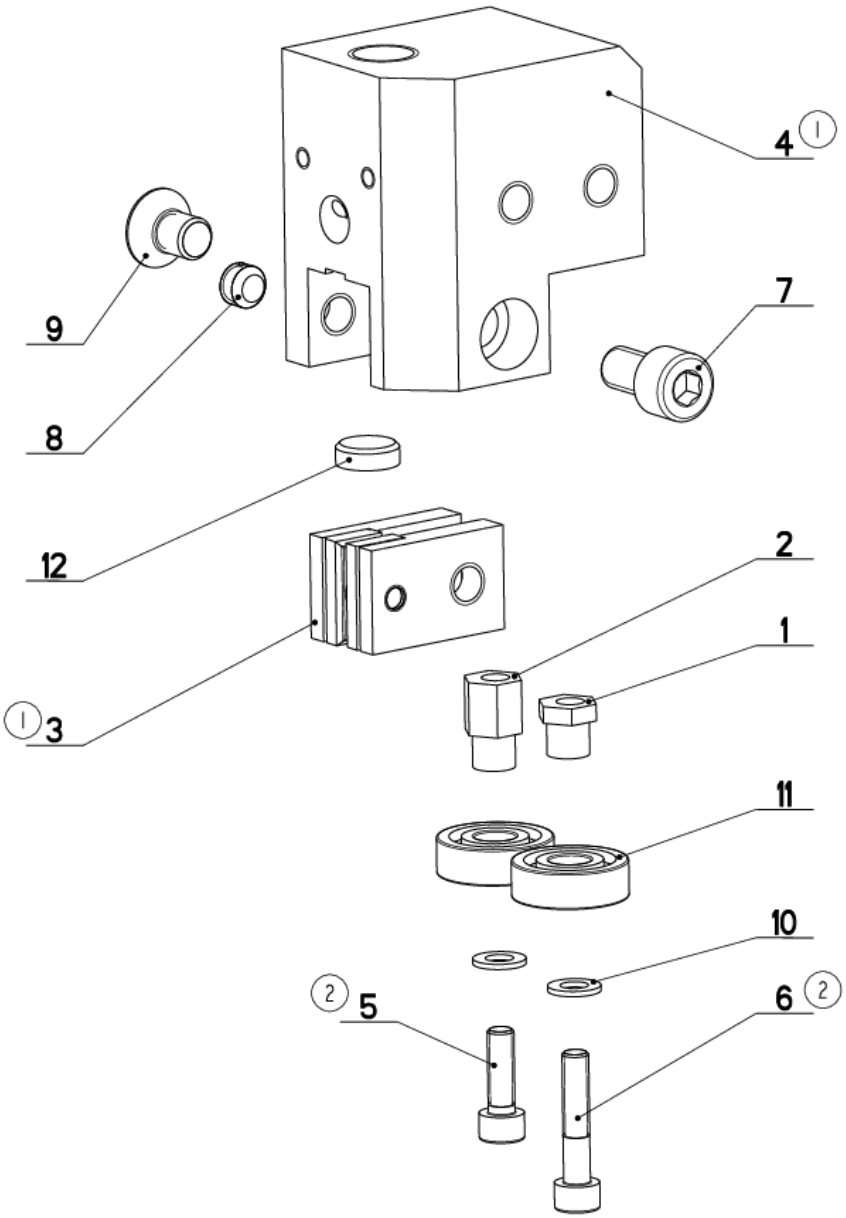

281.071

NAZEV SESTAVY	CISLO SESTAVY	STROJ
KOSTKA VODICI	201.0110-200	ERGO250DDG

BOMAR	Konstruoval:
	Datum: 29. 07.2020
	Meritko: 1:1

8.10. Kusovník / Piece list / Stückliste - Kostka vodící / Lead cube / Führungsklotz

Cislo Sestavy	Ver.	Nazev sestavy
201.0110-200	2	KOSTKA VODICI/LEAD CUBE/FÜHRUNGSKLOTZ

Poz.	Objednaci cislo	Ver.	Nazev polozky	Rozmer	Ks
1	30.0104-018	0	EXCENTR / CAM / EXZENTER	SK10	1
2	30.0104-019	0	EXCENTR / CAM / EXZENTER	SK10	1
3	30.0104-021 (1)	0	DRZAK / HOLDER / HALTER		2
4	30.0104-031 (1)	2	KOSTKA VODICI / LEAD CUBE / FÜHRUNGSKLOTZ	TYC 60x40	1
5	90.001.25.009 (2)	0	SROUB IMBUS / ALLEN HEAD BOLT / IMBUSSCHRAUBE	M5X16	1
6	90.001.25.011 (2)	0	SROUB IMBUS / ALLEN HEAD BOLT / IMBUSSCHRAUBE	M5X25	1
7	90.001.25.030	0	SROUB IMBUS / ALLEN HEAD BOLT / IMBUSSCHRAUBE	M8X14	1
8	90.002.2D.009	0	SROUB STAVECI / ADJUSTMENT BOLT / STELLSCHRAUBE	SROUB M8X6	1
9	90.011.27.007	0	ZAPUSTNY IMBUS / COUNTERSINK BOLT / SENKSCHRAUBE	SROUB M8X12	1
10	90.150.50.003	0	PODLOZKA / WASHER / UNTERLEGSCHEIBE	PODLOZKA 5,3	2
11	95.001.001	0	LOZISKO / BEARING / LAGER	608 2RS	2
12	99.040.002	0	TVRDOKOV / HARD METAL / HM-SEGMENT	d 12	1

1 ZRUS.SOUCAST 30.0104-020 NAHRAZENA SOUC.30.0104-021,ZRUS.SOUCAST 30.0104-016 NAHRAZENA SOUC.30.0104-031.
297/ZM272 12.8.2008 KRPEC
2.ZRUS.6HR SROUB M5x25 (90.005.55.005) A NAHR.IMBUS SROUBEM M5x25 (90.001.25.011),ZRUS.6HR SROUB M5x16(90.005.55.003)
A NAHR.IMBUS SROUBEM M5x16(90.001.25.009). 191/ZM281 29.7.2020 SLEZACKOVA

Cislo Sestavy/Number of assembly/Nummer der Baugruppe; Verze (Ver.)/Version/Version; Nazev sestavy/Assembly title/Name der Baugruppe; Pozice (Poz.)/Position/Position;
Objednaci cislo/Purchase order number/Bestellnummer; Nazev polozky/Volume title/Name der Position; Rozmer/Stock size/Abmessung