Series**Proline**

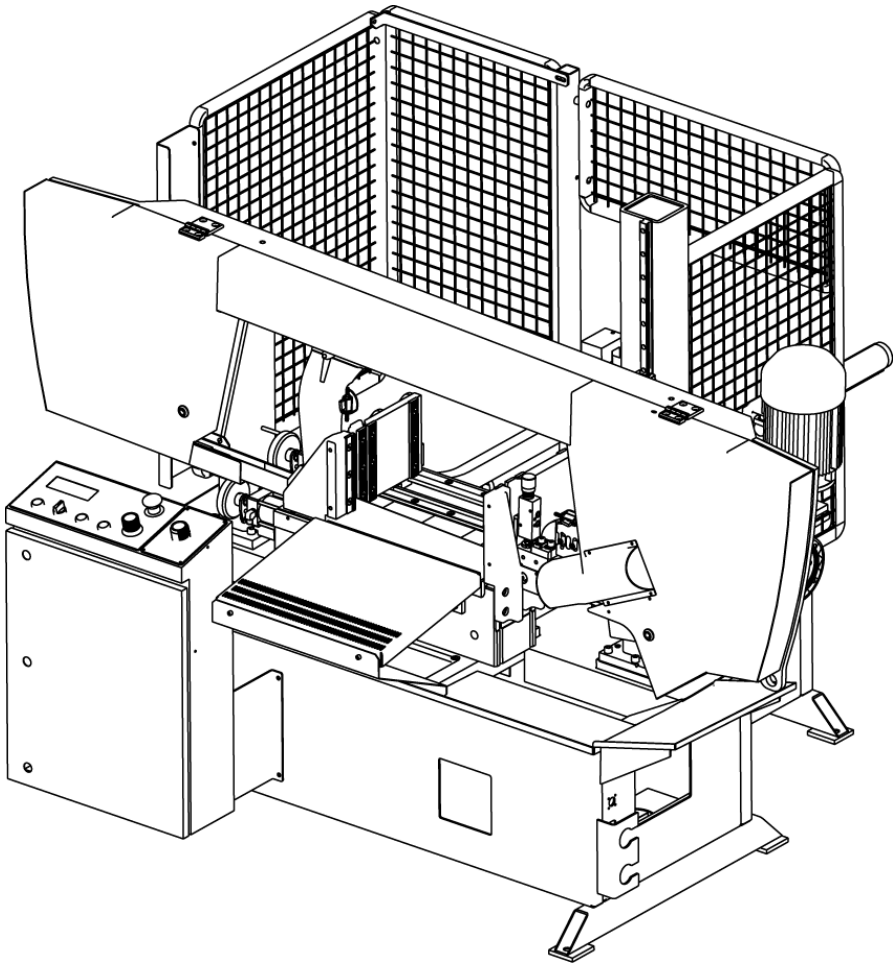

Proline 320.280 ANC

Operating instructions

Before transporting and using the machine, please read the instructions thoroughly!

Seriovéčíslo / SerienNummer / Serial Number _____

Service and information

Your BOMAR dealer:

Direct BOMAR contact:

BOMAR spol. s r.o.
Těžební 1236/1
62700 Brno
Czech Republic, EU

telefon: +420 – 533 426 100
fax: +420 – 533 426 109
e-mail: info@bomar.cz
www: http://www.bomar.cz

We are available:

Mondays to Fridays $7^{00} – 16^{00}$

Version:

1.04 / Jan. 2014

rev. 1

BOMAR, spol. sr.o. © – Subject to modifications and amendments.

EC Declaration of Conformity

1) We

BOMAR, spol. s r.o.
Těžební 1236/1
627 00 Brno, The Czech Republic
Id.no: 48908827

declare herewith,

that the following designated device based on its conception and construction as well as the design launched by us meets the relevant basic safety requirements of the decrees of the government. In the event of any device modification not approved by us this declaration shall lose its validity.

Name: **Band Saw**

Type range: **Proline 320.280 ANC**

Serial number: **……..**

Manufacturer: **BOMAR, spol. s r.o., Těžební 1236/1, 627 00 Brno**

Product data
Determination: for cross dividing and cutting of rolled and towed bars and profiles made of steel, stainless steel, non-ferrous metals and plastics.

Description: stand, table, cutting unit with the saw band and drive, clamping device, cooling system, el. switch board with control panel.
Hydraulic *YES* ☒ *NO* ☐ Control system *YES* ☒ NO ☐

Technical data: Cutting rate 20–120 m.min^{-1}, Cutting angle 0°
Total dimensions in mm (l×w×h) 1950×1950×2000
Supply voltage 400 V TN-C-S, 400 V TN-C or 230 V TN-C
Total power requirement 4 kVA, weight 1000 kg

The applied decrees of governments: **No. 176/2008 Coll.** (Directive 2006/42/EC)
No. 616/2006 Coll. (Directive 2004/108/EC)
No. 17/2003 Coll. (Directive 2006/95/EC)

The applied harmonized standards,
National standards and technical specifications: ČSN EN ISO 12 100-2:2004, ČSN EN 13 898+A1:2009, ČSN EN ISO 13857:2008, ČSN EN 982+A1:2008, ČSN EN 61000-6-2 ed. 2:2007, ČSN EN 61000-6-4:2002 ed.2:2007, ČSN EN 60204-1 ed.2:2007

The product is safe on condition of the common and determined usage.

The conformity judging was performed according to §12, par. 3, let. a), of the Law no. 22/1997 Coll. as amended
2) [2)] The declaration of conformity was carried out in the cooperation with the TÜV SÜD Czech s.r.o, Novodvorská 994, 142 21 Prague 4 – Czech Republic, Identification number: 63987121 - Inspection body no. 4002

The inspection certificate no . 04.863.175 was issued.

BOMAR, spol. s r.o.
Těžební 1236/1, 627 00 Brno
Czech Republic
IČO: 48908827
DIČ: CZ48908827

Alfred Pichlmann, Managing Director

Point of issue, datum	Name and function of the responsible subject	Signature

1] Name, address and identification number of the subject issuing the conformity declaration (producer of importer)
2) The authorized or accredited body co-operating on the conformity judging

!	If the equipment is installed without safety equipment offered by BOMAR, spol. s ro or its agents and used by the customer (or buyer) then EC declaration loses validity. EC Declaration of conformity is valid only if customer (buyer) installed the BOMAR safety equipment with the machine or with some other with equivalent safety device in accordance with current applicable regulations and standards. All machine elements and components that were built into the device by BOMAR, spol. s ro have been declared "identical" to a safety device, as offered by BOMAR, spol. s ro or its agents.

Content

1. SAFETY NOTES....7

1.1. Machine determination....9
1.2. Protective suit and personal safety....9
1.3. Safety notes for machine operator....10
1.4. Safety notes for the servicing and repairs....10
1.5. Safety notes for the servicing and repairs on hydraulic unit....11
1.6. Safety machine accessories....11
1.6.1. Total Stop....11
1.6.2. Arm covers....11
1.6.3. Saw band stretching and rupture inspection....12
1.6.4. Protective fencing....12
1.6.5. Band saw cover....12
1.6.6. Brush cover....13
1.7. Safety notes for the cooling....13
1.7.1. Instructions for first help....13
1.8. Umístěníštítkustroje / Maschinenschild position / Position of machine label....13
1.9. Umístěníbezpečnostníchznaček / Verteilung der Sicherheitszeichen / Position of safety symbols....14

2. MACHINE DOCUMENTATION....15

2.1. Technická data / TechnischeDaten / Technical data....17
2.2. Rozměrovéschéma / Aufstellzeichnung / Installation diagram....18
2.3. Popis / Beschreibung / Description....19
2.4. Transportation and stocking....20
2.4.1. Conditions for transportation and stocking....20
2.4.2. Transport and stocking preparations....20
2.4.3. Transport and stocking....20
2.4.4. Transportníschéma / Transport schema / Transport....21
2.5. Activation....22
2.5.1. Machine working conditions....22
2.6. Band saw unpacking and assembling....22
2.6.1. Machine installing and levelling....22
2.6.2. Machine disposal after lifetime....22
2.6.3. First run of the power pack....23
2.6.4. Filling the reservoir with hydraulic oil....23
2.6.5. Kotevní plan / Verankerungsplan / Grounding plan....24
2.7. Electrical connection....25
2.7.1. Check the direction of the saw band....25
2.7.2. Check machine connection into electrical network....25
2.8. Filling of the cooling system....26
2.9. Check machine function....26
2.10. Saw band....26
2.10.1. Saw band size....26
2.10.2. Selection of the saw band tooth system....26
2.10.3. Saw band running-in....27
2.10.4. Tables for teeth selection....28

3. MACHINE CONTROL....29

3.1. Starting the band saw....31
3.2. Machine referring....31
3.3. Control panel....33
3.4. Machine control in manual mode....35
3.5. Machine control in automatic mode....35
3.5.1. Cycle breaking....37
3.6. Machine setup....38
3.6.1. SETUP....38
3.6.2. SERVIS (password)....39
3.7. Error messages....41
3.7.1. Adjusting band guides....41
3.7.2. Cutting speed adjusting....42
3.7.3. Adjustment of pressure to the cut....42
3.7.4. Speed adjustment of the arm lowering....42
3.7.5. Brush adjustment....42
3.8. Material insertion....43
3.8.1. Handling agent selection....43
3.8.2. Insertion....43
3.8.3. Bundle material cutting....43
3.8.4. Supportingroller....44

4. MACHINE SERVICE....45

4.1. Saw band dismantling....47
4.2. Saw band instalation....47
4.3. Saw band stretching and inspection....48
4.3.1. Saw band stretching....48

4.4. Saw band run adjustment on stretching wheel....48
4.4.1. Saw band run inspection....48
4.4.2. Saw band setting....49
4.5. Saw frame lower stop position adjustment....49
4.6. Limit switch of the saw frame lower position adjustment....50
4.6.1. Check setting....50
4.6.2. Limit switch setting....50
4.7. Cooling agents and chips disposal....50
4.7.1. Coolant device inspection....50
4.7.2. Chips disposal....51
4.8. Hydraulic, Greases and oils....51
4.8.1. Gearbox oils....51
4.8.2. Lubricant greases....52
4.8.3. Lubrication....53
4.8.4. Hydraulic oils....53
4.8.5. Hydraulic unit service....54
4.9. Machine cleaning....54
4.10. Worn pieces replacement....55
4.10.1. Hard metal guides replacement....55
4.10.2. Round brush replacement....55
4.10.3. Saw band guiding rollers replacement....56
4.10.4. Stretching wheel replacement....57
4.10.5. Driving wheel replacement....59
4.10.6. Cooling pump replacement....60

5. TROUBLESHOOTING....63

5.1. Mechanical problems....65
5.2. Electric and hydraulic problems....67
5.3. Hydraulic problems....68

6. SCHEMATICS....71

6.1. Elektrické schéma / Elektroschema / Wiring diagrams – 3×400 V, PE+N, 50 Hz....73
6.2. Elektrické schéma / Elektroschema / Wiring diagrams – 3×400 V, PE, 50 Hz....92
6.3. Elektrické schéma / Elektroschema / Wiring diagrams – 3×230 V, PE, 50 Hz....111
6.4. Hydraulické schéma / Hydraulikschema / Hydraulic diagram....130

7. DRAWINGASSEMBLIESFORSPAREPARTSORDER 133

7.1. Proline 320.280 ANC- 1....134
7.2. Kusovník / Stückliste / Piece list – Proline 320.280 ANC - 1....135
7.3. Proline 320.280 ANC- 2....136
7.4. Kusovník / Stückliste / Piece list – Proline 320.280 ANC - 2....137
7.5. Rameno / Sägerahmen / Sawarm1....138
7.6. Kusovník / Stückliste / Piece list – Rameno / Sägerahmen / Sawarm 1....139
7.7. Rameno / Sägerahmen / Sawarm 2....140
7.8. Kusovník / Stückliste / Piece list – Rameno / Sägerahmen / Sawarm 2....141
7.9. Napínání / Spannung / Tensioning....142
7.10. Kusovník / Stückliste / Piece list – Napínání / Spannung / Tensioning....143
7.11. Vedení pásu / Sägebandführung / Beltguide....144
7.12. Kusovník / Stückliste / Piece list – Vedení pásu / Sägebandführung / Beltguide....145
7.13. Vodící kostka / Führungsklotz / Guidingcube1....146
7.14. Kusovník / Stückliste / Piece list – Vodící kostka / Führungsklotz / Guidingcube1....147
7.15. Vodící kostka / Führungsklotz / Guidingcube2....148
7.16. Kusovník / Stückliste / Piece list – Vodící kostka / Führungsklotz / Guidingcube2....149
7.17. Pohon / Antrieb / Drive....150
7.18. Kusovník / Stückliste / Piece list – Pohon / Antrieb / Drive....151
7.19. Svěrák / Schraubstock / Vice....152
7.20. Kusovník / Stückliste / Piece list – Svěrák / Schraubstock / Vice....153
7.21. Podavač / Vorschub / Feeder....154
7.22. Kusovník / Stückliste / Piece list – Podavač / Vorschub / Feeder....155
7.23. Válec / Zylinder / Cylinder 1....156
7.24. Kusovník / Stückliste / Piece list – Válec / Zylinder / Cylinder 1....157
7.25. Válec / Zylinder / Cylinder 2....158
7.26. Kusovník / Stückliste / Piece list – Válec / Zylinder / Cylinder 2....159
7.27. Podstavec / Untersatz / Base....160
7.28. Kusovník / Stückliste / Piece list – Podstavec / Untersatz / Base....161
7.29. Ovládací panel / Bedienpult / Control panel....162
7.30. Kusovník / Stückliste / Piece list – Ovládací panel / Bedienpult / Control panel....163
7.31. Válec zvedací / Hebezylinder / Lifting cylinder....164
7.32. Kusovník / Stückliste / Piece list – Válec zvedací / Hebezylinder / Lifting cylinder....165
7.33. Konzola / Konsole / Console....166
7.34. Sloup / Säule / Pole 1....167
7.35. Sloup / Säule / Pole 2....168
7.36. Kusovník / Stückliste / Piece list –....169
Sloup / Säule / Pole 2....169

1. Safety notes

The operating instructions must be read by the person, who keeps in touch with the machine before transportation, installation, using, servicing, reparation, stocking or removal!

The operating instructions include relevant information. The operator must familiarise himself with the install and operation, safety notes and machine servicing, because reliability and service life must be reached. The operating instructions must avoid risks, which are linked to work on the machine. Before transporting and using of the machine, please read the instructions thoroughly!

Attention!
The operating instructions must be available at the machine!
Keep the operating instructions in good condition!

1.1. Machine determination

The band saw**Proline 320.280 ANC**is determined for cutting and shortening of rolled bars and drawn bars and profiles from steels, stainless steels, non-ferrous metals and plastics **without angle cutting**.

Combustible materials are excluded for cutting! Any other usage and operation outside this range are unauthorized and the manufacturer/supplier does not accept any responsibility for any damages resulting from such misuse. **The operator has full responsibility!**

The machine is equipped with safety and protective guarding for operator and machine protection. Nevertheless, this safety and protective guarding cannot prevent injury. Service personnel must read this chapter and comprehend it, before he starts to work on the machine. **Always keep instructions about work safety!** Service personnel must take into account other aspects of the risk, which refer to the ambient conditions and the material.

Attention!
Consider the safety signs on the machine. Do not remove or damage them!

1.2. Protective suit and personal safety

Wear tight fitting overalls! Loose fitting clothes may be caught with machine parts and cause serious injury.

Wear protective gloves! Material cuts and saw band have sharp edges and may cause serious injuries.

Attention!
Gloves you can use only at working material replacement (saw band)! The machine and accessories must be inactive!
If the machine is running, you must not wear gloves! It is dangerous, because some parts of the machine can catch gloves!

Wear protective shoes with non-skid soles! The unsuitable shoes may cause balance loss and following injury. Falling work pieces may cause serious injuries too.

Wear protective goggles! Chips and cooling liquid may damage your eyes.

Always wear ear protections! Most of the machines emit up to 80 dB and may damage your hearing.

Do not wear jewellery and always tie back long hair! Moving machine parts can catch jewellery or loose hair and may cause serious injuries.

Operate the machine only when you are fit enough to work. Illnesses or injuries diminish concentration. Avoid machine work, which may compromise the safety of you and your colleagues!

1.3. Safety notes for machine operator

Attention!
Machine can be operated by person older than 18 years!
Machine can be operated only person physically and mentally fit for this activity

Only one person can operate machine. Machine operator is responsible for presence of other persons by the machine.

Keep instructions and orders about work safety!
Read the operating instructions, before you start to work on the machine! Keep the operating instructions in good condition!

Close covers before the machine starting and check, if the covers are not damaged. Damaged covers must be repaired or changed. Do not start the machine, if the cover is removed! Check, if the electric cables are not damaged.

Attention!
Do not connect the machine to electricity if the covers are removed. Do not touch the electrical equipment.

- Do not hold the material for clamping to the vice and for cutting!
- Do not operate with the buttons and the switches on the control panel, when you have gloves!
- For machine starting take care, that there is nobody in the working area of the machine (it means in the working area of the vice, the saw band, the saw arm etc.).
- In no circumstances, touch the rotating elements.
- Work on the machine only when the machine is in good condition!
- Check at least once in a shift, if the machine is not damaged. If the machine is damaged, you must bring the machine in order and you must inform your superior!
- Keep your working area clean! Ensure sufficient lighting in the working area.
- Take off the spilt water or the oil from the floor and dry it.Do not touch the cooling liquid with bare hands! Do not set the nozzle of the cooling liquid, when the machine is started on
- Do not remove the chips from the working area of the machine, when the machine is started on!
- Do not use the compressed air for the machine cleaning or for the chips removing!
- Use the protective instruments for chips removal!

1.4. Safety notes for the servicing and repairs

Attention!
Only a qualified professional can carry out the servicing and repairs of the electric equipment! Take special care during the work with electrical equipment. High voltage shock can have fatal consequences! Always keep notes about work safety! Otherwise, there is possibility of heavy injury!

Switch off the main switch and lock it, before you start service work! Otherwise, there is possibility of hazardous machine starting.

Only qualified person can do the servicing and repairs. For parts changing, use only parts, which are identical with the originals. Otherwise, there is possibility of health hazard. Use only recommended type of the hydraulic oils and oils and lubricants!

Do not remove or do not lock the limit switches or safety equipments! Any use of the saw, accessories or machine parts other than that intended by the BOMAR, spol. sr.o. company is not permitted. The guarantee on this product will be afterward lost and BOMAR, spol. sr.o. takes no responsibility for caused damages.

1.5. Safety notes for the servicing and repairs on hydraulic unit

Compliance with the principles of cleanliness is basic requirement for trouble-free operation of hydraulic equipment. Hydraulic components are products made with high accuracy, and any contamination leads to a reduction lifetime or even malfunction. The consequences are very difficult to remove and expensive.

Always use clean tools. Parts and fasteners, which are part of a hydraulic circuit, never put away the dirty surface. The best cleaning agent is crepe paper, because the fibers of the cleaning cloths can also cause malfunction.

Protective cap from the threaded chamber remove just before the assembly of the unit.

Hoses and pipes before mounting flush with gasoline or other cleaning agent and blow compressed air.

All fittings must be properly tightened. However, do not raw power.

1.6. Safety machine accessories

The machine is equipped with safety accessories. It protects the operator from injuries and the machine before damage. The safety accessories are blocking accessories, emergency switches and covers. Check once in a week the function of the safety accessories. If the safety accessories are functionless, you must stop work and repair or change the safety accessories.

Enhanced risk!
Do not come into or intervene in the cutting area.Otherwise, there is possibility of heavy injury.

1.6.1. Total Stop

TOTAL STOP button is used for emergency switching – off the machine in case defect or health hazard. By pressing **TOTAL STOP** button is interrupted the supply of the electrical power.

If any damages or fault appears, immediately press TOTAL STOP button! Release the pressing button is possible by twisting of the upper part of the button.

1.6.2. Arm covers

If the cover is opened during operation, the limit switch is opened and the band saw is stopped. The band saw is not possible to start in set mode.

The band saw is stated to the operation, when the covers is closed!Limit switched on saw arm control if cowers are open or not.

1.6.3. Saw band stretching and rupture inspection

This device checks the saw band stretching and causes immediate machine shut – down in the event the band ruptures.

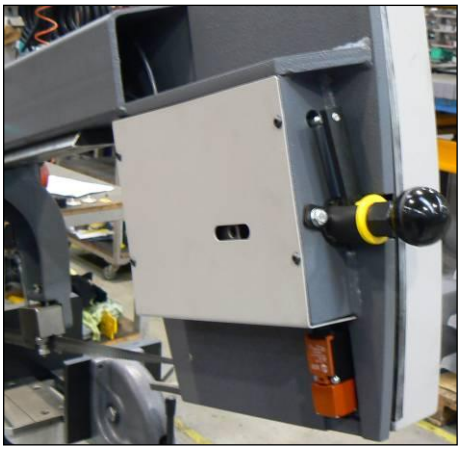

The device contains limit switch. Check the stretching carefully and periodically – eventually adjust.

1.6.4. Protective fencing

Protective fencing is preventing personal injury from moving machine parts.

The doors of the protective fencing are protected by limit switches. If the limit switch is open, the machine is turned off.

1.6.5. Band saw cover

It covers the visible area of the saw band from left guiding cube to the frame.

Never switch on the saw band driver if this cover is not mounted!

1.6.6. Brush cover

It covers the brush for saw blade.

Never switch on the saw band driver if this cover is not mounted!

1.7. Safety notes for the cooling

Attention!

- *When handling cooling agents always wear hazardous fluid-proof gloves!*
- *Wear protective goggles!*
- *Cooling liquid can get in contact with your eyes and may cause permanent severe injuries*

1.7.1. Instructions for first help

1. Pull off and safely remove polluted, soaked clothing.
2. For breathing, go out in the fresh air or look for first aid treatment.
3. Wash with water or use crèmes for contact with the skin.
4. Flush with water for eyes and look for first aid treatment.
5. For swallowing, drink a lot of water and induce vomiting. Look for medical help.

1.8. Umístěníštítkustroje / Maschinenschild position / Position of machine label

Machine label is placed on saw frame.

1.9. Umístěníbezpečnostníchznaček / Verteilung der Sicherheitszeichen / Position of safety symbols

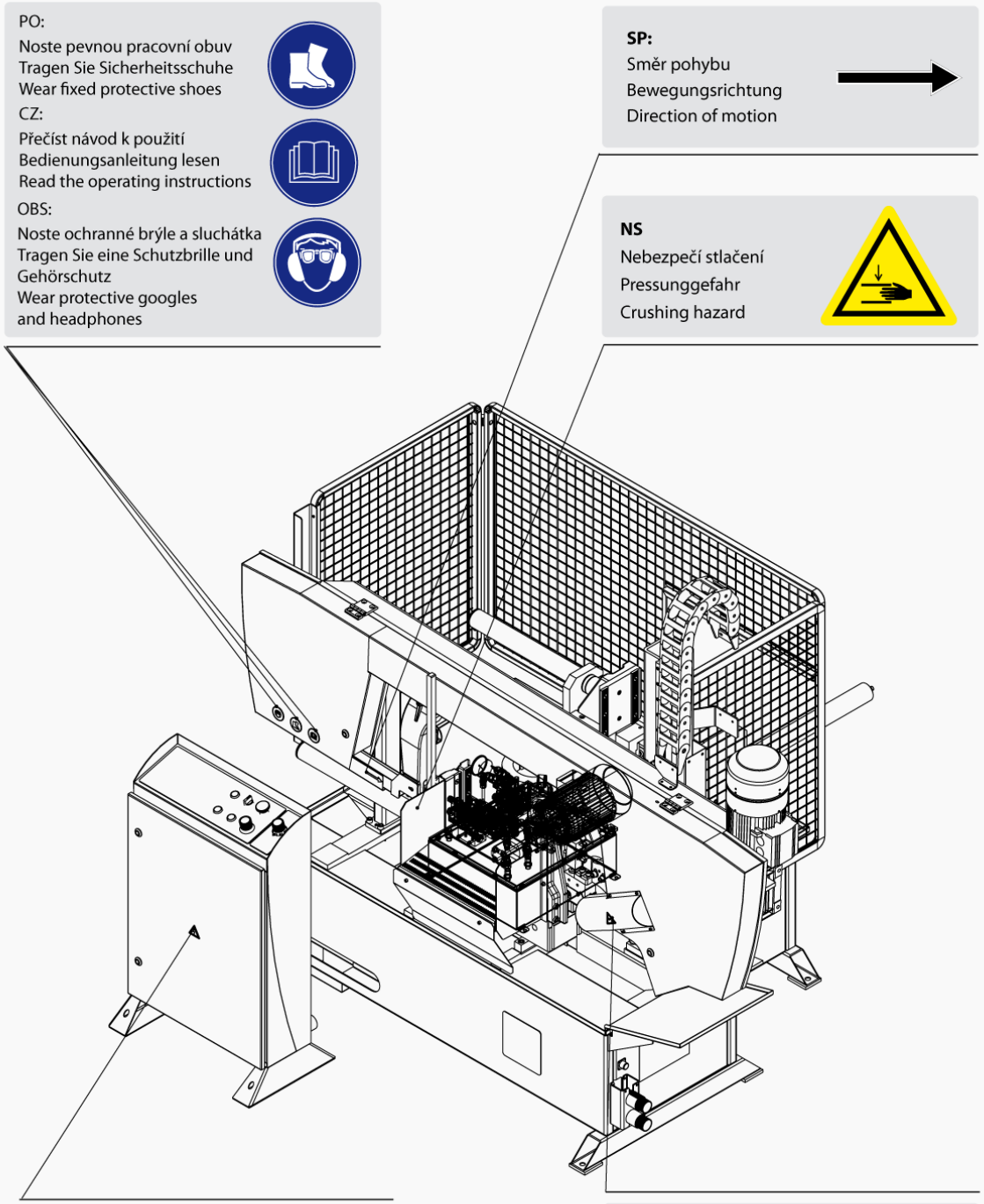

2. Machine documentation

2.1. Technická data / TechnischeDaten / Technical data

Hmotnoststroje / Maschinengewicht / Machine weight:	
• Hmotnost / Gewicht / Weight	1000 kg
Rozměrystroje / Maschinengröße / Machine size :	
• Délka / Länge / Lenght	1950 mm
• Šířka / Breite / Width	1950 mm
• Výška / Höhe / Height	2000 mm
Elektrickévybavení / ElektrischeAusrüstung / Electical equipment:	
• Napájení / Versorgungsspannun / Supply voltage	~3 x 400 V, 50Hz, TN-C-S/TN-C
• Příkon / Gesamptschlusswert / Total Input	4 kVA
• Max.jištění / Max. Vorschaltsicherung / Max. Fuse	16 A
• Krytí / Schutzart / Protection	IP 54
Akustickýtlak / Schalldruckpegel / Acoustic pressure**:**	
• Proline 320.280 ANC	L_{Aeqv} = 76,3 dB
Pohon / Atrieb / Drive:	
• Typ / Typ / Type	BN90LA4-
• Napájení / Versorgungsspannun / Supply voltage	~3 x 400V, 50Hz
• Výkon / Leistung / Output	2,2 kW
• Jmenovitéotáčky / Motornenndrehzahl / Nominal speed	1440 min^{-1}
Hydraulickézařízení / Hydraulikeinrichtung / Hydraulic equipment:	
• Typ / Typ / Type	PPM-AC0,37-PG1/2,5-TM16-CB03-FR (92.001.070, FWM)
• Výkon / Leistung / Output	4MPa / 1,1 kW
Chladícízařízení / Kühlmiteleinrichtung / Cooling equipment:	
• Typ / Typ / Type	2COP1-12H1-4
• Obsahnádrže / VolumenvomKühlmittel / Capacity	40 l
Rozměrpásu / Sägebanddimension / Band size:	
3800×27×0,9 mm	
JedenZdvih / VorschublängeEinfachhub / One Upstroak::	
600 mm	
Max. hmotnostpodávanéhomateriálu / Materialmaximalgewicht / Material max. weight:	
2180 kg	
Řeznárychlost / Schnittgeschwindigkeit / Cutting speed:	
20–120 m/min.	
Řeznérozsahy / Schnittbereiche / Cutting size:	

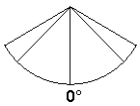			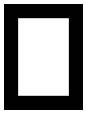	
0°	∅280 mm	320×280 mm	320×280 mm	280×280 mm

Warning:
If the material detection device is installed on the machine then maximal workpiece height is 10 mm shorter.
If machine has bundle device then material maximal height is half.

Level of acoustic pressure:
Equivalent level of acoustic pressure A (noise) at operator position are L_{Aeqv}=76,3dB. Mentioned values are levels of emission which doesn't have to represent safe levels. Factors which influence real level of acoustic pressure on machine operator are: working place characteristics, cut material, saw band. These factors have significantly influence on acoustic pressure.

2.2. Rozměrovéschéma / Aufstellzeichnung / Installation diagram

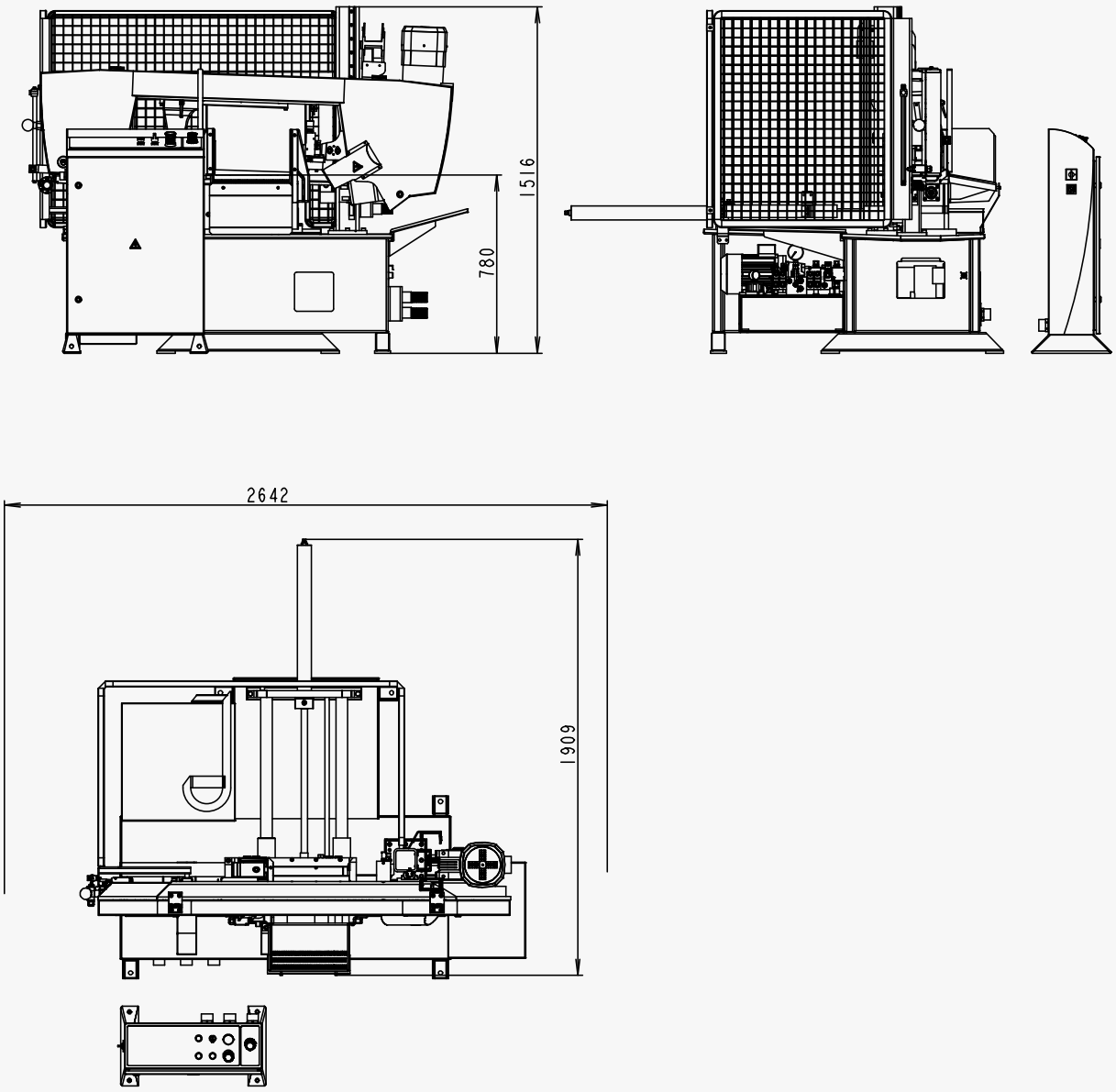

2.3. Popis / Beschreibung / Description

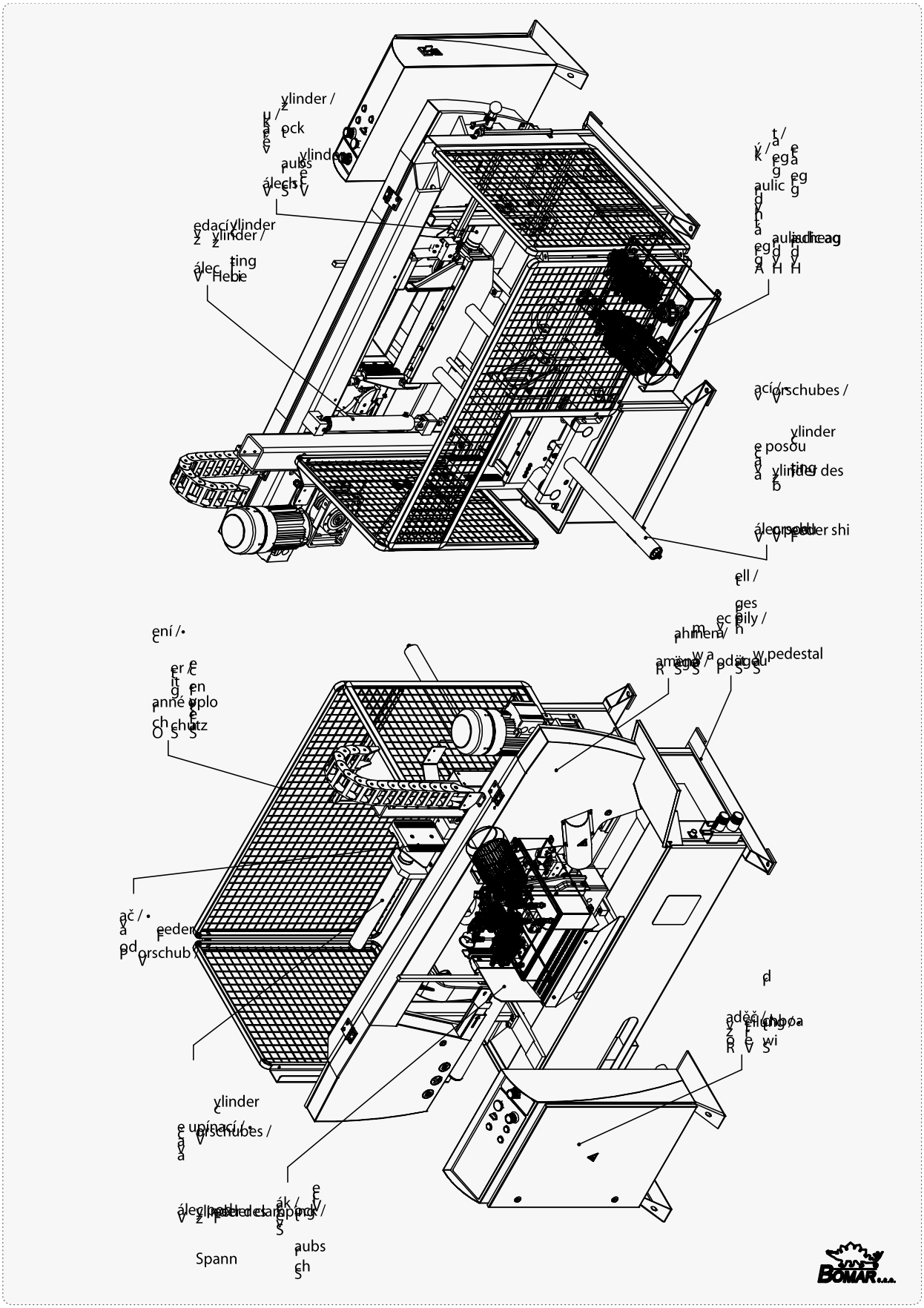

2.4. Transportation and stocking

2.4.1. Conditions for transportation and stocking

Keep recommendations for the manufacturers for transportation and stocking! If the recommendations are not kept, damage can occur to the machine.

- Don't use a forklift truck for handling the machine, if you do not have license for it!
- Don't move under suspended loads! Fault in lifting device may cause serious injury.
- Keep a safe distance from the machine during the transport.
- Temperature of the air from *-25°C to 55°C*, for a *short term* (max. 24 hours) temperature of the air until *70°C*
- Do not expose the machine to radiation (for example microwave radiation, ultraviolet radiation, laser radiation, x-ray radiation). Radiation can cause problems with the machine function and deteriorating condition of the isolation.
- Take measures, to prevent damage by dampness, by vibrations and by shakes.

2.4.2. Transport and stocking preparations

Close the vice and thoroughly oil all blank surfaces.

Lower the saw frame to the lowest position.

Make sure to empty the machine of all traces of the cooling agent.

Fasten all loose parts securely to the machine.

Pack and wrap the control desk securely to avoid damage during transport.

Fix the stickers stating the minimum approximate machine weight to at least five well visible places.

2.4.3. Transport and stocking

The machine must be secured during transportation. Screw on the palette to the floor of the van or the trailer. Be careful that the machine is not damaged during transportation. Store the machine only under conditions mentioned in the manual, to avoid damage of the machine.

It is forbidden to handle the machine any other way, than it is written in this operating instructions, the machine can be damaged.

2.4.4. Transportníschéma / Transport schema / Transport

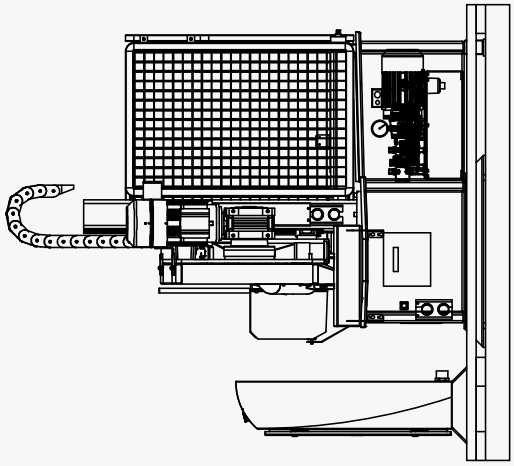

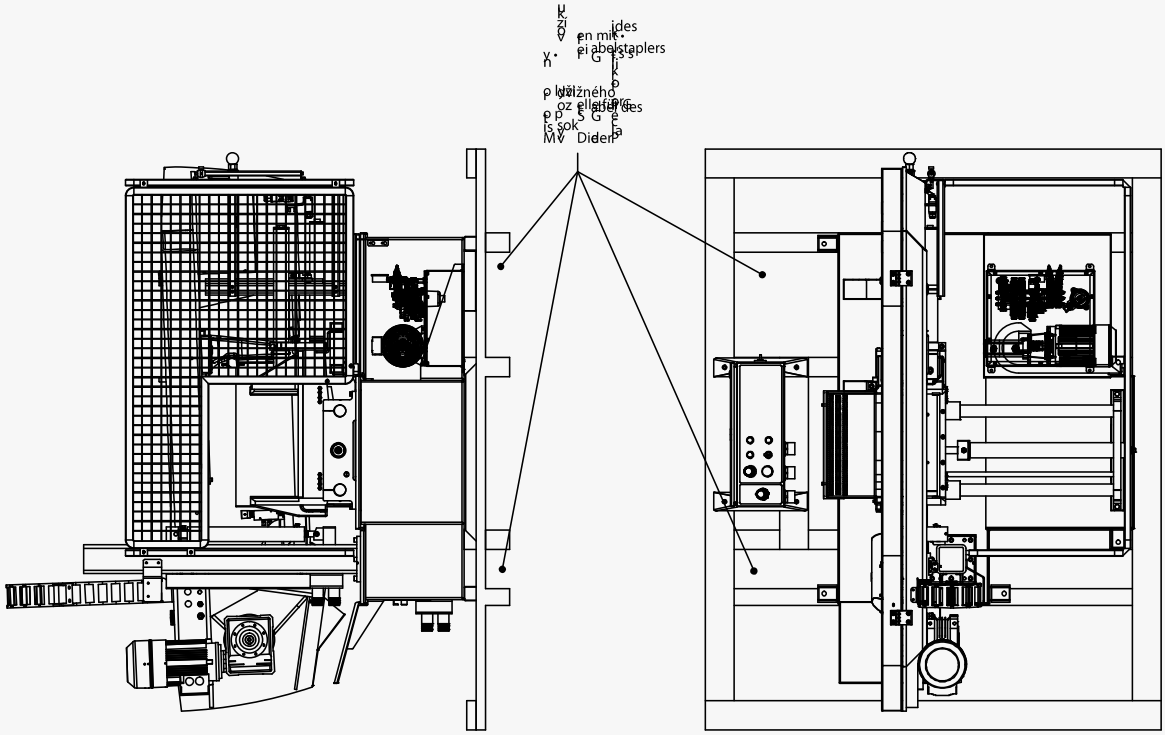

2.5. Activation

2.5.1. Machine working conditions

Keep the conditions of the manufacturer for machine operating! If recommendations are not kept, damage can occur to the machine.

The manufacturer warrants the correct function of the machine for these conditions:

- At temperature air from ***10°C to 40°C***, the temperature average during 24 hours must ***not exceed over 35°C***.
- At relative dampness of the air in the extend from 30% to 95% (not concentrate). Altitude lower than 1000 metres.
- Do not expose the machine to the radiation (for example microwave radiation, ultra-violet radiation, laser radiation, x-ray radiation). Radiation can cause problems with the machine function and deteriorating condition of the isolation.

Attention!
If the ambient temperature drops below 15 ˚ C is required before operating the machine to have switch on hydraulic unit around 10 minutes and then made several motion few times (for example, in manual mode) by all hydraulic cylinders. The reason is to heathydraulicoil to the operating temperature for proper function of the pressure switches (and choke).

2.6. Band saw unpacking and assembling

Remove the packing from the machine and unpack all parts.

Attention!
Switch off the main switch and lock it, before you start assembly! Otherwise, there is possibility of hazardous machine starting.

If the hydraulic unit is outside the machine (the machine only connected hoses and cables), it needs to be placed and mounted on a solid basis (floors, etc.). The mounting holes are used on the bottom (bases) of the tank.

2.6.1. Machine installing and levelling

Check the floor supporting capacity before machine installing. If the floor capacity does not agree with requirements, you must prepare the necessary base for the machine.

Minimal requirement:

machine weight – Proline 320.280 ANC – 1000 kg

+ weight of accessories

+ maximum weight of material

- The machine must be levelled at the horizontal position. All feet of the machine must touch with the floor after levelling
- The machine must be levelled by means of the calibrated spirit level. Spirit level is put on the vice area. Set the roller conveyors according to the spirit level.
- For machine levelling, take care that there is sufficient available space for operation, repair work, servicing of the machine and handling the material..
- The machine including appended parts and accessories must be visible from the place of operation.

2.6.2. Machine disposal after lifetime

Blown out all service fluids (cooling liquid, hydraulic oil) into designated reservoir. Dismantle machine into separate parts and dispose them in accordance with valid directives.

2.6.3. First run of the power pack

Before the first run check:

- The direction of the Pump, while run the power pack for max. 2seconds.
- The cooling fan of the motor has to rotate in the same direction as the arrow on the top of the motor cowling indicates.
- In case of wrong rotational direction, the electrical phase in the connection box is to be changed. This check is required after every disconnection from the power source
- Wiring matches with electrical and hydraulic diagrams
- the electric motors (pump and cooler) are properly connected and have the prescribed rotation
- the hydraulic accumulator with nitrogen gas to the specified value
- aux. elements work right (thermometer, level gauge, heater)

First run (Attention – working pressure on securing valve is set by producer in accoring the hydraulic diagram):

- In the short intervals activate an electric pump
- check for leaks and noise
- Bleed the hydraulic circuit
- if possible, test the circuit function with minimum load
- test the electrical equipment
- during operation monitor measuring equipment, noise, height and temperature of oil in the tank
- During this time a careful bleeding off for the whole hydraulic system is necessary. In case there is no bleeder port, the power pack will bleed itself after a while via the air breather on the tank or the return line filter.
- After multiple start-up.

2.6.4. Filling the reservoir with hydraulic oil

Oil regulations and recommendations of the manufacturer in the technical documentation (appendix) are to be carefully observed. For standard power packs we recommend the oiltype OH-HM32 (DIN 51524) of all known oil manufacturers.

Power packs have to be filled up with clean, pre-filtered oil! The purity of the hydraulic fluid must correspond to the class 10 NAS 1638 (reachable with filter ß =75)!

Filling from container, such as barrels, backets, etc. is not recommended or permitted!

The maximum oil level will be shown on the upper marking at the dipstick or the sight level glass. Overfilling has to be prevent. The maximum filling rate of 15 l/min shouldn´t be exceed.

Oil type	Kinematic viscosity v in mm^2/s in relationship to the fluid temperatur					Freezing point
	0°C	20°C	40°C	60°C	80°C	°C
OH-HM 32	220	100	32	15	7	-40
OH-HV 32	180	67	32	17	11	-40

2.6.5. Kotevní plan / Verankerungsplan / Grounding plan

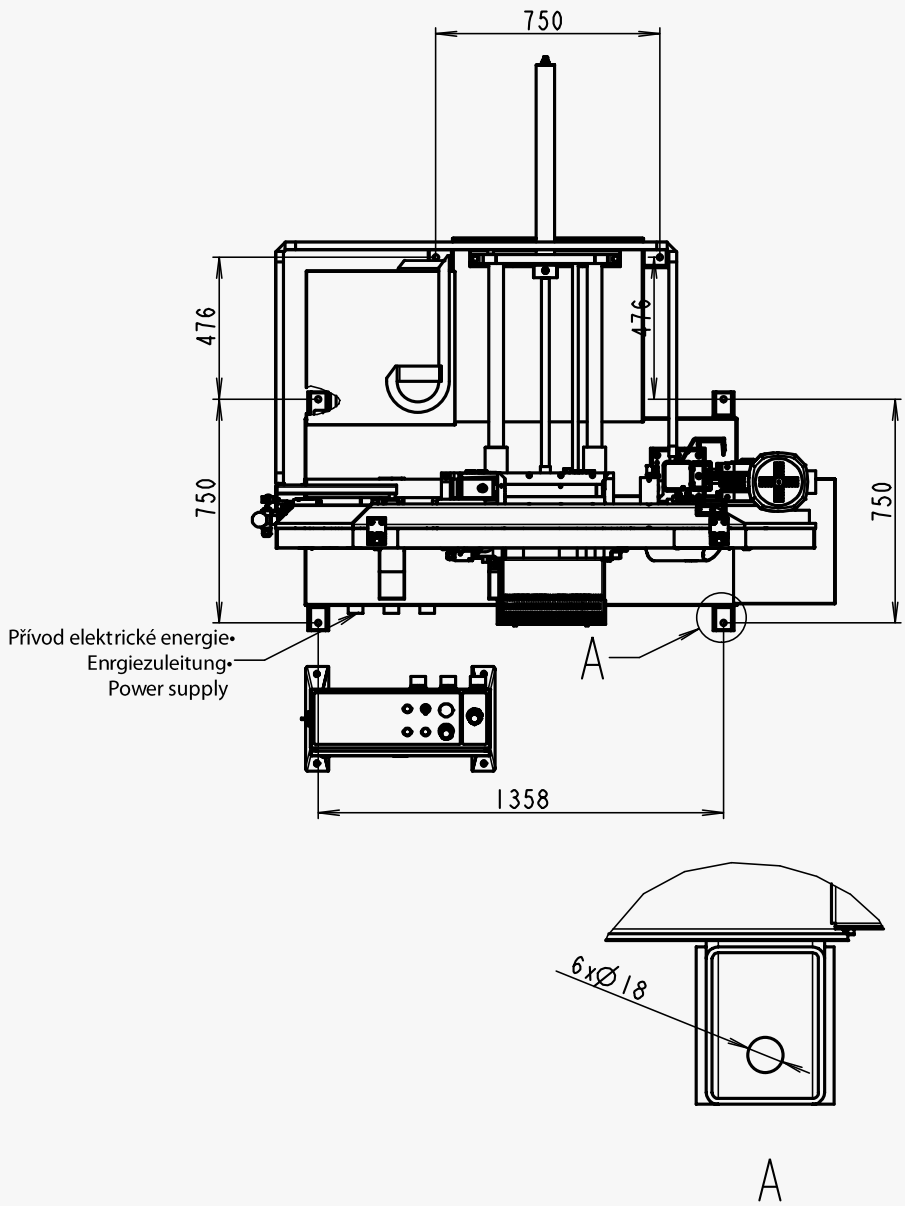

Kotvící materiál / Verankerungsmaterial / Grouding material

- 4× Hmoždina / Dübel / Plug – ø12 mm
- Vrtáno do hloubky / In die Tiefe gebohrt / Drilled to – 95 mm
- Šrouby / Schraube / Screws – M16×135

Šrouby podložit deskami o min. rozměrech P10×100-100
- Die Schrauben mit Platten mit Minimaldimensionen P10×100-100 u nterlegen
  Screew must be bot tomed with pl ates (min. dimensions P10×100-100)

Požadavky na rovinnost podlahy / Anforderungen an die Bodenebenheit / • Requirements for floor flatness

± 10 mm / 1 m

2.7. Electrical connection

Attention!
Only a qualified professional must carry out the servicing and repairs of the electric equipment! *Take special care during work with electrical equipment. High voltage shock can have fatal consequences! Always keep notes about work safety.*

Electrical parameters of the machine:

- Service voltage: ~ 3×400 V, 50 Hz, TN-C-S
- Total input / Max. fuse: 4 kVA / 16 A

Before connecting switch off the main switch of the power supply circuit for the machine and ensure dry place when doing connecting works!

Note:
The values of the crosscut of the conductor and the rated current are in the norms.

*Service voltage must agree with the line voltage!*Crosscut of the supply line must respond with rated current for max. machine load.

Note:
The socket with the fork can be used only at the machines with the rated current less than 16 A and total input less than 3 kW.

In case the machine is connected with a direct connection, an extra main switch must be added which can be locked in zero position.

Attention!
In this case the extra main switch becomes primary and the main switch on the machine has only secondary function.

2.7.1. Check the direction of the saw band

After the machine has been successfully connected, briefly switch on the machine and put the driving engine of the band in the running position. The direction must be in accordance with the arrow direction on the saw band cover. In case the direction of the saw band does not match, two phases at the terminal strip must be switched.

2.7.2. Check machine connection into electrical network

Attention!
When you connect the machine to the electrical network observe correct connection of all phases!
ENGINE IN IN HYDRAULIC AGGREGATE CANNOT BE OPERATED WITH REVERSE TURNING MORE THEN 10 SECONDS!!!

2.8. Filling of the cooling system

Prepare the mixture of the water and the cooling liquid. Keep the concentration specified by manufacturer. Shift away the cover from the drainage hole. Fill the mixture of the water and the cooling liquid to the tank of the cooling system. Area of the tank for the cooling liquid is discovered from the chapter *Technical data*.

Let the drainage hole opened and with the sieve during operation, because it secures the right work of the cooling system. Filling the tank with the cooling liquid, take care that the liquid does not drip out of the tank and the tank does not overflowed.

Note:
If machine is equiped with microniser, fill microniser with prescribed cooling liquid. This made the Microniserready for use.

2.9. Check machine function

Check, if the machine or some parts of the machine were not damaged during transport.

Check, if covers are installed and functional. Check by means of the Tenzomat if the saw band is correctly stretched. If it is necessary, you can stretch the saw band according to chapter *Selection and replacement of the saw band*. Values of the saw band stretching are on the Tenzomat. Switch on the main switch and check the motors and systems (saw band drive, hydraulic pump, cooling pump, chips conveyor).

Open and close the main vice. Turn the saw frame of the band saw from one outer position to other outer position. Raise the saw frame to the top position and drop the saw frame to the lowest position.

Start the machine with the cooling pump and let it run without load until the cooling system will be filled with cooling liquid. As soon as the cooling liquid starts to escape from the nozzles of the cooling system, the cooling system is ready for the operation. Carry one cycle of cutting without material. Check, if the machine runs with no irregularities. If all machine functions are right, the machine is ready for operation..

2.10. Saw band

Refit the saw band cover only after you have installed and tightened the saw band.

2.10.1. Saw band size

3800×27×0,9 mm

2.10.2. Selection of the saw band tooth system

The manufacturers provide the saw bands with constant and variable tooth system. The important factor for selection of the tooth system is length of the cutting canal with respect to the size of the product

1. *Constant tooth system* – the saw band has parallel tooth pitch all over length. This way is suitable for cutting of solid material.

BOMAR recommended Variable tooth system for band saw.

2. *Variable tooth system* – tooth pitch is variable. Variable tooth system is used for profiled materials and bundle cutting. Variable tooth pitch lowers vibration of the saw band, increases service life of the saw band and quality of the cutting area.

In tables, there are advised type of the tooth system depending on sizes and form of the cutting material.

Footnotes:

Examples of the tooth system marking:

32 S – number „32“ means 32 teeth on one inch (that means constant tooth system), letter „S“ marks teeth with zero angle of the tooth.

4–6 K – number „4–6“ means 4 till 6 teeth on one inch
(that means variable tooth system); letter „K“ marks teeth with positive angle of the teeth.

2.10.3. Saw band running-in

Running-in: Cut the material with the frame lowering reduced to 50% only. When vibrations occur increase or decrease the band speed.

When cutting small pieces run the band until approximately 300 cm^2 of material has been cut. When cutting large pieces run the band for 15 minutes approximately.When the band has been run, increase the lowering-speed to normal speed. The running in of the saw band avoids micro-breaks on the cutting edges of new saw band ensuing from first excessive stress. This would decrease service life substantially. The optimal running in of the saw band produces ideal rounded cutting edges and therefore the conditions for an optimal service life.

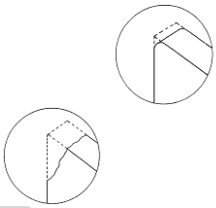

Note: *Run regrinding saw bands too.*

2.10.4. Tables for teeth selection

SHAPED MATERIAL (D_p, S = mm)

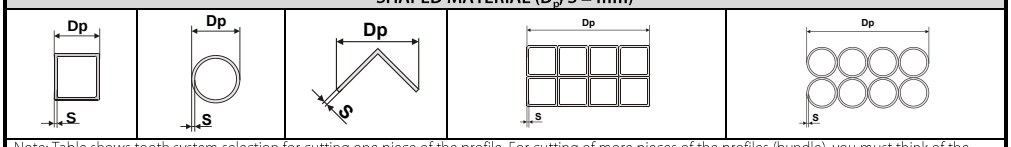

Note: Table shows tooth system selection for cutting one piece of the profile. For cutting of more pieces of the profiles (bundle), you must think of the size of the wall as double size of the wall of one profile (that means, size „S" equates to 2×S). In table, there are tooth systems constant and variable.

Size of the wall S [mm]	Tooth system (Z_p,Z) Outer diameter of the profile D_p [mm]					
	20	40	60	80	100	120
2	32 S	24 S	18 S	18 S	14 S	14 S
3	24 S	18 S	14 S	14 S	10–14 S	10–14 S
4	24 S	14 S	10–14 S	10–14 S	8–12 S	8–12 S
5	18 S	10–14 S	10–14 S	8–12 S	6–10 S	6–10 S
6	18 S	10–14 S	8–12 S	8–12 S	6–10 S	6–10 S
8	14 S	8–12 S	6–10 S	6–10 S	5–8 S	5–8 S
10	-	6–10 S	6–10 S	5–8 S	5–8 S	5–8 S
12	-	6–10 S	5–8 S	5–8 S	4–6 K	4–6 K
15	-	5–8 S	5–8 S	4–6 K	4–6 K	4–6 K
20	-	-	4–6 K	4–6 K	4–6 K	3–4 K
30	-	-	-	3–4 K	3–4 K	3–4 K
50	-	-	-	-	-	3–4 K

Size of the wall S [mm]	Tooth system (Z_p,Z) Outer diameter of the profile D_p [mm]					
	150	200	300	500	750	1000
2	10–14 S	10–14 S	8–12 S	6–10 S	5–8 S	5–8 S
3	8–12 S	8–12 S	6–10 S	5–8 S	4–6 K	4–6 K
4	6–10 S	6–10 S	5–8 S	4–6 K	4–6 K	4–6 K
5	6–10 S	5–8 S	4–6 K	4–6 K	4–6 K	3–4 K
6	5–8 S	5–8 S	4–6 K	4–6 K	3–4 K	3–4 K
8	5–8 S	4–6 K	4–6 K	3–4 K	3–4 K	3–4 K
10	4–6 K	4–6 K	4–6 K	3–4 K	3–4 K	2–3 K
12	4–6 K	4–6 K	3–4 K	3–4 K	2–3 K	2–3 K
15	4–6 K	3–4 K	3–4 K	2–3 K	2–3 K	2–3 K
20	3–4 K	3–4 K	2–3 K	2–3 K	2–3 K	2–3 K
30	3–4 K	2–3 K	2–3 K	2–3 K	1,4–2 K	1,4–2 K
50	2–3 K	2–3 K	2–3 K	1,4–2 K	1,4–2 K	1,4–2 K
75	-	2–3 K	1,4–2 K	1,4–2 K	1,4–2 K	0,75–1,25 K
100	-	-	1,4–2 K	0,75–1,25 K	0,75–1,25 K	0,75–1,25 K
150	-	-	-	0,75–1,25 K	0,75–1,25 K	0,75–1,25 K
200	-	-	-	0,75–1,25 K	0,75–1,25 K	0,75–1,25 K

SOLID MATERIAL (D = mm)

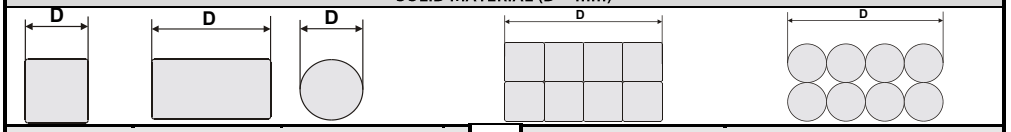

Constant tooth system		Variable tooth system	
length of the cut D	tooth system (Z_p,Z)	length of the cut D	tooth system (Z_p,Z)
to 3 mm	32	to 30 mm	10 –14
to 6 mm	24	20–50 mm	8–12
to 10 mm	18	25–60 mm	6–10
to 15 mm	14	35–80 mm	5–8
15–30 mm	10	50–100 mm	4–6
30–50 mm	8	70–120 mm	4–5
50–80 mm	6	80–150 mm	3–4
80–120 mm	4	120–350 mm	2–3
120–200 mm	3	250–600 mm	1,4–2
200–400 mm	2	500–3000 mm	0,75–1,25
300–800 mm	1,25		
700–3000 mm	0,75		

3. Machine control

3.1. Starting the band saw

» • Switch on the main switch of the band saw. The main switch is placed on the switchboard side.

• Refer the machine

3.2. Machine referring

Before using the saw,you must refer machine. Referring is necessary for correct positioning of the saw feeders.

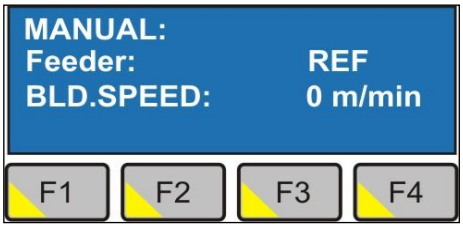

If the machine is not referred, it is not possible to move the feeder and on the LCD instead of a numeric value text REF.

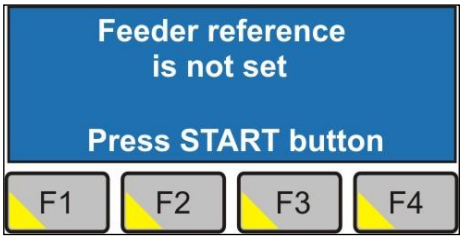

Operator is informed that the machine is not referred after machine start. For machine referring switch into automatic mode. Then START button begin flash.Press START button for begin referring process. After this process press F4 to confirm.

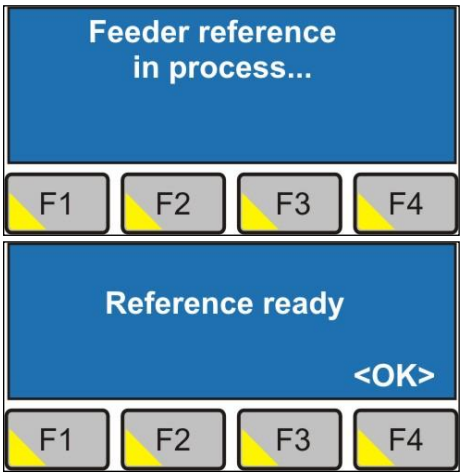

3.3. Control panel

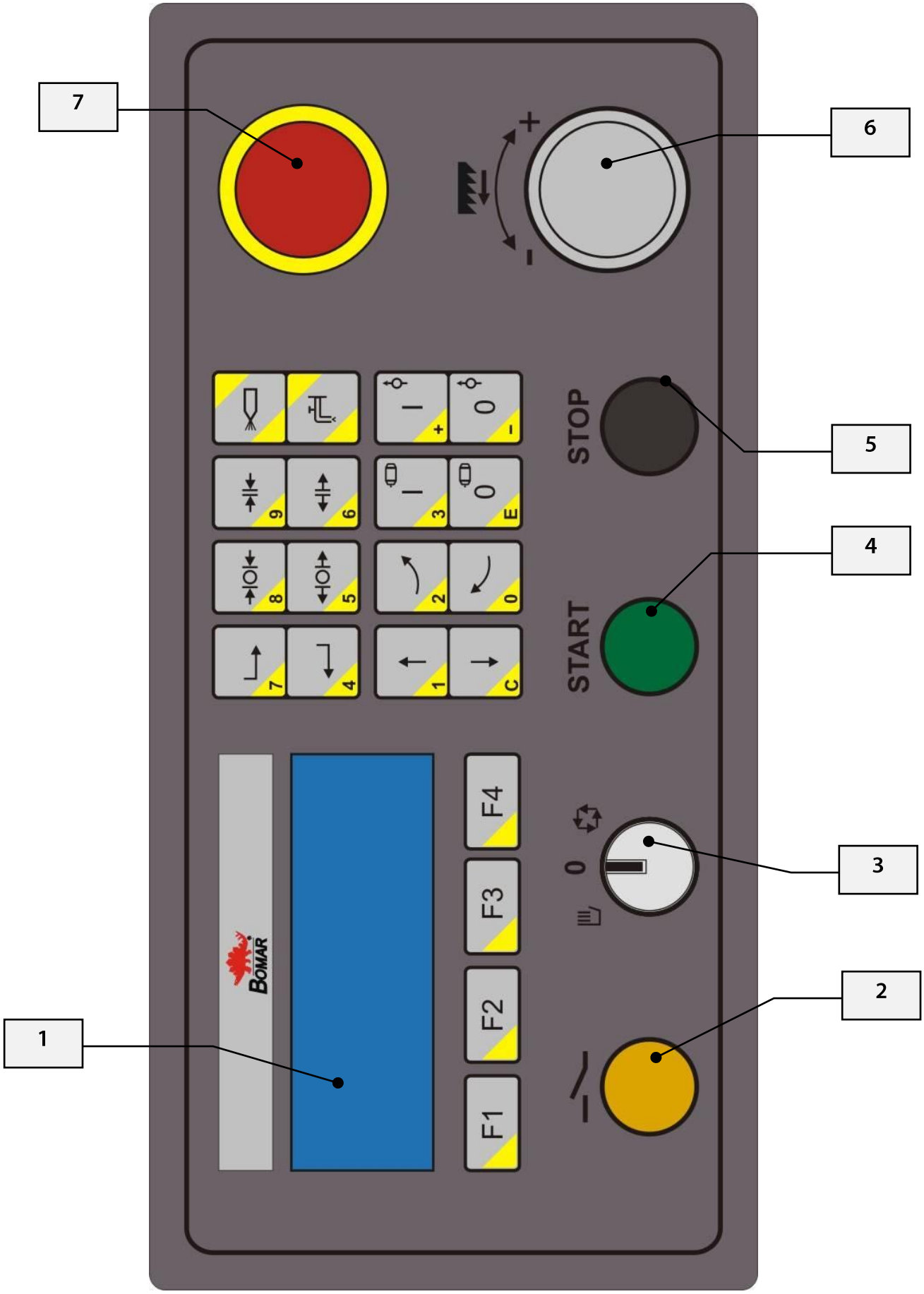

1	**LCD** LCD displays status information and menu.
2	**Safety circuit** Switch on the safety circuit by pressing button.
3	**Machine mode** 0 for service and setup for manual mode for automatic mode
4	**START - Switch on the working cycle** Button push starts the cutting cycle Button STOP stops cutting cycle.
5	**STOP - Switch off the working cycle** Stop cutting cycle.
6	**Frequency convertor** Turn to change the speed of the saw band.
7	**TOTAL – STOP button** In emergency causes the machine must be immediately switched off.
7 / 4	**Feeder movement** Pressing and holding button move with feeder to and from the machine (in manual mode)
8 / 5	**Open/Clamp feeder vice** Pressing and holding button open or clamp feeder vice in manual mode.
9 / 6	**Open/Clamp main vice** Pressing and holding button open or clamp full stroke vice in manual mode.
3 / E	**Turn on / off saw blade** Button with symbol „I“ turn on saw blade drive, button with symbol „0“ turn off saw blade.
2 / 0	no function
1 / C	**Move saw frame up/down** Pressing and holding buttons rises or drops saw frame. As you move down, you can activate the rapid moving by pressing F1 button simultaneouslywith .

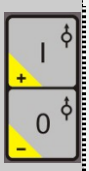	**Turn on /off hydraulic circuit** Button with symbol „I" turn on hydraulic circuit, button with symbol „0" turn off hydraulic circuit. The hydraulic circuit is automatically switched on when needed.
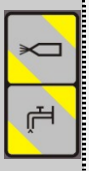	**Cooling system selection** Top – Cooling with Microniser (optional accessories) Below – Cooling is switched on (even when the drive is not running).
	Governing valve Adjust the speed of the arm sinking to the cut by governing valve. **ATTENTION!** **If you keep closing the throttle valve too tightly, the valve seat may wear off which causes its leakage. Therefore, close the valve always gently.**

3.4. Machine control in manual mode

- Switch machine into manual mode – key switch on control panel on .

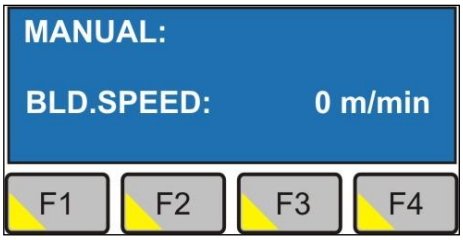

- The LCD displays the following menu, where is information about the selected cutting speed.
- All movements are controlled by an operator using the control panel, see chapter Control panel.
- Manual mode serves primary for material loading into machine

Procedure for material loading before automatic cycle:

1. Before material insertion, open both vices into maximal to the position what is needed to insert material open.
2. Clamp material with both vices.

Attention!
Feeder vice must be clamped before main vice.

3. Switch the machine in automatic mode and and follow the procedure for the automatic cycle.

3.5. Machine control in automatic mode

Attention!
Before the automatic cycle, the material must be clamped with both vices.

1. Switch machine into automatic mode – key switch on control panel on .

2. The LCD displays the following menu. The Preselect indicates the current program. The system can store up to 20 programs, move between them using the F1 and F4. F2 key (M +) saves all program valuesin the system. Press button F3 (Finish) on program what will be performed first in automatic mode.

3. After entering the programs values and after F3 (Finish), the operator is asked to perform trim cut. F4 not perform trim cut.

4. If the operator chose the trim cut on LCD is info about the progress. After the completion of trim cut, confirm by button F4.

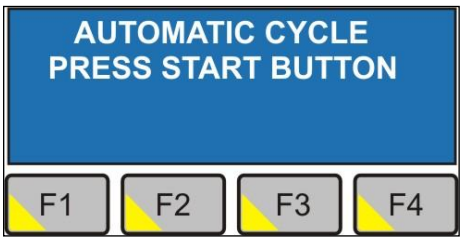

5. Now begins the automatic cycle. It begins by pressing the START button. The work cycle begins on the program, where was editing completed by button F3 (END) and ends on the last non-zero program. *Example: I edited program no. 2 last time (F3 was pushed on program no.2), program no. 3 and 4 has correct values, programs no. 5, and more are empty. Control system loads program no. 2 then program no. 3 and last performed program is no. 4.*

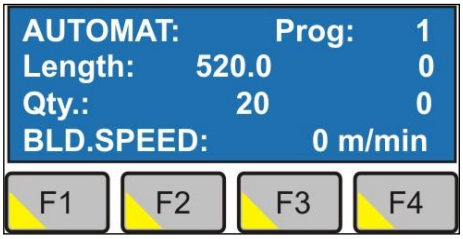

6. The operator is informed about the automatic cycle on the LCD.

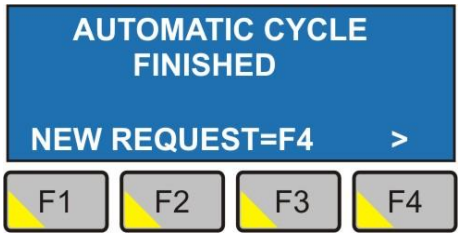

7. After completing automatic cycle, operator may enter new values for the next cycle (F4).

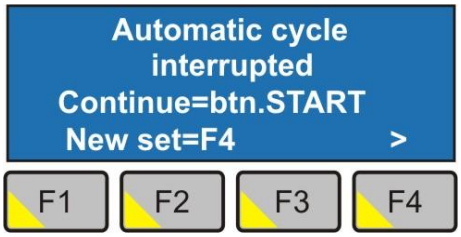

8. In case of interruption cycle (STOP), operator can only pause the cycle and then press START to continue or press the F4 key for interrupting cycle and for enter a completely new working cycle parameters.

3.5.1. Cycle breaking

»
- **STOP button**

  Semi-automatic cycle is interrupted by pressing button **5 – STOP** of the cycle

  The arm stops fall into cut and saw blade is stopped.

  By pressing button ***4 – START of the working cycle***, you can start the cycle.

- **TOTAL STOP button**

  In case of the risk, press button **TOTAL STOP.**

  After pressing **TOTAL STOP** button, saw band drive is immediately broken and the arm sinking is stopped.

- **Reactivation**

  4. Turn button **TOTAL STOP** according to the arrows (on the button).
  5. Lift saw arm above cut material and push START button.

3.6. Machine setup

Setup mode is activated by switching mode selection switch to position 0. After the switch is in position 0 on LCD is displayed:

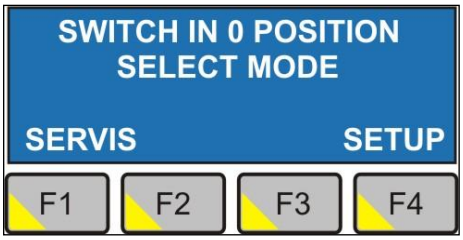

Parameters in the menu SERVICE are password protected. The parameters in the SETUP menu are common and are not password protected.

Password:	**947**

3.6.1. SETUP

on LCD	Description
Switch off motor: * Up. position Down position <ESC> > F1 F2 F3 F4	**Turn off saw blade drive** after cut: • Up. position – saw blade lifts after cut and saw blade drive is turned off above material. • Down position – saw blade drive is turned off immediately after cut. • **F1** back, **F4** next option
Cooling: * Not use With bandsaw motor < > F1 F2 F3 F4	**Cooling** • Do not use – cooling is off, suitable for cutting special materials such as cast iron • With saw blade engine – when the blade is running, also cooling pump is running. • **F1** back, **F4** next option
Swarf conveyer: * Not use With bandsaw motor < Complette cycle > F1 F2 F3 F4	**Swarf conveyer**(optional accessories) • Do not use swarf conveyer • With band saw motor – when the blade is running, also swarf conveyer is running. • **F1**back, **F4**next option
Switch off hydraulic: * 5 min 30 min < don't switch off > F1 F2 F3 F4	**Switch of time for hydraulic unit**: • 5 min. – 30 min. – do not turn off • **F1** back, **F4** next option
Piece cut of correction: 1.5 mm < <OK> > F1 F2 F3 F4	**Piece cut off** • The settings for the proper cut lengths in automaticmode • Saw blade thickness • **F1** back, **F4** next option

on LCD	Description
Language HMI: Cesky * English < Deutsch > F1 F2 F3 F4	**Language:** • Choose control menu language • **F1** back, **F4** next option
SPEED DISPLAYING: * m/min ft/min < > F1 F2 F3 F4	**Units for saw blade speed** • m/min orft/min • restart machine to apply change • **F1** back, **F4** next option
LENGTH DISPLAYING: * mm inch < > F1 F2 F3 F4	**Units for lengths** • mm or inches • restart machine to apply change • **F1** back, **F4** next option

3.6.2. SERVIS (password)

on LCD	Description
SERVIS: FEEDER LENGTH: 602 mm <ESC> <OK> > F1 F2 F3 F4	• **Feed length**– Specifies the length of the feeder. Do not change parameter – is set from the factory. • **F1** back, **F4** next option, **F2**save current option
SERVIS: SPEED CORRECTION: 21 < <OK> > F1 F2 F3 F4	• **Speed correction**–could be set in range 0–250, displayed constant is for the calculation belt speed from the analog input. • **F1** back, **F4** next option, **F2** save current option
SERVIS: ELGO 550 < 0 > F1 F2 F3 F4	• **ELGO** – feeder position admeasurement.**Do not change!** • For service purposes. Displays a variable number of linear pulse measurements • **F1** back, **F4** next option, **F2** save current option
SERVIS: Divergence of laser 160 mm < <OK> > F1 F2 F3 F4	• **Laser deviation** • The laser is placed behind the feeder vise jaws • The value affects multiple feeding. **Do not change!** • **F1** back, **F4** next option, **F2** save current option

on LCD	Description
SERVIS: Main vice open.time 60 < <OK> > F1 F2 F3 F4	• **Opening time for main vice.** • Opening time is in milliseconds. • **F1** back, **F4** next option, **F2** save current option
SERVIS: Feed vice open.time 40 < <OK> > F1 F2 F3 F4	• **Opening time for feeding vice** • Opening time is in milliseconds. • **F1** back, **F4** next option, **F2** save current option

Ifyouchoosetochangethekeyboardunitsfrom "inch" to "mm", thereisnoautomaticconversionofconstants in machinesetup „Servis“ and „Setup“.

Itisnecessarytocalculatebytheformula: 1 inch=25,4 mm a 3,28 ft/min=1m/min.

Itisnecessarytocalculatethesevalues:

Machinesetup „Servis“:

- Piece cutofcorrection (whencalculatingtheunit "inch“ rounded to 1 decimalplace = 0.0 inch)

Machinesetup „Setup“:

- Feeder length (whencalculatingtheunit "inch“ ithastoberounded to 1 decimalplace = 0.0 inch)
- Speed correction (whencalculatingtheunit "inch“ ithastoberounded to 1 decimalplace = 0.0 inch)
- Divergenceoflaser (whencalculatingtheunit "inch“ ithastoberounded to 3 decimalplaces = 0.000 inch)
- Feedingcorrection (whencalculatingtheunit "inch“ ithastoberounded to 3 decimalplaces = 0.000 inch)

3.7. Error messages

Error	Description
SAFETY BUTTON is OFF F1 F2 F3 F4	The safety circuit is not turned on (pos. 2 on control panel). Push safety circuit button (on pos. no. 2 on control panel) to remove error message.
TOTALSTOP pressed F1 F2 F3 F4	Total Stop button is active – pushed. Turn TOTAL STOP button by the arrows, and disable it. Press F4 to confirm the disorder.
Blade tension faulty F1 F2 F3 F4	Saw belt not is properly tensioned. Remove the fault and press F4 to confirm.
Faulty motor protec. F1 F2 F3 F4	Motor overload, thermal protection is activated. Do not overload blade engine! Remove the fault and press F4 to confirm.

3.7.1. Adjusting band guides

If you want to achieve a smooth and precise cut, it is helpful to position the guide cube as close as possible to the material.

1. Release the stopping lever of the listel. Move the left part of the guide so that the left edge of the guide blocks is as close as possible cutted material.
2. Lower the frame to the lower position and check the position of the guide cube towards vice loading area. The guide cube must be a distance of at least 10 mm from the vice loading area.
3. Tighten the lever of the gib and check the guide cube setting once more for possible collision with binding table or vice jaw.

3.7.2. Cutting speed adjusting

Blade speed is possible adjusted continuously from 20 to 120 m / min.

Use the frequency convertor on control panel (pos. 6) to adjust requested speed of the saw band.

3.7.3. Adjustment of pressure to the cut

The band saw ***Proline 320.280 ANC*** is equipped with cutting pressure regulation on the one guiding cube

> ***Notice!***
> *The guide cubes are equipped with valves, which must be open during operation*

Pressure adjusting is performed with regulating screw on guiding cube.

- ***Lower pressure to the cut*** – turn the screw clockwise.
- ***Higher pressure to the cut*** – turn the screw contra-clockwise.

3.7.4. Speed adjustment of the arm lowering

Speed of the arm lowering is adjusted by regulation valve on control panel

- Set the ***lower speed*** of the arm lowering to the cut by turning the switch ***clockwise***.
- Set the ***higher speed*** of the arm lowering to the cut by turning the switch ***anti-clockwise***.

> ***Notice:***
> *If you keep closing the throttle valve too tightly, the valve seat may wear off which causes its leakage. Therefore, close the valve always gently.*

3.7.5. Brush adjustment

The brush for chip removal from the saw band influences cutting durability saw band lifetime and wheels lifetime, hard metal guides and finally the cut accuracy. Brush adjustment must be checked every shift.

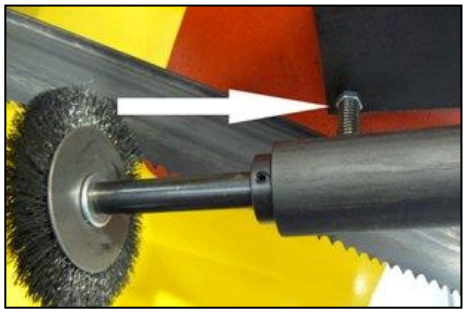

1. Release the fixative screw of the brush. It is possible to move with the brush.
2. Set the brush to the saw band according to the picture.

> ***Attention!***
> *The brush **must not** touch the bottom of the saw teeth!*

3. Tighten the fixative screw.
4. In case, that the brush is not turned right (driving wheel slips on the driving wheels of the saw band), push by means of the screw (see arrow) driving wheel of the brush to the driving wheel of the saw band.

Attention!
The screw must not be tightened with heavy force, because driving wheel of the brush can be damaged or the lifetime of the bearings of the driving wheel of the band can be lowered!

3.8. Material insertion

- Never walk under a suspended load!
- Never climb onto the gravity-roller conveyor!
- Do not hold the material for clamping material to the vice! The vice can cause injury!

3.8.1. Handling agent selection

- Use the strong handling agents to lift and transfer the material!
- Handle with the material only with the lift truck or use the suspension strands and the crane!
- Do not use the lift truck or crane in case that you do not have the license to handle with it!

3.8.2. Insertion

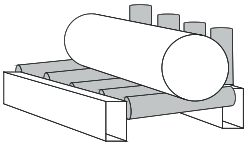

Insert material to the vice and ensure that the material cannot move in the vice or fall from the vice after the clamping. If you cut long pieces of the material (for example rod, tube), you must use the roller conveyors for material shifting to the band saw. Contact Bomar for more information about roller conveyors

Make sure the conveyor is long enough and the material cannot tip off the conveyor.

Be especially careful with round materials that it always stays on two vertical rollers and that it cannot fall off the conveyor!

3.8.3. Bundle material cutting

Attention:
Manualbundle clamping device is not standard equipment. Withoutthis device is a not possible cut bundle.
Attention!
If machine has bundle device then material maximal height is half.

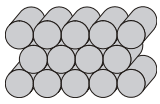

If you want to cut the material in the bundle, there are suggestions for the positioning of bundles

Round material bundle: Take care especially with round material that the bars are put according to the picture. If the bars are put differently, you may have problems with movement.

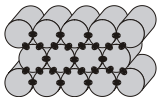

Always weld the material at the rear end of the bundle to secure it from moving.

Before welding always, switch the machine off at the main switch! The magnetic fields, which often occur during welding, may damage the controls!

Attention:
Not all material shapes are suitable for bundle cuts. Keep the recommendation of your supplier of the saw bands for material insertion to the bundle.

3.8.4. Supportingroller

When short pieces are going to be cut, the supporting roller has to be mounted to avoid falling down of material from the track.

Feedinglengthisthen limited to 550 mm (onestrokeforshortpiece).

The rollerhastobemountedtoposition on thetrack so thatthetigteninglever will be on thefixedsideoffeeder´sjaw (fromtherearview).

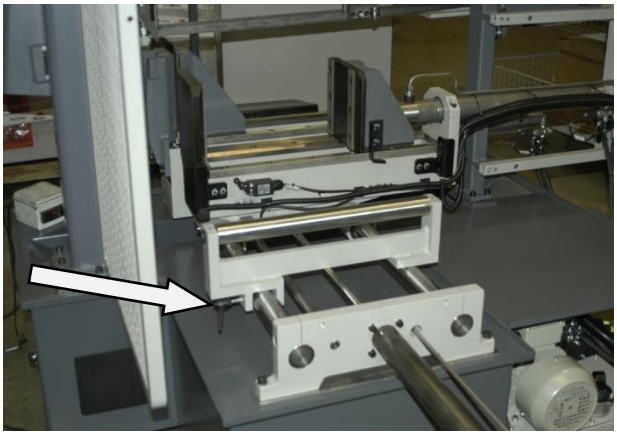

4. Machine service

4.1. Saw band dismantling

During the dismantling, take care that you do not damage the limit switch if the saw band stretching.

1. Lift the saw frame to the top position. Stop the saw frame in top position by control valve.

2. Dismantle yellow protective cover of the saw band. The cover is clamped with two screws.

3. Open the cover of the arm.
4. Turn by stretching star to the left side, release saw band stretching and pull saw band from blade wheels.

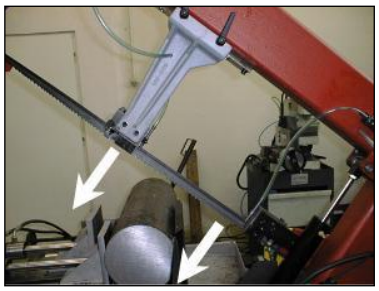

5. Pull up the saw band from the guiding cubes

4.2. Saw band instalation

During the installation, take care that you do not damage the limit switch if the saw band stretching!

1. Prior to installation, clean all track wheels, guide cubes and inner side of the arm thoroughly of all traces of chips and dirt. ***Keep in mind the teeth direction when installing the saw band.***

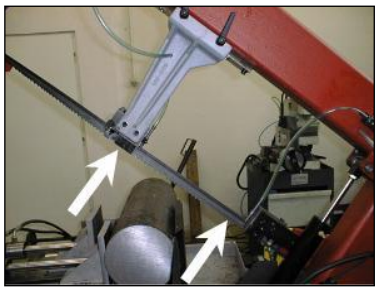

2. Insert new saw band in the guide cubes. Make sure the saw band runs between both guide rollers and it is pushed all the way to the top.

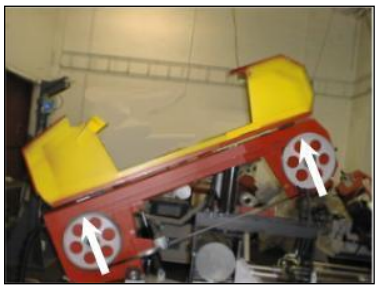

3. Put the saw band on both guide wheels. Make sure that the saw band ridge fits tightly to the wheel rim. Then push the saw band as far back as possible.
4. By turning the stretching star to the right, you will stretch the saw band slightly. Remove the plastic cover of the saw band teeth.
5. Close the cover of the arm.

6. Install the yellow protective cover of the band. The arrow on the cover must match the direction of the arrow on the band. If it does not, you must turn the band round.

4.3. Saw band stretching and inspection

Right saw band stretching is one of the most important criteria's, which influents accuracy and saw band service life. Stretch the saw bands according to the selected saw band and the band saw. Keep the recommendation of your manufacturer.

4.3.1. Saw band stretching

1. The saw band must not fall from the wheels after setting.
2. Install the Tenzomat on the saw band and secure it with screws.

3. Stretch the saw band until it is stretched to the recommended value

4.4. Saw band run adjustment on stretching wheel

Saw band run on the stretching wheel must be regularly inspected. The inspection has to follow every saw band replacement.

4.4.1. Saw band run inspection

If the run is not correct, the following problems may occur:

- **The saw band falls from the wheels** – The saw band and protective cover can be damaged.
- **The saw band runs on the wheel rim** – The saw band and wheel rim can be damaged

1. Start and stop saw band drive.
2. Stop the main switch!
3. Open rear cover of the saw frame.

4. Check saw band placing on the wheels.

- If the distance of the rear part of the saw band from wheel rim is 1 – 3 mm, setting is right.
- If the distance is bigger than 3 mm, or the saw band runs on the wheel rim, saw band run must be set.

4.4.2. Saw band setting

The saw band run is set with screw in the stretching cube on the saw frame. Optimal distance has been determined at **1 – 3 mm**.

- Turn by screw to the right, the saw band approximates to the stretching wheel rim.
- Turn by screw to the left, the saw band departs from the stretching wheel rim.

Check saw band run again after setting.

4.5. Saw frame lower stop position adjustment

The lower stop limits the lowest position of the saw frame. This stop point has to be checked at least once a month. If the lower stop point is incorrectly adjusted, the cutting table can be damaged or the material will not be cut completely

1. Lift the saw frame to the top position.
2. Release the nut of the screw and set it to the desired value.
3. Secure the screw with nut.
4. Set the limit switch of the saw frame lower position.

4.6. Limit switch of the saw frame lower position adjustment

If the lower stop of the saw frame was set, the limit switch must be set again.

4.6.1. Check setting

Lower the saw frame to the bottom position. If the saw frame is on the lower stop and the limit switch was responded, the limit switch adjustment is right. If the limit switch is not right, it must be set.

4.6.2. Limit switch setting

1. Release the nut of the stop screw of the switch and screw on the screw.
2. Lower the saw frame to the lower stop. Start the saw band drive.
3. Screw off the stop screw of the switch, until the saw band drive is not stopped.
4. Secure the screw with the nut and check limit switch adjustment again.

4.7. Cooling agents and chips disposal

The quality of the cooling agent will deteriorate due to:	If the solution is too weak:	If the solution is too strong:
• use of contaminated water • impurity • outside oil contamination (hydraulics, gears) • high operating temperatures • lack of air circulation • wrong concentration	• corrosion protection is diminished • lubrication decreases • microbial attack is more likely	• the cooling ability is decreased • foam behavior increases • emulsions stability deteriorates • sticky residue develops

4.7.1. Coolant device inspection

The state of the cooling agent has significant influence on the cutting quality and on the operational life of the machine. Lifetime of the cooling liquid is 1 year, after this time we recommend change the cooling liquid. This time is dependent on the degree of pollution cooling liquid (especially with oils) and on the other factors.

Check level of the cooling liquid and function of the pump periodically!

> ***Note:***
> *If the state of the cooling liquid is not satisfactory, the cooling liquid must be changed.*

Check the state of the cooling agent according to the following table:

Testing	Interval	Method	Condition	Precaution
Liquid level	daily	visually	too low	after concentration check, refill with water or emulsion
Concentration	daily	refractometerden simeter	too high too low	refill water refill base emulsion
Smell	daily	by sense of smell	unpleasant smell	good ventilation, add biocides or renew coolant
Contamination	daily	by sense of smell	visible oil leaks, sludge fungi	surface cleaning, fix leaks, add biocides or fungicides, or coolant renewal after added system cleanser*
Corrosion-protection	when necessary	visually chip test Herbert-test	insufficient corrosion protection	test stability, if necessary – increase concentration or pH value
Stability	when necessary	refractometer	oiling	add concentrate, enquiries to supplier
Foam reaction	when necessary	shaking test	too much foam, foam disperses too slowly	avoid aeration, increase water hardness, ix with defoamer

* According to manufacturers' instructions

4.7.2. Chips disposal

Chips resulting from cutting operations must be disposed of in accordance with the relevant regulations.

- Let the chips drip excess fluid!.
- Fill a watertight container with the chips! Be careful that the container does not leak, because even after a long dripping time, they still contain coolant residue.
- *Place the container into the care of a disposal company equipped for the disposal of chips contaminated with cooling liquid.* In case the machine is equipped with micro-spray installation, the chips must also be handed over to a disposal company.

4.8. Hydraulic, Greases and oils

4.8.1. Gearbox oils

In gearboxes, oil is used for the whole lifetime of the gearbox. We recommend replacing of the filling oil in case of repair.

Use oils with specification DIN 51517 in the gearboxes. Select the viscosity grade ISO VG according to the original oil fill.

Attention:
When replacing, use oils recommended by BOMAR or oils, which has comparable parameters from the other manufacturers.
Do not forget, that mineral and synthetic oils must not be mixed!

Recommended oils and quantity according to the type of the band saw

Band saw	Gearbox oil	Capacity
Proline 320.280 ANC	Shell Tivela S 320	1,0 l
Swarf conveyor	Shell Tivela S 320	0,075 l

Comparative table of the gearbox oils

Manufacturer	Viscosity grade		
	ISO VG 100	ISO VG 220	ISO VG 320
BP	Energol GR-XP 100	Energol GR-XP 220	Energol GR-XP 320
Castrol	Alpha SP 100 Alpha MW 100	Alpha SP 220 Alpha MW 220	
Elf	Reductelf SP 100	Reductelf SP 220 ReductelfSynthese 220	Reductelf SP 320
Esso	Spartan EP 100	Spartan EP 220	Spartan EP 320
Mobil	Mobilgear 627	Mobilgear SHC 220 Mobilgear 630	Mobilgear 632
ÖMV		PG 220	
Paramo	PP 7	Paramo CLP 220	Paramo CLP 320
Shell	Shell Omala 100	Shell Omala 220 Shell Tivela S 220	Shell Omala 320 Shell Tivela S 320
Total	Carter EP 100	Carter EP 220	Carter EP 320

4.8.2. Lubricant greases

We recommend using lithium based saponified grease, class NGLI-2 for lubrication. Different greases are mixable, if their oil bases and consistence type are identical.

Comparative table of the lubricant greases:

Manufacturer	Type of the lubricant grease
BP	Energrease LS - EP
DEA	Paragon EP1
Esso	FETT EGL 3144
	Beacon EP 1
	Beacon EP 2
FINA	FINA LICAL M12
Klüber	Microlube GB0
	Staburags NBU8EP
	IsoflexSpezial
Optimol	Optimol Longtime PD 0, PD1, PD2
Shell Aseol AG	ASEOL Litea EP 806-077
Texaco	Multifak EP1

4.8.3. Lubrication

There are several placing on the machine, which are necessary to grease periodically. It secures the right function of the machine.

Lubrication place	Lubrication
	The guiding cubes leading – grease with oil from both sides once a week.
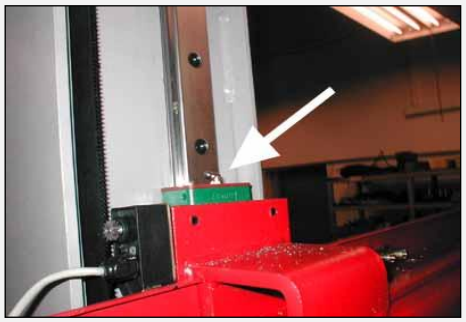	The linear guiding of the saw arm – lubricate with grease once a three months (see chapter **Lubricant Greases**). Use 3-5g grease on the every carriage of the linear guiding. Use the grease gun to the lubrication. Drive 3-5 times whole line of the linear guiding during lubrication.

4.8.4. Hydraulic oils

Replace the hydraulic oil once in 2 years, because the oil can deteriorate its properties and cause problems the hydraulic equipment. If the hydraulic system is equipped with filter (2SF 56/48-0,063), replace the filter too.

Use oils with specification DIN 51524-HLP, ISO 6743-4 and viscosity grade ISO VG 32 in hydraulic aggregates. Hydraulic oils quantity – see chapter **Hydraulic oil level check**.

Note:
When replacing, use oils recommended by BOMAR or oils, which has comparable parameters from the other manufacturers. Do not forget, that mineral and synthetic oils may not be mixed!

Comparative table of the hydraulic oils

Manufacturer	Type	Manufacturer	Type
Agip	Oso 32	Ina	Hidraol 32 HD
Aral	Vitam GF 32	Klüber	Lamora HLP 32
Avia	Avilub RSL 32	Hungary	Hidrokomol P 32
Benzina	OH-HM 32	Mobil	Mobil DTE 25
BP	Energol HLP 32	ÖMV	HLP 32
Bulgaria	MX-M/32	Poland	Hydrol 30
Castrol	Hyspin AWS 32	Rumania	H 32 EP
Čepro	Mogul HM 32	Russia	IGP 30
DEA	Astron HLP 4hy6	Shell	Tellus Oil 32
Elf	Elfolna 32	Sun	Sunvis 832 WR
Esso	Nuto H 32	Texaco	Rando HD B 32
Fam	HD 5040	Valvoline	Ultramax AW 32

Manufacturer	Type	Manufacturer	Type
Fina	Hydran 32		

4.8.5. Hydraulic unit service

After 50 hours working time, or the latest 3 months after the first run, the first service should be carried out. This includes:

- checking off all screws and connections, fixing points, tubes and hoses for leakage
- Check hydraulic oil level
- During time of duty the oil temperature shouldn´t exceed 60-70°C
- check function of signaling components (thermometer, level gauge, dirty filter indicator)
- Check the adjustment of working pressure

To realize a high reliability of the power pack, the manufacturer lays down following inspection intervals

Interval	daily	weekly	monthly	three monthly	six monthly	annually
Hydraulic fluid						
Level	-	•	-	-	-	-
Temperature	-	•	-	-	-	-
Condition	-	-	•	-	-	-
Change interval	-	-	-	-	-	•
Filter						
Change interval	-	-	-	-	-	-
Other checks						
External Leakages	•	-	-	-	-	-
Contamination	•	-	-	-	-	-
Damages	•	•	-	-	-	-
Noise-(level)	•	-	-	-	-	-
Gauges	-	-	•	-	-	-

4.9. Machine cleaning

Clean the machine from the cooling liquid and impurities after every shift stopping. Conserve the guiding surfaces, mainly.

- Clamping jaws guiding of the vice.
- The guiding of the feeder.
- Loading surface of the vice.

4.10. Worn pieces replacement

4.10.1. Hard metal guides replacement

If the hard metal guides cannot be adjusted, they have to be replaced.

1. Dismantle the saw band. Remove the hosepipe leading the cooling agent. Dismantle guide cube of the saw band.

2. Loosen the adjusting screws of the metal guide.

3. Loosen the binding screw of first metal guide. Remove adjustable hard metal guide.

4. Loosen the binding screw of second metal guide. Remove the hard metal guide
5. Insert new hard metal guides and fasten them tightly.
6. Mount the saw band. Adjust the hard metal guides.

4.10.2. Round brush replacement

If the chip removing brush is so worn, that it does not fulfill its function, the brush must be replaced.

1. Release the nut of the brush, exchange old brush to new brush and screw on the nut of the brush.
2. Set the brush to the saw band.

4.10.3. Saw band guiding rollers replacement

If the saw band is not sufficiently guided by guiding pulleys or if the pulleys are obviously worn, the pulleys should be replaced.

ATTENTION!
Guiding pulleys must be replaced together on both guiding cubes!!

1. Dismantle the saw band.
2. Disconnect the hose from the cooling agent, screw off the pressure regulation. Let the pressure regulation connected to the hydraulic system. Dismantle the guiding cube of the saw band..

3. Tighten the guiding cube to the vice and dismantle both eccentrics with bearings following way.

ATTENTION!
Mark both eccentrics placing and components on the eccentric!
Eccentrics must not be replaced with each other!!

4. Screw off nuts from eccentrics..

5. Remove eccentrics from bearings by means of the swager

6. Change all bearings and other worn parts.

7. Install eccentrics to the cubes. Install components on both eccentrics in given order. Put bearings by means of the preparation on eccentrics.

ATTENTION!
Do not replace the eccentrics placing in the cube

8. Screw on nuts on both eccentrics and tighten them.

9. Insert the saw band to the guiding cube (ca. 15 – 20 cm). Set the eccentrics by means of the wrenches, the saw band must run in the centre. Guide pulleys must not press too much on the band, but must spin freely during the band run.
10. Tighten nuts on both eccentrics.
11. Remove the testing piece of saw band from the cube lead. Install the guiding cube on the machine and connect the pressure regulation to the cut and cooling. Install the saw band.

4.10.4. Stretching wheel replacement

1. Dismantle the saw band.

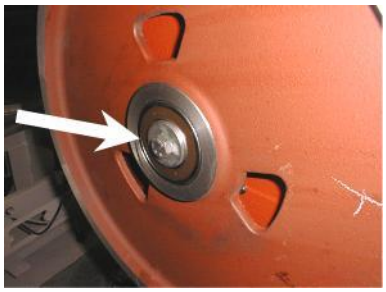

2. Screw off the screw and take down the washer.

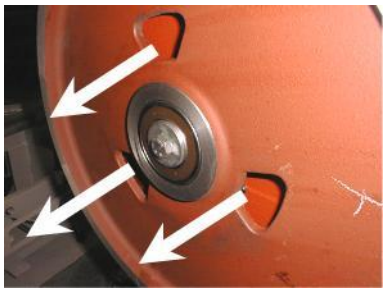

3. Pull off the wheel from the shaft by means of the three-armed puller. If bearing stayed on the shaft, pull off it too
4. Check score of the bearings of the stretching wheel and replace them for new.

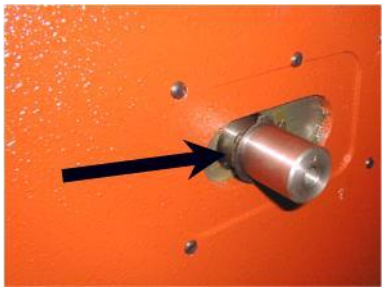

5. Clean the shaft and grease it with oil. Insert retaining ring to the groove.

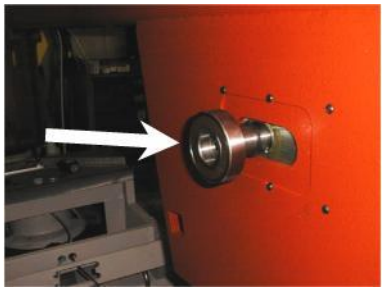

6. Install bearing on the shaft and move it to the retaining ring. Insert the distance ring on the shaft and move it to the bearing.

7. Insert the retaining ring to the hole in the wheel.

8. Insert the bearing to the hole in the wheel and press it to the retaining ring.

9. Put the wheel on the shaft and screw on the preparation to the wheel stretching to the hole in the shaft.

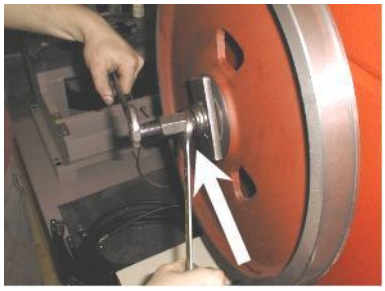

10. Pull on the wheel on the shaft.

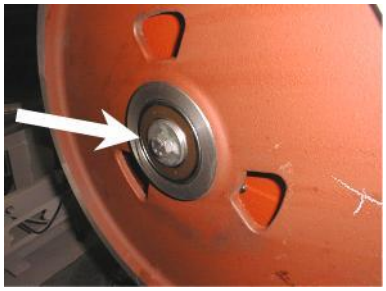

11. Screw on washer and screw back..
12. Install the saw band. Wheel replacement is ready.

4.10.5. Driving wheel replacement

1. Dismantle the saw band

2. Screw off the screw and remove the washer.

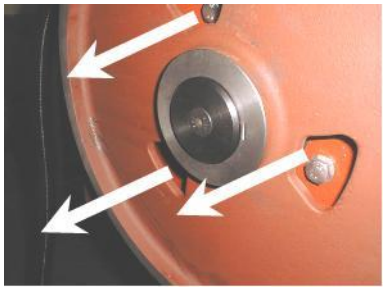

3. Pull off the wheel from the shaft by means of the three-armed puller.

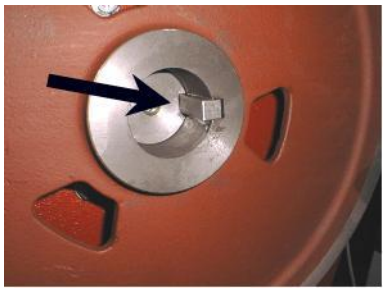

4. Install the wheel on the shaft. Insert the feather to the groove.

5. Screw on the preparation to the wheel stretching to the hole in the shaft. Pull on the wheel on the shaft.

6. Screw on washer and screw back.
7. Install the saw band. Wheel replacement is ready.

4.10.6. Cooling pump replacement

Only a qualified worker can carry out the connection!

High-voltage shock may have fatal results

1. Pull the tank with the liquid from the pedestal..
2. Remove the hosepipe leading to the cooling agent from the plug on the pump. Screw off four screws from the cooling pump flange and pull out the pump from the sheet metal holder.

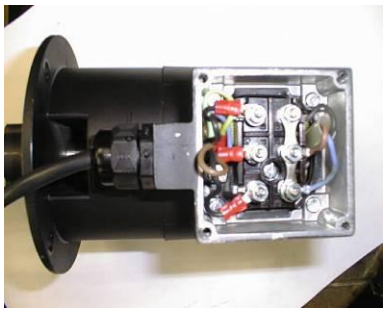

3. Remove the cover of the pump terminal switchboard. Disconnect 4 terminal connectors of the input cables. Cables are identified according to the red clamps..

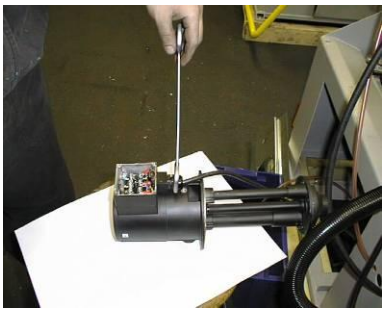

4. Loosen the bushing and pull the cable out from the pump.

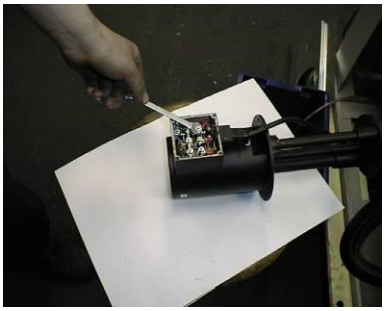

5. Dismantle new pump switchboard cover. Push the cable through the bushing and fasten it.

6. Screw on the cable bushing and cover of the terminal block. Do not forget the rubber gasket! Tighten the cooling liquid hose with non-stick tape and screw it again. Install cooling liquid hose, place the pump on the sheet metal holder and screw it

5. Troubleshooting

5.1. Mechanical problems

Problem	Possible causes	Repair
1. Slanting cut	- Wrongly adjusted hard metal guides.	Set according to the chapter „Servicing and adjustment“
	- Worn hard metal guides.	Replace to the chapter „Worn pieces replacement“
	- Wrongly adjusted cubes of the saw band guiding.	Set according to the chapter „Servicing and adjustment“
	- Worn bearings of the saw band guiding.	Replace according to the chapter „Worn pieces replacement“
	- Wrongly adjusted swarf brush.	Set according to the chapter „Servicing and adjustment“
	- Worn swarf brush.	Replace according to the chapter „Worn pieces replacement“
	- Insufficient saw band stretching.	Rise the saw band stretching and set the limit switch.
	- Wrongly chosen tooth system of the saw band.	Replace the saw band and keep the instructions of manufacturer on new saw band choice.
	- Worn saw band.	Replace the saw band.
	- Wrongly balanced roller conveyor.	Set the roller conveyor.
	- Dirty feeding board.	Cleanse the feeding board from debris, chip and residue material.
	- Guiding arm and guiding cube are loosened.	Clamp the guiding arm.
	- Guiding arm and cube are too far from the material.	Set the guiding cube to the material.
	- Too fast cutting rate.	Lower the material feeding speed.
	- Unexpected oscillation in material quality.	Set the cut and feeding speed to the relevant material.
2. The cut is not cut upon desired angle	- Securing lever is loosened.	Check the securing lever efficiency and carry out its adjustment according to chapter „Servicing and adjustment“.
	- Set angle does not match the cut angle.	Check the angle adjustment with a protractor and possibly set it according to chapter „Servicing and adjustment“.
	- Insufficient saw band stretching.	Stretch the saw band and set the limit switch according to chapter „Servicing and adjustment“.
	- Guiding arm and guiding cube are loosened.	Fasten the guiding arm and the cube.
	- Dirt between material and clamping jaw.	Cleanse the material and mating jaw.
3. Short lifetime of the saw band	- Insufficient saw band stretching.	Raise the tightening of the saw band set the scanner of saw band tightening according to chapter „Servicing and adjustment“.
	- Worn swarf brush.	Check the swarf brush condition and replace it in case of excessive use as described in chapter „Worn pieces replacement“
	- Wrongly adjusted swarf brush.	Check swarf brush adjustment, set it according to chapter „Servicing and adjustment“
	- Over stretched saw band	Lower stretching of the saw band and set the limit switch of the saw band stretching according to chapter „Servicing and adjustment“
	- Wrongly adjusted hard metal guides.	Check the adjustment of the hard metal guides and carry out adjustment as described in chapter „Servicing and adjustment“
	- Worn hard metal guides of the saw band.	Check the condition of the hard metal guide and if it is too worn, replace hard metal guides

Problem	Possible causes	Repair
		according to chapter „Worn pieces replacement“
	- Worn saw band guide bearings.	Check guiding bearings and if you notice some sort of excessive damage, replace them according to chapter„Worn pieces replacement“
	- Wrongly adjusted guiding cubes of the saw band.	Set guiding cube according to chapter „Servicing and adjustment“
	- Wrongly adjusted down feed and saw band speed.	Adjust the feeding and speed of a saw band according to values published by saw band manufacturer.
	- Different material quality.	Adjust feeding and speed of a saw band according to desired material (try cut-test).
	- Low-class saw band	Replace the saw band (contact your local accessory supplier for more information)
	- Wrongly chosen saw band tooth system.	Replace the saw band and keep instructions of the manufacturer on the choice.
	- Wrongly adjusted tracking.	Check the space between top of a saw band and driving wheel. Perhaps adjust the tracking as described in chapter „Servicing and adjustment“
4. Insufficient cut output.	- Worn saw band.	Replace the saw band and keep instructions of the manufacturer on the choice.
	- Wrong saw band tooth system.	Replace the saw band and keep instructions of the manufacturer on the choice.
	- Wrongly set down feed and speed of a saw band.	Set feed and speed of a saw band according to values published by saw band manufacturer.
5. The cut is not finished.	- Wrongly adjusted lower stop point of the saw frame.	Check lower limit switch and screw.
	- Stop point surface is messed-up.	Cleanse stop point surface of the limit switch from debris and residue material.
6. By choke is not possible turn	- Metal clamps between valve and panel.	Clamps must be removed and put on the shaft O-Ring about 10x2 mm.
	- Metal clams are in body of valve.	Valve must be cleared or changed.
7. Saw band drive cannot be started.	- Pressure switch is adjusted wrong.	Set the pressure switch according to chapter „Servicing and adjustment“
	- Pressure switch is defective.	Replace defective parts of the pressure switch.
8. The saw bands are cracked.	- In stretching wheel is wrong adjusting geometry.	Adjust distance band from recess wheel c.2 mm according to operating instructions.
	- Hard metal plates of circuit saw band are not adjusting.	Hard metal plates of circuit saw band must be adjusting according to operating instructions.
	- Guiding cubes are not adjusting (bearings + hard metal circuit)	Guiding cubes must be adjusting (bearings + hard metal circuit) according to operating instructions.
	- Bearings of guiding cubes are used (rolling elements are damaged or outside ring of bearing has conical form).	Bearings of guiding cubes must be replaced. Bearings must be adjusting according to operating instructions.
9. Damage tooth system of the saw band	- In gripping the lifting cylinder is backlash.	
	- Squeezed pin upper or downer holder of the lifting cylinder.	Exchange complete upper or downer holder of lifting cylinder.
10. The saw is cut downing.	- Geometry of hardmetal guiding cubes is wrong adjusted.	Hardmetal guiding cubes must be adjusted.
	- Bearings of guiding cubes are used.	Bearings of guiding cubes must be replaced.
11. Cleansing of the saw band is not functional.	- Elastic wheel of the brush drive is worn-down.	Elastic wheel of the brush must be changed.
	- Knurling of the driving wheel is worn-down.	Driving wheel must be changed.

Problem	Possible causes	Repair
	- The shaft of the brush drive is rusted.	The shaft of the brush must be cleaned and oiled.
	- The brush position and the brush cover is adjusted wrong – with the brush cannot be turned.	The brush cover must be posed, in order to the brush can be turned.
12. The saw arm periodically rise and fall during the cut; this cause short lifetime of the saw band.	- Backslash in driving wheel lodgement on the shaft.	Change the driving shaft for a long one, new bearings, distance ring, new driving wheel, spring, two covers on the forehead of the shaft + screws.
	- Worn channel for spring.	

5.2. Electric and hydraulic problems

Problem	Possible causes	Repair
1. Machine is not possible start.	- In socket is not voltage	Line voltage must be checked.
	- Transfer relay is closed (thermal protector)	Each FA relay must be checked.
	- Limit switch of saw band stretching, cover of frame or cover of saw band is not started.	Check of saw band stretching and covers closing.
2. When cut is finished, the frame is not raising.	- Bottom limit switch is adjusted wrong.	Bottom limit switch must be adjusted according to chapter ADJUSTING.
	- In hydraulic (pneumatic) ring is error. HYTOS (BOSCH) is not acting to frame uplift.	Function of magnetic valve must be checked, valve must be closed, voltage of clamps and inductor must be checked.
3. Electric motor and pump are without voltage. Between contactor and thermal protector is not voltage.	- Wrong contactor.	Replace contactor of engine.
4. The indicator of speed saw band is not functional.	- Sensor of speed is not adjusted.	Sensor of speed must be adjusted.
	- Defective display	The display must be changed.
	- Wrong sensor – diode of indicator speed is not light.	Sensor must be changed and adjusted.
5. Protector is switched off from engine hydraulic aggregate MA3 sometimes.	- Into hydraulic system is high working pressure.	Service engineer must reduce the pressure in hydraulic system.
6. The hydraulic aggregate cannot be started	Auxiliary contact on thermo-relay FA1 is defective.	Replace the defective contact on motor starter FA1.
7. Hydraulic aggregate is switched on but the saw arm or the main vice is not functional	- Wrong connection of electrical supply. The electrical phases are connected conversely.	The phases must be switched. Only service engineer can do this.
8. Cooling is not active	Lack of cooling agent.	Fill the tank with cooling agent.
	- Thermal relay is defective	Change the thermal relay
	- Input hosepipe is broken or obstructed.	Check the cooling circuit and perhaps cleanse cooling system.
	- Cooling pump protection is defective	Check the protection of cooling pump if need change it.
	- Cooling pump is defective.	Replace the cooling pump.

5.3. Hydraulic problems

Problem	Possible causes	Repair
1. Hydrogenerator not supplying oil	• reverse rotation	Check the connections of each phase. Reconnect properly connection of the electrical phases.
	• shortage of oil in the tank	Add hydraulic oil
	• Oil viscosity does not correspond prescribed viscosity value	Change hydraulic oil.
	• Hydrogenerator malfunction	Call service
	• Wrong power supply connection.	Check the connections of each phase. Reconnect properly connection of the electrical phases.
2. Hydraulic oil contains bubbles	• Hydraulic circuit is not adequately deaerated	Make deaeration of hydraulic circuit.
	• Low oil level	Add hydraulic oil
	• the pump shaft seals damaged	Call service
3. Increased mechanical noise	• damaged joint drive	Call service
	• damaged or destroyed motor bearings	Call service
	• air intake	Check for leaks.
4. Low pressure, pump supplies oil	• problem in the safety valve	Wrong settings. Check the settings and adjust the safety valve.
	• pump wear	Call service
	• external or internal leakage	Call service
5. Hydrogenerator is seized	• damage by solid particles in oil	Make oil filtration, or call the service.
	• non-prescribed oil	Change hydraulic oil.
	• wrong type of oil	Change hydraulic oil.
	• exceeding the life of the pump	Call service
6. Overheating oil	• cooler malfunction	Check the cooler function or call service.
	• wear the pump, the energy is converted into heat	Call service
7. Hydraulic valve can not be readjusted	• electromagnet has no signal (voltage) - interrupted supply lines	Check again.
	• Electromagnet coil burnt	Replace coil – Call service.
	• spool valve sticking	Replace valve – Call service

Note:

Frequency Inverter
Do install the bandsaw machine at electrical Installation that corresponds recommended technical standards. We recommend to protect the machine using current protectores by characteristics U, able to compansate interchanges of rising current which escapes fromfilter of Frequency Inverter, so that additionalequipments to the machine will not be required than. We don't reccomend to protect a machine by a standard protector current, equipped by a smaller type under 100 mA. Standard used is 30 mA because of currnet escape in accordance of Frequency Inverters fitted on machine. Alternative soulutionshould be used currentprotector (FI) by sensitivity of 100 mA.

6. Schematics

6.1. Elektrické schéma / Elektroschema / Wiring diagrams – 3×400 V, PE+N, 50 Hz

Obsah/ Table of contents/ Inhaltsverzeichnis

Stránka/Page/Seite	Název stránky/Name page/Name Seite	Datum/Date/Datum
00	Úvodní strana/Start page/Startseite	14.1.2014
01	Obsah/ Table of contents/ Inhaltsverzeichnis	14.1.2014
02	Rozmístění prvků v rozvaděči RS1/ Placement of elements in enclosure RS1/ Platzierung der Elemente im Schaltschrank RS1	14.1.2014
03	Ovládací panel na rozvaděči/Control panel/Bedienpult	14.1.2014
04	Kusovník artiklů/ Parts list/ Artikelstückliste	14.1.2014
04.a	Kusovník artiklů/ Parts list/ Artikelstückliste	14.1.2014
04.b	Kusovník artiklů/ Parts list/ Artikelstückliste	14.1.2014
05	Silová část M1-M3 / Power part M1-M3 / Feld partie M1-M3	14.1.2014
05.a	Frekvenční měnič M4 / Speed controller M4/ Frequenzumrichte M4	14.1.2014
06	Deska zdroje/Power board/Netzgerat-Platte	14.1.2014
07	Stykače motorů, M5/Motor contactor, M5/Motor-Schutzschalter, M5	14.1.2014
08	Hydraulické ventily/Hydraulic valve/Hydroventil	14.1.2014
08.a	Hydraulické ventily/Hydraulic valve/Hydroventil	14.1.2014
09	Vstupy/Inputs/Eingange	14.1.2014
10	Tlačítka ovládací panel/Button control panel/Taste Bedienpult	14.1.2014
11	Bezpečnostní okruh/Safety circle/Sicherheitsbereich	14.1.2014
12	Řídící systém/Control system/Steuersystem	14.1.2014
13	Odměřování/Remuneration/Abmessung	14.1.2014
14	Příslušenství/Accessories/Zubehör	14.1.2014

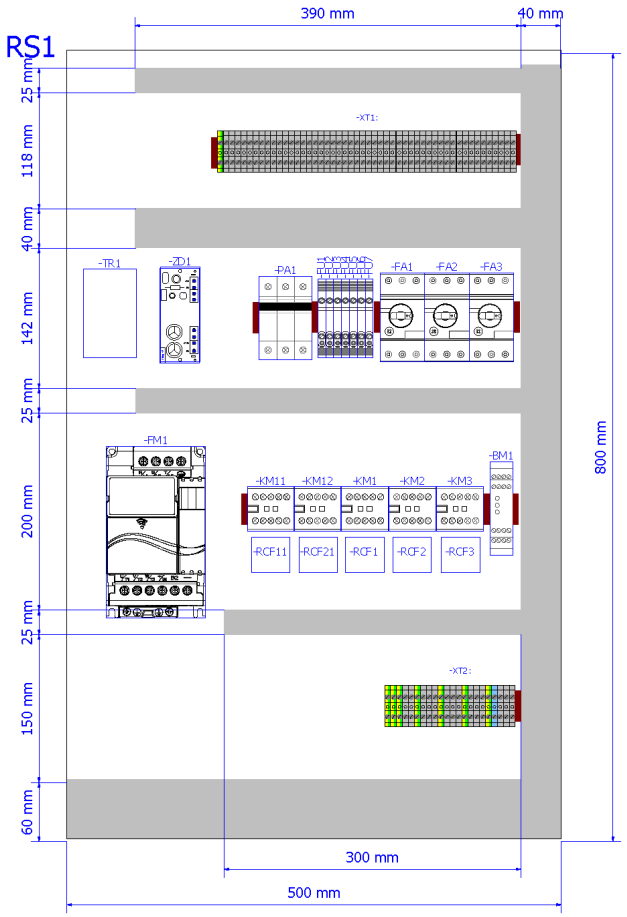

01

BOMAR, s.r.o. Těžební 1236/1 CZ 627 00, Brno	Stroj/Machine/Maschine: Proline 320.280 ANC	Název stránky/Name page/Name seiten: Rozmístění prvků v rozvaděči RS1/ Placement of elements in enclosure RS1/ Platzierung der Elemente im Schaltschrank RS1	Číslo dok./Doc.No/Anzahl der Dokumente.:	ES-R2000-201-V6.3	List/Page/Seite: 02
			Napájení/Power supply/Einspeinsung:	3x400V+N+PE, 50Hz	Listů/Pages/Seiten: 19
			Zpracoval/Processed /Hat verarbeitet:	Pavlík	
			Datum/Date/Datum:	14.1.2014	

VersionNo. 00.00.00

Schéma
Schemas
Schematics

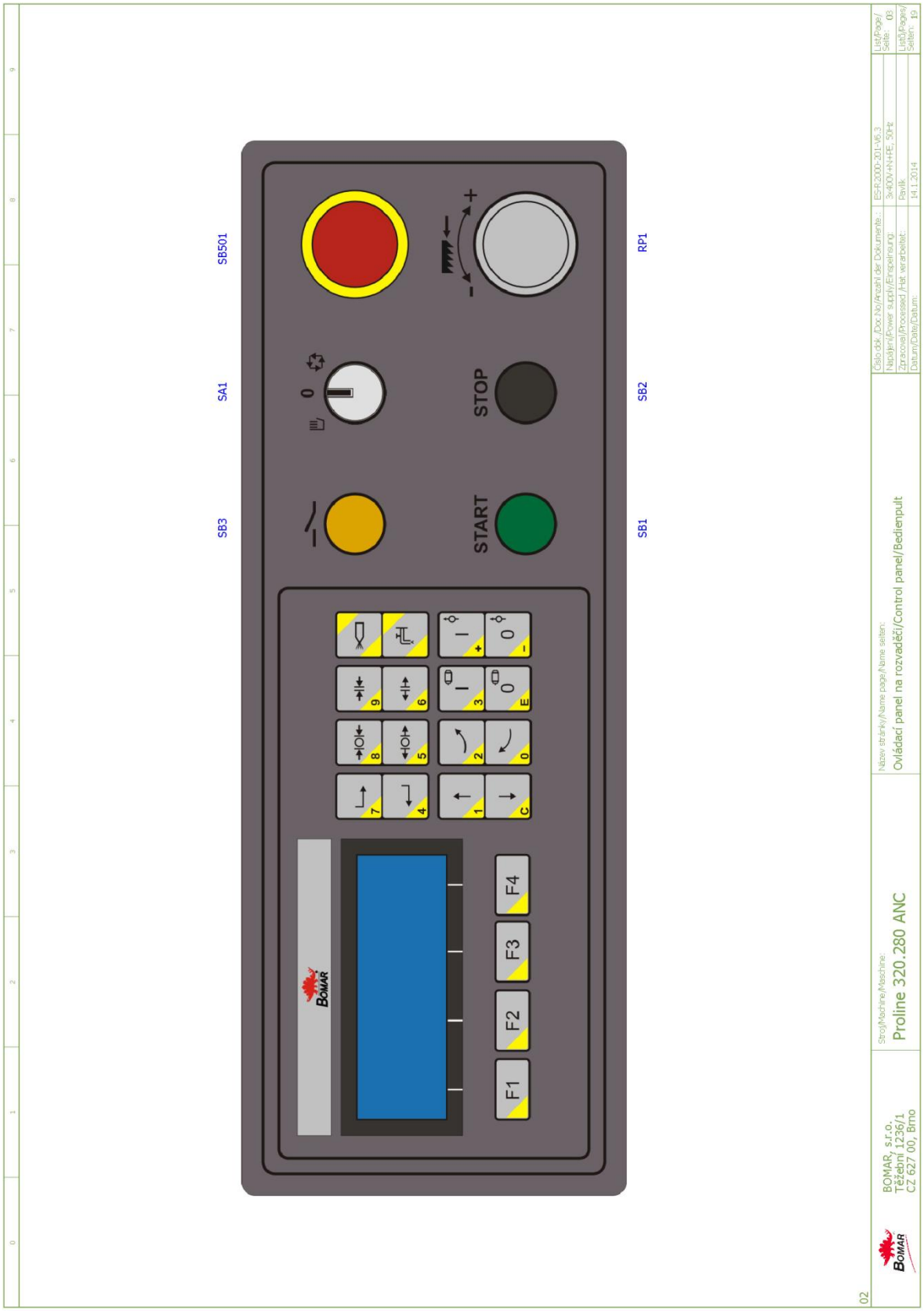
SB501
SA1
SB3
RP1
SB2
SB1
STOP
START
F1
F2
F3
F4
BOMAR, s.r.o.
Těžební 1236/1
CZ 627 00, Brno
Stroj/Machine/Maschine:
Proline 320.280 ANC
Název stránky/Name page/Name seiten:
Ovládací panel na rozvaděči/Control panel/Bedienpult
Číslo dok./Doc.No/Anzahl der Dokumente:
ES-R-2000-201-V6.3
Napájení/Power supply/Einspeiseung:
3x400V+N+PE, 50Hz
Zpracoval/Processed /Hat verarbeitet:
Pavlík
Datum/Date/Datum:
14.1.2014
List/Page/Seite: 03
List(i)/Pages/Seiten: 19
02

Parts list

Device identification	Device description	Type number	Manufacturer	Part number	Quantity	Location (page.column)
-ZD1	Power supply unit - 15VAC/24VDC; 20VAC/28VDC	ZDR-03	Bomar	265.915	1	/06.2
-CU1	Touch-sensitive keyboard	31.R230-207	AKI ELECTRONIC,spol.s.r.o.	31.R230-207	1	/12.0
-FA1	Auxiliary Contact Block - 1xNO+1xNC	HKF1-11	ABB	91.046.002	1	/05.3
-FA2	Auxiliary Contact Block - 1xNO+1xNC	HKF1-11	ABB	91.046.002	1	/05.5
-FA3	Auxiliary Contact Block - 1xNO+1xNC	HKF1-11	ABB	91.046.002	1	/05.7
-HL1	Green light for Eaton adapter	M22-LED-G	EATON	91.061.023	1	/08.a.5
-HL2	White light for Eaton adapter	M22-LED-W	EATON	91.061.034	1	/11.7
-SA1	Head of 3 positional switch	M22-WRK3	EATON	91.060.051	1	/10.5
-SB1	Green translucent switch head	M22-DL-G	EATON	91.060.031	1	/10.2
-SB3	Yellow translucent switch head	M22-DL-Y	EATON	91.060.053	1	/11.3
-SN1	Lineare incrementa encoder - 10-30VDC/5V TTL line driver	LMIX2-026-08.0-1-01	ELGO	91.270.006	1	/13.4
-FU1	Tube fuse - 2A/250V, slow, 5x20	T2A/250V	ESKA	91.230.001	1	/06.1
-FU2	Tube fuse - 2A/250V, slow, 5x20	T2A/250V	ESKA	91.230.001	1	/06.1
-FU3	Tube fuse - 500mA/250V, slow, 5x20	T500mA/250V	ESKA	91.230.011	1	/06.5
-FU6	Tube fuse - 6,3A/250V, slow, 5x20	T6,3A/250V	ESKA	91.230.002	1	/06.5
-RP1	Potenciometr 4k7	TP195 4k7/N20A	GES-ELECTRONICS, a.s.	91.283.015	1	/05.a.6
-RP1	Potentiometer knob - 24mm	S8877 BLK	GES-ELECTRONICS, a.s.	91.060.063	1	/05.a.6
-RCF1	RCF filter	FBOPR1624	Ing. Miroslav Vlček	91.041.015	1	/05.2
-RCF2	RCF filter	FBOPR1624	Ing. Miroslav Vlček	91.041.015	1	/05.4
-RCF3	RCF filter	FBOPR1624	Ing. Miroslav Vlček	91.041.015	1	/05.6
-RCF11	RCF filter	FBOPR1624	Ing. Miroslav Vlček	91.041.015	1	/05.a.1
-RCF21	RCF filter	FBOPR1624	Ing. Miroslav Vlček	91.041.015	1	/05.a.1
-BM1	Safety relay - 3xNO	CS AR-02M024	PIZZATO	91.051.034	1	/11.5
-FA1	Manual motor starter - 0.4A	MS116-0,4	ABB	91.045.017	1	/05.3
-FA2	Manual motor starter - 1A	MS116-1,00	ABB	91.045.019	1	/05.5
-FA3	Manual motor starter - 4A	MS116-4,0	ABB	91.045.022	1	/05.7
-FU1	Fuse terminal	WK4/THSi5U	WIELAND	91.251.102	1	/06.1
-FU2	Fuse terminal	WK4/THSi5U	WIELAND	91.251.102	1	/06.1

The manufacturer reserves right to use an equivalent replacement device.

Parts list

Device identification	Device description	Type number	Manufacturer	Part number	Quantity	Location (page.column)
-FU3	Fuse terminal	WK4/THSi5U	WIELAND	91.251.102	1	/06.5
-FU4	Fuse terminal	WK4/THSi5U	WIELAND	91.251.102	1	/06.5
-FU4	Tube fuse - 800mA/250V, slow, 5x20	T800mA/250V	ESKA	91.230.010	1	/06.5
-FU5	Fuse terminal	WK4/THSi5U	WIELAND	91.251.102	1	/06.5
-FU5	Tube fuse - 1A/250V, slow, 5x20	T1A/250V	ESKA	91.230.031	1	/06.5
-FU6	Fuse terminal	WK4/THSi5U	WIELAND	91.251.102	1	/06.5
-FU7	Tube fuse - 200mA/250V, slow, 5x20	T200mA/250V	ESKA	91.230.037	1	/14.1
-FU7	Fuse terminal	WK4/THSi5U	WIELAND	91.251.102	1	/14.1
-KM1	Minicontactor - 4kW/400V, 3P	B6S-30-01-1.7-71	ABB	91.040.049	1	/07.2
-KM2	Minicontactor - 4kW/400V, 3P	B6S-30-01-1.7-71	ABB	91.040.049	1	/07.4
-KM3	Minicontactor - 4kW/400V, 3P	B6S-30-01-1.7-71	ABB	91.040.049	1	/07.5
-KM11	Minicontactor - 4kW/400V, 3P	B6S-30-01-1.7-71	ABB	91.040.049	1	/11.7
-KM12	Minicontactor - 4kW/400V, 3P	B6S-30-01-1.7-71	ABB	91.040.049	1	/11.8
-PA1	Fuse switch disconnector E-90 - 3P	E 93/32	ABB	91.241.014	1	/05.a.2
-QS1	Handle switch - black	OHBS2RJ	ABB	91.180.015	1	/05.0
-RP1	Fastconnect clamp	WAGO 224-112	WIELAND	91.250.009	3	/05.a.6
-SA1	Attaching adapter + 1NO	M22-AK10	EATON	91.061.021	1	/10.5
-SA1	NO contact for Eaton adapter	M22-K10	EATON	91.061.022	1	/10.5
-SB1	Attaching adapter + 1NO	M22-AK10	EATON	91.061.021	1	/10.2
-SB2	Attaching adapter + 1NO	M22-AK10	EATON	91.061.021	1	/10.3
-SB2	Switch head - black	M22-D-S	EATON	91.060.035	1	/10.3
-SB3	Attaching adapter + 1NO	M22-AK10	EATON	91.061.021	1	/11.3
-SB501	Emergency-stop mushroom push - button + 3xNC	YW1B-V4E02R	IDEC	91.060.084	1	/11.1
-TR1	Toroidal transformer - 0-230-400V/20V/15V, 0.65-0.38A/6A/2A, 150VA	1502304002015	KARBAN s.r.o.	91.080.026	1	/06.1
-SQ8	Safety limit switch - 2xNC	QKS8	KEDU	91.173.012	1	/11.1
-PA1	Cylindric fuse - 8A, 10x38 fast, gG charakteristic	PV10 8A gG	OEZ	91.231.003	3	/05.a.2
-SQ3	Limit switch - 1NC+1NO	D4N-4A31	OMRON	91.173.007	1	/09.2
-SQ4	Limit switch - 1NO + 1NC, roller, M2, snap action	FR 605-M2	PIZZATO	91.173.009	1	/09.3

The manufacturer reserves right to use an equivalent replacement device.

04

BOMAR, s.r.o.
Těžební 1236/1
CZ 627 00, Brno

Stroj/Machine/Maschine: Proline 320.280 ANC

Název stránky/Name page/Name seiten: Kusovník artiklů/ Parts list/ Artikelstückliste

Číslo dok./Doc.No/Anzahl der Dokumente.:	ES-R2000-201-V6.3	List/Page/Seite: 04.a
Napájení/Power supply/Einspeisung:	3x400V+N+PE, 50Hz	
Zpracoval/Processed /Hat verarbeitet:	Pavlik	Listů/Pages/Seiten: 19
Datum/Date/Datum:	14.1.2014	

Parts list

Device identification	Device description	Type number	Manufacturer	Part number	Quantity	Location (page.column)
-SQ5	Limit switch - 1NO + 1NC, roller, M2, snap action	FR 605-M2	PIZZATO	91.173.009	1	/09.4
-SQ6	Limit switch - 1NO + 1NC	FR 615-M2	PIZZATO	91.173.044	1	/09.5
-SQ7	Limit switcher - 1NO + 1NC, large adjustable roller, M2, snap action	FR 655-M2	PIZZATO	91.173.045	1	/09.6
-LQ1.A	Sensor cable	MOD.14/4 M12 SL LC10	SICK	91.142.001	1	/09.7
-LQ1.B	Sensor cable	MOD.15/4 M12 SL LC10	SICK	91.142.002	1	/09.8
-QS1	Disconnector - 3P, 16A	OT16FT3	ABB	91.170.018	1	/05.0
-CU1	Control circuit	PRO-5.X	Bomar	265.917	1	/12.0
-FM1	AC motor drive - 2.2kW, 3x400VAC	VFD022EL43A	DELTA ELECTRONICS, INC.	91.012.123	1	/05.a.2
-M5	Fan 24VDC, 154CFM	RDH1238 B2	Xinruilian Electronic Co.	91.015.126	1	/07.7
-QS1	Terminal shroud	OTS40T3	ABB	91.170.017	1	/05.0

The manufacturer reserves right to use an equivalent replacement device.

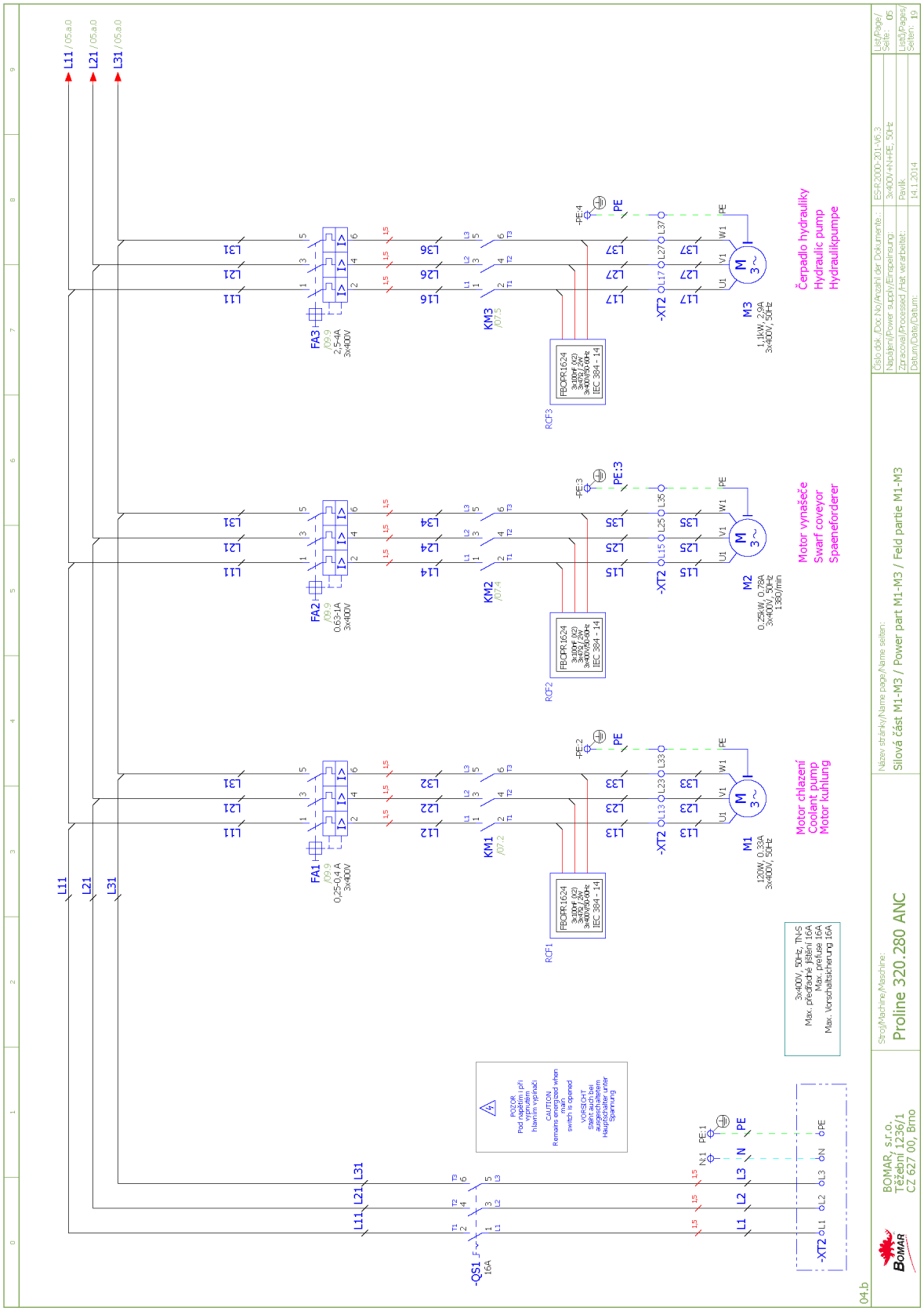
L11 / 05.a.0
L21 / 05.a.0
L31 / 05.a.0
FA1
/09.9
0,25-0,4 A
3x400V
FA2
/09.9
0,63-1A
3x400V
FA3
/09.9
2,5-4A
3x400V
KM1
/07.2
KM2
/07.4
KM3
/07.5
RCF1
RCF2
RCF3
FBQR1624
3x100F (X2)
3x70V (2X)
3x4kV/50kHz
IEC 384 - 14
-XT2
M1
120W, 0,33A
3x400V, 50Hz
M2
0,25kW, 0,79A
3x400V, 50Hz
1380/min
M3
1,1kW, 2,9A
3x400V, 50Hz
Motor chlazení
Coolant pump
Motor kuhlung
Motor vynašeče
Swarf coveyor
Spaenefoerderer
Čerpadlo hydrauliky
Hydraulic pump
Hydraulikpumpe
-Q51
F
16A
-XT2
PE:1
PE:2
PE:3
PE:4
3x400V, 50Hz, TN-S
Max. předchozí jištění 16A
Max. previous protection 16A
Max. Vorsicherung 16A
CAUTION
Remains energized when main switch is opened
VORSICHT
Bleibt auch bei geöffnetem Hauptschalter unter Spannung
Číslo dok./Doc.No/Arzahl der Dokumente:: ES-R-2000-201-V6.3
Napájení/Power supply/Einspeisung: 3x400V+N+PE, 50Hz
Zpracoval/Processed /Hat verarbeitet: Pavlik
Datum/Date/Datum: 14.1.2014
List/Page/Seite: 05
List(Pages/Seiten: 19
Název stránky/Name page/Name seiten:
Silová část M1-M3 / Power part M1-M3 / Feld partie M1-M3
Stroj/Machine/Maschine:
Proline 320.280 ANC
BOMAR, s.r.o.
Těžební 1236/1
CZ 627 00, Brno
04.b

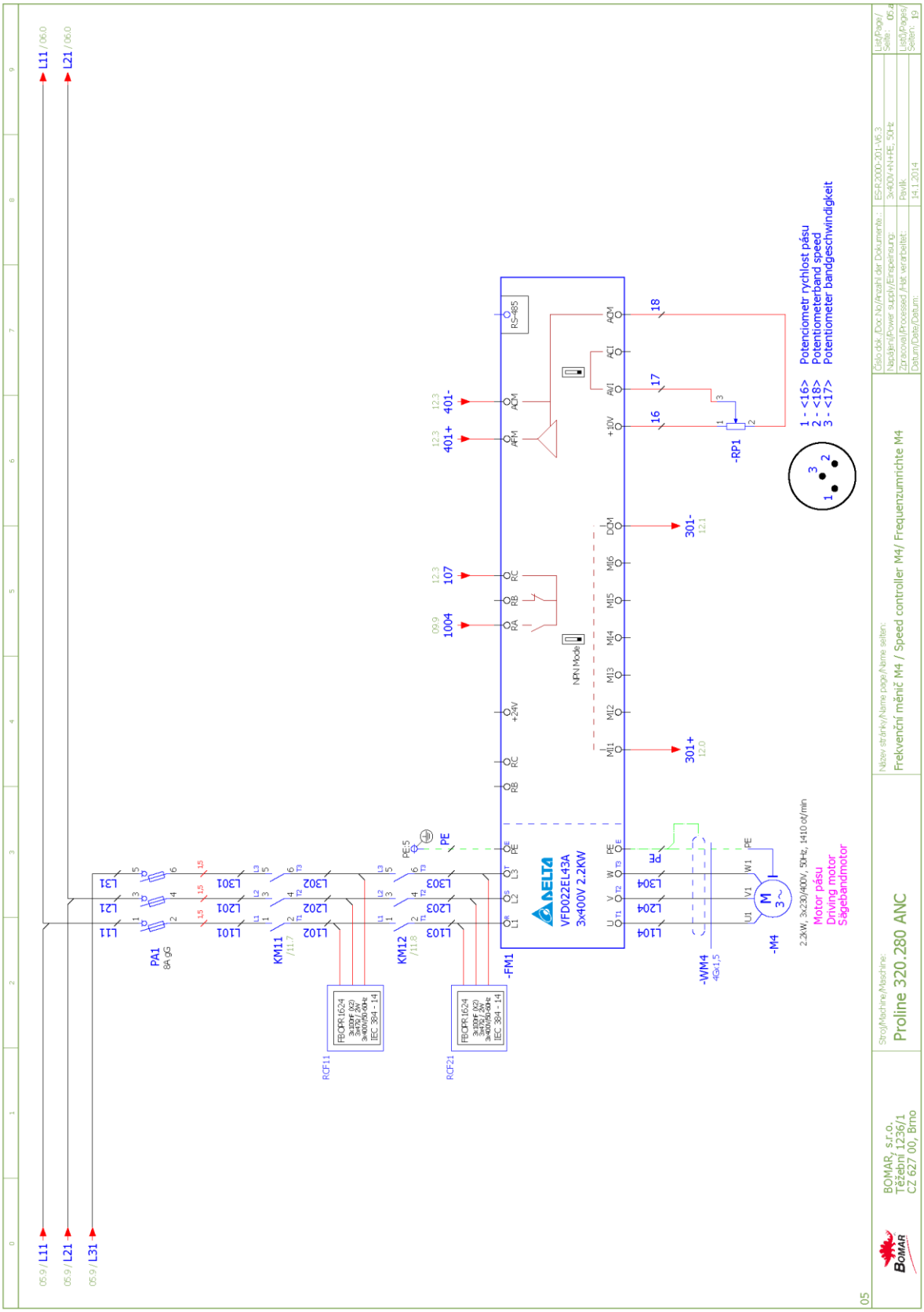

Schémata
Schemas
Schematics

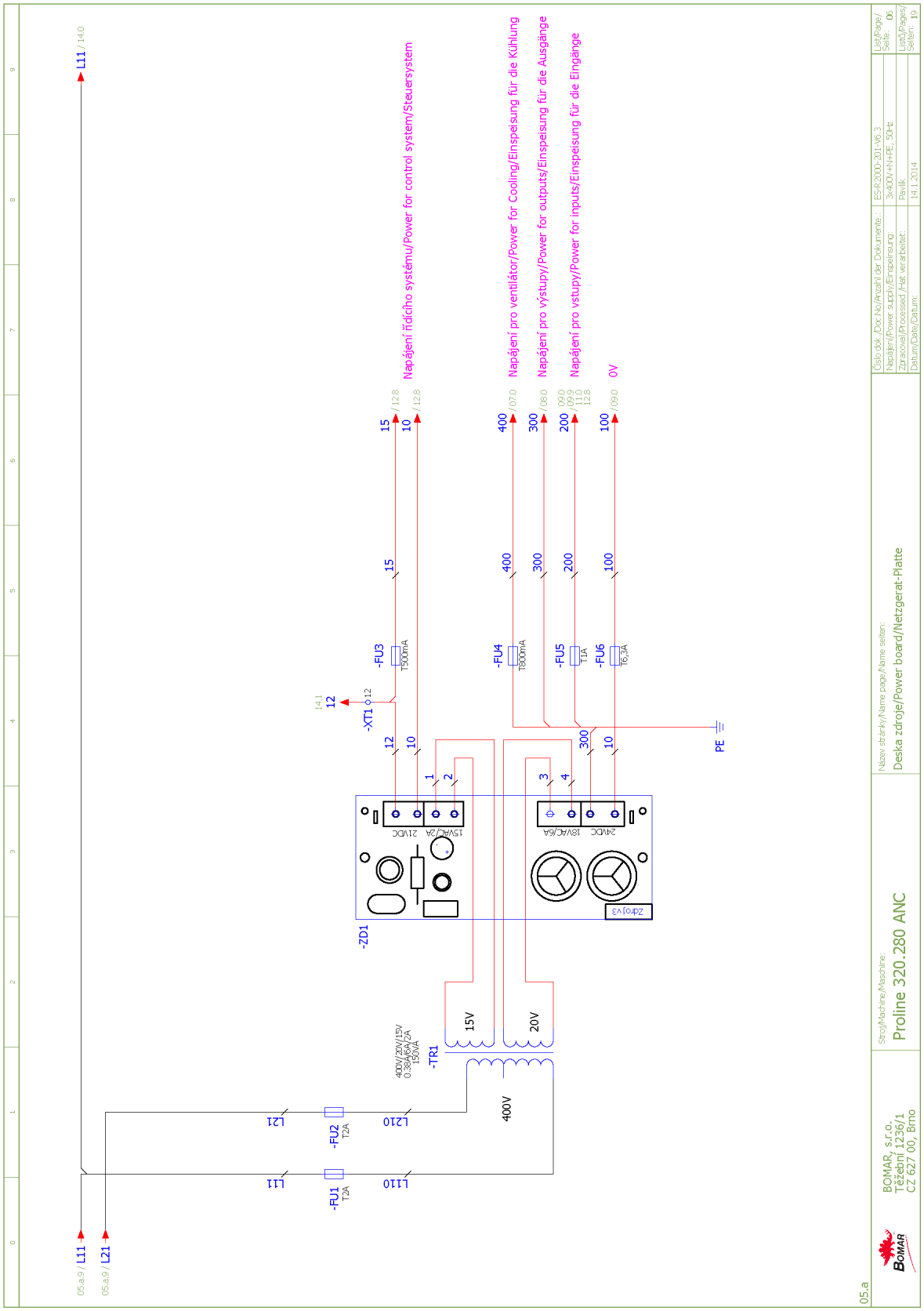
L11 / 14.0
Napájení řídicího systému/Power for control system/Steuersystem
Napájení pro ventilátor/Power for Cooling/Einspeisung für die Kühlung
Napájení pro výstupy/Power for outputs/Einspeisung für die Ausgänge
Napájení pro vstupy/Power for inputs/Einspeisung für die Eingänge
0V
-FU3
T500mA
-FU4
T500mA
-FU5
T1A
-FU6
T6,3A
-XT1
-ZD1
Zdroj v3
-TR1
400V/230V/15V
0.38A/6A/2A
150VA
15V
20V
400V
-FU1
T2A
-FU2
T2A
L11
L21
L110
L210
PE
05.a.9 / L11
05.a.9 / L21
BOMAR, s.r.o.
Těžební 1236/1
CZ 627 00, Brno
Stroj/Machine/Maschine:
Proline 320.280 ANC
Název stránky/Name page/Name seiten:
Deska zdroje/Power board/Netzgerat-Platte
Číslo dok./Doc.No/Anzahl der Dokumente:
ES-R.2000-201-V6.3
Napájení/Power supply/Einspeisung:
3x400V+N+PE, 50Hz
Zpracoval/Processed /Hat verarbeitet:
Pavlík
Datum/Date/Datum:
14.1.2014
List/Page/Seite: 06
List/Pages/Seiten: 19
05.a

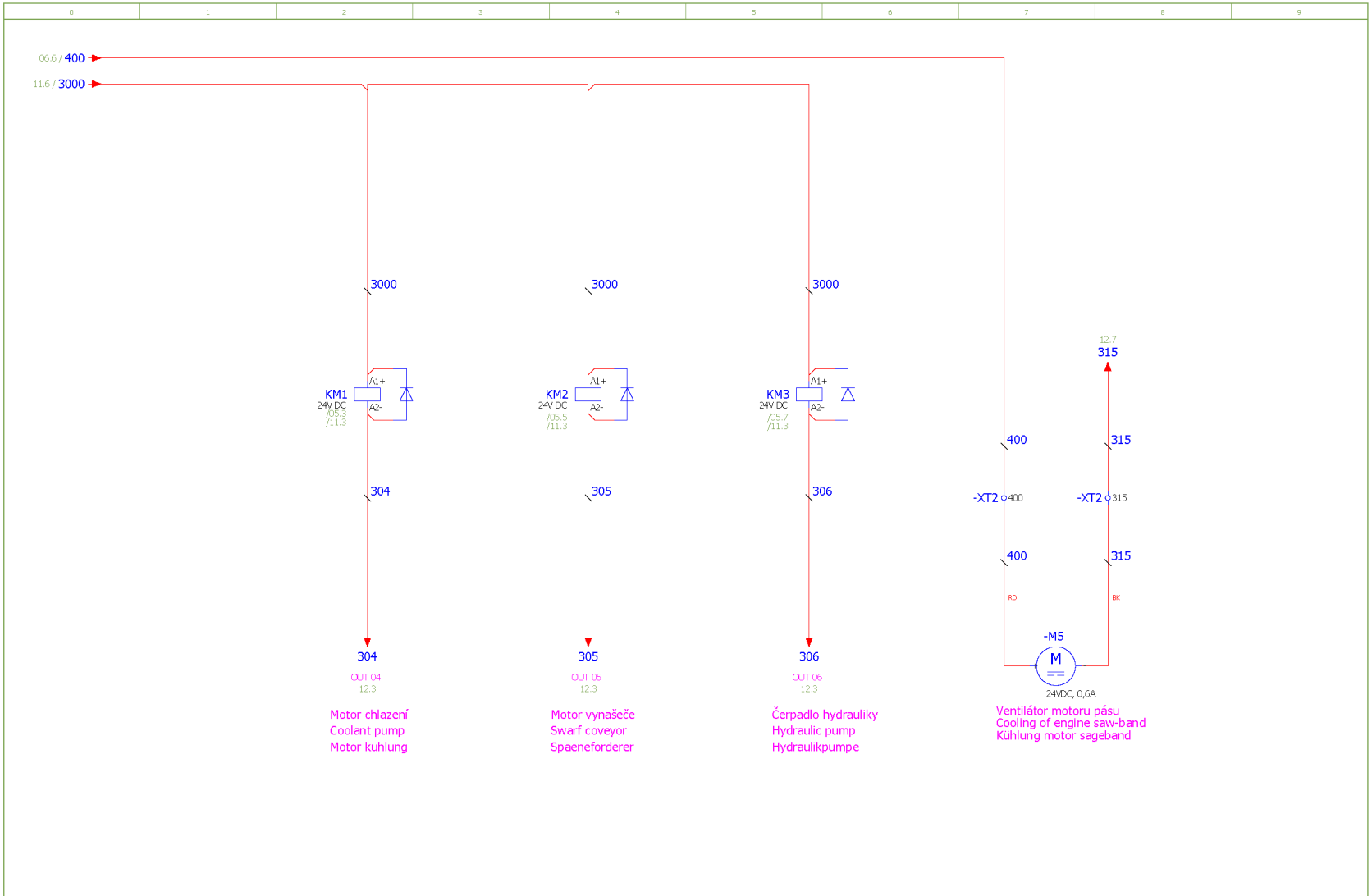

06

BOMAR, s.r.o. Těžební 1236/1 CZ 627 00, Brno	Stroj/Machine/Maschine: Proline 320.280 ANC	Název stránky/Name page/Name seiten: Stykače motorů, M5/Motor contactor, M5/Motor-Schutzschalter, M5	Číslo dok./Doc.No/Anzahl der Dokumente.: ES-R2000-201-V6.3 Napájení/Power supply/Einspeinsung: 3x400V+N+PE, 50Hz Zpracoval/Processed /Hat verarbeitet: Pavlik Datum/Date/Datum: 14.1.2014	List/Page/Seite: 07 Listů/Pages/Seiten: 19

VersionNo. 00.00.00

Schéma
Schemas
Schematics

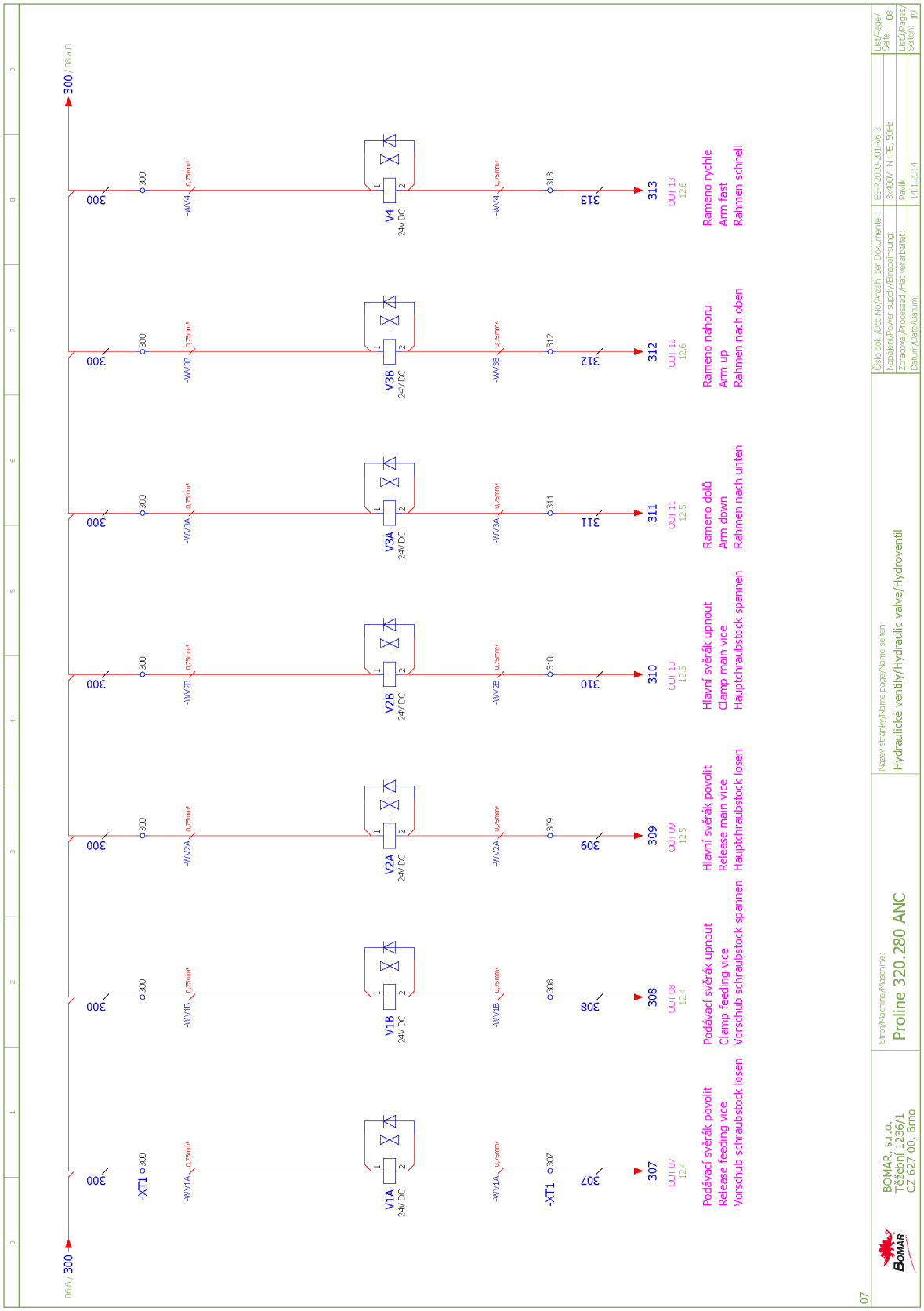
06.6 / 300
300 / 08.a.0
-XT1
V1A 24V DC
V1B 24V DC
V2A 24V DC
V2B 24V DC
V3A 24V DC
V3B 24V DC
V4 24V DC
307
308
309
310
311
312
313
Podávací svěrák povolit
Release feeding vice
Vorschub schraubstock losen
Podávací svěrák upnout
Clamp feeding vice
Vorschub schraubstock spannen
Hlavní svěrák povolit
Release main vice
Hauptchraubstock losen
Hlavní svěrák upnout
Clamp main vice
Hauptchraubstock spannen
Rameno dolů
Arm down
Rahmen nach unten
Rameno nahoru
Arm up
Rahmen nach oben
Rameno rychle
Arm fast
Rahmen schnell
BOMAR, s.r.o.
Těžební 1236/1
CZ 627 00, Brno
Proline 320.280 ANC
Hydraulické ventily/Hydraulic valve/Hydroventil
E5-R.2000-201-V6.3
3x400V+N+PE, 50Hz
Pavlík
14.1.2014
08
19
07

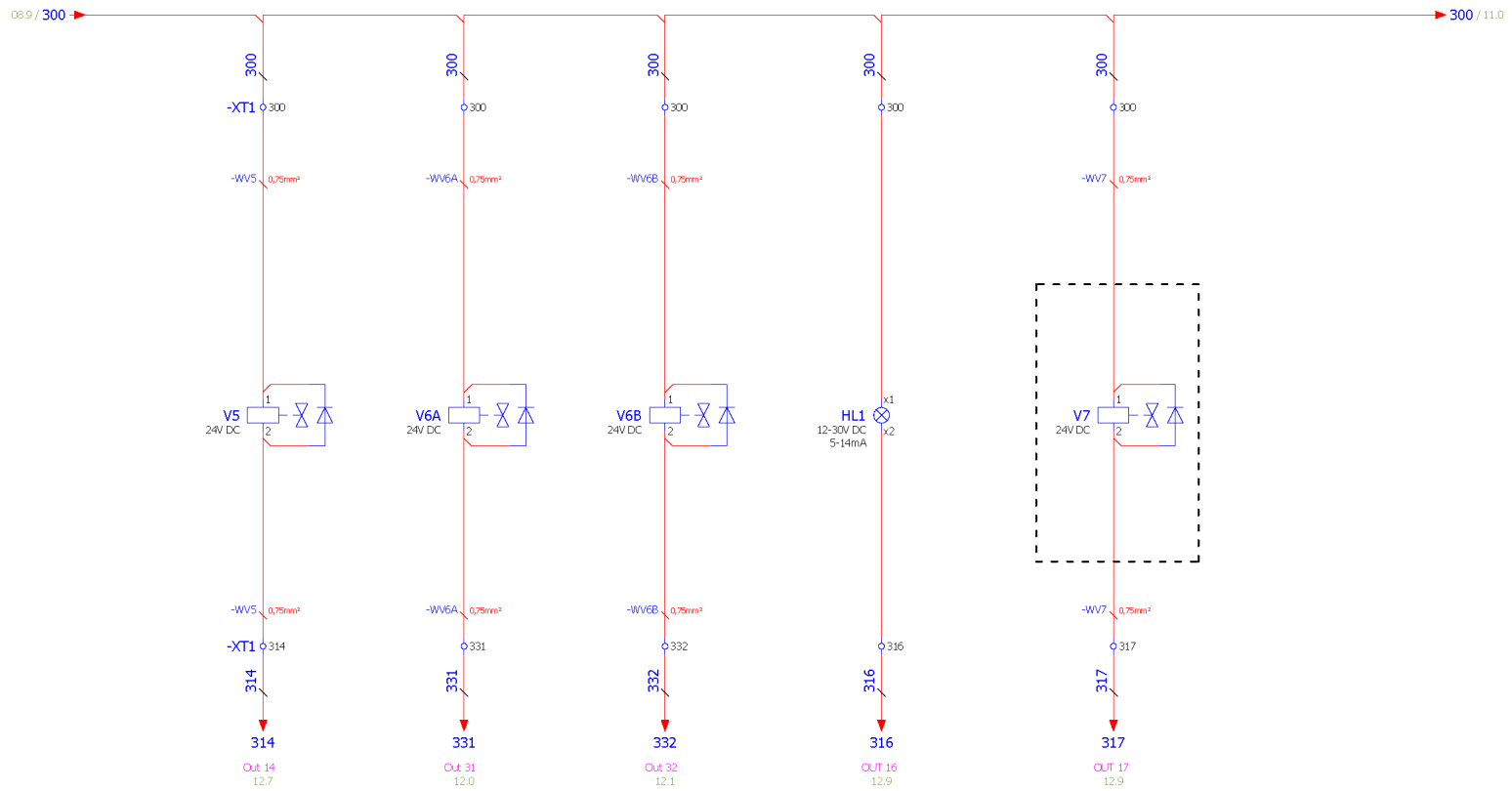

08

BOMAR, s.r.o. Těžební 1236/1 CZ 627 00, Brno	Stroj/Machine/Maschine: Proline 320.280 ANC	Název stránky/Name page/Name seiten: Hydraulické ventily/Hydraulic valve/Hydroventil	Číslo dok./Doc.No/Anzahl der Dokumente.: ES-R2000-201-V6.3 Napájení/Power supply/Einspeinsung: 3x400V+N+PE, 50Hz Zpracoval/Processed /Hat verarbeitet: Pavlik Datum/Date/Datum: 14.1.2014	List/Page/Seite: 08.a Listů/Pages/Seiten: 19

VersionNo. 00.00.00

Schéma
Schemas
Schematics

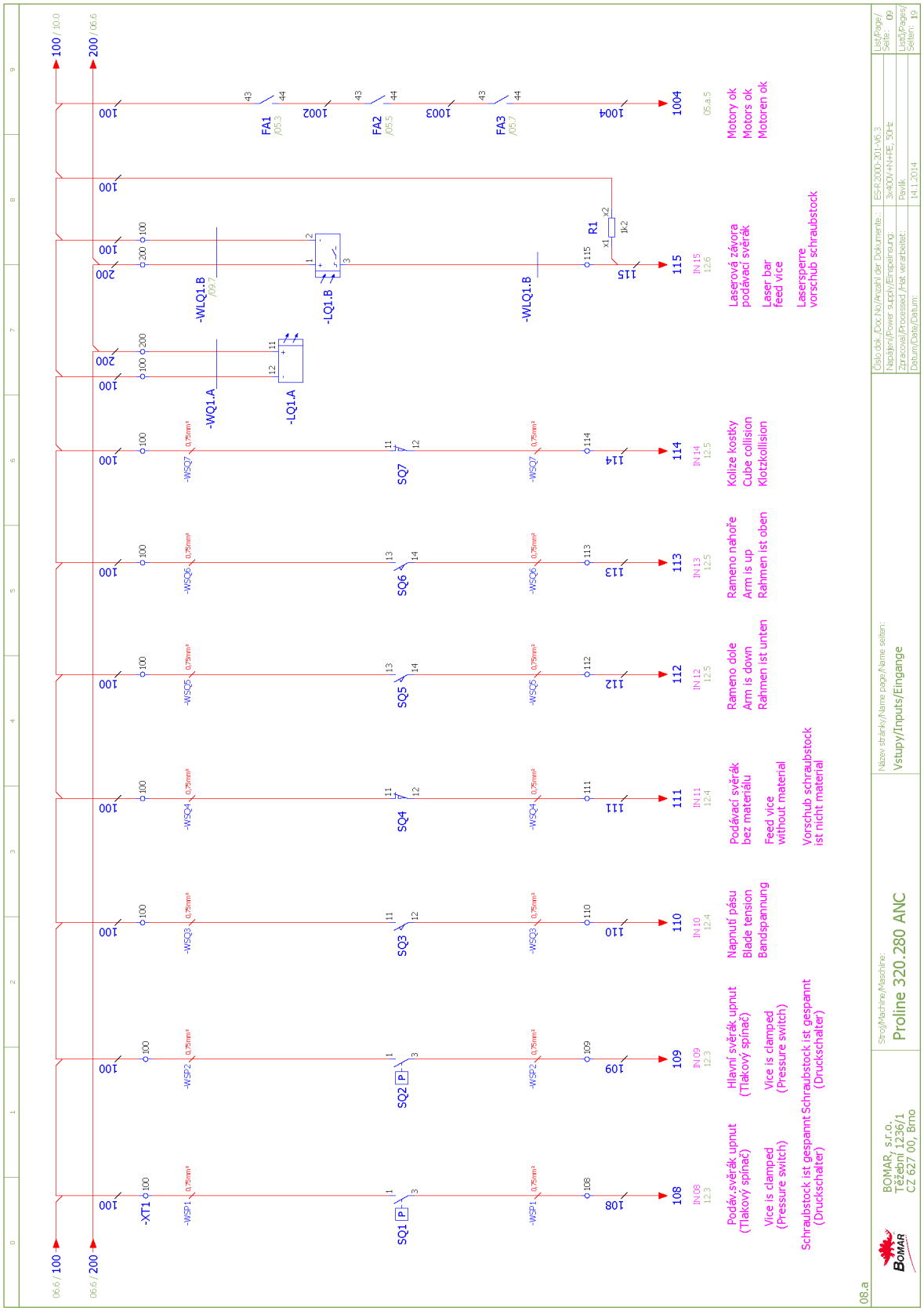
Podáv.svěrák upnut (Tlákový spínač)
Vice is clamped (Pressure switch)
Schraubstock ist gespannt (Druckschalter)
Hlavní svěrák upnut (Tlákový spínač)
Vice is clamped (Pressure switch)
Schraubstock ist gespannt (Druckschalter)
Napnutí pásu
Blade tension
Bandspannung
Podávací svěrák bez materiálu
Feed vice without material
Vorschub schraubstock ist nicht material
Rameno dole
Arm is down
Rahmen ist unten
Rameno nahoře
Arm is up
Rahmen ist oben
Kolize kostky
Cube collision
Klotzkollision
Laserová závora podávací svěrák
Laser bar feed vice
Laserspere vorschub schraubstock
Motory ok
Motors ok
Motoren ok
BOMAR, s.r.o.
Těžební 1236/1
CZ 627 00, Brno
Stroj/Machine/Maschine:
Proline 320.280 ANC
Název stránky/Name page/Name seiten:
Vstupy/Inputs/Eingange
Číslo dok./Doc. No./Anzahl der Dokumente:
ES-R.2000-201-V6.3
Napájení/Power supply/Einspeisung:
3x400V+N+PE, 50Hz
Zpracoval/Processed / Hat verarbeitet:
Pavlík
Datum/Date/Datum:
14.1.2014
List/Page/Seite: 09
List5/Pages/Seiten: 19
08.a

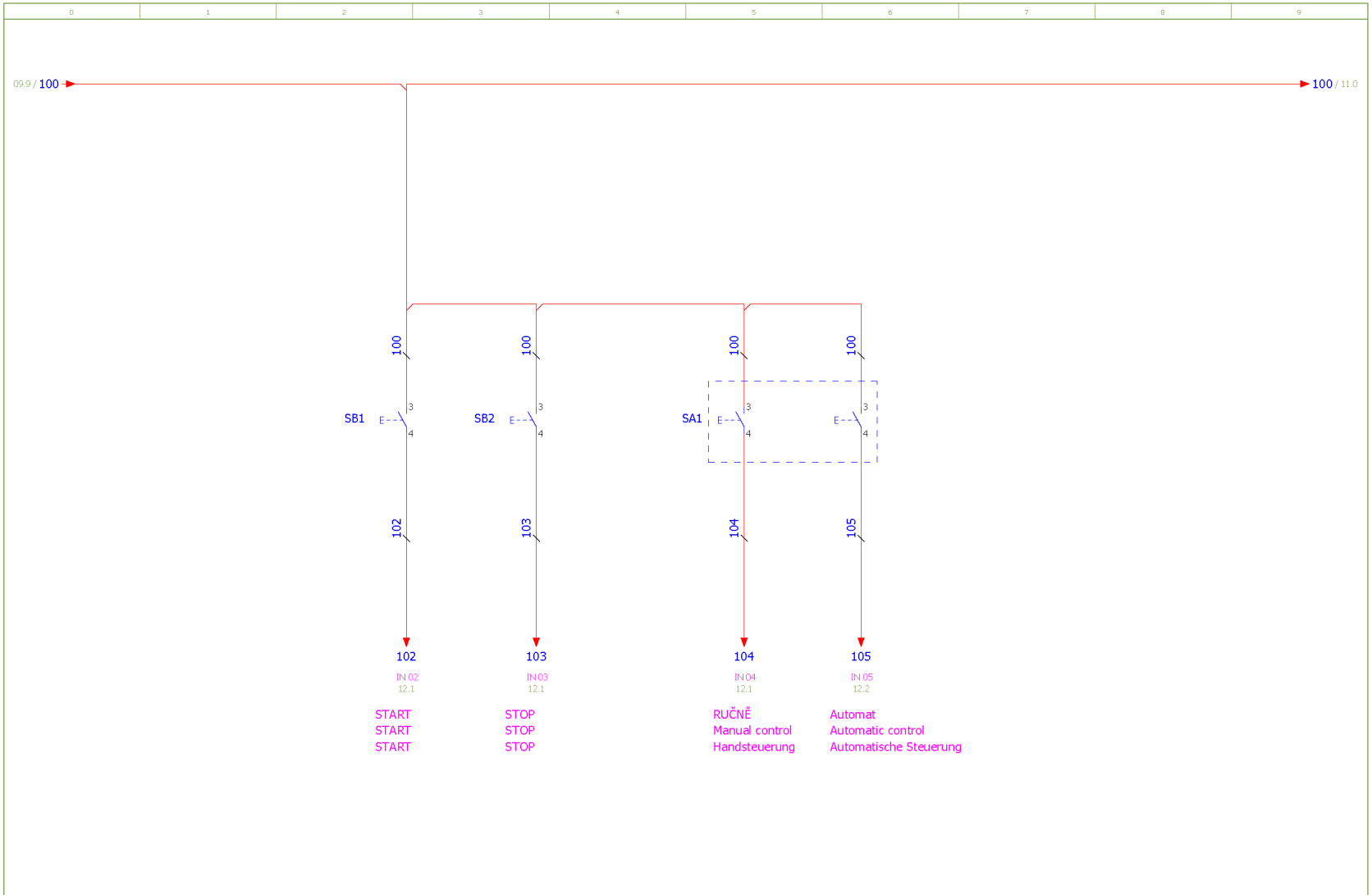

09

BOMAR, s.r.o. Těžební 1236/1 CZ 627 00, Brno	Stroj/Machine/Maschine: Proline 320.280 ANC	Název stránky/Name page/Name seiten: Tlačítka ovládací panel/Button control panel/Taste Bedienpult	Číslo dok./Doc.No/Anzahl der Dokumente.:	ES-R.2000-201-V6.3	List/Page/Seite: 10
			Napájení/Power supply/Einspeinsung:	3x400V+N+PE, 50Hz	Listů/Pages/Seiten: 19
			Zpracoval/Processed /Hat verarbeitet:	Pavlik	
			Datum/Date/Datum:	14.1.2014	

VersionNo. 00.00.00

Schéma
Schemas
Schematics

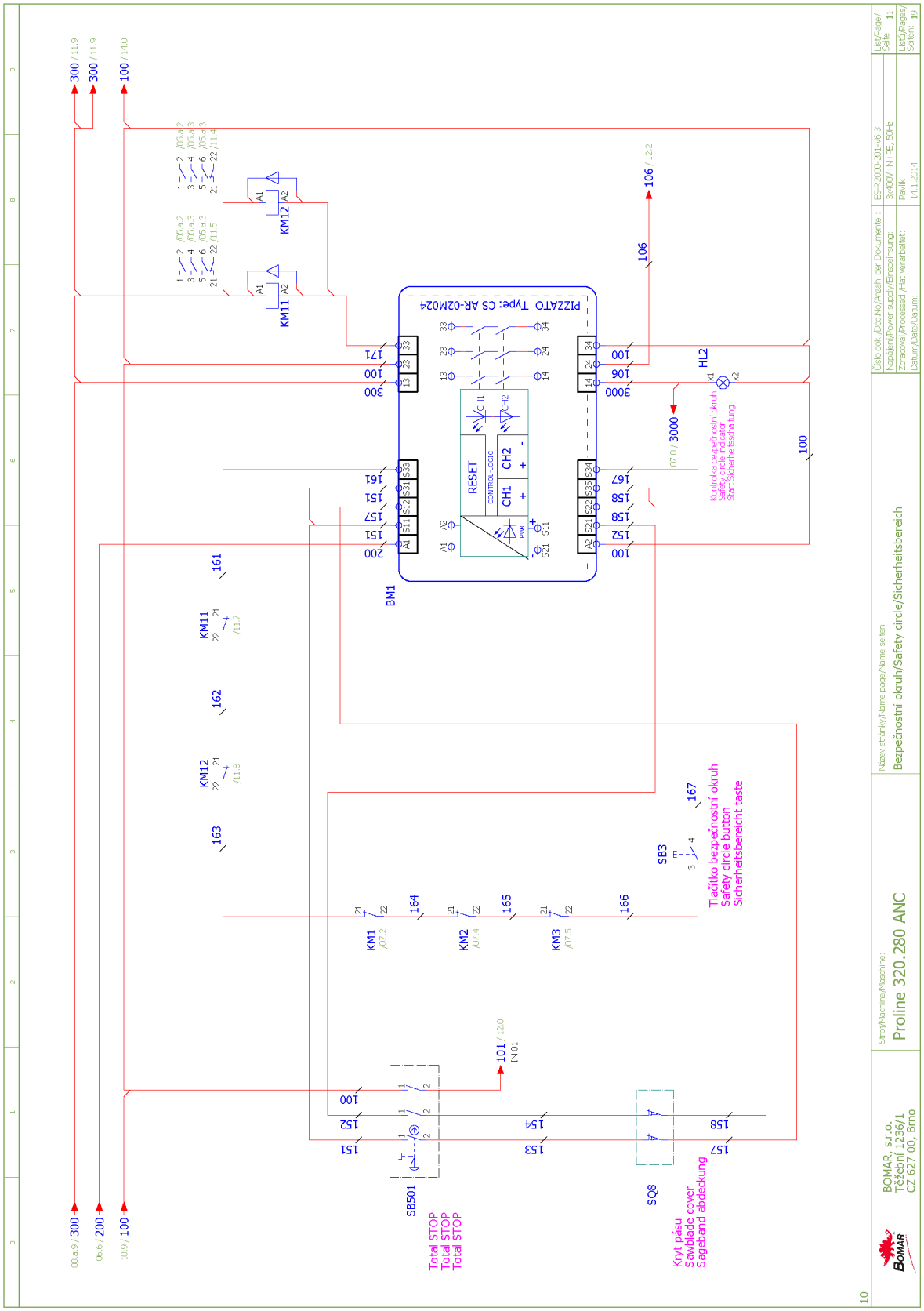
Číslo dok./Doc.No/Anzahl der Dokumente:
ES-R 2000-201-V6.3
Napájení/Power supply/Einspeisung:
3x400V+N+PE, 50Hz
Zpracoval/Processed /Hat verarbeitet:
Pavlík
Datum/Date/Datum:
14.1.2014
List/Page/Seite: 11
List/Pages/Seiten: 19
Název stránky/Name page/Name seiten:
Bezpečnostní okruh/Safety circle/Sicherheitsbereich
Stroj/Machine/Maschine:
Proline 320.280 ANC
BOMAR, s.r.o.
Těžební 1236/1
CZ 627 00, Brno
PIZZATO Type: CS AR-02M024
RESET
CONTROL LOGIC
CH1
CH2
BM1
KM11
KM12
KM1
KM2
KM3
SB3
SB501
SQ8
HL2
Tlačítko bezpečnostní okruh
Safety circle button
Sicherheitsbereicht taste
Total STOP
Total STOP
Total STOP
Kryt pásu
Sawblade cover
Sageband abdeckung
Kontrolka bezpečnostní okruh
Safety circle indicator
Start Sicherheitsschaltung
300 / 11.9
300 / 11.9
100 / 14.0
06.a.9 / 300
06.6 / 200
10.9 / 100
106 / 12.2
07.0 / 3000
101 / 12.0
IN 01

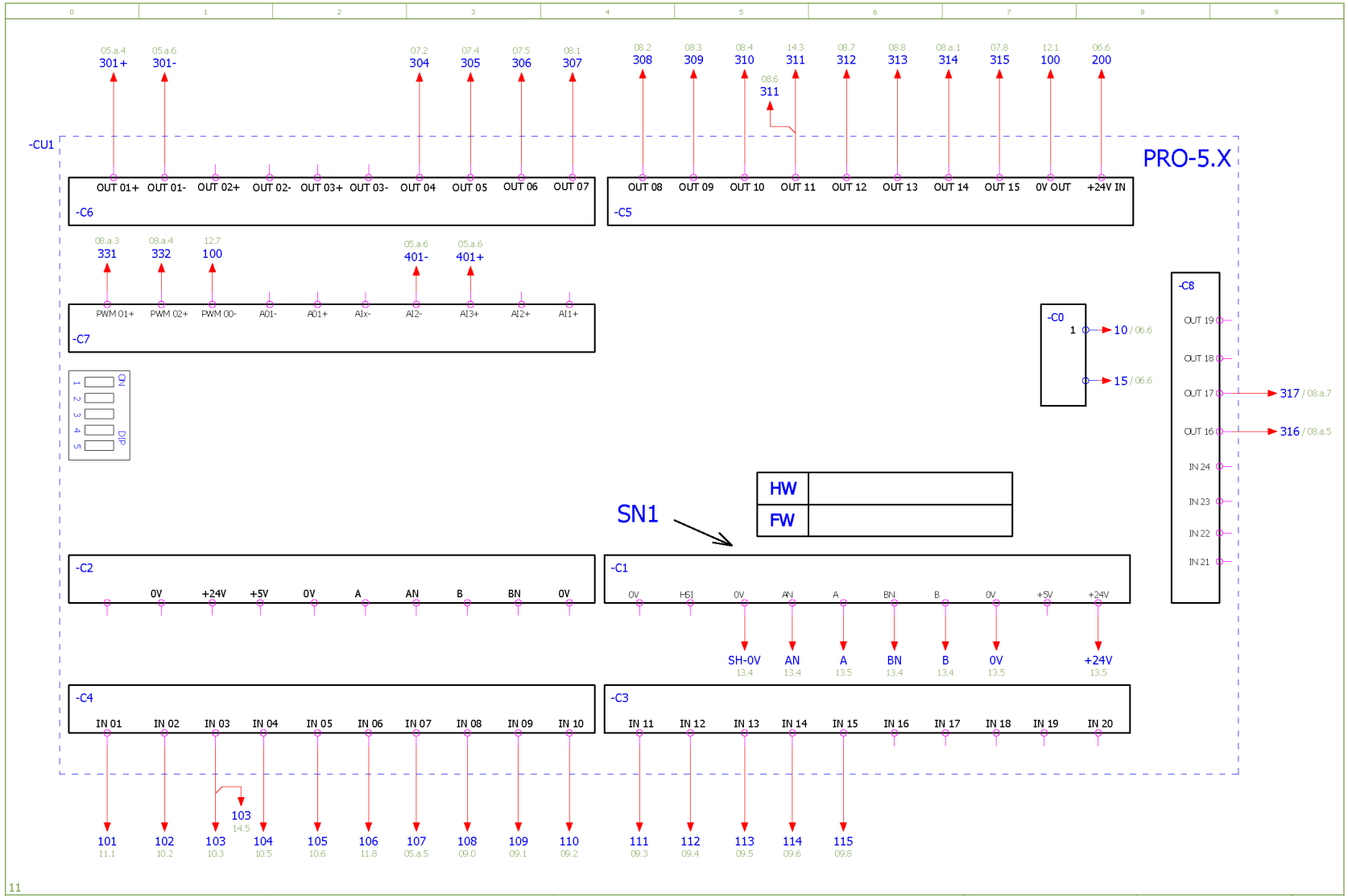

BOMAR, s.r.o. Těžební 1236/1 CZ 627 00, Brno	Stroj/Machine/Maschine: Proline 320.280 ANC	Název stránky/Name page/Name seiten: Řídící systém/Control system/Steuersystem	Číslo dok./Doc No/Anzahl der Dokumente.: ES-R2000-201-V6.3	List/Page/Seite: 12
			Napájení/Power supply/Einspeisung: 3x400V+N+PE, 50Hz	
			Zpracoval/Processed /Hat verarbeitet: Pavlik	Listů/Pages/Seiten: 19
			Datum/Date/Datum: 14.1.2014	

Schéma
Schemas
Schematics

VersionNo. 00.00.00

SN1		Kabel HELU-Flexi 7x0.14
+	HNĚDÁ BROWN BRAUN	HNĚDÁ+MODRÁ BROWN+BLUE BRAU+BLAU
-	BÍLÁ WHITE WEIS	HNĚDÁ/BÍLÁ+MODRÁ/BÍLÁ BROWN/WHITE+BLUE/WHITE BRAUN/WEIS+BLAU/WEIS
A	ZELENÁ GREEN GRÜN	ZELENÁ GREEN GRUN
AN	FIALOVÁ VIOLET VIOLET	ZELENÁ/BÍLÁ GREEN/WHITE GRUN/WEIS
B	ŽLUTÁ YELLOW GELB	ORANŽOVÁ ORANGE ORANGE
BN	ORANŽOVÁ ORANGE ORANGE	ORANŽOVÁ/BÍLÁ ORANGE/WHITE ORANGE/WEIS
	ČERNÁ BLACK SCHWARZ	STÍNĚNÍ SHIELD LEITUNGSSCHIRM

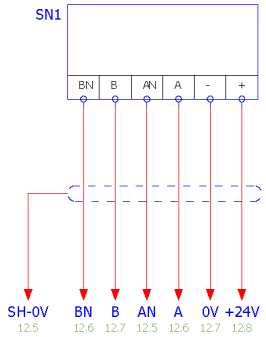

12

BOMAR, s.r.o. Těžební 1236/1 CZ 627 00, Brno	Stroj/Machine/Maschine: Proline 320.280 ANC	Název stránky/Name page/Name seiten: Odměřování/Remuneration/Abmessung	Číslo dok./Doc.No/Anzahl der Dokumente.: ES-R2000-201-V6.3 Napájení/Power supply/Einspeisung: 3x400V+N+PE, 50Hz Zpracoval/Processed /Hat verarbeitet: Pavlik Datum/Date/Datum: 14.1.2014	List/Page/Seite: 13 Listů/Pages/Seiten: 19

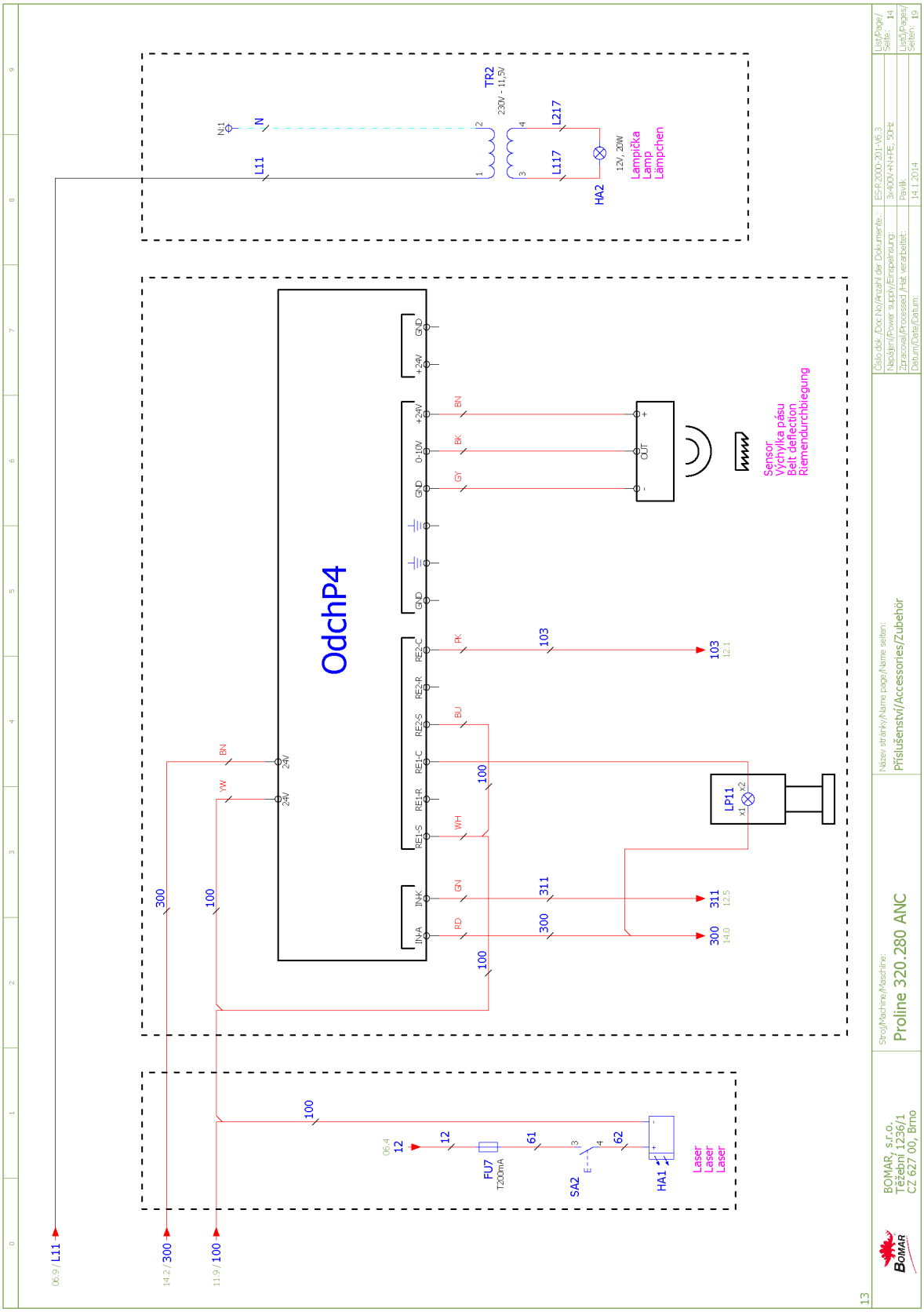
OdchP4
TR2
230V - 11,5V
L11
N
L217
L117
HA2
12V, 20W
Lampička
Lamp
Lämpchen
Sensor
Výchylka pásu
Belt deflection
Riemendurchbiegung
LP11
FU7
T200mA
SA2
HA1
Laser
Laser
Laser
Název stránky/Name page/Name seiten:
Příslušenství/Accessories/Zubehör
Stroj/Machine/Maschine:
Proline 320.280 ANC
BOMAR, s.r.o.
Těžební 1236/1
CZ 627 00, Brno
List/Page/Seite: 14
List/Pages/Seiten: 19
13

6.2. Elektrické schéma / Elektroschema / Wiring diagrams – 3×400 V, PE, 50 Hz

Obsah/ Table of contents/ Inhaltsverzeichnis

Stránka/Page/Seite	Název stránky/Name page/Name Seite	Datum/Date/Datum
00	Úvodní strana/Start page/Startseite	14.1.2014
01	Obsah/ Table of contents/ Inhaltsverzeichnis	14.1.2014
02	Rozmístění prvků v rozvaděči RS1/ Placement of elements in enclosure RS1/ Platzierung der Elemente im Schaltschrank RS1	14.1.2014
03	Ovládací panel na rozvaděči/Control panel/Bedienpult	14.1.2014
04	Kusovník artiklů/ Parts list/ Artikelstückliste	14.1.2014
04.a	Kusovník artiklů/ Parts list/ Artikelstückliste	14.1.2014
04.b	Kusovník artiklů/ Parts list/ Artikelstückliste	14.1.2014
05	Silová část M1-M3 / Power part M1-M3 / Feld partie M1-M3	14.1.2014
05.a	Frekvenční měnič M4 / Speed controller M4 / Frequenzumrichte M4	14.1.2014
06	Deska zdroje/Power board/Netzgerat-Platte	14.1.2014
07	Stykače motorů, M5/Motor contactor, M5/Motor-Schutzschalter, M5	14.1.2014
08	Hydraulické ventily/Hydraulic valve/Hydroventil	14.1.2014
08.a	Hydraulické ventily/Hydraulic valve/Hydroventil	14.1.2014
09	Vstupy/Inputs/Eingange	14.1.2014
10	Tlačítka ovládací panel/Button control panel/Taste Bedienpult	14.1.2014
11	Bezpečnostní okruh/Safety circle/Sicherheitsbereich	14.1.2014
12	Řídící systém/Control system/Steuersystem	14.1.2014
13	Odměřování/Remuneration/Abmessung	14.1.2014
14	Příslušenství/Accessories/Zubehör	14.1.2014

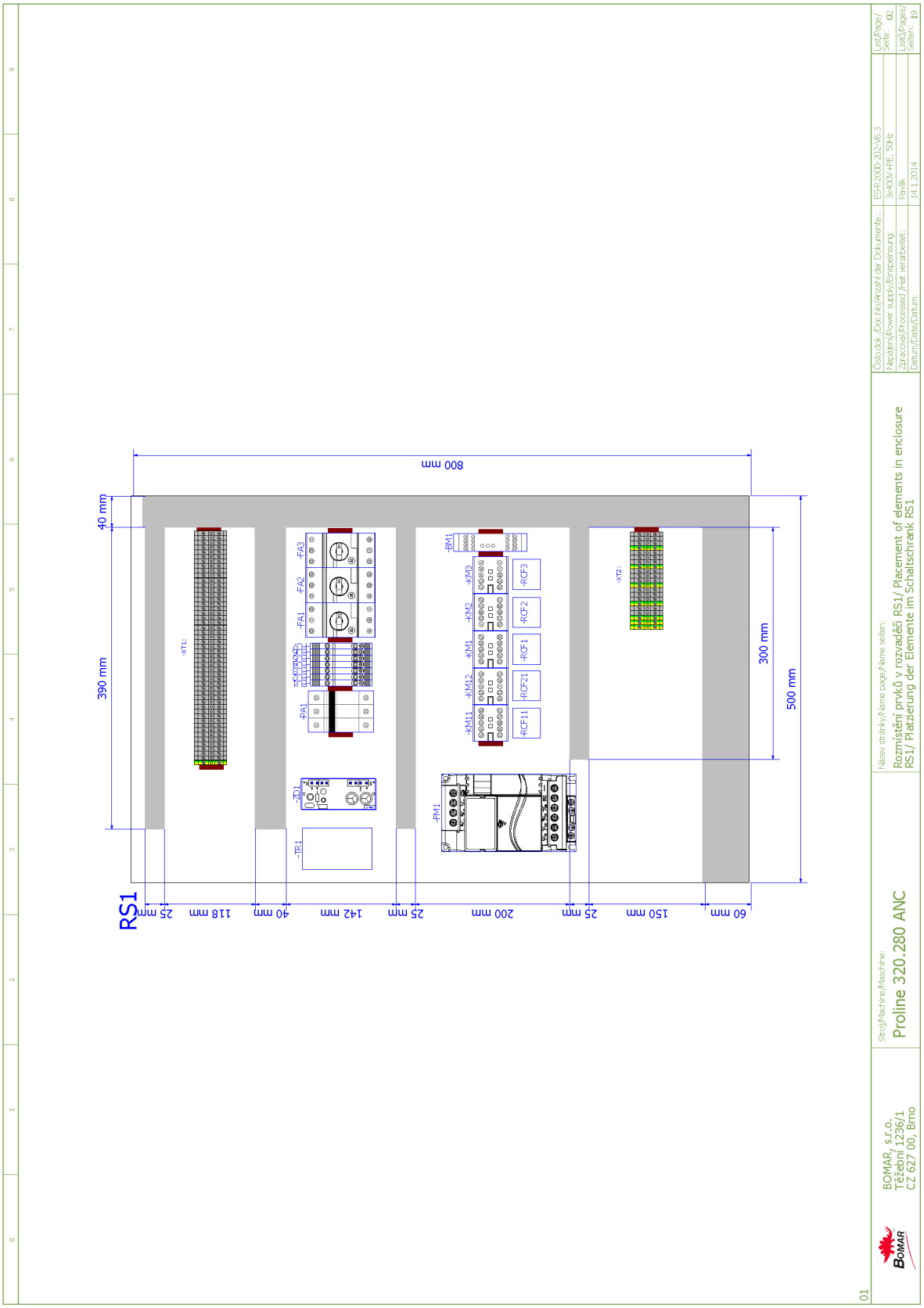
RS1
800 mm
40 mm
390 mm
300 mm
500 mm
-XT1:
-XT2:
-FA1
-FA2
-FA3
-PA1
-ZD1
-TR1
-FM1
-BM1
-KM11
-KM12
-KM1
-KM2
-KM3
-RCF11
-RCF21
-RCF1
-RCF2
-RCF3
25 mm
118 mm
40 mm
142 mm
25 mm
200 mm
25 mm
150 mm
60 mm
BOMAR, s.r.o.
Těžební 1236/1
CZ 627 00, Brno
Stroj/Machine/Maschine:
Proline 320.280 ANC
Název stránky/Name page/Name seiten:
Rozmístění prvků v rozváděči RS1/ Placement of elements in enclosure RS1/ Platzierung der Elemente im Schaltschrank RS1
Číslo dok./Doc.No/Anzahl der Dokumente:: ES-R-2000-202-V6.3
Napájení/Power supply/Einspeisung: 3x400V+PE, 50Hz
Zpracoval/Processed /Hat verarbeitet: Pavlík
Datum/Date/Datum: 14.1.2014
List/Page/Seite: 02
List/Pages/Seiten: 19
01

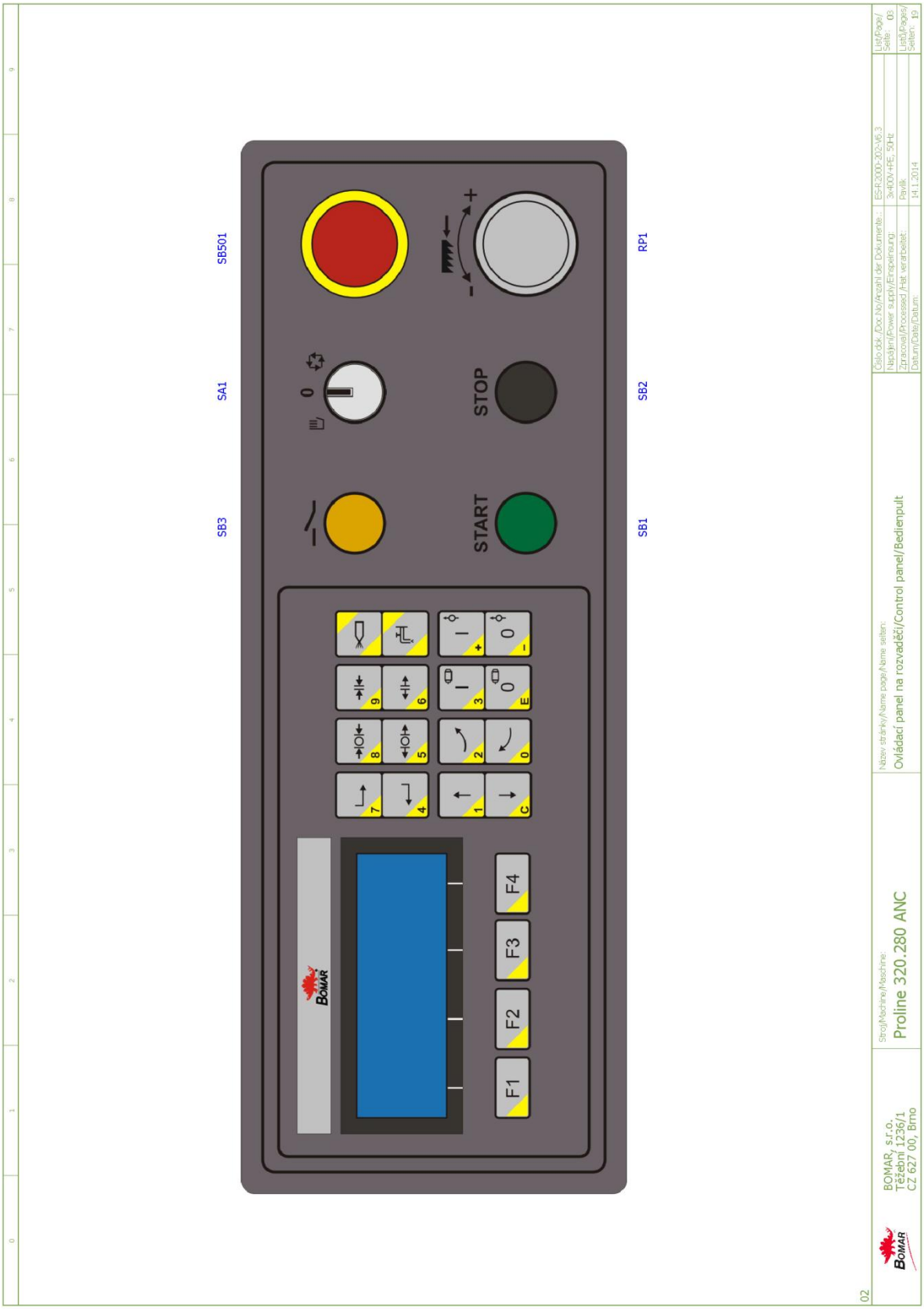
SB501
SA1
SB3
RP1
SB2
SB1
STOP
START
F1
F2
F3
F4
BOMAR
Číslo dok. /Doc.No/Číslo/ der Dokumente:
ES-R.2000-202-N6.3
Napájení/Power supply/Energieversung:
3x400V+HE, 50Hz
Zpracoval/Processed /Hat verarbeitet:
Pavlik
Datum/Date/Datum:
14.1.2014
List/Page/
Seite: 03
List/Pages/
Seiten: 19
Název stránky/Name page/Name seiten:
Ovládací panel na rozvaděči/Control panel/Bedienpult
Stroj/Machine/Maschine:
Proline 320.280 ANC
BOMAR, s.r.o.
Těžební 1236/1
CZ 627 00, Brno
02

Parts list

Device identification	Device description	Type number	Manufacturer	Part number	Quantity	Location (page.column)
-ZD1	Power supply unit - 15VAC/24VDC; 20VAC/28VDC	ZDR-03	Bomar	265.915	1	/06.2
-CU1	Touch-sensitive keyboard	31.R230-207	AKI ELECTRONIC,spol.s.r.o.	31.R230-207	1	/12.0
-FA1	Auxiliary Contact Block - 1xNO+1xNC	HKF1-11	ABB	91.046.002	1	/05.3
-FA2	Auxiliary Contact Block - 1xNO+1xNC	HKF1-11	ABB	91.046.002	1	/05.5
-FA3	Auxiliary Contact Block - 1xNO+1xNC	HKF1-11	ABB	91.046.002	1	/05.7
-HL1	Green light for Eaton adapter	M22-LED-G	EATON	91.061.023	1	/08.a.5
-HL2	White light for Eaton adapter	M22-LED-W	EATON	91.061.034	1	/11.7
-SA1	Head of 3 positional switch	M22-WRK3	EATON	91.060.051	1	/10.5
-SB1	Green translucent switch head	M22-DL-G	EATON	91.060.031	1	/10.2
-SB3	Yellow translucent switch head	M22-DL-Y	EATON	91.060.053	1	/11.3
-SN1	Lineare incrementa encoder - 10-30VDC/5V TTL line driver	LMIX2-026-08.0-1-01	ELGO	91.270.006	1	/13.4
-FU1	Tube fuse - 2A/250V, slow, 5x20	T2A/250V	ESKA	91.230.001	1	/06.1
-FU2	Tube fuse - 2A/250V, slow, 5x20	T2A/250V	ESKA	91.230.001	1	/06.1
-FU3	Tube fuse - 500mA/250V, slow, 5x20	T500mA/250V	ESKA	91.230.011	1	/06.5
-FU6	Tube fuse - 6,3A/250V, slow, 5x20	T6,3A/250V	ESKA	91.230.002	1	/06.5
-RP1	Potenciometr 4k7	TP195 4k7/N20A	GES-ELECTRONICS, a.s.	91.283.015	1	/05.a.6
-RP1	Potentiometer knob - 24mm	S8877 BLK	GES-ELECTRONICS, a.s.	91.060.063	1	/05.a.6
-RCF1	RCF filter	FBOPR1624	Ing. Miroslav Vlček	91.041.015	1	/05.2
-RCF2	RCF filter	FBOPR1624	Ing. Miroslav Vlček	91.041.015	1	/05.4
-RCF3	RCF filter	FBOPR1624	Ing. Miroslav Vlček	91.041.015	1	/05.6
-RCF11	RCF filter	FBOPR1624	Ing. Miroslav Vlček	91.041.015	1	/05.a.1
-RCF21	RCF filter	FBOPR1624	Ing. Miroslav Vlček	91.041.015	1	/05.a.1
-BM1	Safety relay - 3xNO	CS AR-02M024	PIZZATO	91.051.034	1	/11.5
-FA1	Manual motor starter - 0.4A	MS116-0,4	ABB	91.045.017	1	/05.3
-FA2	Manual motor starter - 1A	MS116-1,00	ABB	91.045.019	1	/05.5
-FA3	Manual motor starter - 4A	MS116-4,0	ABB	91.045.022	1	/05.7
-FU1	Fuse terminal	WK4/THSi5U	WIELAND	91.251.102	1	/06.1
-FU2	Fuse terminal	WK4/THSi5U	WIELAND	91.251.102	1	/06.1

The manufacturer reserves right to use an equivalent replacement device.

03

BOMAR, s.r.o.
Těžební 1236/1
CZ 627 00, Brno

Stroj/Machine/Maschine: Proline 320.280 ANC

Název stránky/Name page/Name seiten: Kusovník artiklů/ Parts list/ Artikelstückliste

Číslo dok./Doc.No/Anzahl der Dokumente.:	ES-R.2000-202-V6.3	List/Page/Seite:	04
Napájení/Power supply/Einspeisung:	3x400V+PE, 50Hz		
Zpracoval/Processed /Hat verarbeitet:	Pavlik	Listů/Pages/Seiten:	19
Datum/Date/Datum:	14.1.2014		

Parts list

Device identification	Device description	Type number	Manufacturer	Part number	Quantity	Location (page.column)
-FU3	Fuse terminal	WK4/THSi5U	WIELAND	91.251.102	1	/06.5
-FU4	Fuse terminal	WK4/THSi5U	WIELAND	91.251.102	1	/06.5
-FU4	Tube fuse - 800mA/250V, slow, 5x20	T800mA/250V	ESKA	91.230.010	1	/06.5
-FU5	Fuse terminal	WK4/THSi5U	WIELAND	91.251.102	1	/06.5
-FU5	Tube fuse - 1A/250V, slow, 5x20	T1A/250V	ESKA	91.230.031	1	/06.5
-FU6	Fuse terminal	WK4/THSi5U	WIELAND	91.251.102	1	/06.5
-FU7	Tube fuse - 200mA/250V, slow, 5x20	T200mA/250V	ESKA	91.230.037	1	/14.1
-FU7	Fuse terminal	WK4/THSi5U	WIELAND	91.251.102	1	/14.1
-KM1	Minicontactor - 4kW/400V, 3P	B6S-30-01-1.7-71	ABB	91.040.049	1	/07.2
-KM2	Minicontactor - 4kW/400V, 3P	B6S-30-01-1.7-71	ABB	91.040.049	1	/07.4
-KM3	Minicontactor - 4kW/400V, 3P	B6S-30-01-1.7-71	ABB	91.040.049	1	/07.5
-KM11	Minicontactor - 4kW/400V, 3P	B6S-30-01-1.7-71	ABB	91.040.049	1	/11.7
-KM12	Minicontactor - 4kW/400V, 3P	B6S-30-01-1.7-71	ABB	91.040.049	1	/11.8
-PA1	Fuse switch disconnector E-90 - 3P	E 93/32	ABB	91.241.014	1	/05.a.2
-QS1	Handle switch - black	OHBS2RJ	ABB	91.180.015	1	/05.0
-RP1	Fastconnect clamp	WAGO 224-112	WIELAND	91.250.009	3	/05.a.6
-SA1	Attaching adapter + 1NO	M22-AK10	EATON	91.061.021	1	/10.5
-SA1	NO contact for Eaton adapter	M22-K10	EATON	91.061.022	1	/10.5
-SB1	Attaching adapter + 1NO	M22-AK10	EATON	91.061.021	1	/10.2
-SB2	Attaching adapter + 1NO	M22-AK10	EATON	91.061.021	1	/10.3
-SB2	Switch head - black	M22-D-S	EATON	91.060.035	1	/10.3
-SB3	Attaching adapter + 1NO	M22-AK10	EATON	91.061.021	1	/11.3
-SB501	Emergency-stop mushroom push - button + 3xNC	YW1B-V4E02R	IDEC	91.060.084	1	/11.1
-TR1	Toroidal transformer - 0-230-400V/20V/15V, 0.65-0.38A/6A/2A, 150VA	1502304002015	KARBAN s.r.o.	91.080.026	1	/06.1
-SQ8	Safety limit switch - 2xNC	QKS8	KEDU	91.173.012	1	/11.1
-PA1	Cylindric fuse - 8A, 10x38 fast, gG charakteristic	PV10 8A gG	OEZ	91.231.003	3	/05.a.2
-SQ3	Limit switch - 1NC+1NO	D4N-4A31	OMRON	91.173.007	1	/09.2
-SQ4	Limit switch - 1NO + 1NC, roller, M2, snap action	FR 605-M2	PIZZATO	91.173.009	1	/09.3

The manufacturer reserves right to use an equivalent replacement device.

Parts list

Device identification	Device description	Type number	Manufacturer	Part number	Quantity	Location (page.column)
-SQ5	Limit switch - 1NO + 1NC, roller, M2, snap action	FR 605-M2	PIZZATO	91.173.009	1	/09.4
-SQ6	Limit switch - 1NO + 1NC	FR 615-M2	PIZZATO	91.173.044	1	/09.5
-SQ7	Limit switcher - 1NO + 1NC, large adjustable roller, M2, snap action	FR 655-M2	PIZZATO	91.173.045	1	/09.6
-LQ1.A	Sensor cable	MOD.14/4 M12 SL LC10	SICK	91.142.001	1	/09.7
-LQ1.B	Sensor cable	MOD.15/4 M12 SL LC10	SICK	91.142.002	1	/09.8
-QS1	Disconnector - 3P, 16A	OT16FT3	ABB	91.170.018	1	/05.0
-CU1	Control circuit	PRO-5.X	Bomar	265.917	1	/12.0
-FM1	AC motor drive - 2.2kW, 3x400VAC	VFD022EL43A	DELTA ELECTRONICS, INC.	91.012.123	1	/05.a.2
-M5	Fan 24VDC, 154CFM	RDH1238 B2	Xinruilian Electronic Co.	91.015.126	1	/07.7
-QS1	Terminal shroud	OTS40T3	ABB	91.170.017	1	/05.0

The manufacturer reserves right to use an equivalent replacement device.

04.a

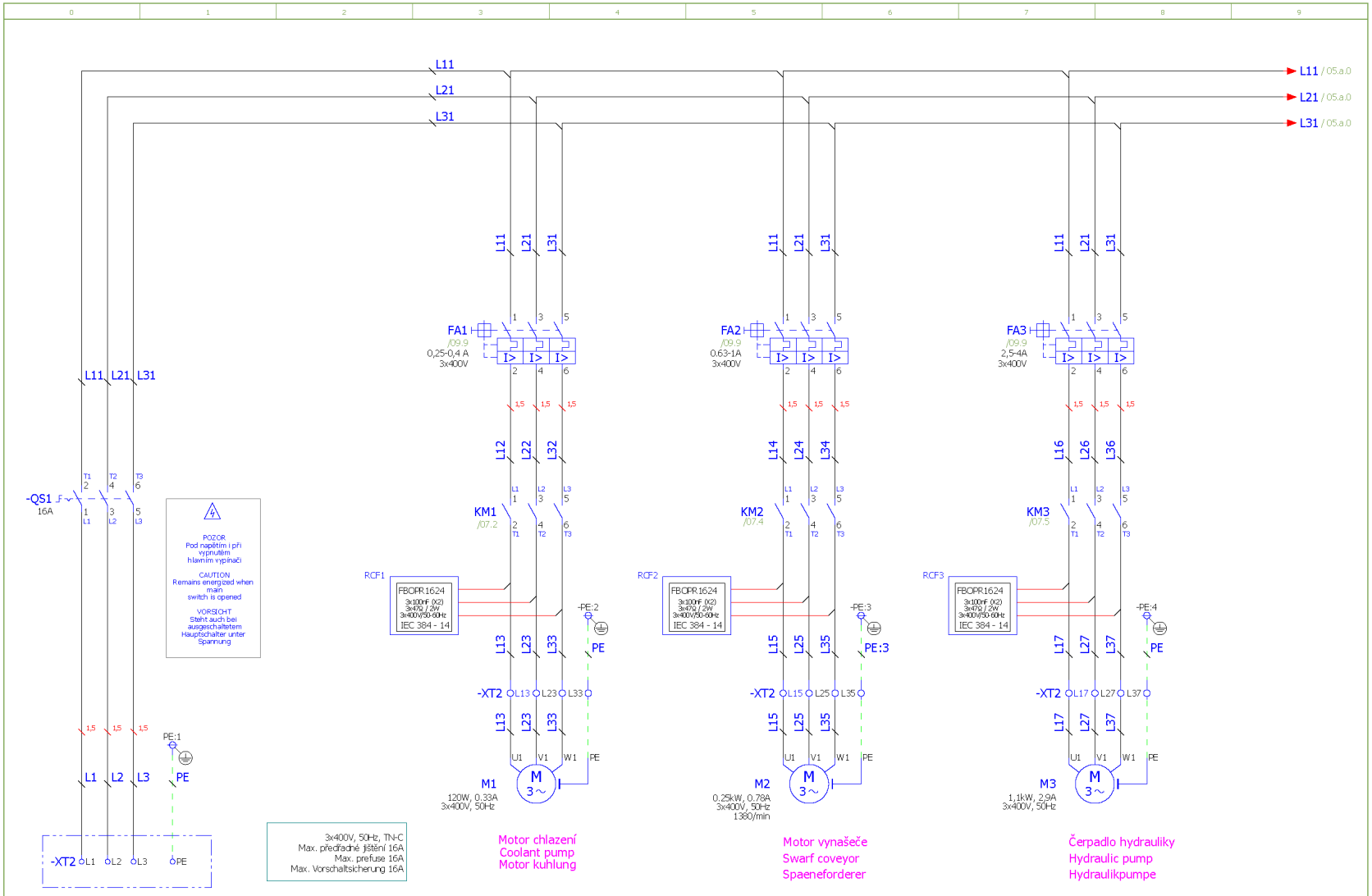

04.b

BOMAR, s.r.o. Těžební 1236/1 CZ 627 00, Brno	Stroj/Machine/Maschine: Proline 320.280 ANC	Název stránky/Name page/Name seiten: Silová část M1-M3 / Power part M1-M3 / Feld partie M1-M3	Číslo dok./Doc.No/Anzahl der Dokumente.:	ES-R.2000-202-V6.3	List/Page/Seite: 05
			Napájení/Power supply/Einspeisung:	3x400V+PE, 50Hz	Listů/Pages/Seiten: 19
			Zpracoval/Processed /Hat verarbeitet:	Pavlik	
			Datum/Date/Datum:	14.1.2014	

Schéma
Schemas
Schematics

VersionNo. 00.00.00

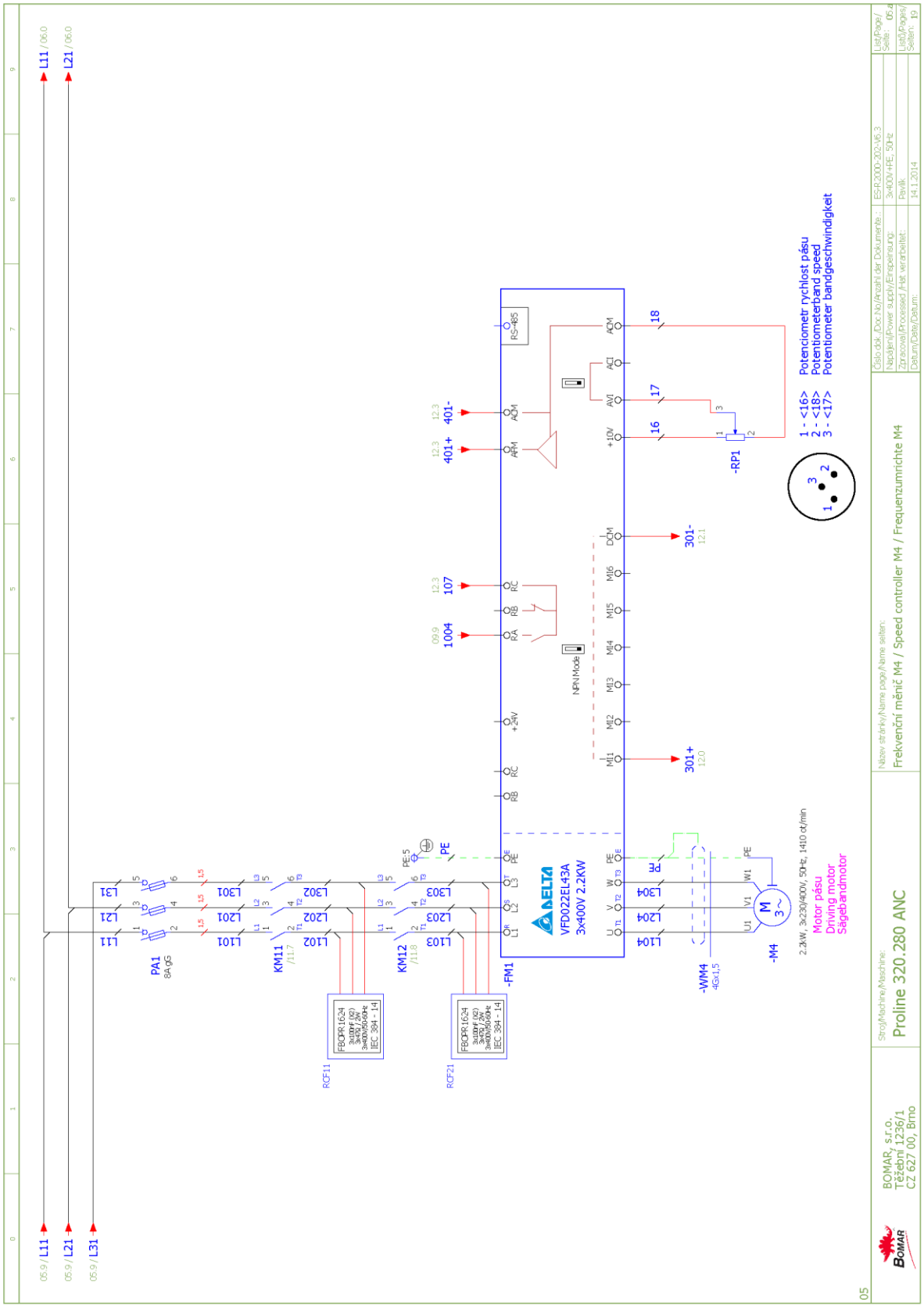
L11 / 06.0
L21 / 06.0
05.9 / L11
05.9 / L21
05.9 / L31
PA1
8A gG
KM11
KM12
RCF11
RCF21
FBCPR16.24
IEC 384 - 14
-FM1
VFD022EL43A
3x400V 2.2KW
RS-485
NPN Mode
401+
401-
1004
107
301+
301-
-RP1
1 - <16>
2 - <18>
3 - <17>
Potenciometr rychlost pásu
Potentiometerband speed
Potentiometer bandgeschwindigkeit
-WM4
4Gx1,5
-M4
2.2KW, 3x230/400V, 50Hz, 1410 ot/min
Motor pásu
Driving motor
Sägebandmotor
BOMAR, s.r.o.
Těžební 1236/1
CZ 627 00, Brno
Stroj/Machine/Maschine:
Proline 320.280 ANC
Název stránky/Name page/Name seiten:
Frekvenční měnič M4 / Speed controller M4 / Frequenzumrichte M4
Číslo dok./Doc.No/Anzahl der Dokumente:
ESR-2000-202-V6.3
Napájení/Power supply/Einspeisung:
3x400V+PE, 50Hz
Zpracoval/Processed /Hat verarbeitet:
Pavlík
Datum/Date/Datum:
14.1.2014
List/Page/Seite:
05.a
List/Pages/Seiten:
19
05

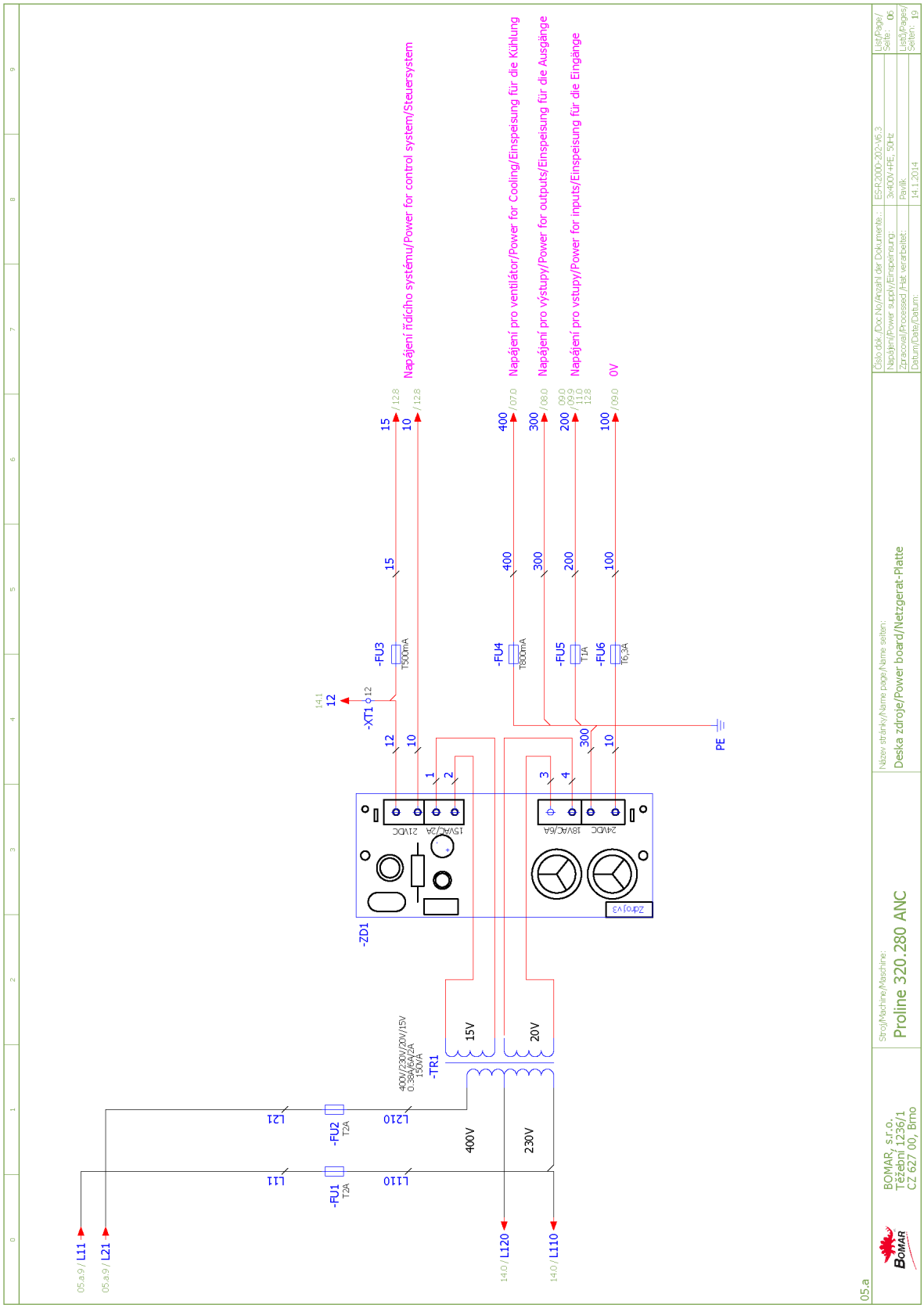
Napájení řídícího systému/Power for control system/Steuersystem
Napájení pro ventilátor/Power for Cooling/Einspeisung für die Kühlung
Napájení pro výstupy/Power for outputs/Einspeisung für die Ausgänge
Napájení pro vstupy/Power for inputs/Einspeisung für die Eingänge
0V
-XT1
-FU3
T500mA
-FU4
T800mA
-FU5
T1A
-FU6
T6,3A
-ZD1
Zdroj v3
15VAC/2A
21VDC
18VAC/6A
24VDC
PE
-TR1
400V/230V/20V/15V
0,38A/6A/2A
150VA
15V
20V
400V
230V
-FU1
T2A
-FU2
T2A
L11
L21
L110
L120
05.a 9 / L11
05.a 9 / L21
14.0 / L120
14.0 / L110
Číslo dok./Doc.No/Anzahl der Dokumente:
ES-R2000-202-V6.3
Napájení/Power supply/Einspeisung:
3x400V+PE; 50Hz
Zpracoval/Processed /Hat verarbeitet:
Pavlík
Datum/Date/Datum:
14.1.2014
List/Page/Seite: 06
List(s)/Pages/Seiten: 19
Název stránky/Name page/Name seiten:
Deska zdroje/Power board/Netzgerat-Platte
Stroj/Machine/Maschine:
Proline 320.280 ANC
BOMAR, s.r.o.
Třešňová 1236/1
CZ 627 00, Brno
05.a

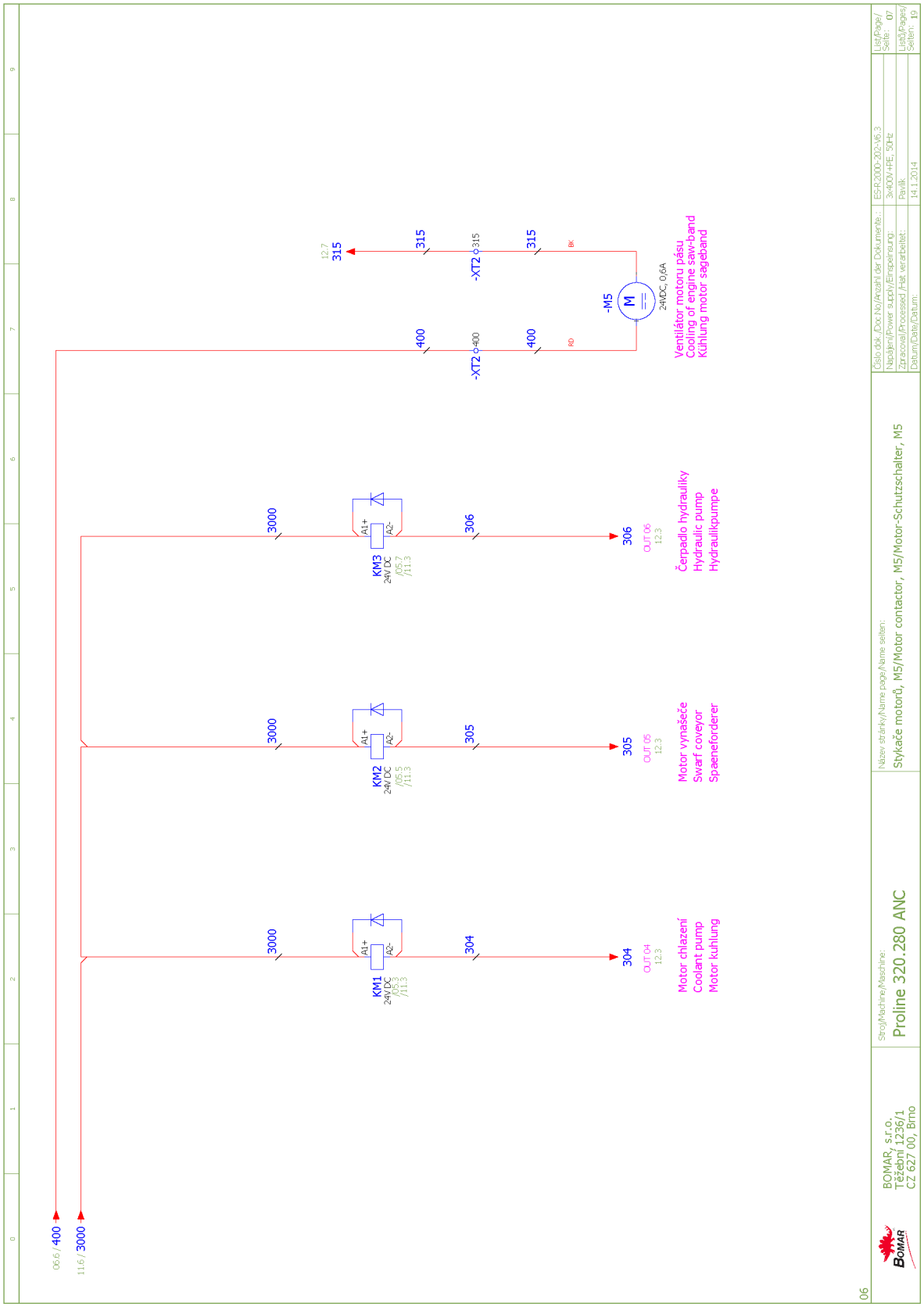
06.6 / 400
116 / 3000
3000
KM1
24V DC
/05.3
/11.3
A1+
A2-
304
OUT 04
12.3
Motor chlazení
Coolant pump
Motor kühlung
3000
KM2
24V DC
/05.5
/11.3
305
OUT 05
12.3
Motor vynašeče
Swarf coveyor
Spaeneförderer
3000
KM3
24V DC
/05.7
/11.3
306
OUT 06
12.3
Čerpadlo hydrauliky
Hydraulic pump
Hydraulikpumpe
400
-XT2 400
315
-XT2 315
12.7
315
RD
BK
-M5
M
24VDC, 0,6A
Ventilátor motoru pásu
Cooling of engine saw-band
Kühlung motor sageband
06
BOMAR, s.r.o.
Těžební 1236/1
CZ 627 00, Brno
Stroj/Machine/Maschine:
Proline 320.280 ANC
Název stránky/Name page/Name seiten:
Stykače motorů, M5/Motor contactor, M5/Motor-Schutzschalter, M5
Číslo dok./Doc.No/Anzahl der Dokumente:
ES-R-2000-202-V6.3
List/Page/Seite: 07
Napájení/Power supply/Einspeisung:
3x400V+PE, 50Hz
List(Pages/Seiten: 19
Zpracoval/Processed /Hat verarbeitet:
Pavlík
Datum/Date/Datum:
14.1.2014

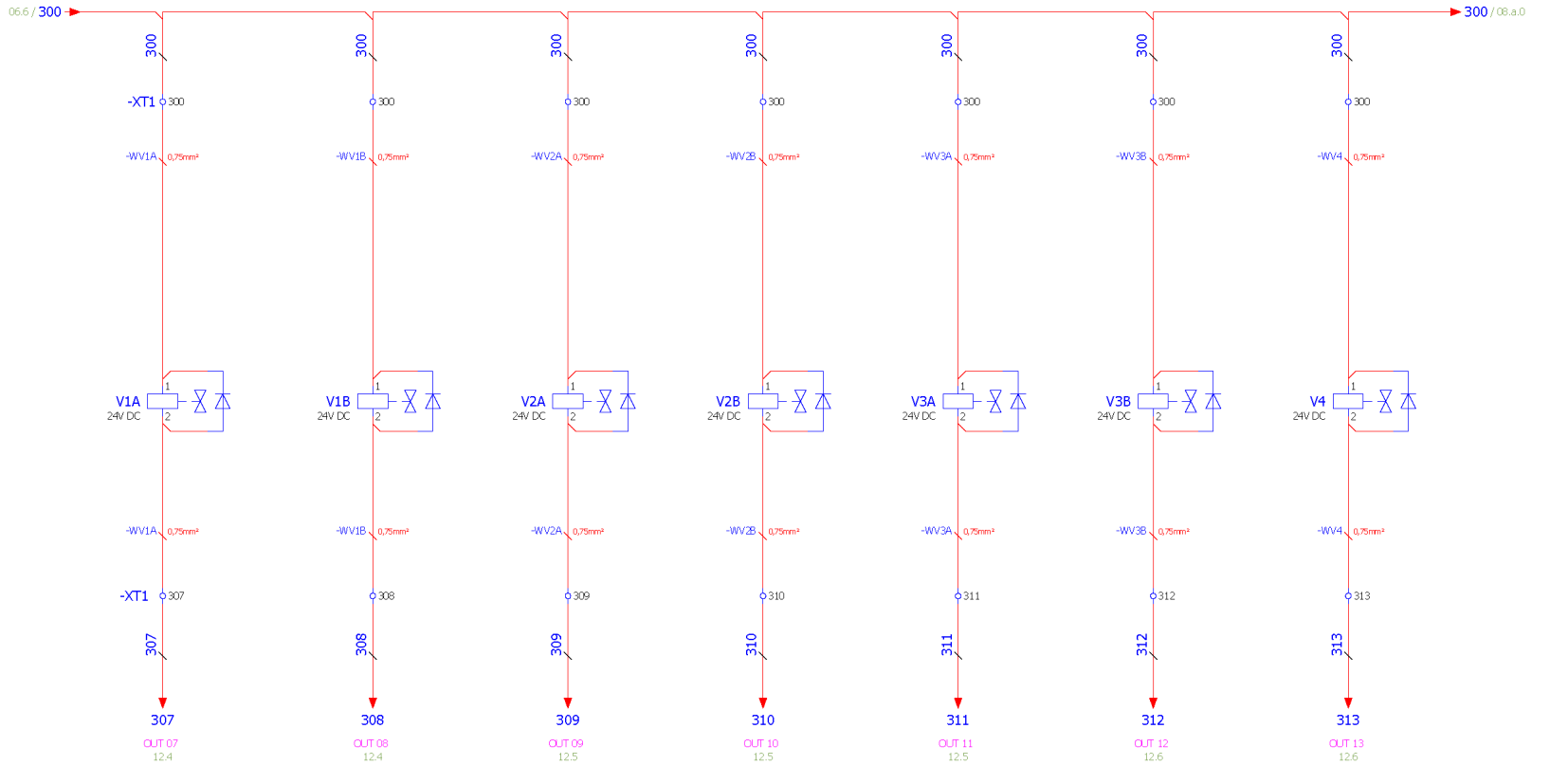

07

BOMAR, s.r.o. Těžební 1236/1 CZ 627 00, Brno	Stroj/Machine/Maschine: Proline 320.280 ANC	Název stránky/Name page/Name seiten: Hydraulické ventily/Hydraulic valve/Hydroventil	Číslo dok./Doc.No/Anzahl der Dokumente.:	ES-R2000-202-V6.3	List/Page/Seite: 08
			Napájení/Power supply/Einspeinsung:	3x400V+PE, 50Hz	Listů/Pages/Seiten: 19
			Zpracoval/Processed /Hat verarbeitet:	Pavlik	
			Datum/Date/Datum:	14.1.2014	

VersionNo. 00.00.00

Schéma
Schemas
Schematics

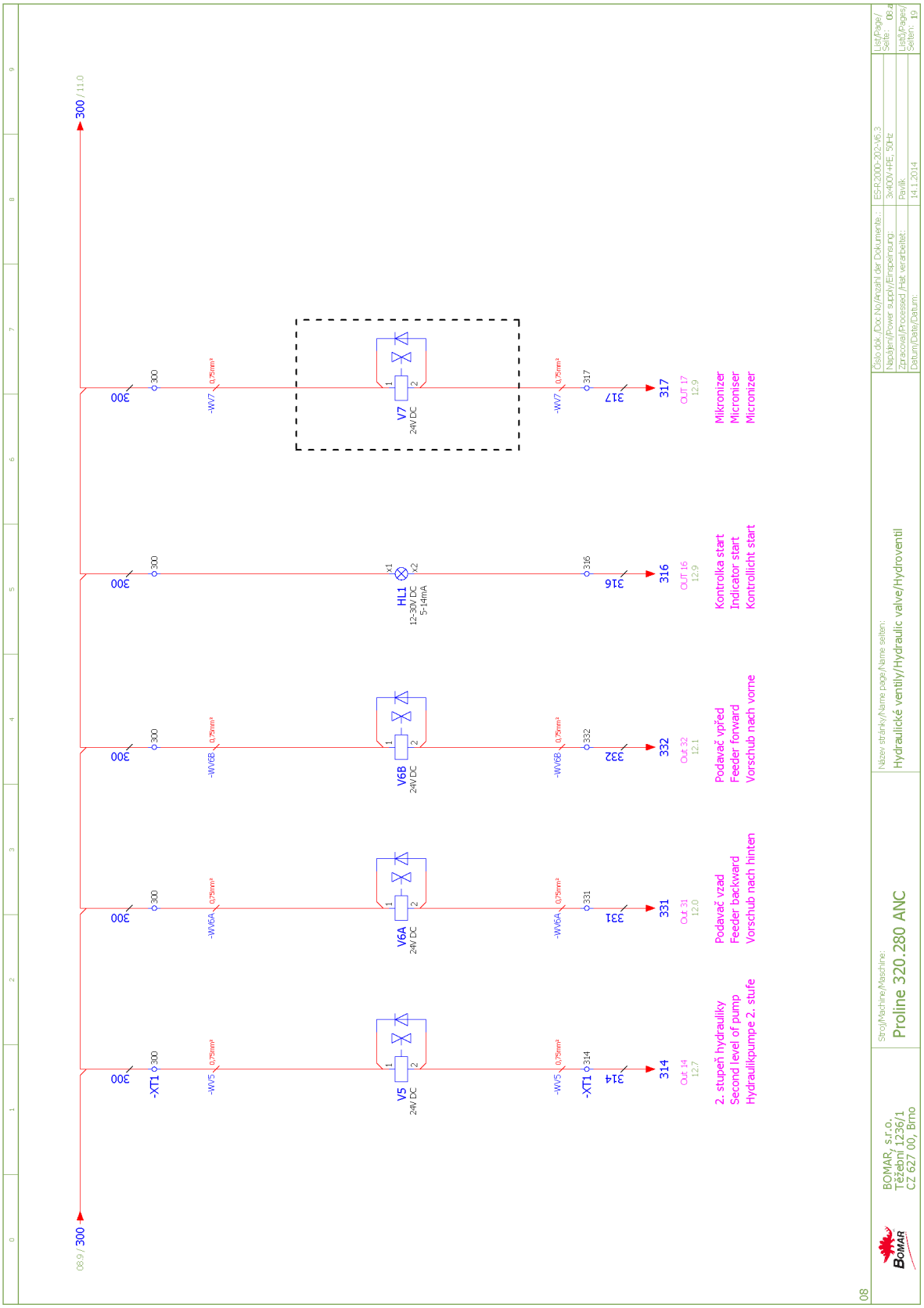
300 / 11.0
08.9 / 300
300
-XT1
-WV5
0,75mm²
V5
24V DC
-WV6A
V6A
-WV6B
V6B
H1L1
12-30V DC
5-14mA
-WV7
V7
314
331
332
316
317
Out 14
12.7
Out 31
12.0
Out 32
12.1
OUT 16
12.9
OUT 17
2. stupeň hydrauliky
Second level of pump
Hydraulikpumpe 2. stufe
Podavač vzad
Feeder backward
Vorschub nach hinten
Podavač vpřed
Feeder forward
Vorschub nach vorne
Kontrolka start
Indicator start
Kontrollicht start
Mikronizer
Microniser
Micronizer
08
BOMAR, s.r.o.
Těžební 1236/1
CZ 627 00, Brno
Stroj/Machine/Maschine:
Proline 320.280 ANC
Název stránky/Name page/Name seiten:
Hydraulické ventily/Hydraulic valve/Hydroventil
Číslo dok./Doc.No/Anzahl der Dokumente:
ES-R2000-202-V6.3
Napájení/Power supply/Einspeiseung:
3x400V+PE, 50Hz
Zpracoval/Processed /Hat verarbeitet:
Pavlík
Datum/Date/Datum:
14.1.2014
List/Page/Seite:
08.a
List/Pages/Seiten:
19

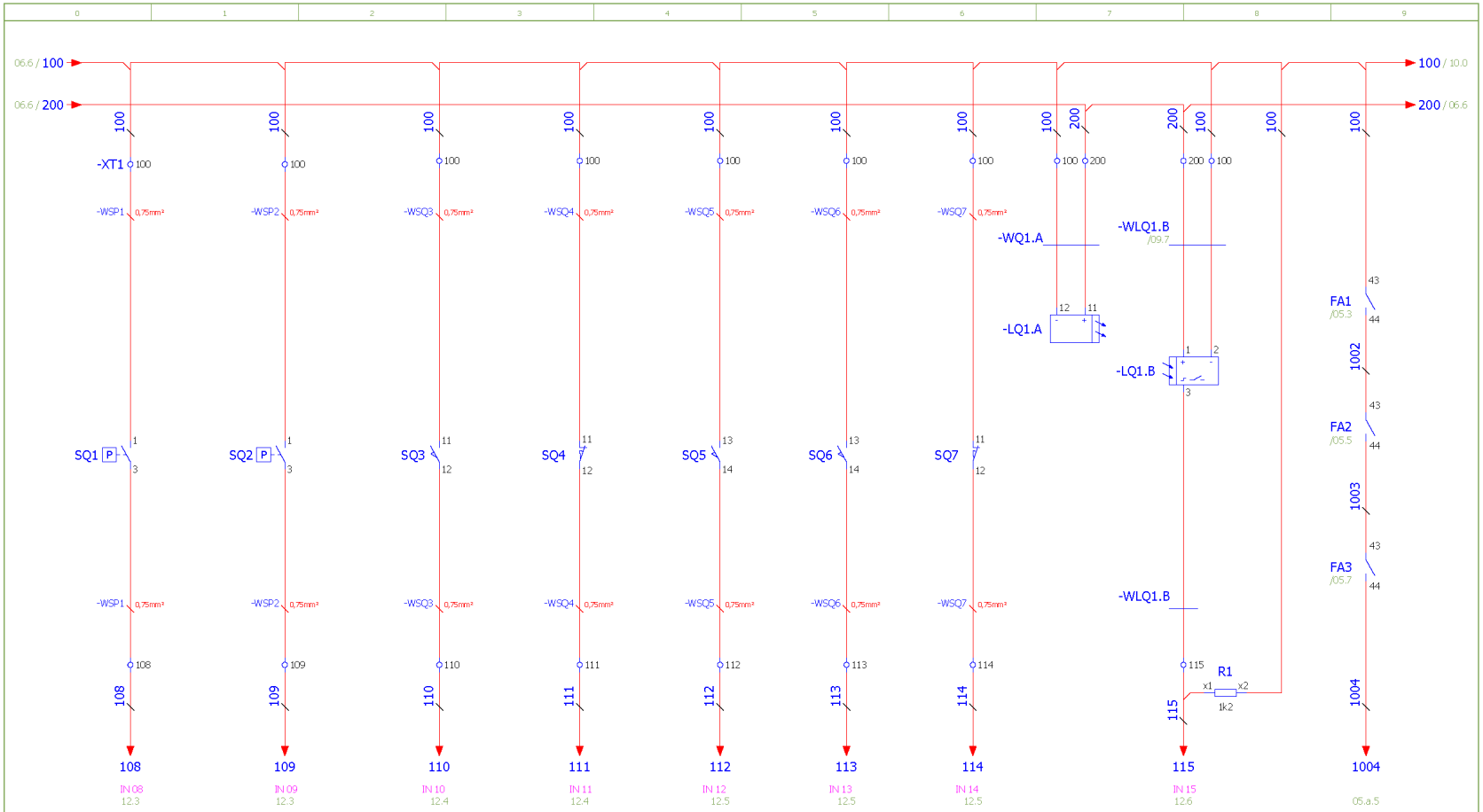

08.a

BOMAR, s.r.o. Těžební 1236/1 CZ 627 00, Brno	Stroj/Machine/Maschine: Proline 320.280 ANC	Název stránky/Name page/Name seiten: Vstupy/Inputs/Eingange	Číslo dok./Doc.No/Anzahl der Dokumente.:	ES-R2000-202-V6.3	List/Page/Seite: 09
			Napájení/Power supply/Einspeisung:	3x400V+PE, 50Hz	
			Zpracoval/Processed /Hat verarbeitet:	Pavlik	Listů/Pages/Seiten: 19
			Datum/Date/Datum:	14.1.2014	

VersionNo: 00.00.00

Schéma
Schemas
Schematics

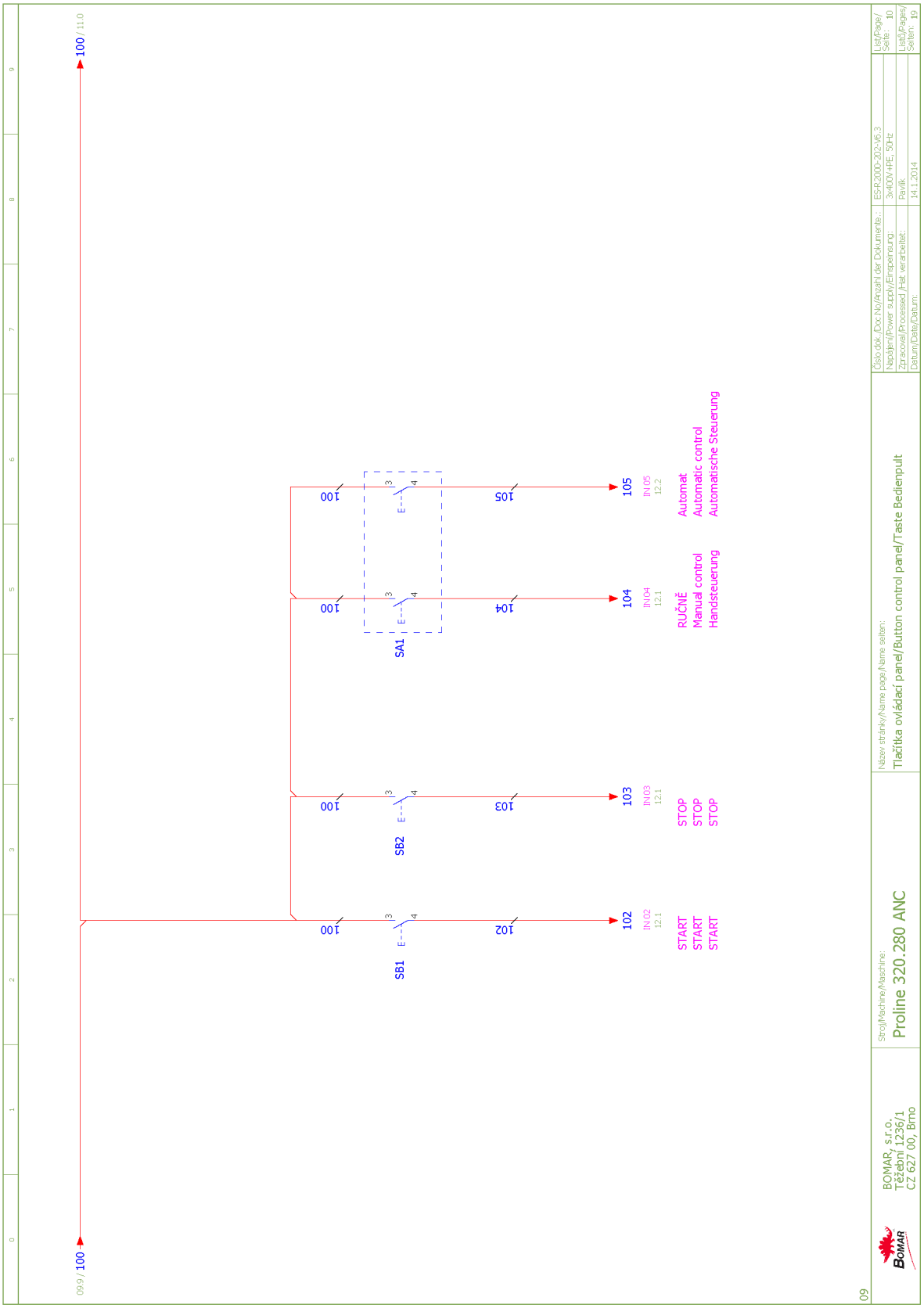
099 / 100
100 / 11.0
100
SB1
SB2
SA1
102
103
104
105
IN 02
12.1
IN 03
12.1
IN 04
12.1
IN 05
12.2
START
START
START
STOP
STOP
STOP
RUČNĚ
Manual control
Handsteuerung
Automat
Automatic control
Automatische Steuerung
09
BOMAR, s.r.o.
Těžební 1236/1
CZ 627 00, Brno
Stroj/Machine/Maschine:
Proline 320.280 ANC
Název stránky/Name page/Name seiten:
Tlačítka ovládací panel/Button control panel/Taste Bedienpult
Číslo dok./Doc.No/Anzahl der Dokumente:
ES-R-2000-202-V6.3
Napájení/Power supply/Einspeisung:
3x400V+PE, 50Hz
Zpracoval/Processed /Hat verarbeitet:
Pavlík
Datum/Date/Datum:
14.1.2014
List/Page/Seite: 10
List/Pages/Seiten: 19

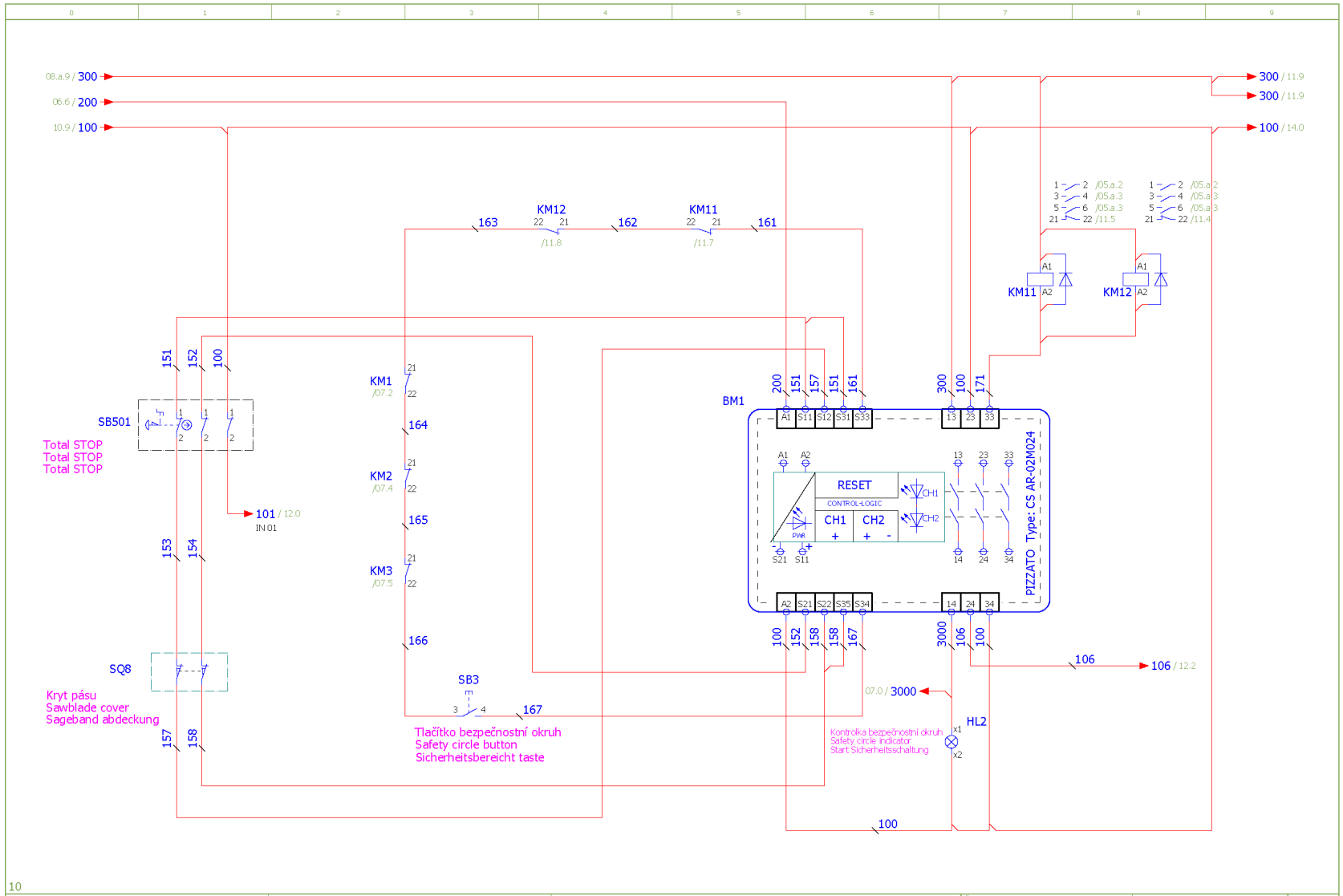

10

BOMAR, s.r.o. Těžební 1236/1 CZ 627 00, Brno	Stroj/Machine/Maschine: Proline 320.280 ANC	Název stránky/Name page/Name seiten: Bezpečnostní okruh/Safety circle/Sicherheitsbereich	Číslo dok./Doc.No/Anzahl der Dokumente.:	ES-R.2000-202-V6.3	List/Page/Seite: 11
			Napájení/Power supply/Einspeisung:	3x400V+PE, 50Hz	Listů/Pages/Seiten: 19
			Zpracoval/Processed /Hat verarbeitet:	Pavlik	
			Datum/Date/Datum:	14.1.2014	

VersionNo. 00.00.00

Schéma
Schemas
Schematics

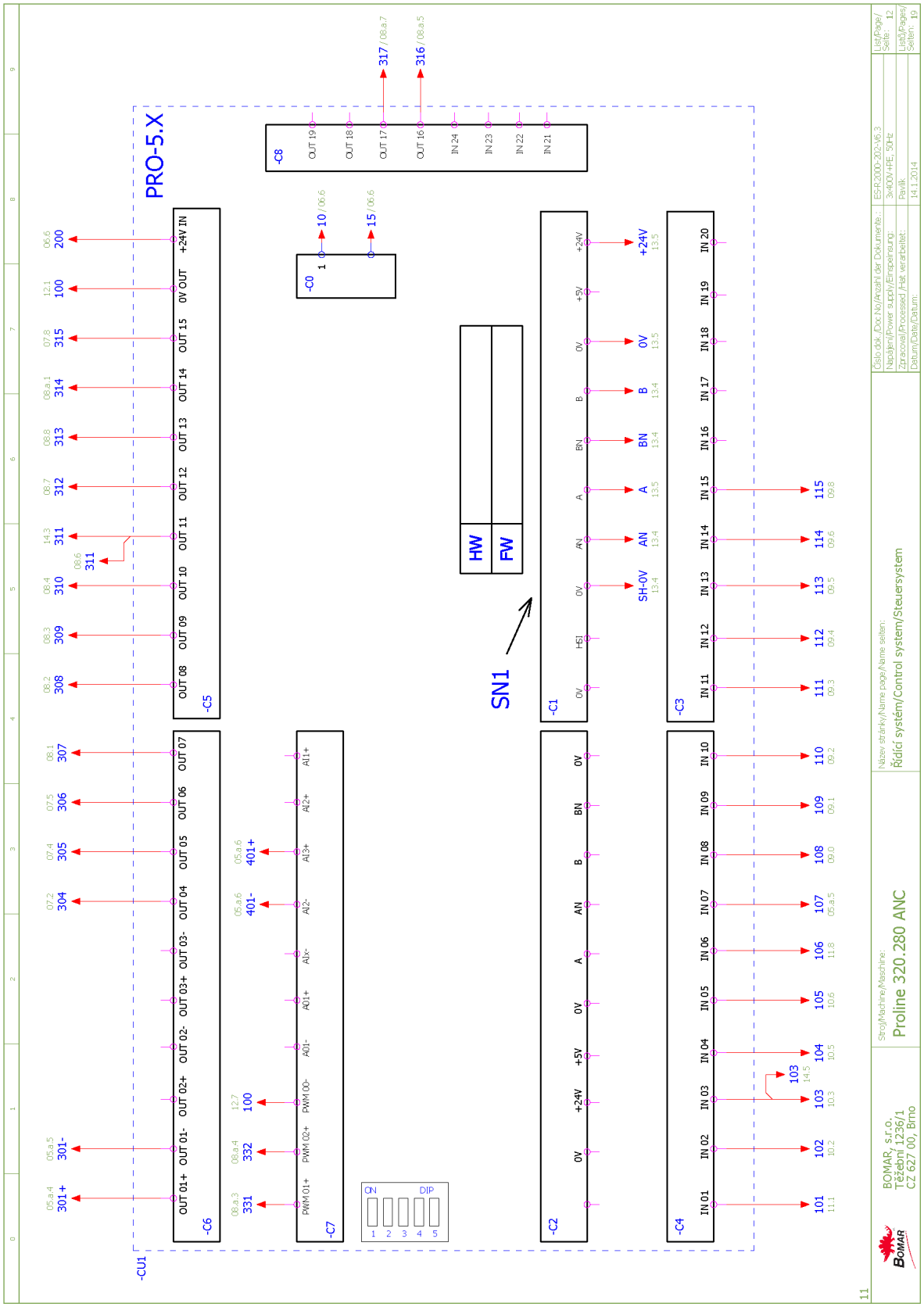
PRO-5.X
-CU1
-C6
-C5
-C7
-C0
-C8
-C1
-C2
-C3
-C4
SN1
HW
FW
DIP
ON
1 2 3 4 5
BOMAR, s.r.o.
Těžební 1236/1
CZ 627 00, Brno
Stroj/Machine/Maschine:
Proline 320.280 ANC
Název stránky/Name page/Name seiten:
Řídící systém/Control system/Steuersystem
Číslo dok./Doc.No/Anzahl der Dokumente:
ES-R-2000-202-V6.3
Napájení/Power supply/Einspeisung:
3x400V+PE, 50Hz
Zpracoval/Processed /Hat verarbeitet:
Pavlík
Datum/Date/Datum:
14.1.2014
List/Page/Seite: 12
List/Pages/Seiten: 19
11

SN1		Kabel HELU-Flexi 7x0.14
+	HNĚDÁ BROWN BRAUN	HNĚDÁ+MODRÁ BROWN+BLUE BRAU+BLAU
-	BÍLÁ WHITE WEIS	HNĚDÁ/BÍLÁ+MODRÁ/BÍLÁ BROWN/WHITE+BLUE/WHITE BRAUN/WEIS+BLAU/WEIS
A	ZELENÁ GREEN GRÜN	ZELENÁ GREEN GRUN
AN	FIALOVÁ VIOLET VIOLET	ZELENÁ/BÍLÁ GREEN/WHITE GRUN/WEIS
B	ŽLUTÁ YELLOW GELB	ORANŽOVÁ ORANGE ORANGE
BN	ORANŽOVÁ ORANGE ORANGE	ORANŽOVÁ/BÍLÁ ORANGE/WHITE ORANGE/WEIS
	ČERNÁ BLACK SCHWARZ	STÍNĚNÍ SHIELD LEITUNGSSCHIRM

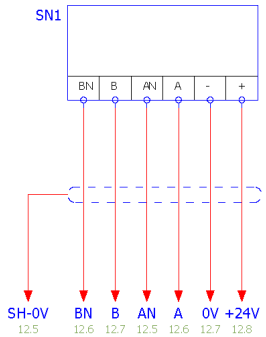

BOMAR, s.r.o.
Těžební 1236/1
CZ 627 00, Brno

Stroj/Machine/Maschine: Proline 320.280 ANC

Název stránky/Name page/Name seiten: Odměřování/Remuneration/Abmessung

Číslo dok./Doc.No/Anzahl der Dokumente.:	ES-R2000-202-V6.3
Napájení/Power supply/Einspeisung:	3x400V+PE, 50Hz
Zpracoval/Processed /Hat verarbeitet:	Pavlik
Datum/Date/Datum:	14.1.2014

List/Page/Seite: 13
Listů/Pages/Seiten: 19

VersionNo. 00.00.00

Schéma
Schemas
Schematics

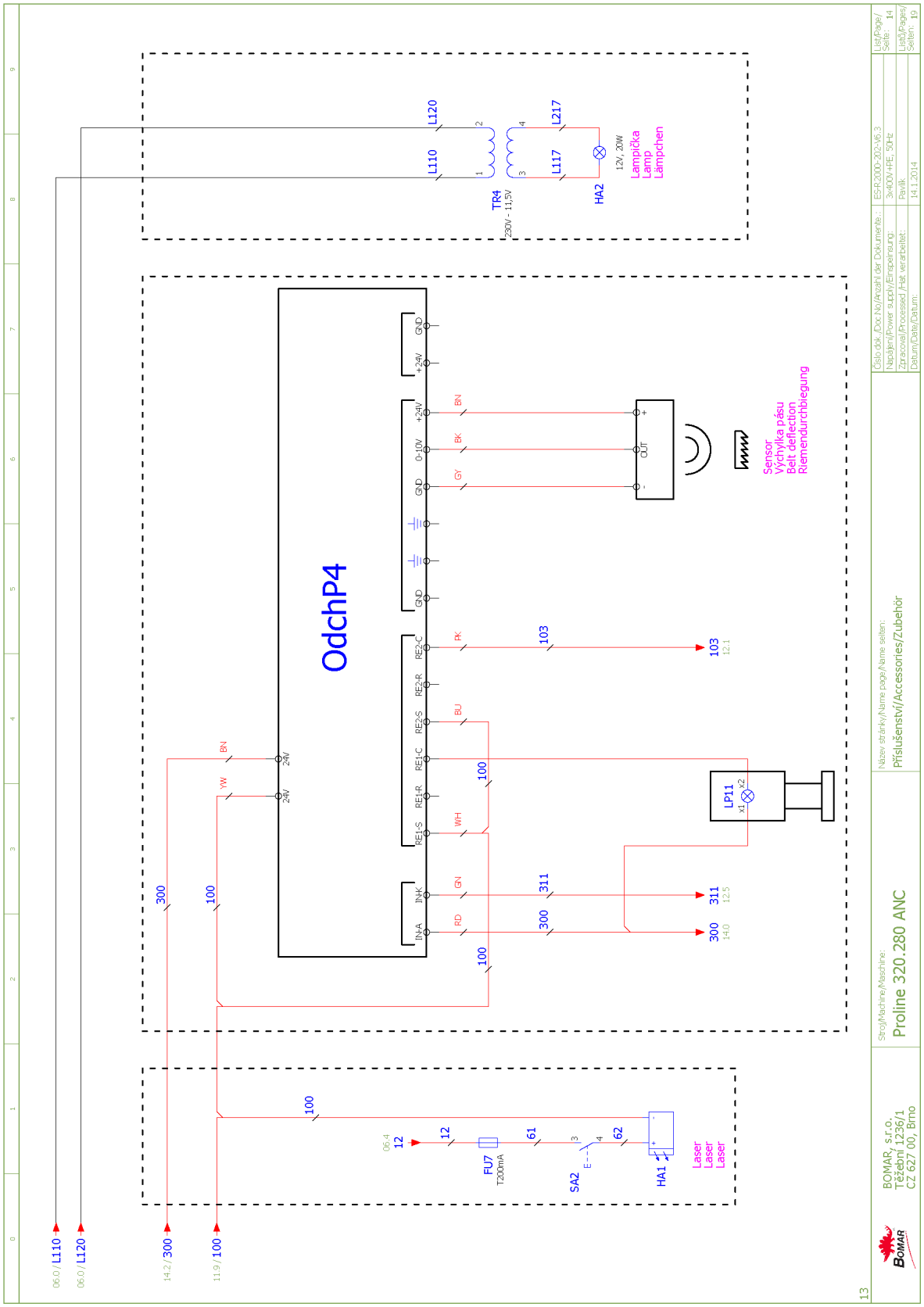
OdchP4
IN-A
IN-K
RE1-S
RE1-R
RE1-C
RE2-S
RE2-R
RE2-C
GND
0-10V
+24V
GND
+24V
GND
OUT
Sensor
Výchylka pásu
Belt deflection
Riemendurchbiegung
LP11
TR4
230V - 11,5V
L110
L120
L117
L217
HA2
12V, 20W
Lampička
Lamp
Lämpchen
FU7
T200mA
SA2
HA1
Laser
Laser
Laser
Číslo dok./Doc.No/Anzahl der Dokumente: : ES-R-2000-202-V6.3
Napájení/Power supply/Einspeisung: 3x400V+PE, 50Hz
Zpracoval/Processed /Hat verarbeitet: Pavlík
Datum/Date/Datum: 14.1.2014
List/Page/Seite: 14
List/Pages/Seiten: 19
Název stránky/Name page/Name seiten:
Příslušenství/Accessories/Zubehör
Stroj/Machine/Maschine:
Proline 320.280 ANC
BOMAR, s.r.o.
Těžební 1236/1
CZ 627 00, Brno
13

6.3. Elektrické schéma / Elektroschema / Wiring diagrams – 3×230 V, PE, 50 Hz

Obsah/ Table of contents/ Inhaltsverzeichnis

Stránka/Page/Seite	Název stránky/Name page/Name Seite	Datum/Date/Datum
00	Úvodní strana/Start page/Startseite	14.1.2014
01	Obsah/ Table of contents/ Inhaltsverzeichnis	14.1.2014
02	Rozmístění prvků v rozvaděči RS1/ Placement of elements in enclosure RS1/ Platzierung der Elemente im Schaltschrank RS1	14.1.2014
03	Ovládací panel na rozvaděči/Control panel/Bedienpult	14.1.2014
04	Kusovník artiklů/ Parts list/ Artikelstückliste	14.1.2014
04.a	Kusovník artiklů/ Parts list/ Artikelstückliste	14.1.2014
04.b	Kusovník artiklů/ Parts list/ Artikelstückliste	14.1.2014
05	Silová část M1-M3 / Power part M1-M3 / Feld partie M1-M3	14.1.2014
05.a	Frekvenční měnič M4/ Speed controller M4/ Frequenzumrichte M4	14.1.2014
06	Deska zdroje/Power board/Netzgerat-Platte	14.1.2014
07	Stykače motorů, M5/Motor contactor, M5/Motor-Schutzschalter, M5	14.1.2014
08	Hydraulické ventily/Hydraulic valve/Hydroventil	14.1.2014
08.a	Hydraulické ventily/Hydraulic valve/Hydroventil	14.1.2014
09	Vstupy/Inputs/Eingange	14.1.2014
10	Tlačítka ovládací panel/Button control panel/Taste Bedienpult	14.1.2014
11	Bezpečnostní okruh/Safety circle/Sicherheitsbereich	14.1.2014
12	Řídící systém/Control system/Steuersystem	14.1.2014
13	Odměřování/Remuneration/Abmessung	14.1.2014
14	Příslušenství/Accessories/Zubehör	14.1.2014

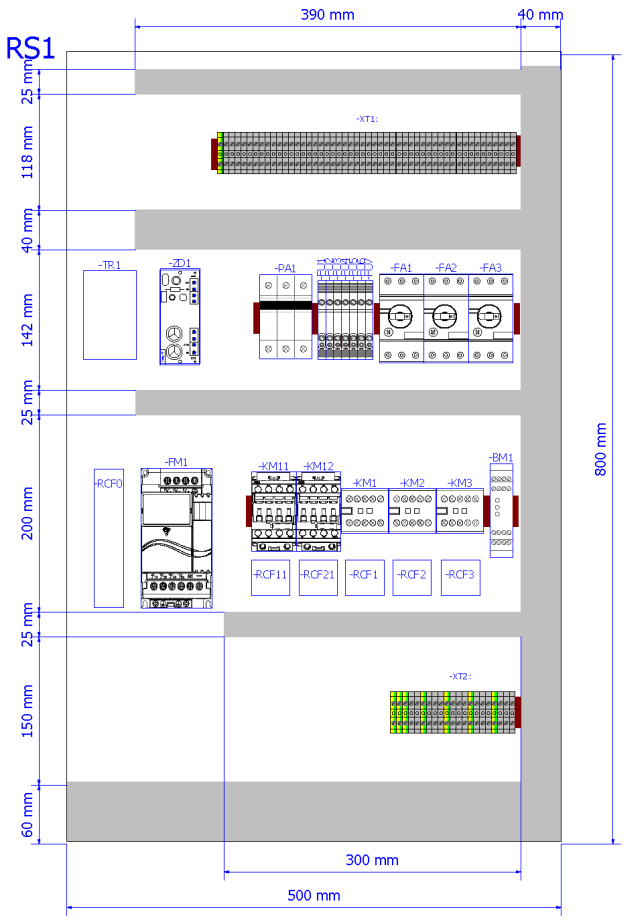

01

BOMAR, s.r.o. Těžební 1236/1 CZ 627 00, Brno	Stroj/Machine/Maschine: Proline 320.280 ANC	Název stránky/Name page/Name seiten: Rozmístění prvků v rozvaděči RS1/ Placement of elements in enclosure RS1/ Platzierung der Elemente im Schaltschrank RS1	Číslo dok./Doc.No/Anzahl der Dokumente.:	ES-R2000-203-V6.3	List/Page/Seite: 02
			Napájení/Power supply/Einspeisung:	3x230V+PE, 50Hz	Listů/Pages/Seiten: 19
			Zpracoval/Processed /Hat verarbeitet:	Pavlik	
			Datum/Date/Datum:	14.1.2014	

VersionNo. 00.00.00

Schéma
Schemas
Schematics

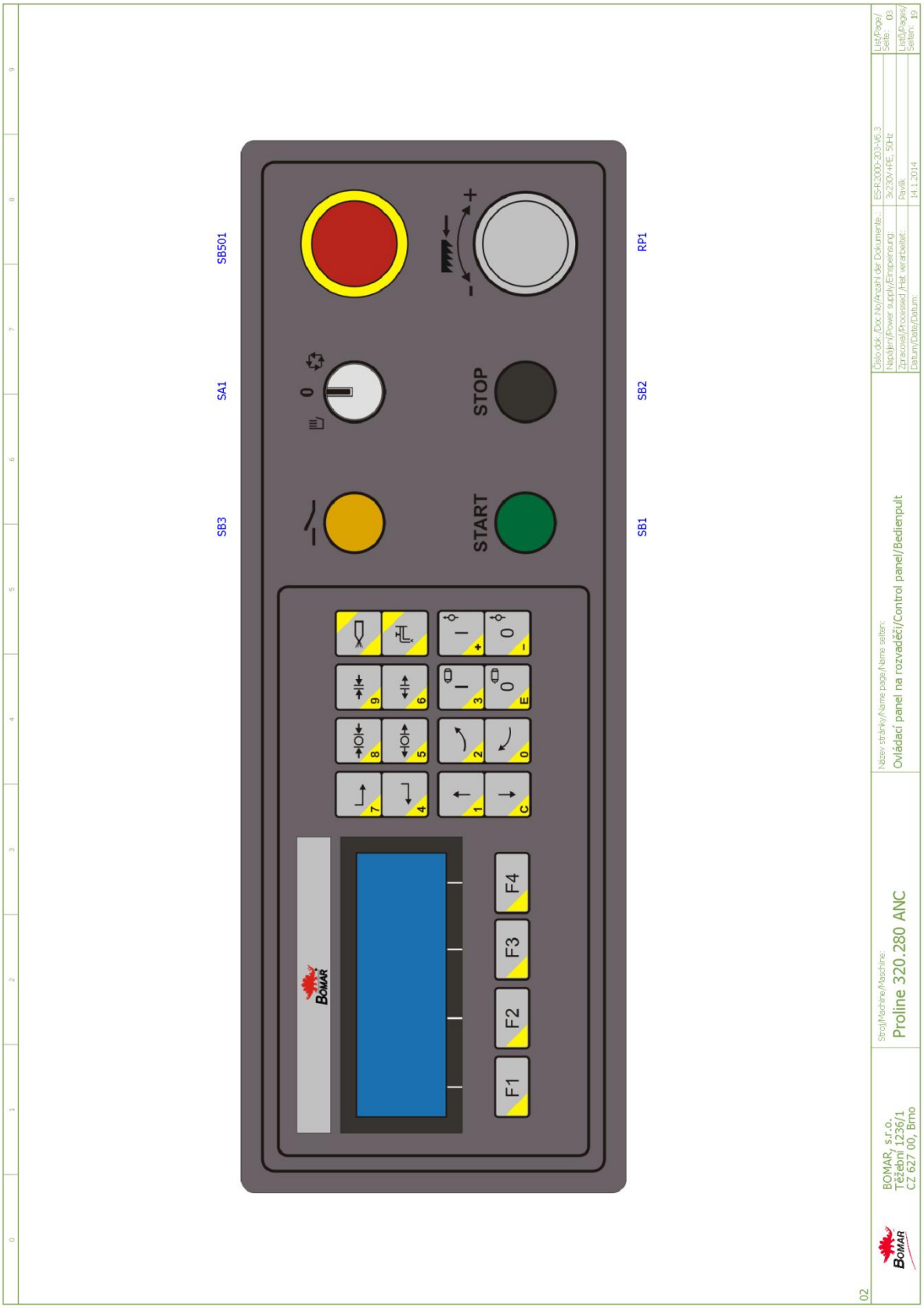
SB501
SA1
SB3
RP1
SB2
SB1
STOP
START
F1
F2
F3
F4
BOMAR, s.r.o.
Těžební 1236/1
CZ 627 00, Brno
Stroj/Machine/Maschine:
Proline 320.280 ANC
Název stránky/Name page/Name seiten:
Ovládací panel na rozvaděči/Control panel/Bedienpult
Číslo dok./Doc.No/Anzahl der Dokumente:
ESR-2000-203-V6.3
Napájení/Power supply/Einspeisung:
3x230V+PE, 50Hz
Zpracoval/Processed /Hat verarbeitet:
Pavlík
Datum/Date/Datum:
14.1.2014
List/Page/Seite: 03
List/Pages/Seiten: 19
02

Parts list

Device identification	Device description	Type number	Manufacturer	Part number	Quantity	Location (page.column)
-ZD1	Power supply unit - 15VAC/24VDC; 20VAC/28VDC	ZDR-03	Bomar	265.915	1	/06.2
-CU1	Touch-sensitive keyboard	31.R230-207	AKI ELECTRONIC,spol.s.r.o.	31.R230-207	1	/12.0
-FA1	Auxiliary Contact Block - 1xNO+1xNC	HKF1-11	ABB	91.046.002	1	/05.3
-FA2	Auxiliary Contact Block - 1xNO+1xNC	HKF1-11	ABB	91.046.002	1	/05.5
-FA3	Auxiliary Contact Block - 1xNO+1xNC	HKF1-11	ABB	91.046.002	1	/05.7
-HL1	Green light for Eaton adapter	M22-LED-G	EATON	91.061.023	1	/08.a.5
-HL2	White light for Eaton adapter	M22-LED-W	EATON	91.061.034	1	/11.7
-SA1	Head of 3 positional switch	M22-WRK3	EATON	91.060.051	1	/10.5
-SB1	Green translucent switch head	M22-DL-G	EATON	91.060.031	1	/10.2
-SB3	Yellow translucent switch head	M22-DL-Y	EATON	91.060.053	1	/11.3
-SN1	Lineare incrementa encoder - 10-30VDC/5V TTL line driver	LMIX2-026-08.0-1-01	ELGO	91.270.006	1	/13.4
-FU1	Tube fuse - 2A/250V, slow, 5x20	T2A/250V	ESKA	91.230.001	1	/06.1
-FU2	Tube fuse - 2A/250V, slow, 5x20	T2A/250V	ESKA	91.230.001	1	/06.1
-FU3	Tube fuse - 500mA/250V, slow, 5x20	T500mA/250V	ESKA	91.230.011	1	/06.5
-FU6	Tube fuse - 6,3A/250V, slow, 5x20	T6,3A/250V	ESKA	91.230.002	1	/06.5
-RP1	Potenciometr 4k7	TP195 4k7/N20A	GES-ELECTRONICS, a.s.	91.283.015	1	/05.a.6
-RP1	Potentiometer knob - 24mm	S8877 BLK	GES-ELECTRONICS, a.s.	91.060.063	1	/05.a.6
-RCF1	RCF filter	FBOPR1624	Ing. Miroslav Vlček	91.041.015	1	/05.2
-RCF2	RCF filter	FBOPR1624	Ing. Miroslav Vlček	91.041.015	1	/05.4
-RCF3	RCF filter	FBOPR1624	Ing. Miroslav Vlček	91.041.015	1	/05.6
-RCF11	RCF filter	FBOPR1624	Ing. Miroslav Vlček	91.041.015	1	/05.a.2
-RCF21	RCF filter	FBOPR1624	Ing. Miroslav Vlček	91.041.015	1	/05.a.2
-BM1	Safety relay - 3xNO	CS AR-02M024	PIZZATO	91.051.034	1	/11.5
-FA1	Manual motor starter - 0.63A	MS116-0,63	ABB	91.045.018	1	/05.3
-FA2	Manual motor starter - 1.6A	MS116-1,6	ABB	91.045.020	1	/05.5
-FA3	Manual motor starter - 6.3A	MS116-6,3	ABB	91.045.023	1	/05.7
-FU1	Fuse terminal	WK4/THSi5U	WIELAND	91.251.102	1	/06.1
-FU2	Fuse terminal	WK4/THSi5U	WIELAND	91.251.102	1	/06.1

The manufacturer reserves right to use an equivalent replacement device.

Parts list

Device identification	Device description	Type number	Manufacturer	Part number	Quantity	Location (page.column)
-FU3	Fuse terminal	WK4/THSi5U	WIELAND	91.251.102	1	/06.5
-FU4	Fuse terminal	WK4/THSi5U	WIELAND	91.251.102	1	/06.5
-FU4	Tube fuse - 800mA/250V, slow, 5x20	T800mA/250V	ESKA	91.230.010	1	/06.5
-FU5	Fuse terminal	WK4/THSi5U	WIELAND	91.251.102	1	/06.5
-FU5	Tube fuse - 1A/250V, slow, 5x20	T1A/250V	ESKA	91.230.031	1	/06.5
-FU6	Fuse terminal	WK4/THSi5U	WIELAND	91.251.102	1	/06.5
-FU7	Tube fuse - 200mA/250V, slow, 5x20	T200mA/250V	ESKA	91.230.037	1	/14.1
-FU7	Fuse terminal	WK4/THSi5U	WIELAND	91.251.102	1	/14.1
-KM1	Minicontactor - 4kW/400V, 3P	B6S-30-01-1.7-71	ABB	91.040.049	1	/07.2
-KM2	Minicontactor - 4kW/400V, 3P	B6S-30-01-1.7-71	ABB	91.040.049	1	/07.4
-KM3	Minicontactor - 4kW/400V, 3P	B6S-30-01-1.7-71	ABB	91.040.049	1	/07.5
-KM11	Contactor - 5,5kW/400V, 3P	AF12-30-01-11	ABB	91.040.051	1	/11.7
-KM12	Contactor - 5,5kW/400V, 3P	AF12-30-01-11	ABB	91.040.051	1	/11.8
-PA1	Fuse switch disconnector E-90 - 3P	E 93/32	ABB	91.241.014	1	/05.a.3
-QS1	Handle switch - black	OHBS2RJ	ABB	91.180.015	1	/05.0
-RP1	Fastconnect clamp	WAGO 224-112	WIELAND	91.250.009	3	/05.a.6
-SA1	Attaching adapter + 1NO	M22-AK10	EATON	91.061.021	1	/10.5
-SA1	NO contact for Eaton adapter	M22-K10	EATON	91.061.022	1	/10.5
-SB1	Attaching adapter + 1NO	M22-AK10	EATON	91.061.021	1	/10.2
-SB2	Attaching adapter + 1NO	M22-AK10	EATON	91.061.021	1	/10.3
-SB2	Switch head - black	M22-D-S	EATON	91.060.035	1	/10.3
-SB3	Attaching adapter + 1NO	M22-AK10	EATON	91.061.021	1	/11.3
-SB501	Emergency-stop mushroom push - button + 3xNC	YW1B-V4E02R	IDEC	91.060.084	1	/11.1
-TR1	Toroidal transformer - 0-230-400V/20V/15V, 0.65-0.38A/6A/2A, 150VA	1502304002015	KARBAN s.r.o.	91.080.026	1	/06.2
-SQ8	Safety limit switch - 2xNC	QKS8	KEDU	91.173.012	1	/11.1
-PA1	Cylindric fuse - 16A, 10x38 fast, gG charakteristic	PV10 16A gG	OEZ	91.230.020	3	/05.a.3
-SQ3	Limit switch - 1NC+1NO	D4N-4A31	OMRON	91.173.007	1	/09.2
-SQ4	Limit switch - 1NO + 1NC, roller, M2, snap action	FR 605-M2	PIZZATO	91.173.009	1	/09.3

The manufacturer reserves right to use an equivalent replacement device.

04

Parts list

Device identification	Device description	Type number	Manufacturer	Part number	Quantity	Location (page.column)
-SQ5	Limit switch - 1NO + 1NC, roller, M2, snap action	FR 605-M2	PIZZATO	91.173.009	1	/09.4
-SQ6	Limit switch - 1NO + 1NC	FR 615-M2	PIZZATO	91.173.044	1	/09.5
-SQ7	Limit switcher - 1NO + 1NC, large adjustable roller, M2, snap action	FR 655-M2	PIZZATO	91.173.045	1	/09.6
-LQ1.A	Sensor cable	MOD.14/4 M12 SL LC10	SICK	91.142.001	1	/09.7
-LQ1.B	Sensor cable	MOD.15/4 M12 SL LC10	SICK	91.142.002	1	/09.8
-QS1	Disconnector - 3P,40A	OT40FT3	ABB	91.170.019	1	/05.0
-CU1	Control circuit	PRO-5.X	Bomar	265.917	1	/12.0
-FM1	AC motor drive - 2.2kW, 3x230VAC	VFD022EL23A	DELTA ELECTRONICS, INC.	91.012.147	1	/05.a.2
-RCF0	RCF filter - 5.5 kW, 3x400V, 25A	ATV31/5,5KW	Ing. Miroslav Vlček	91.041.027	1	/05.a.2
-M5	Fan 24VDC, 154CFM	RDH1238 B2	Xinruilian Electronic Co.	91.015.126	1	/07.7
-QS1	Terminal shroud	OTS40T3	ABB	91.170.017	1	/05.0

The manufacturer reserves right to use an equivalent replacement device.

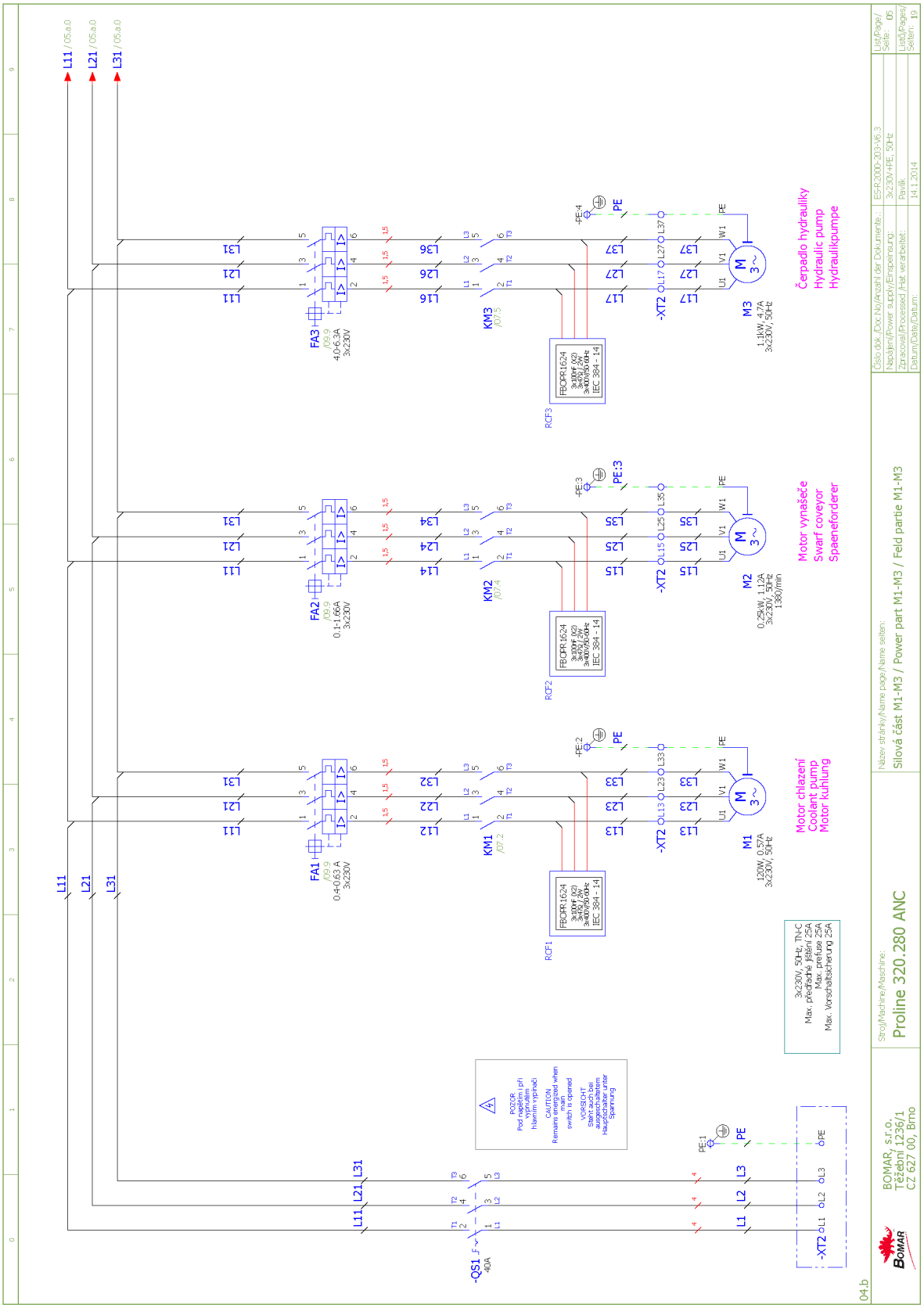
L11 / 05.a.0
L21 / 05.a.0
L31 / 05.a.0
FA1
FA2
FA3
KM1
KM2
KM3
RCF1
RCF2
RCF3
M1
M2
M3
-XT2
-QS1
Čerpadlo hydrauliky
Hydraulic pump
Hydraulikpumpe
Motor vynašeče
Swarf coveyor
Spaeneforderer
Motor chlazení
Coolant pump
Motor kühlung
3x230V, 50Hz, TN-C
Max. předřadné jištění 25A
Max. prefuse 25A
Max. Vorsicherung 25A
BOMAR, s.r.o.
Těžební 1236/1
CZ 627 00, Brno
Stroj/Machine/Maschine:
Proline 320.280 ANC
Název stránky/Name page/Name seiten:
Silová část M1-M3 / Power part M1-M3 / Feld partie M1-M3
List/Page/Seite: 05
List/Pages/Seiten: 19
04.b

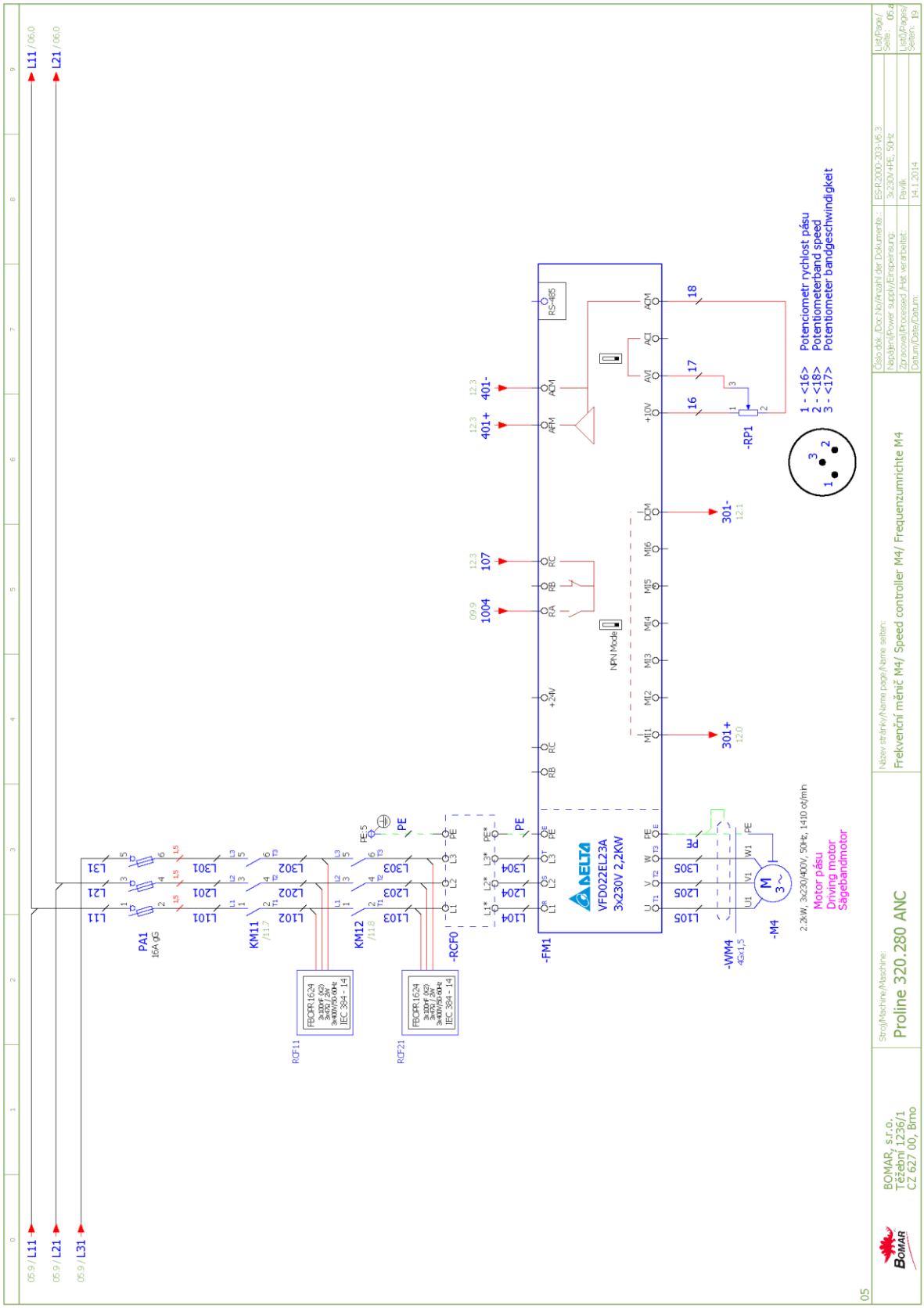
L11 / 06.0
L21 / 06.0
05.9 / L11
05.9 / L21
05.9 / L31
PA1
16A gG
KM11
KM12
RCF11
RCF21
-RCF0
-FM1
DELTA
VFD022EL23A
3x230V 2,2KW
RS-485
401+
401-
107
1004
301+
301-
-RP1
1 - <16> Potenciometr rychlost pásu
2 - <18> Potentiometerband speed
3 - <17> Potentiometer bandgeschwindigkeit
-WM4
-M4
2,2kW, 3x230/400V, 50Hz, 1410 ot/min
Motor pásu
Driving motor
Sägebandmotor
Číslo dok. /Doc.No/Anzahl der Dokumente: ES-R-2000-203-V6.3
Napájení/Power supply/Einspeisung: 3x230V+PE, 50Hz
Zpracoval/Processed /Hat verarbeitet: Pavlík
Datum/Date/Datum: 14.1.2014
List/Page/Seite: 05.a
List(s)/Pages/Seiten: 19
Název stránky/Name page/Name seiten:
Frekvenční měnič M4/ Speed controller M4/ Frequenzumrichte M4
Stroj/Machine/Maschine:
Proline 320.280 ANC
BOMAR, s.r.o.
Třešňová 1236/1
CZ 627 00, Brno
05

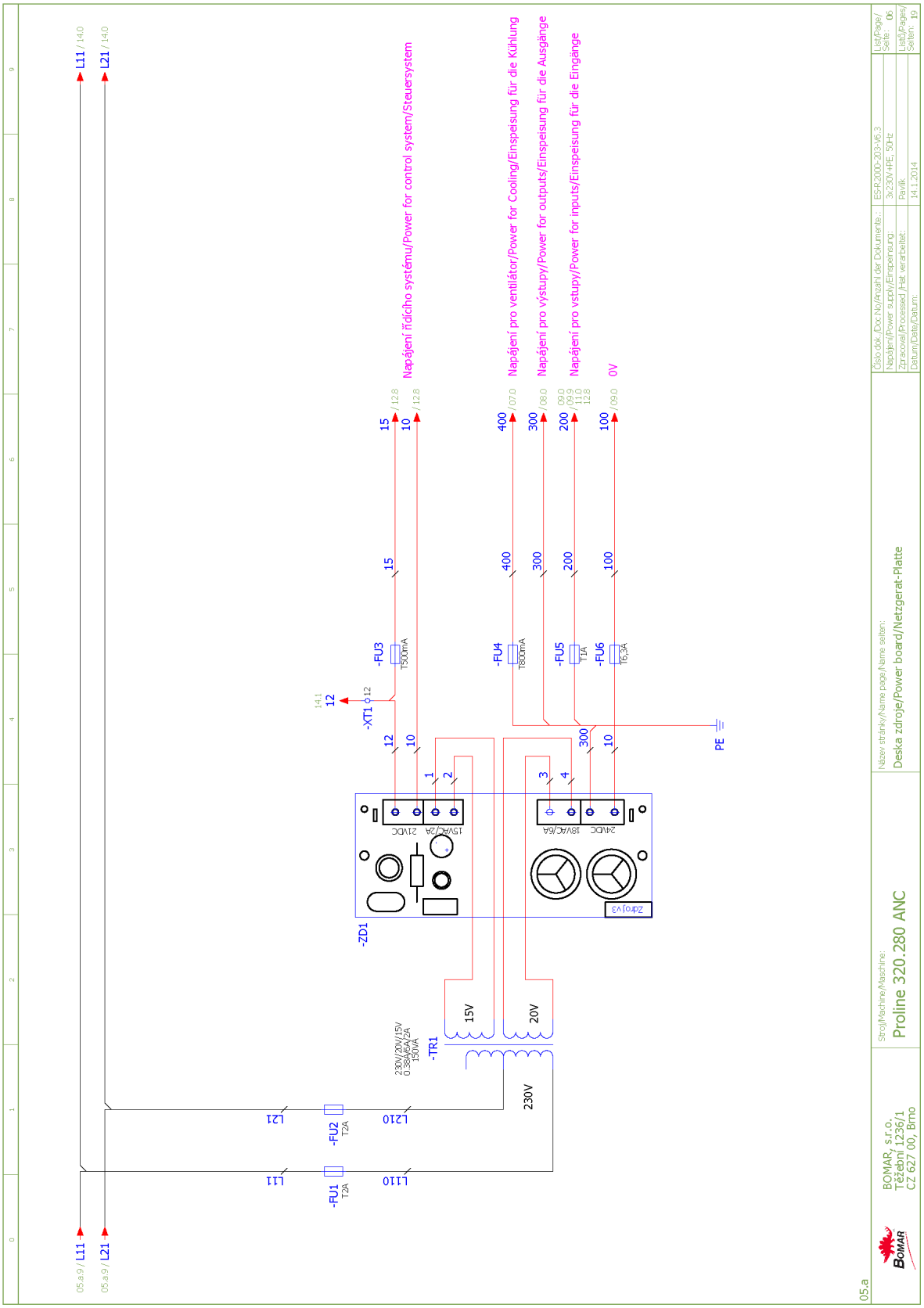
L11 / 14.0
L21 / 14.0
Napájení řídicího systému/Power for control system/Steuersystem
Napájení pro ventilátor/Power for Cooling/Einspeisung für die Kühlung
Napájení pro výstupy/Power for outputs/Einspeisung für die Ausgänge
Napájení pro vstupy/Power for inputs/Einspeisung für die Eingänge
0V
-FU3
T500mA
-FU4
T500mA
-FU5
T1A
-FU6
T6,3A
-XT1
-ZD1
-TR1
230V/20V/15V
0,38A/6A/2A
150VA
15V
20V
230V
-FU1
T2A
-FU2
T2A
PE
Zdroj v3
21VDC
15V/AC/2A
24VDC
18V/AC/6A
05.a 9 / L11
05.a 9 / L21
BOMAR, s.r.o.
Těžební 1236/1
CZ 627 00, Brno
Stroj/Machine/Maschine:
Proline 320.280 ANC
Název stránky/Name page/Name seiten:
Deska zdroje/Power board/Netzgerat-Platte
Číslo dok./Doc.No/Anzahl der Dokumente:: ES-R-2000-203-V6.3
Napájení/Power supply/Einspeisung: 3x230V+PE, 50Hz
Zpracoval/Processed /Hat verarbeitet: Pavlík
Datum/Date/Datum: 14.1.2014
List/Page/Seite: 06
List/Pages/Seiten: 19
05.a

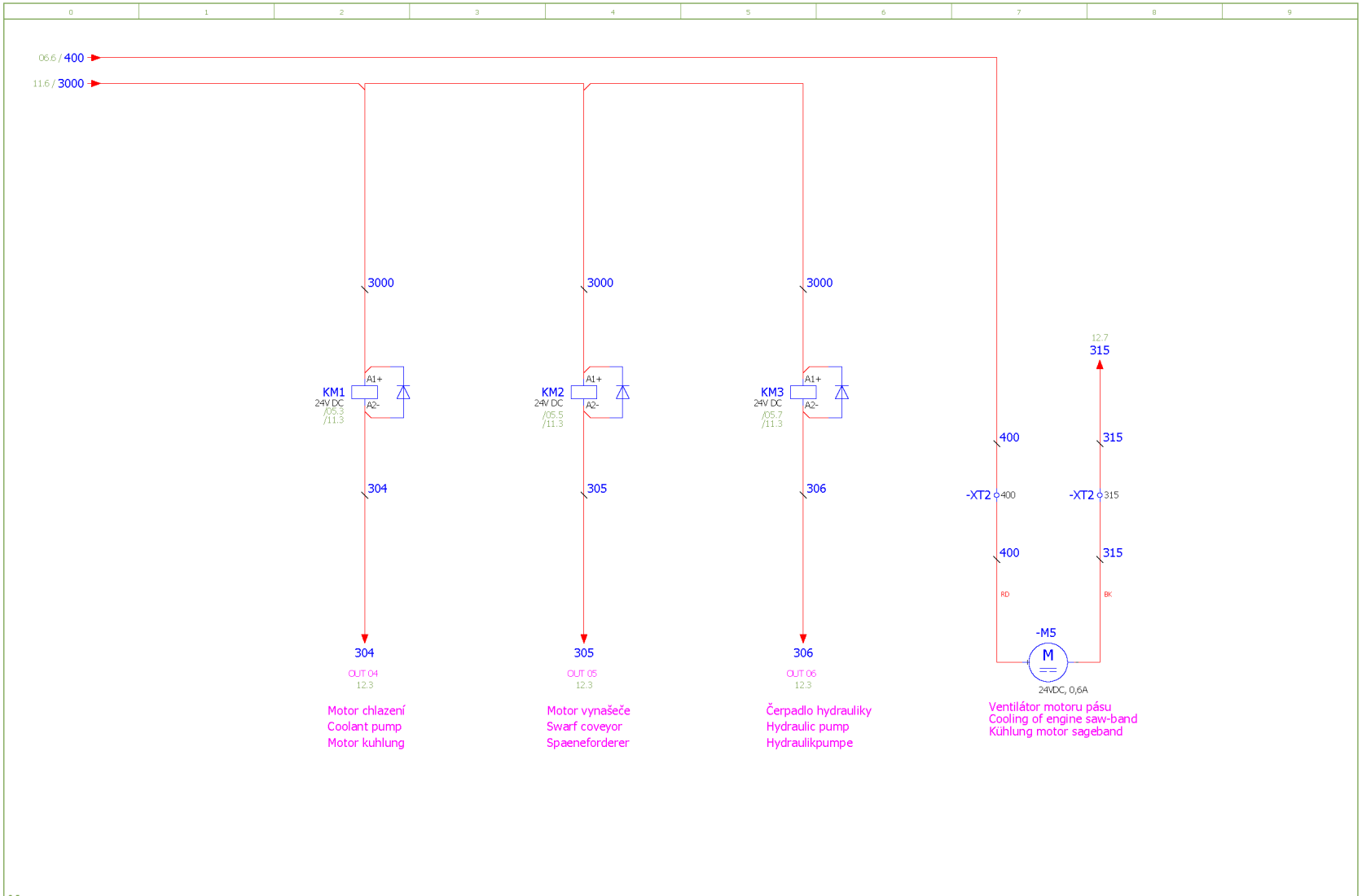

06

BOMAR, s.r.o. Těžební 1236/1 CZ 627 00, Brno	Stroj/Machine/Maschine: Proline 320.280 ANC	Název stránky/Name page/Name seiten: Stykače motorů, M5/Motor contactor, M5/Motor-Schutzschalter, M5	Číslo dok./Doc.No/Anzahl der Dokumente.:	ES-R2000-203-V6.3	List/Page/Seite: 07
			Napájení/Power supply/Einspeisung:	3x230V+PE, 50Hz	Listů/Pages/Seiten: 19
			Zpracoval/Processed /Hat verarbeitet:	Pavlik	
			Datum/Date/Datum:	14.1.2014	

VersionNo. 00.00.00

Schéma
Schemas
Schematics

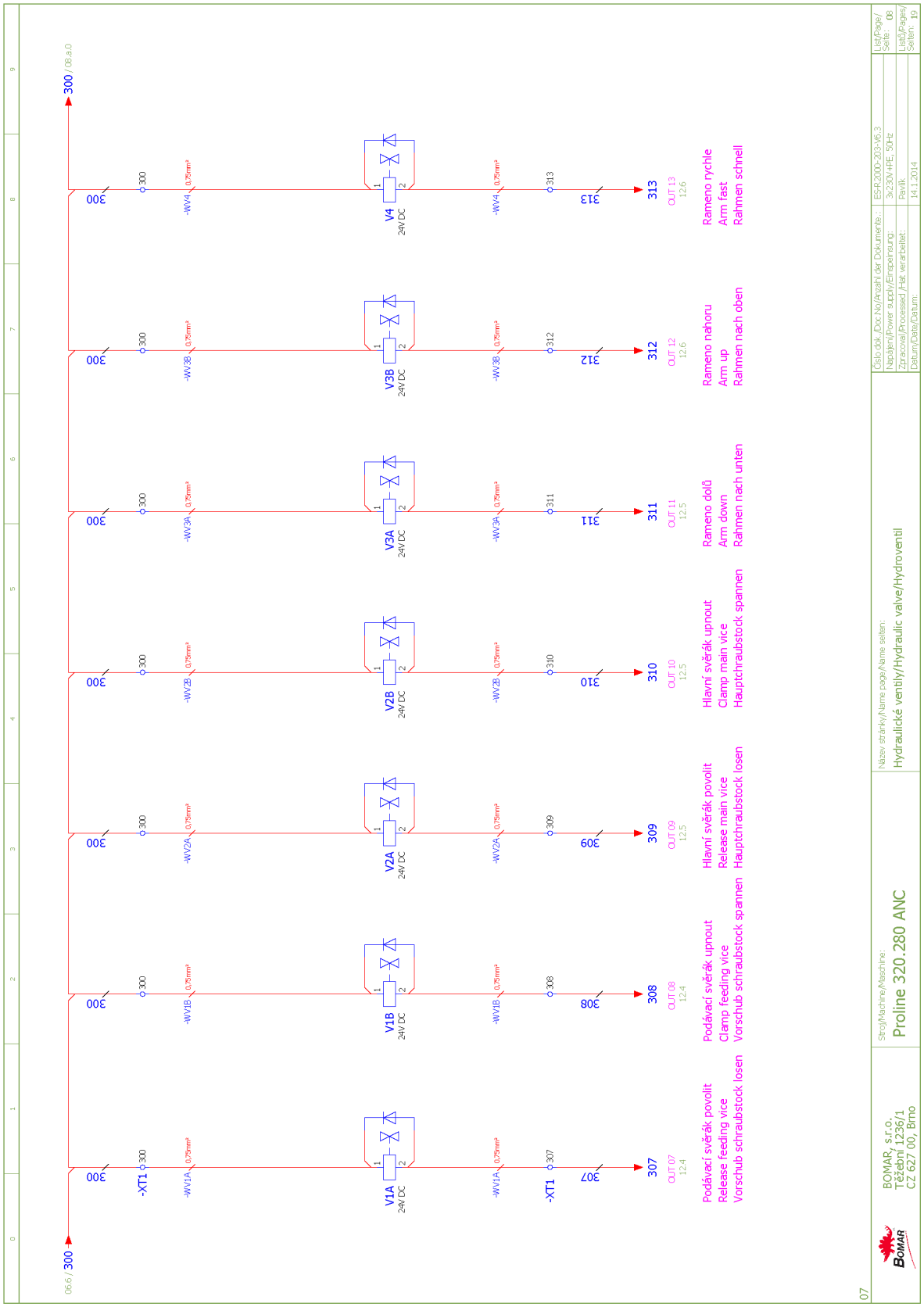
06.6 / 300
300 / 06.a.0
-XT1
V1A 24V DC
V1B 24V DC
V2A 24V DC
V2B 24V DC
V3A 24V DC
V3B 24V DC
V4 24V DC
307
308
309
310
311
312
313
Podávací svěrák povolit
Release feeding vice
Vorschub schraubstock losen
Podávací svěrák upnout
Clamp feeding vice
Vorschub schraubstock spannen
Hlavní svěrák povolit
Release main vice
Hauptchraubstock losen
Hlavní svěrák upnout
Clamp main vice
Hauptchraubstock spannen
Rameno dolů
Arm down
Rahmen nach unten
Rameno nahoru
Arm up
Rahmen nach oben
Rameno rychle
Arm fast
Rahmen schnell
BOMAR, s.r.o.
Těžební 1236/1
CZ 627 00, Brno
Stroj/Machine/Maschine:
Proline 320.280 ANC
Název stránky/Name page/Name seiten:
Hydraulické ventily/Hydraulic valve/Hydroventil
Číslo dok./Doc.No/Anzahl der Dokumente: :
ES-R-2000-203-V6.3
Napájení/Power supply/Einspeiseung:
3x230V+PE, 50Hz
Zpracoval/Processed /Hat verarbeitet:
Pavlík
Datum/Date/Datum:
14.1.2014
List/Page/Seite: 08
List/Pages/Seiten: 19
07

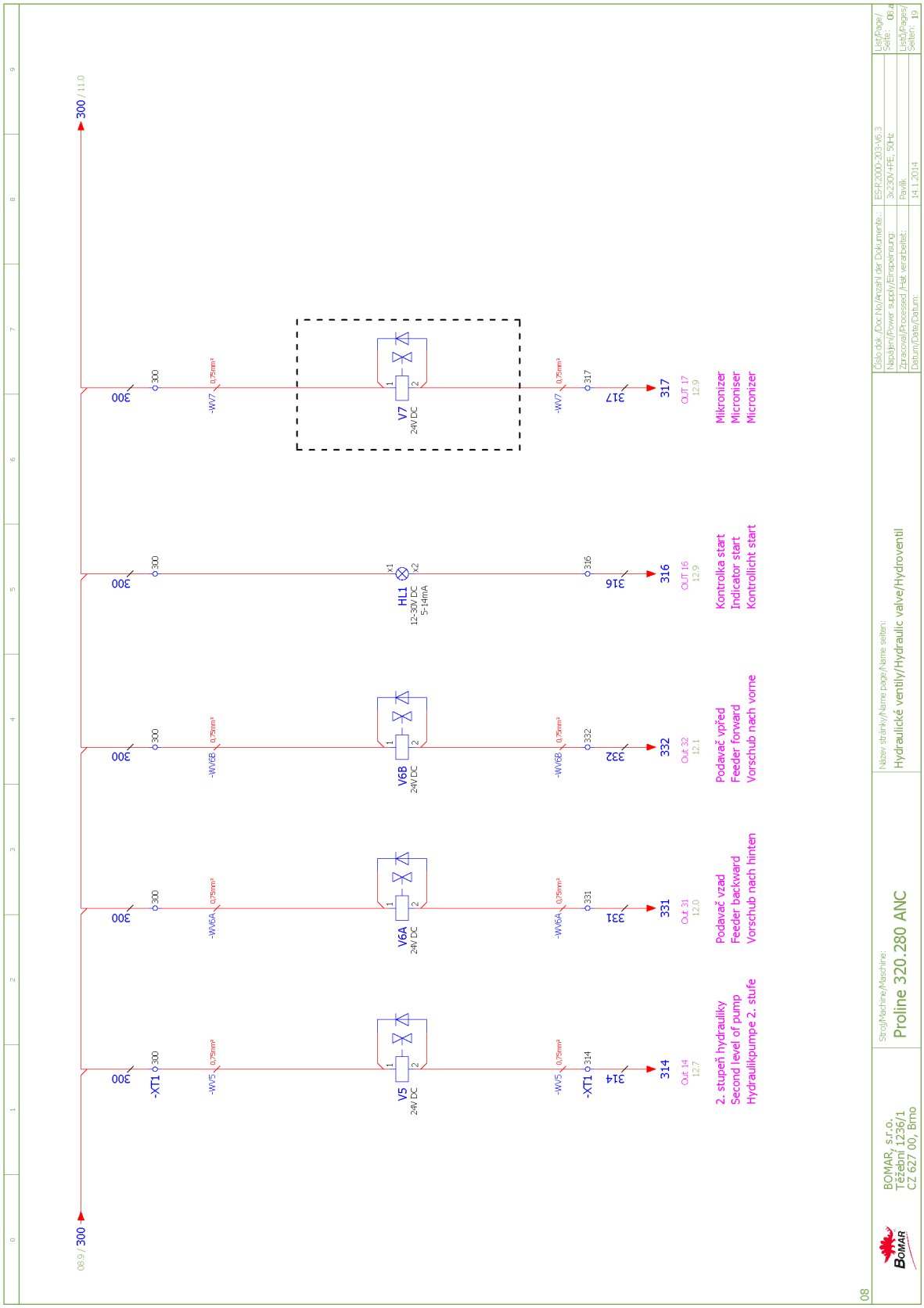
08.9 / 300
300 / 11.0
-XT1
-WV5
-WV6A
-WV6B
-WV7
V5
24V DC
V6A
24V DC
V6B
24V DC
HL1
12-30V DC
5-14mA
V7
24V DC
314
331
332
316
317
2. stupeň hydrauliky
Second level of pump
Hydraulikpumpe 2. stufe
Podavač vzad
Feeder backward
Vorschub nach hinten
Podavač vpřed
Feeder forward
Vorschub nach vorne
Kontrolka start
Indicator start
Kontrollicht start
Mikronizer
Microniser
Micronizer
BOMAR, s.r.o.
Třebíčská 1236/1
CZ 627 00, Brno
Stroj/Machine/Maschine:
Proline 320.280 ANC
Název stránky/Name page/Name seiten:
Hydraulické ventily/Hydraulic valve/Hydroventil
Číslo dok./Doc.No/Anzahl der Dokumente:
ESF-R2000-203-V6.3
Napájení/Power supply/Einspeisung:
3x230V+PE, 50Hz
Zpracoval/Processed /Hat verarbeitet:
Pavlík
Datum/Date/Datum:
14.1.2014
List/Page/Seite: 08.a
List(s)/Pages/Seiten: 19
08

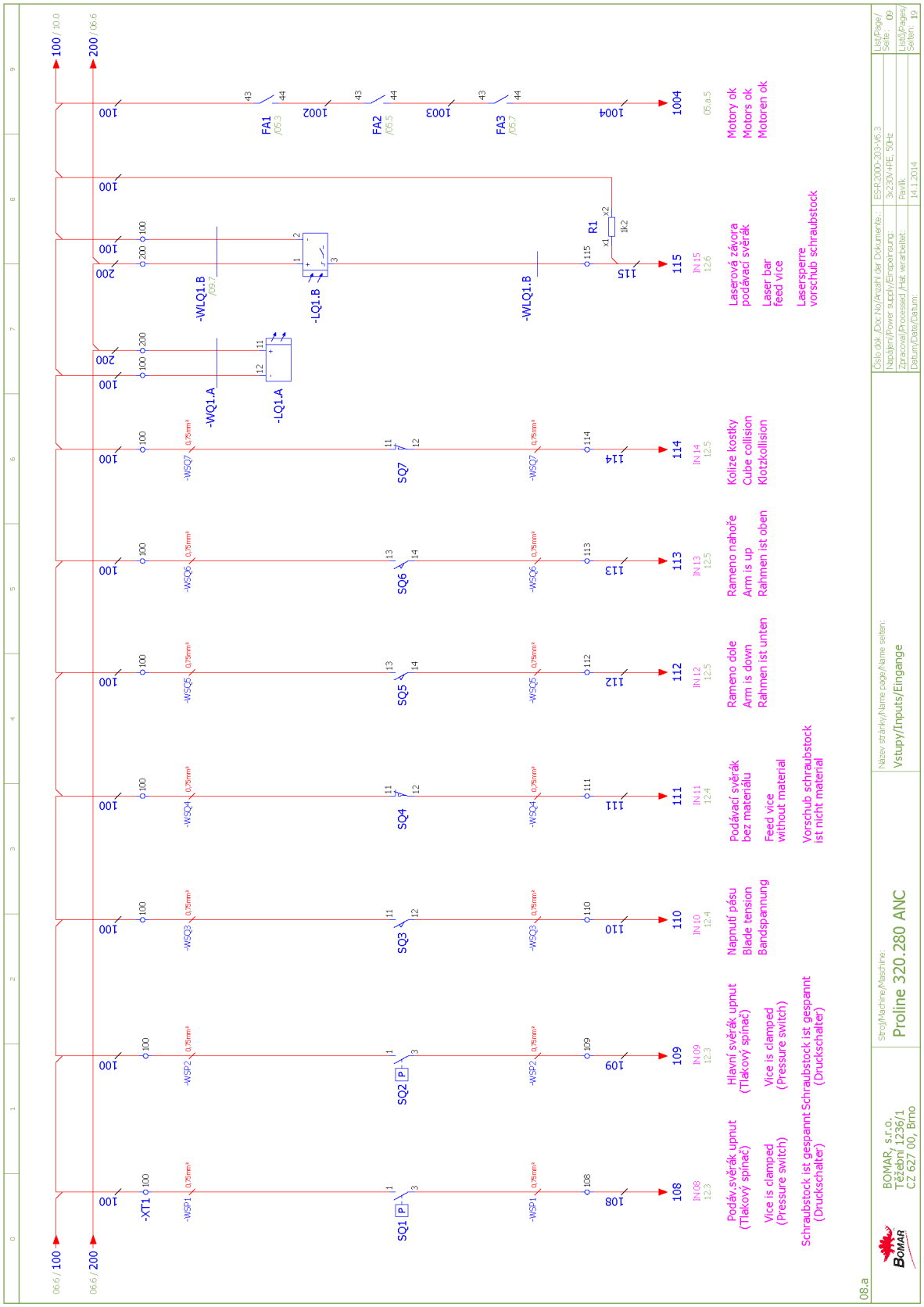
Podáv.svěrák upnut (Tlákový spínač)
Vice is clamped (Pressure switch)
Schraubstock ist gespannt (Druckschalter)
Hlavní svěrák upnut (Tlákový spínač)
Vice is clamped (Pressure switch)
Schraubstock ist gespannt (Druckschalter)
Napnutí pásu
Blade tension
Bandspannung
Podávací svěrák bez materiálu
Feed vice without material
Vorschub schraubstock ist nicht material
Rameno dole
Arm is down
Rahmen ist unten
Rameno nahoře
Arm is up
Rahmen ist oben
Kolize kostky
Cube collision
Klotzkollision
Laserová závora podávací svěrák
Laser bar feed vice
Laserspere vorschub schraubstock
Motory ok
Motors ok
Motoren ok
BOMAR, s.r.o.
Těžební 1236/1
CZ 627 00, Brno
Stroj/Machine/Maschine:
Proline 320.280 ANC
Název stránky/Name page/Name seiten:
Vstupy/Inputs/Eingange
ES-R2000-203-V6.3
3x230V+PE, 50Hz
Pavlík
14.1.2014
Číslo dok./Doc.No/Anzahl der Dokumente:
Napájení/Power supply/Einspeisung:
Zpracoval/Processed /Hat verarbeitet:
Datum/Date/Datum:
List/Page/Seite: 09
List/Pages/Seiten: 19
08.a

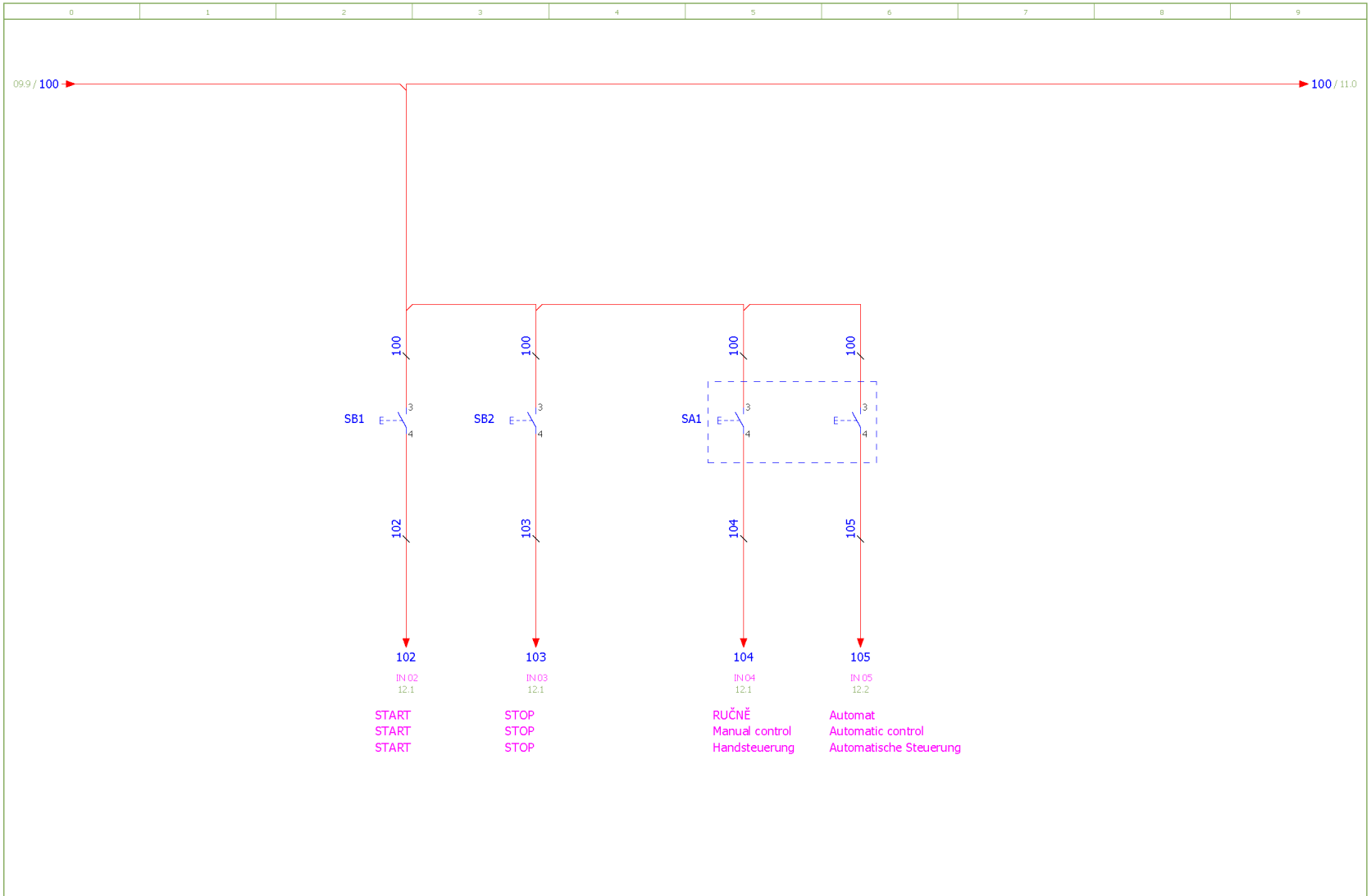

09

BOMAR, s.r.o. Těžební 1236/1 CZ 627 00, Brno	Stroj/Machine/Maschine: Proline 320.280 ANC	Název stránky/Name page/Name seiten: Tlačítka ovládací panel/Button control panel/Taste Bedienpult	Číslo dok./Doc.No/Anzahl der Dokumente.: ES-R.2000-203-V6.3 Napájení/Power supply/Einspeinsung: 3x230V+PE, 50Hz Zpracoval/Processed /Hat verarbeitet: Pavlik Datum/Date/Datum: 14.1.2014	List/Page/Seite: 10 Listů/Pages/Seiten: 19

VersionNo. 00.00.00

Schéma
Schemas
Schematics

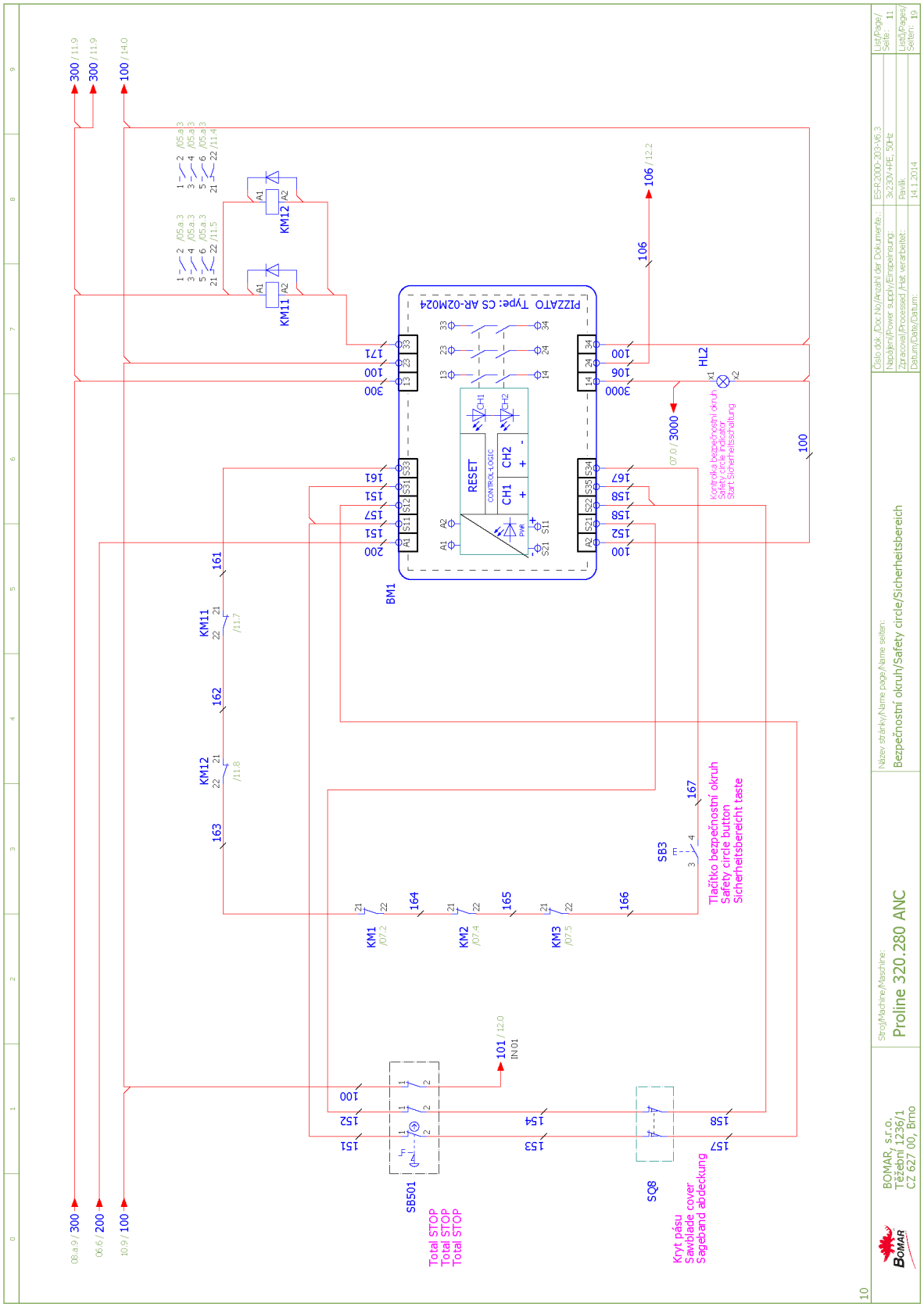
PIZZATO Type: CS AR-02M024
RESET
CONTROL-LOGIC
CH1
CH2
BM1
KM11
KM12
KM1
KM2
KM3
SB3
SB501
SQ8
HL2
Tlačítko bezpečnostní okruh
Safety circle button
Sicherheitsbereicht taste
Total STOP
Total STOP
Total STOP
Kryt pásu
Sawblade cover
Sageband abdeckung
Kontrolka bezpečnostní okruh
Safety circle indicator
Start Sicherheitsschaltung
Číslo dok./Doc.No/Anzahl der Dokumente: ES-R-2000-203-V6.3
Napájení/Power supply/Einspeisung: 3x230V+PE, 50Hz
Zpracoval/Processed /Hat verarbeitet: Pavlík
Datum/Date/Datum: 14.1.2014
List/Page/Seite: 11
Listů/Pages/Seiten: 19
Název stránky/Name page/Name seiten:
Bezpečnostní okruh/Safety circle/Sicherheitsbereich
Stroj/Machine/Maschine:
Proline 320.280 ANC
BOMAR, s.r.o.
Těžební 1236/1
CZ 627 00, Brno
10

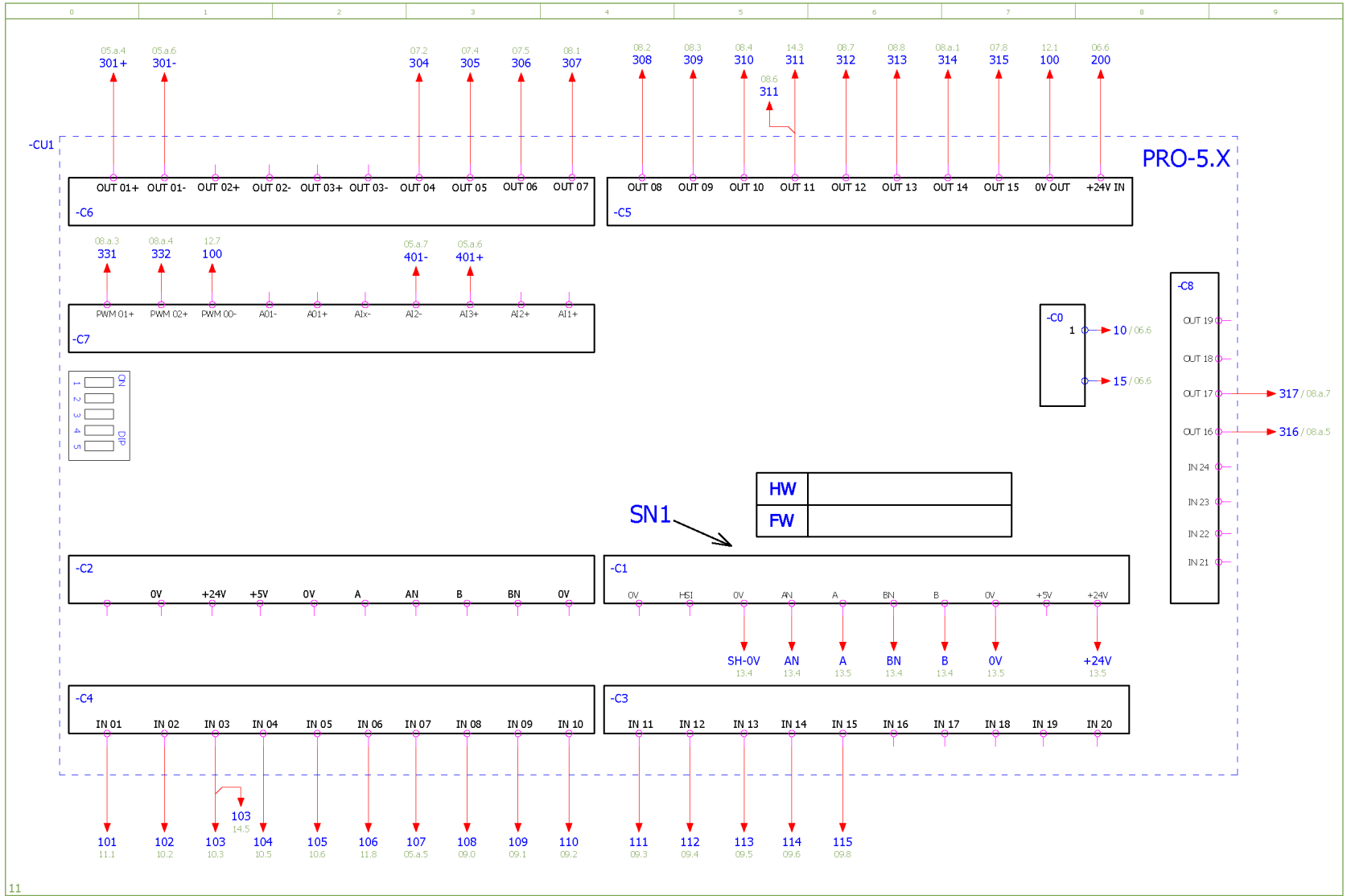

BOMAR, s.r.o.
Těžební 1236/1
CZ 627 00, Brno

Stroj/Machine/Maschine: Proline 320.280 ANC

Název stránky/Name page/Name seiten: Řídící systém/Control system/Steuersystem

Číslo dok./Doc.No/Anzahl der Dokumente.:	ES-R2000-203-V6.3
Napájení/Power supply/Einspeisung:	3x230V+PE, 50Hz
Zpracoval/Processed /Hat verarbeitet:	Pavlik
Datum/Date/Datum:	14.1.2014

List/Page/Seite: 12
Listů/Pages/Seiten: 19

Schéma
Schemas
Schematics

VersionNo. 00.00.00

SN1		Kabel HELU-Flexi 7x0.14
+	HNĚDÁ BROWN BRAUN	HNĚDÁ+MODRÁ BROWN+BLUE BRAU+BLAU
-	BÍLÁ WHITE WEIS	HNĚDÁ/BÍLÁ+MODRÁ/BÍLÁ BROWN/WHITE+BLUE/WHITE BRAUN/WEIS+BLAU/WEIS
A	ZELENÁ GREEN GRÜN	ZELENÁ GREEN GRUN
AN	FIALOVÁ VIOLET VIOLET	ZELENÁ/BÍLÁ GREEN/WHITE GRUN/WEIS
B	ŽLUTÁ YELLOW GELB	ORANŽOVÁ ORANGE ORANGE
BN	ORANŽOVÁ ORANGE ORANGE	ORANŽOVÁ/BÍLÁ ORANGE/WHITE ORANGE/WEIS
	ČERNÁ BLACK SCHWARZ	STÍNĚNÍ SHIELD LEITUNGSSCHIRM

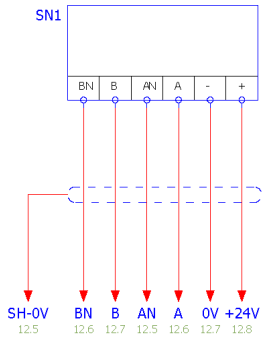

12

BOMAR, s.r.o. Těžební 1236/1 CZ 627 00, Brno	Stroj/Machine/Maschine: Proline 320.280 ANC	Název stránky/Name page/Name seiten: Odměřování/Remuneration/Abmessung	Číslo dok./Doc.No/Anzahl der Dokumente.: ES-R.2000-203-V6.3 Napájení/Power supply/Einspeinsung: 3x230V+PE, 50Hz Zpracoval/Processed /Hat verarbeitet: Pavlik Datum/Date/Datum: 14.1.2014	List/Page/Seite: 13 Listů/Pages/Seiten: 19

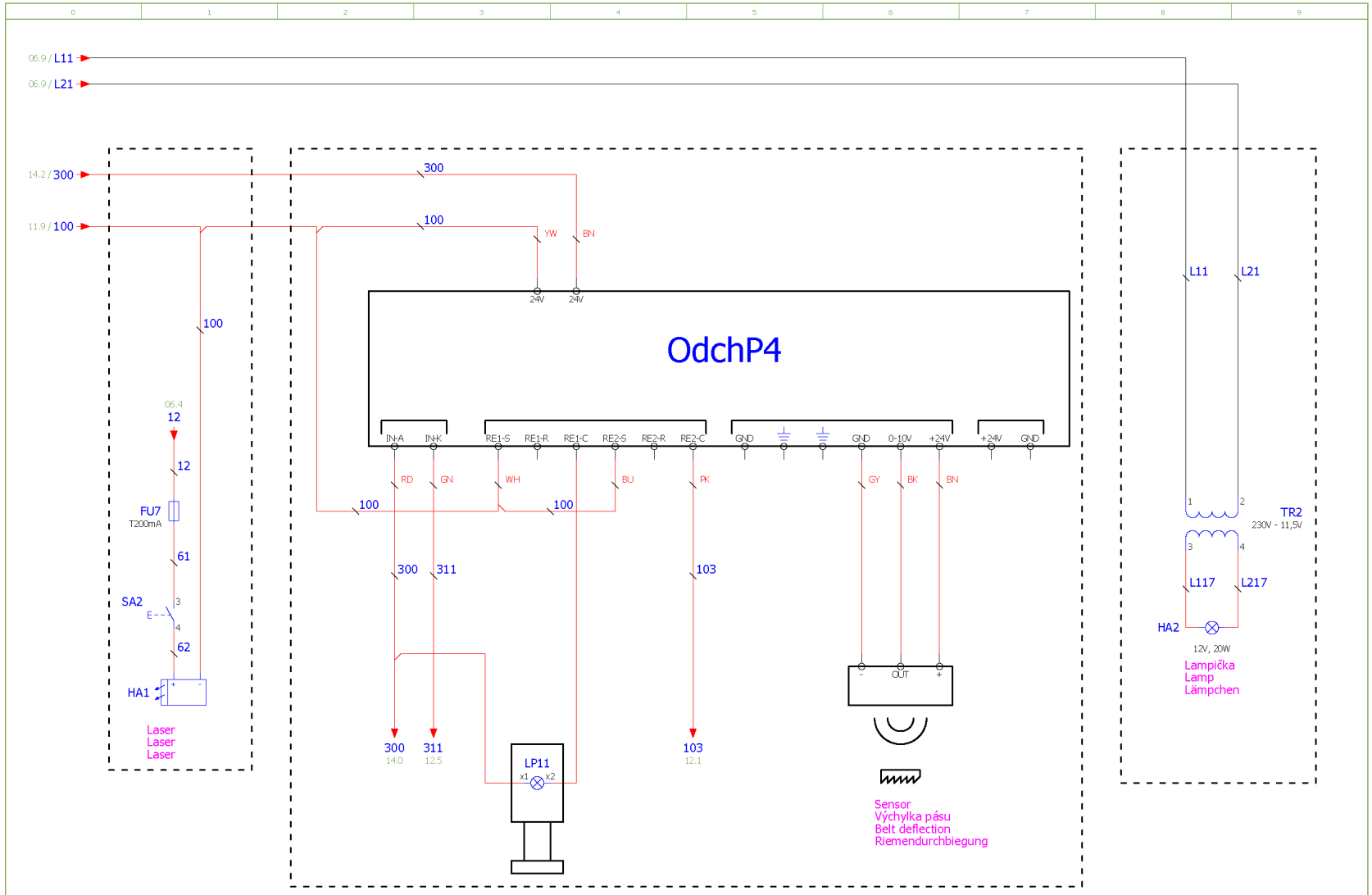

13

BOMAR, s.r.o. Těžební 1236/1 CZ 627 00, Brno	Stroj/Machine/Maschine: Proline 320.280 ANC	Název stránky/Name page/Name seiten: Příslušenství/Accessories/Zubehör	Číslo dok./Doc.No/Anzahl der Dokumente.:	ES-R.2000-203-V6.3	List/Page/Seite: 14
			Napájení/Power supply/Einspeisung:	3x230V+PE, 50Hz	
			Zpracoval/Processed /Hat verarbeitet:	Pavlik	Listů/Pages/Seiten: 19
			Datum/Date/Datum:	14.1.2014	

VersionNo. 00.00.00

Schéma
Schemas
Schematics

6.4. Hydraulické schéma / Hydraulikschema / Hydraulic diagram

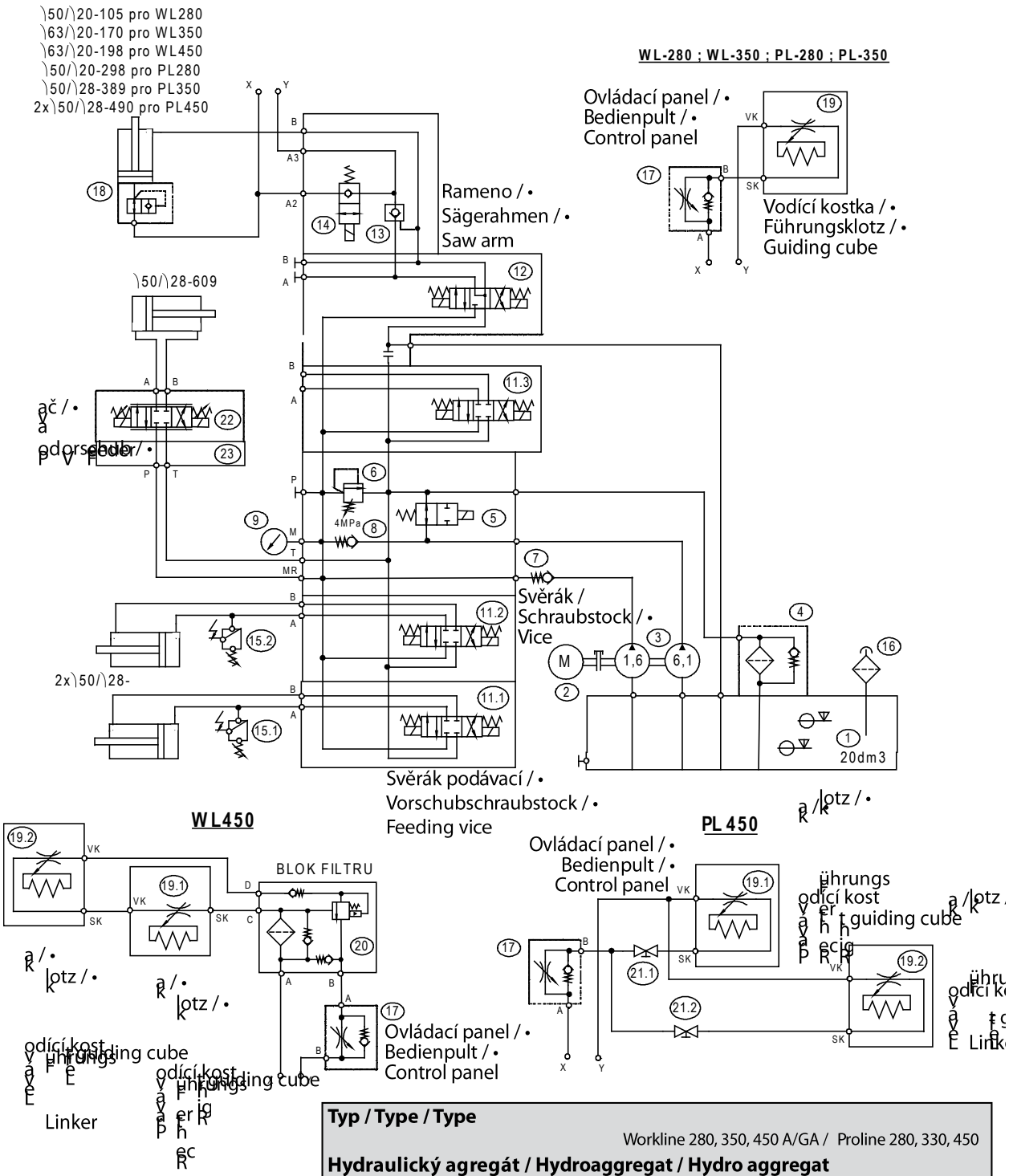

Typ / Type / Type	Workline 280, 350, 450 A/GA / Proline 280, 330, 450
Hydraulický agregát / Hydroaggregat / Hydro aggregat	92.001.070 (FMW), 5001-058-1, P PM-AC13-PG11/61-1,6-TM20-CB03-FR
Neuvedené světlosti / Unerwähnt Lichtbreite / Unlisted inside diameters	JS6
Výstupní šroubení / Ausgangschraubung / Output screewing	G1/4"

Pmax	5,5 MPa
Q	8+2,1 dm³/min
n	1400 rpm
P	1,1 kW

Poz.	Název položky		ks
Pos.	Bezeichnung		Menge
Pos.	Item		Pcs.
1	Nádrž / Behälter / Tank	TS20, S309-009-1-02 20 l	1
2	Elektromotor / Elektromotor / Electromotor	EM 90 1,1 kW/3 B34 400/230 V, 50 Hz	1
3	Hydrogenerátor / Hydraulikgenerator / Hydrogenerator	11A10A6,1X181G/101, 6X182G, 1,6+6,1cm^3/rpm	1
4	Zpětný filtr / Filter / Filter	MPF0301AG1 P10NBP01	1
5	Rozvaděč / Verteilungsventil / Distributor	SD2E-A2/S2I11 C13D-02400E1	1
6			
7	Manometr / Manometer / Manometer	Ø68 0-10 MPa	1
8			
9	Hydraulický zámek / HydraulischesSchloß / Hydrauliclock	RJV1-05-0	2
10	Rozváděč / Schaltschrank / Switchboard	RPE3-04Y11/02400E1K1 92.101.005	4(3/2)
11	Rozváděč / Schaltschrank / Switchboard	ROE3-042S2/02400E1K1	1
12	Hydraulický zámek / HydraulischesSchloß / Hydrauliclock	VJR1-04/MC 92.103.003	2(1/0)
13	Nalévací zátka / Stopfen / Fill stopper	L1.0406	1
14	Sací filtr / Filter / Suctionfilter	2SF56/48-0,063 63 um	3
15	Jednosměrný ventil / Einwegventil / One-wayvalve	VJ01-06/SG-1	1
16	Přepouštěcí ventil / Bypaßventil / By passvalve	VPN1-06/S-10S/M 27999700	1
17	Pojistný ventil / Sicherungventil / Safetyvalve	VPNH ¼ 92.151.001	2
18	Redukční ventil / Reduktionventil /	VRN2-06/S-6R 92.154.001	2(1)
19	Manometr / Manometer / Manometer	Ø68, 0–6MPa	3(2)
20	Kostka regulace / Regulationklotz / Regulationcube		1
21	Kulový ventil /Kugelventil / Globe valve	99.260.004	1(0)
22	Tlakový spínač / Druckschalter / Pressureswitch	0166415031059 20–50 bar	2(1)
23	Redukční ventil / Reduktionventil /	VRN2-06/S-6R	1
24	Škrtící ventil / Drosselventil / Throttle-valve	VS01-04/R2,5 92.152.001	2(1)
25	Krycí deska / Schutzplatte / Coverplatte	DK 1-04/32-2	2/3(2/3)
26	Hydraulický zámek / HydraulischesSchloß / Hydrauliclock	VJR1-04/MB 92.103.003	1(0)
27	Rozváděč / Schaltschrank / Switchboard	RPE3-043Z11/02400E1K1 92.101.010	1(0)
28	Jednosměrný ventil / Einwegventil / One-wayvalve	VJ01-04/MP-30 92.104.001	1(0)
29	Redukční ventil / Reduktionventil /	VRP2-04-PS/6,3 92.154.003	2(0)
30	Clona / Schürze / Shield	0,8 92.153.022	1(0)
31	Rozváděč / Schaltschrank / Switchboard	SD2E-A3/S2D26 408-0328.003	1(0)

7. Drawingassembliesforsparepartsorder

- Při objednávání náhradních dílů vždy uvádějte: typ stroje (např. Proline 320.280 ANC) , výrobní číslo (např. 125) a rok výroby (např. 1999).

- In dieBestellung der ErsatzteileführenSieimmeran: Maschinentyp (z. B. Proline 320.280 ANC), SerienNr. (z. B. 125) undBaujahr (z. B. 1999).

- Forsparepartsorder, youmustalways to allege: type ofmachine (forexampleProline 320.280 ANC), serialnumber (forexample 125, seecoverpage) and yearofconstruction (forexample 1999).

7.1. Proline 320.280 ANC- 1

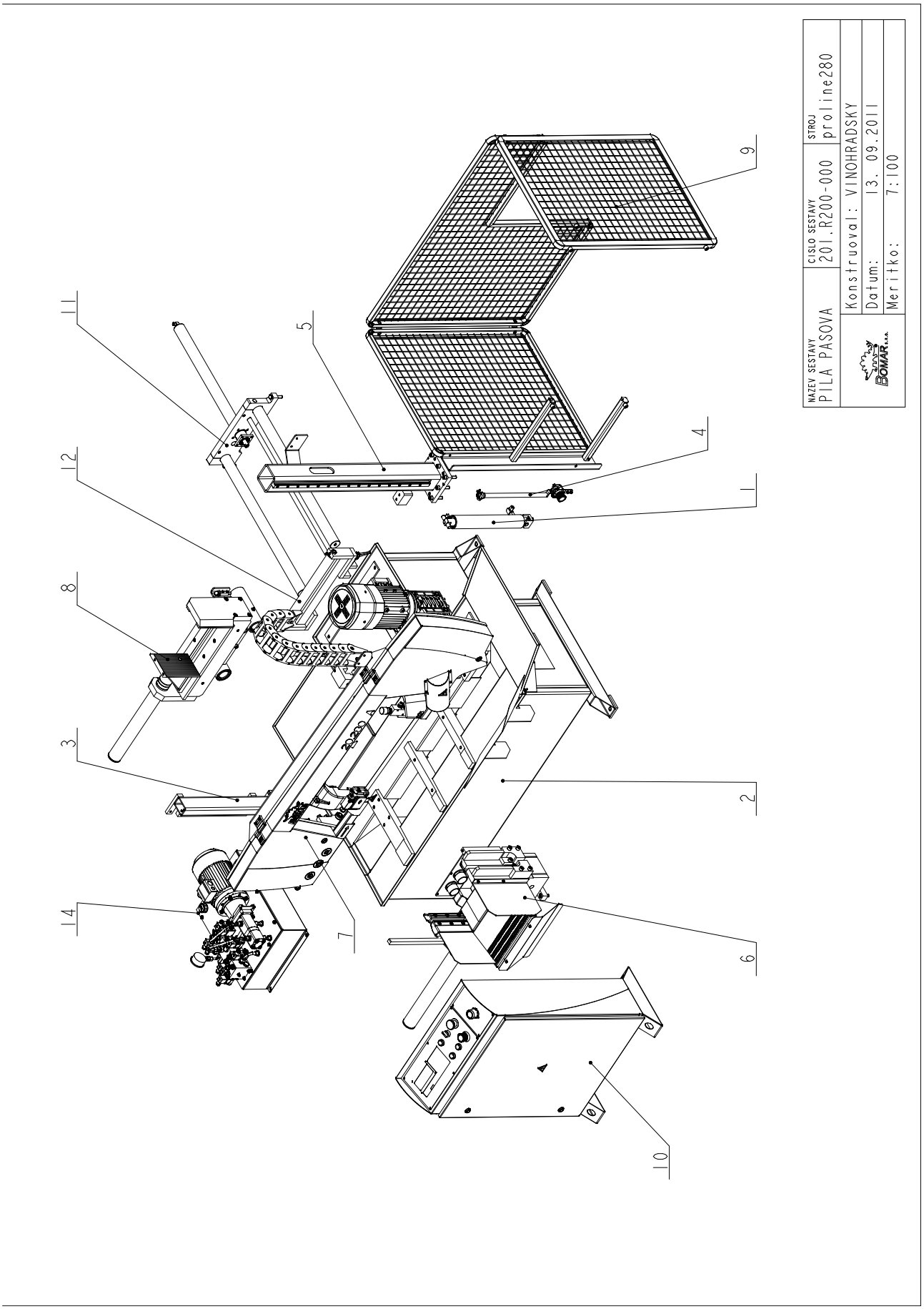

Cislo Sestavy	Ver.	Nazev sestavy
201.R200-000	2	PILA PASOVA/BAND SAW/BANDSÄGE

Poz.	Objednaci cislo	Ver.	Nazev polozky	Rozmer	Ks
1	201.8307-200	2	VALEC ZVEDACI / LIFTING CYLINDER / HEBEZYLINDER		1
2	201.R201-050 (2)	0	PODSTAVEC / BASE / UNTERSATZ		1
3	201.R202-020	0	SLOUP / POLE / SÄULE		1
4	201.R202-030	2	ODMEROVANI / POLE / SÄULE		1
5	201.R202-050 (2)	0	SLOUP / POLE / SÄULE		1
6	201.R203-000	2	SVERAK / VICE / SCHRAUBSTOCK		1
7	201.R204-200 (2)	0	RAMENO / SAW ARM / SAGERAHMEN		1
8	201.R211-000	2	PODAVAC / FEEDER / VORSCHUB		1
9	201.R214-020	1	PLOT / FENCE / ZAUN		1
10	201.R230-300 (1)	0	OVLADACI PANEL / CONTROL PANEL / BEDIENPULT		1
11	201.R311-100	0	CELO / /		1
12	201.R314-250 (1)	0	VALEC POMOCNY / AUXILIARY CYLINDER / HILFSZYLINDER		1
13	30.R299-001 (1)	0	STITEK TYPOVY / MACHINE LABEL / MASCHINE SCHILD	P 0.5x65	1
14	92.001.070	0	AGREGAT HYDRAULICKY / HYDRAULIC GENERATOR / HYDRAULIKAGGREGAT	FMV	1
15	99.900.039	0	SAMOLEPKA / STICKER / AUFKLEBER	NEBEZP.STLACENI	2
16	99.900.040	0	SAMOLEPKA / STICKER / AUFKLEBER		1
17	99.900.047	0	SAMOLEPKA / STICKER / AUFKLEBER		1
18	99.900.048	0	SAMOLEPKA / STICKER / AUFKLEBER		1
19	99.900.049	0	SAMOLEPKA / STICKER / AUFKLEBER		1
20	99.900.053	0	SAMOLEPKA / STICKER / AUFKLEBER		1
21	99.901.042	0	SAMOLEPKA / STICKER / AUFKLEBER		1

1.PRIDAN VALEC POMOCNY 201.R314-250,PRID.STITEK TYPOVY 30.R299-001,ZRUS.OVLADACI PANEL 201.R230-000 A NAHR.201.R230-300. 155,198/ZM207 31.8.2011 SLEZACKOVA

2.ZRUS.PODSTAVEC 201.R201-000 A NAHR.201.R201-050,ZRUS.RAMENO 201.R204-000 A NAHR.201.R204-200,ZRUS.SLOUP 201.R202-010 A NAHR.201.R202-050. 247/ZM310 28.11.2011 SLEZACKOVA

7.3. Proline 320.280 ANC- 2

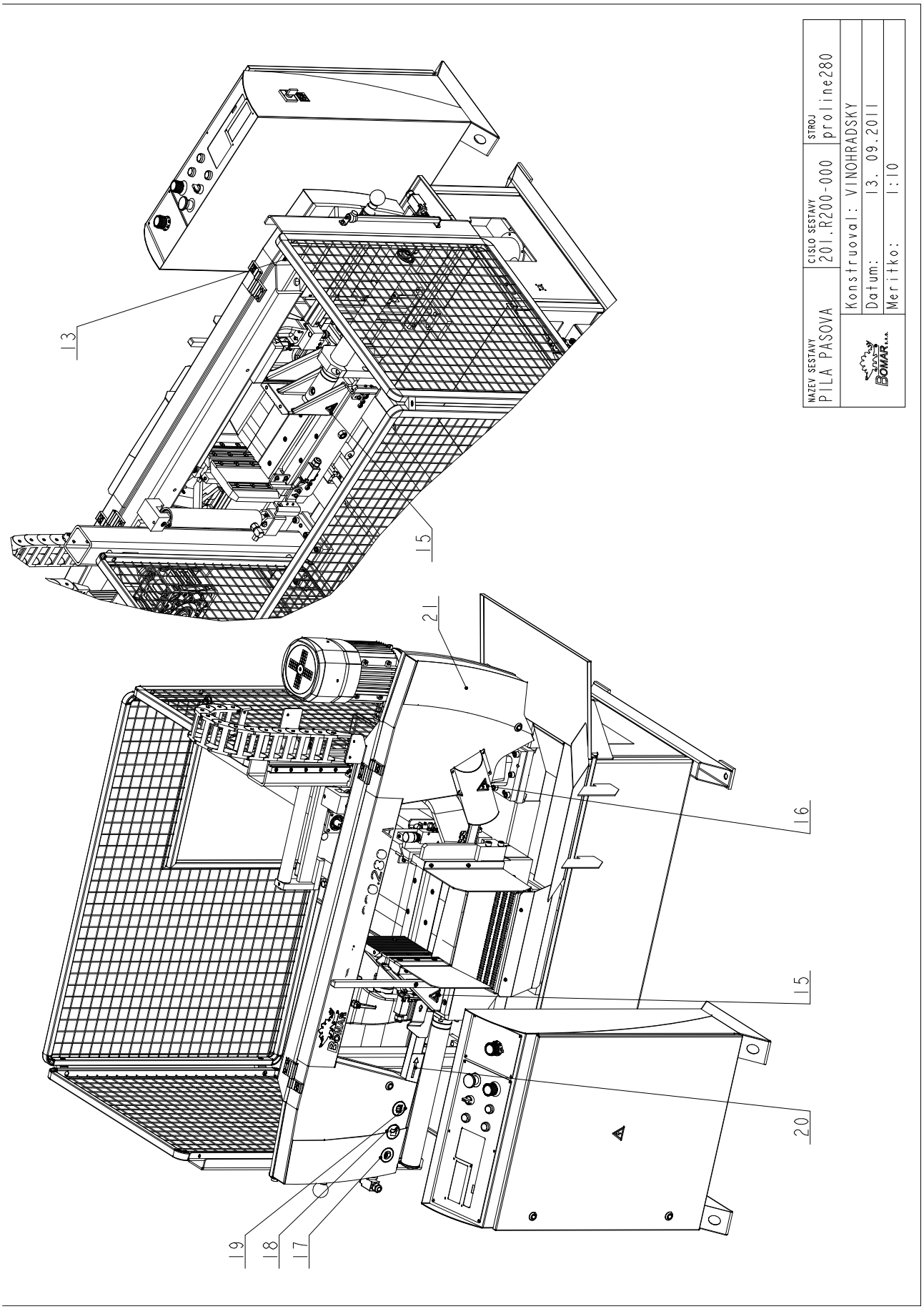

Cislo Sestavy	Ver.	Nazev sestavy
201.R200-000	2	PILA PASOVA/BAND SAW/BANDSÄGE

Poz.	Objednaci cislo	Ver.	Nazev polozky	Rozmer	Ks
1	201.8307-200	2	VALEC ZVEDACI / LIFTING CYLINDER / HEBEZYLINDER		1
2	201.R201-050 (2)	0	PODSTAVEC / BASE / UNTERSATZ		1
3	201.R202-020	0	SLOUP / POLE / SÄULE		1
4	201.R202-030	2	ODMEROVANI / POLE / SÄULE		1
5	201.R202-050 (2)	0	SLOUP / POLE / SÄULE		1
6	201.R203-000	2	SVERAK / VICE / SCHRAUBSTOCK		1
7	201.R204-200 (2)	0	RAMENO / SAW ARM / SAGERAHMEN		1
8	201.R211-000	2	PODAVAC / FEEDER / VORSCHUB		1
9	201.R214-020	1	PLOT / FENCE / ZAUN		1
10	201.R230-300 (1)	0	OVLADACI PANEL / CONTROL PANEL / BEDIENPULT		1
11	201.R311-100	0	CELO / /		1
12	201.R314-250 (1)	0	VALEC POMOCNY / AUXILIARY CYLINDER / HILFSZYLINDER		1
13	30.R299-001 (1)	0	STITEK TYPOVY / MACHINE LABEL / MASCHINE SCHILD	P 0.5x65	1
14	92.001.070	0	AGREGAT HYDRAULICKY / HYDRAULIC GENERATOR / HYDRAULIKAGGREGAT	FMV	1
15	99.900.039	0	SAMOLEPKA / STICKER / AUFKLEBER	NEBEZP.STLACENI	2
16	99.900.040	0	SAMOLEPKA / STICKER / AUFKLEBER		1
17	99.900.047	0	SAMOLEPKA / STICKER / AUFKLEBER		1
18	99.900.048	0	SAMOLEPKA / STICKER / AUFKLEBER		1
19	99.900.049	0	SAMOLEPKA / STICKER / AUFKLEBER		1
20	99.900.053	0	SAMOLEPKA / STICKER / AUFKLEBER		1
21	99.901.042	0	SAMOLEPKA / STICKER / AUFKLEBER		1

1.PRIDAN VALEC POMOCNY 201.R314-250,PRID.STITEK TYPOVY 30.R299-001,ZRUS.OVLADACI PANEL 201.R230-000 A NAHR.201.R230-300. 155,198/ZM207 31.8.2011 SLEZACKOVA

2.ZRUS.PODSTAVEC 201.R201-000 A NAHR.201.R201-050,ZRUS.RAMENO 201.R204-000 A NAHR.201.R204-200,ZRUS.SLOUP 201.R202-010 A NAHR.201.R202-050. 247/ZM310 28.11.2011 SLEZACKOVA

7.5. Rameno / Sägerahmen / Sawarm1

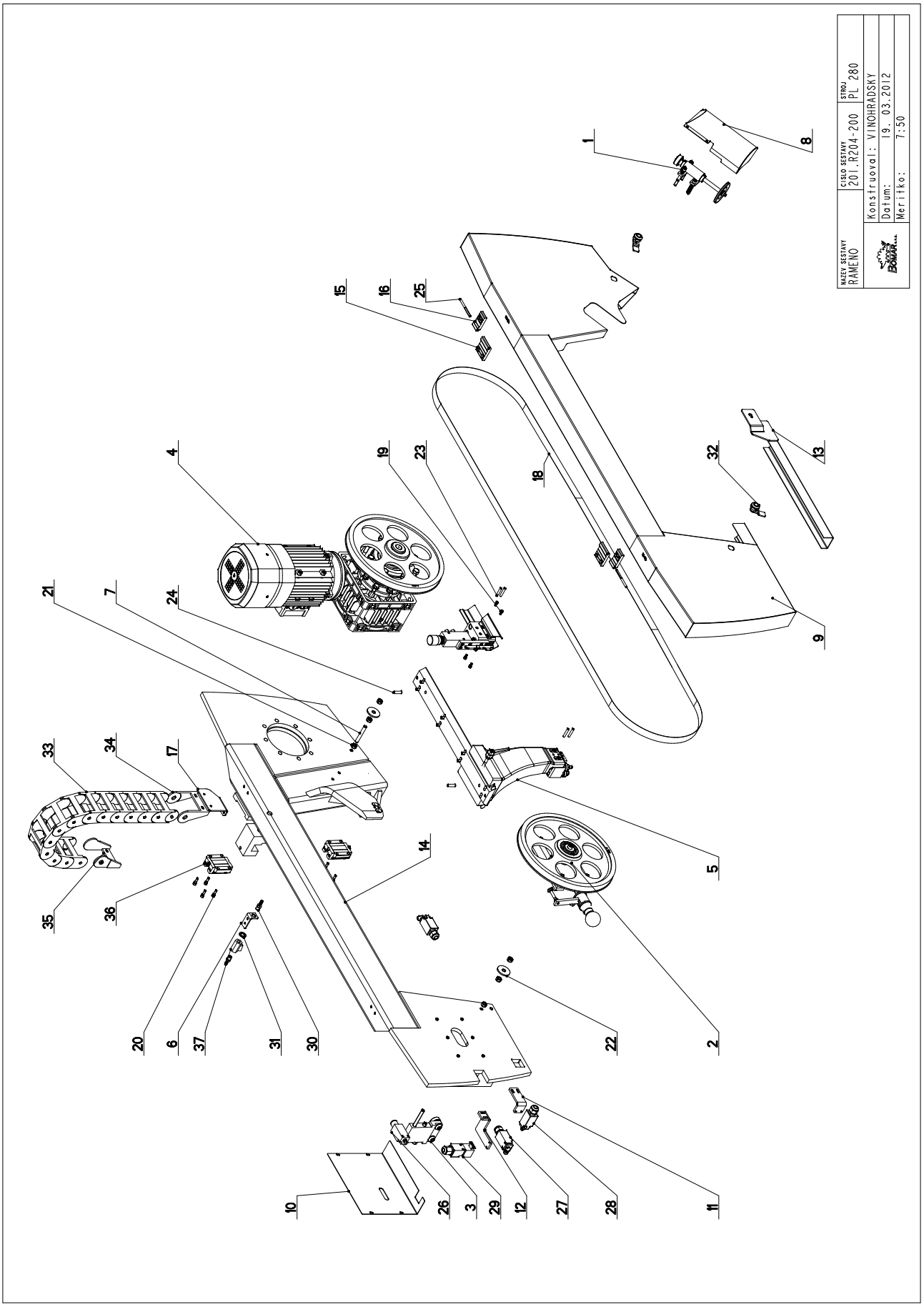

7.6. Kusovník / Stückliste / Piece list – Rameno / Sägerahmen / Sawarm 1

Cislo Sestavy	Ver.	Nazev sestavy
201.R204-200	1	RAMENO/SAW ARM/SAGERAHMEN

Poz.	Objednaci cislo	Ver.	Nazev polozky	Rozmer	Ks
1	201.8114-630	0	KARTAC / BRUSH / BURSTE		1
2	201.M208-000	0	NAPINANI / TENSIONING / SPANNUNG		1
3	201.R204-030	0	KONZOLA / CONSOLE / KONSOLE		1
4	201.R205-100	0	PREVODOVKA / TRANSMISSION / GETRIEBE		1
5	201.R210-000	1	VEDENI PASU / BELT GUIDE / SÄGEBANDFÜHRUNG		1
6	30.1814-011	1	DRZAK / HOLDER / HALTER	P 3x76	1
7	30.3404-056	0	TYC ZAVITOVA / THREADED POLE / GEWINDESTANGE	M10	1
8	30.M204-009	0	KRYT KARTACKU / BRUSH COVER / BÜRSTENABDECKUNG		1
9	30.M204-011	1	KRYT / COVER / ABDECKUNG		1
10	30.M204-012	0	KRYT NAPINANI / TENSIONING COVER / BANDSPANNUNGSABDECKUNG	P 1.5x280	1
11	30.r204-004	0	DRZAK / HOLDER / HALTER	P6x34	1
12	30.R204-006	0	DRZAK / HOLDER / HALTER	P 6x95	1
13	30.R204-016	0	KRYT PASU / BELT COVER / BANDABDECKUNG		1
14	30.R204-201	1	RAMENO / /		1
15	30.R304-006	2	PANT / BOARD / PLATTE	PROFIL	2
16	30.R304-007	1	PANT / BOARD / PLATTE	PROFIL	2
17	30.T304-014	0	DRZAK / HOLDER / HALTER	P 4-100	1
18	44.103.002	0	PAS PILOVY 260 / SAW BELT / SÄGEBAND	3800x25(7)x0.90	1
19	90.001.25.007	0	SROUB IMBUS / ALLEN HEAD BOLT / IMBUSSCHRAUBE	M5X10	4
20	90.001.25.018	0	SROUB IMBUS / ALLEN HEAD BOLT / IMBUSSCHRAUBE	M6X20	8
21	90.100.55.006	0	MATICE / NUT / MUTTER	MATICE _ M10	6
22	90.151.50.002	0	PODLOZKA / WASHER / UNTERLEGSCHEIBE	PODLOZKA 12	2
23	90.302.0Z.001	0	KUZEL. KOLIK S ZAV. / TAPER PIN + THREAD / KEGELBOLZEN + GEWINDE	KOLIK 6X36	4
24	90.302.0Z.002	0	KUZEL. KOLIK S ZAV. / TAPER PIN + THREAD / KEGELBOLZEN + GEWINDE	KOLIK 8X30	2
25	90.307.0Z.001	0	KOLIK / PIN / BOLZEN	D6	2
26	91.173.007	0	SPINAC KONCOVY / END SWITCH / ENDSCHALTER	-RIWK	1
27	91.173.009	0	SPINAC KONCOVY / END SWITCH / ENDSCHALTER		2
28	91.173.010	0	SPINAC KONC.S KLADK. / END SWITCH WITH PULLEY / ENDSCHALTER MIT ROLLE	FR 615 (PIZZATO)	1
29	91.173.012	0	SPINAC KONCOVY / END SWITCH / ENDSCHALTER		1
30	94.202.002	0	REDUKCE / REDUCTION / ADAPTOR / REDUKTION	REDUKCE 6/R1/4"	2
31	96.081.001	0	KROUZEK TESNICI / SEAL RING / DICHTUNGSRING	23x15x3	1
32	99.104.002	0	ZAMEK / LOCK / SCHLOSS	ZAMEK CINSKY	2
33	99.170.001	0	RETEZ ENERGII / ENERGY BELT / ENERGIEKETTE	0555.030.075.100	13

Cislo Sestavy/Number of assembly/Nummer der Baugruppe; Verze (Ver.)/Version/Version; Nazev sestavy/Assembly title/Name der Baugruppe; Pozice (Poz.)/Position/Position; Objednaci cislo/Purchase order number/Bestellnummer; Nazev polozky/Volume title/Name der Position; Rozmer/Stock size/Abmessung

7.7. Rameno / Sägerahmen / Sawarm 2

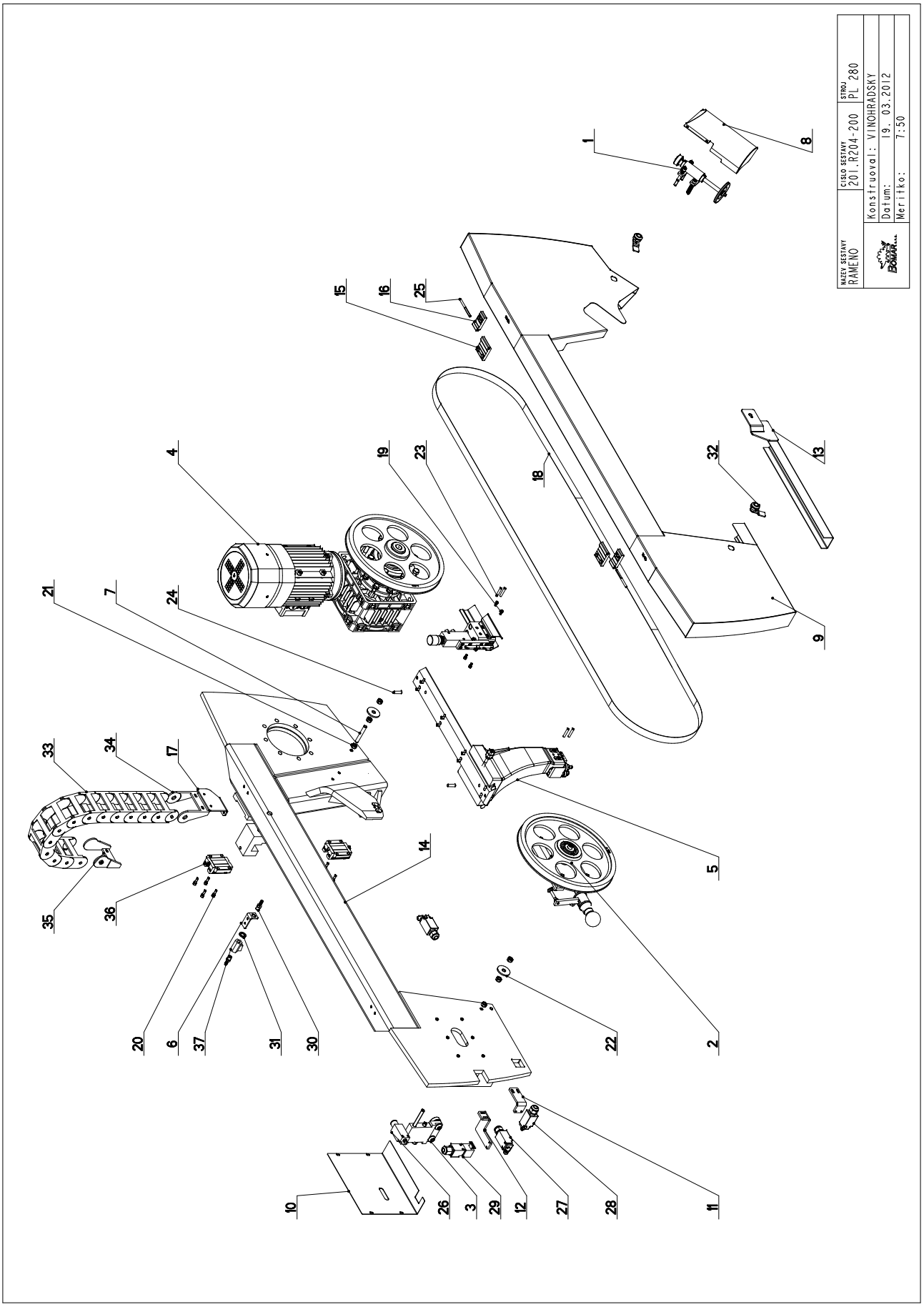

7.8. Kusovník / Stückliste / Piece list – Rameno / Sägerahmen / Sawarm 2

34	99.173.001	0	RETEZ ENERGII / ENERGY BELT / ENERGIEKETTE	KONCOVKA VNEJ	1
35	99.173.002	0	RETEZ ENERGII / ENERGY BELT / ENERGIEKETTE	KONCOVKA VNIT	1
36	99.201.046 (1)	0	VEDENI LINEARNI / LINEAR GUIDE / LINEARE FÜHRUNG	MSA25E SS F0 N	2
37	99.260.003	0	VENTIL / VALVE / VENTIL	1/4"	1

1.ZRUS.LIN.VOZIK 99.201.008 A NAHR. 99.201.046 . 056/ZM097 16.3.2012 SLEZACKOVA

Cislo Sestavy/Number of assembly/Nummer der Baugruppe; Verze (Ver.)/Version/Version; Nazev sestavy/Assembly title/Name der Baugruppe; Pozice (Poz.)/Position/Position; Objednaci cislo/Purchase order number/Bestellnummer; Nazev polozky/Volume title/Name der Position; Rozmer/Stock size/Abmessung

7.9. Napínání / Spannung / Tensioning

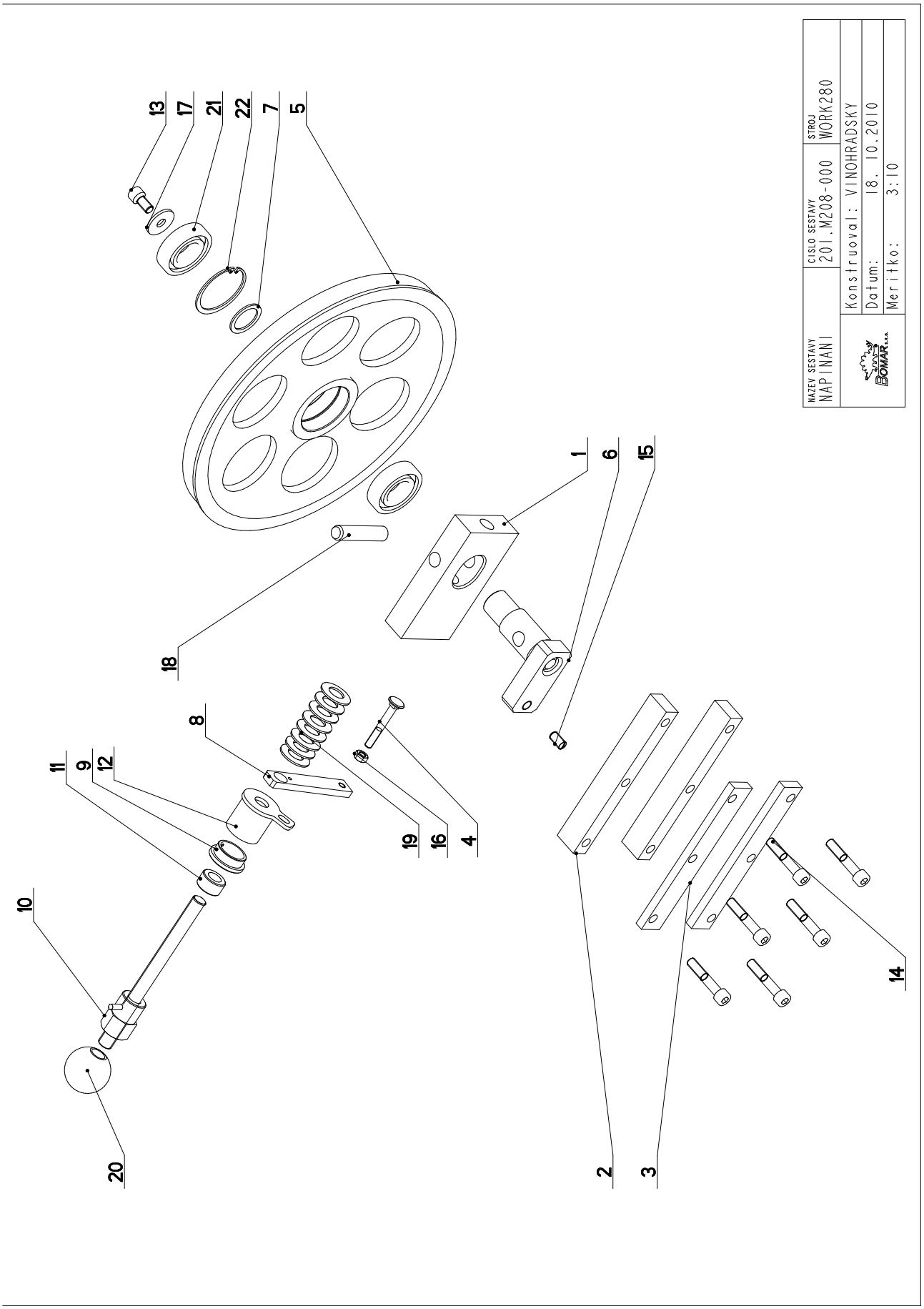

7.10. Kusovník / Stückliste / Piece list – Napínání / Spannung / Tensioning

Cislo Sestavy	Ver.	Nazev sestavy
201.M208-000	0	NAPINANI/TENSIONING/SPANNUNG

Poz.	Objednaci cislo	Ver.	Nazev polozky	Rozmer	Ks
1	30.0808-001	1	KOSTKA NAPINANI / TENSIONING CUBE / BANDSPANNUNGSWÜRFEL	80x30	1
2	30.0808-002	1	LISTA VODICI / LEAD TRIM / FÜHRUNGSLEISTE	30x20	2
3	30.0808-006	1	LISTA / TRIM / LEISTE	HR 30x10	2
4	30.0808-007	0	SROUB / BOLT / SCHRAUBE	M8x60	1
5	30.1708-001	1	KOLO / WHEEL / UMLENKRAD	ODLITEK	1
6	30.1708-002	1	CEP NAPINANI / TENSIONING LUG / SPANNUNGSBOLZEN		1
7	30.1708-003	0	PODLOZKA / WASHER / UNTERLEGSCHEIBE	d 40	1
8	30.1708-004	3	DRZAK / HOLDER / HALTER	HR 20x8	1
9	30.3508-004	0	KROUZEK / RING / RING	d42	1
10	30.4108-001	1	SROUB / BOLT / SCHRAUBE		1
11	30.4108-002	0	DISTANC / DISTANCE / DISTANZ	TR 28x6	1
12	30.6908-102	1	DRZAK / HOLDER / HALTER		1
13	90.001.25.046	0	SROUB IMBUS / ALLEN HEAD BOLT / IMBUSSCHRAUBE	M10X20	1
14	90.001.25.053	0	SROUB IMBUS / ALLEN HEAD BOLT / IMBUSSCHRAUBE	M10X55	6
15	90.002.2D.015	0	SROUB STAVECI / ADJUSTMENT BOLT / STELLSCHRAUBE	SROUB M10X20	1
16	90.100.55.005	0	MATICE / NUT / MUTTER	MATICE _ M8	1
17	90.151.50.001	0	PODLOZKA / WASHER / UNTERLEGSCHEIBE	PODLOZKA 10	1
18	90.300.0Z.003	0	KOLIK VALCOVY KALENY / CYLINDRICAL PIN TEMPERED / ZYLINDERSTIFT GEHÄRTET	KOLIK 16X80	1
19	90.350.0Z.002	0	TALIROVA PRUZINA / DISC SPRING / TELLERFEDER	35,5X18,3X2,0X2,8	8
20	94.001.005	0	RUKOJET / HANDLE / GRIFF	M16	1
21	95.001.019	0	LOZISKO / BEARING / LAGER	6206 2RS	2
22	95.801.010	0	KROUZEK POJIST.VNITR / INSIDE SAFETY RING / SICHERUNGSRING INNEN	POJISTNY KROUZEK 62	1

Poz. - Pozice/Position/Position; Cislo vykresu/Drawing number/Zeichnungsnummer

7.11. Vedení pásu / Sägebandführung / Beltguide

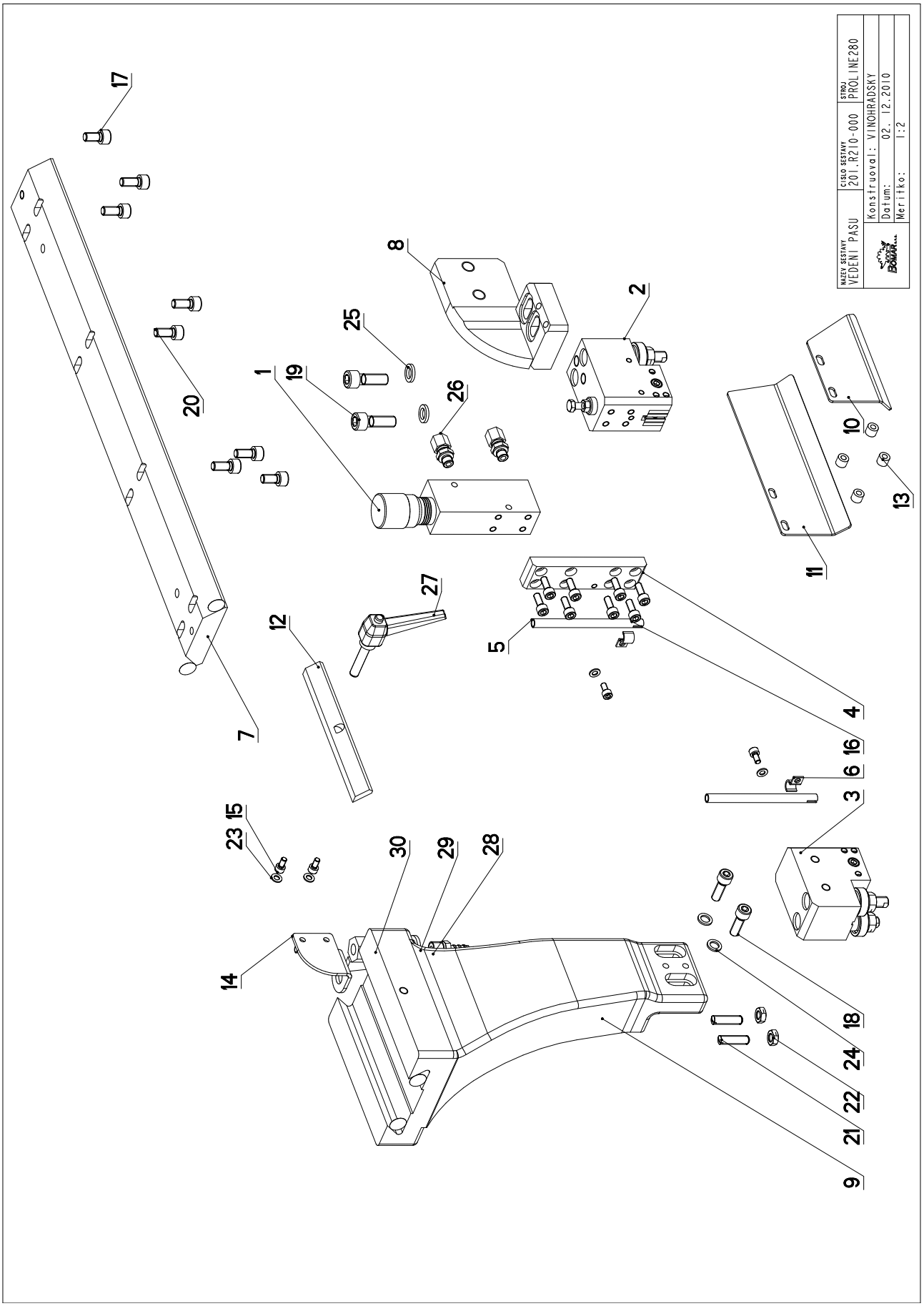

7.12. Kusovník / Stückliste / Piece list – Vedení pásu / Sägebandführung / Beltguide

Cislo Sestavy	Ver.	Nazev sestavy
201.R210-000	0	VEDENI PASU/BELT GUIDE/SÄGEBANDFÜHRUNG

Poz.	Objednaci cislo	Ver.	Nazev polozky	Rozmer	Ks
1	251.077	0	REGULACE PRITLAKU / PRESSURE REGULATION / SCHNITTDRUCKREGULATION		1
2	201.M210-110	0	KOSTKA VODICI / LEAD CUBE / FÜHRUNGSKLOTZ		1
3	201.M210-200	0	KOSTKA VODICI / /		1
4	30.3510-003	0	DESKA / BOARD / PLATTE	HR 30x12	1
5	30.3510-004	0	TRUBKA / TUBE / ROHR	TR 8x 1	2
6	30.9010-003	0	DRZAK / HOLDER / HALTER	P1.5x10	2
7	30.M210-002	0	LISTA / TRIM / LEISTE	HR 80x20	1
8	30.M210-003	0	KONZOLA / /		1
9	30.M210-004	0	KONZOLA / CONSOLE / KONSOLE		1
10	30.M210-006	0	KRYT PASU / BELT COVER / BANDABDECKUNG	P 2x70	1
11	30.M210-007		KRYT PASU / BELT COVER / BANDABDECKUNG	P 2x70	1
12	30.M210-008	0	LISTA / TRIM / LEISTE	HR 25x6	1
13	30.Y310-007	0	KROUZEK / RING / RING	TR 10x2,5	4
14	30.Y310-008		DRZAK / HOLDER / HALTER	P3-50	1
15	90.001.25.007	0	SROUB IMBUS CERNENY / ALLEN HEAD BOLT / IMBUSSCHRAUBE	M5X10	4
16	90.001.25.017	0	SROUB IMBUS CERNENY / ALLEN HEAD BOLT / IMBUSSCHRAUBE	M6X16	8
17	90.001.25.031	0	SROUB IMBUS CERNENY / ALLEN HEAD BOLT / IMBUSSCHRAUBE	8x16	2
18	90.001.25.033	0	SROUB IMBUS CERNENY / ALLEN HEAD BOLT / IMBUSSCHRAUBE	8x25	2
19	90.001.25.048	0	SROUB IMBUS / ALLEN HEAD BOLT / IMBUSSCHRAUBE	M10X30	2
20	90.001.25.105	0	SROUB IMBUS / ALLEN HEAD BOLT / IMBUSSCHRAUBE	M8X18	6
21	90.002.2D.022	0	SROUB STAVECI / ADJUSTMENT BOLT / STELLSCHRAUBE	SROUB M8X30	2
22	90.101.55.001	0	MATICE / NUT / MUTTER	MATICE M8	2
23	90.150.50.003	0	PODLOZKA / WASHER / UNTERLEGSCHEIBE	PODLOZKA 5,3	4
24	90.163.00.002		PODLOZKA / WASHER / UNTERLEGSCHEIBE	PODLOZKA 8	2
25	90.163.00.004	0	PODLOZKA / WASHER / UNTERLEGSCHEIBE	NORD-LOCK	2
26	92.002.102	0	SROUBENI / BOLTING / VERSCHRAUBUNG	S-GEV-8LLR	2
27	94.008.003	0	PAKA UPINACI / ATTACHMENT LEVER / SPANNHEBEL	M8x40	1
28	94.202.002	0	REDUKCE / REDUCTION / ADAPTOR / REDUKTION	REDUKCE 6/R1/4"	2
29	96.081.001	0	KROUZEK TESNICI / SEAL RING / DICHTUNGSRING	23x15x3	1
30	99.260.003	0	VENTIL / VALVE / VENTIL	1/4"	1

Poz. - Pozice/Position/Position; Cislo vykresu/Drawing number/Zeichnungsnummer

7.13. Vodící kostka / Führungsklotz / Guidingcube1

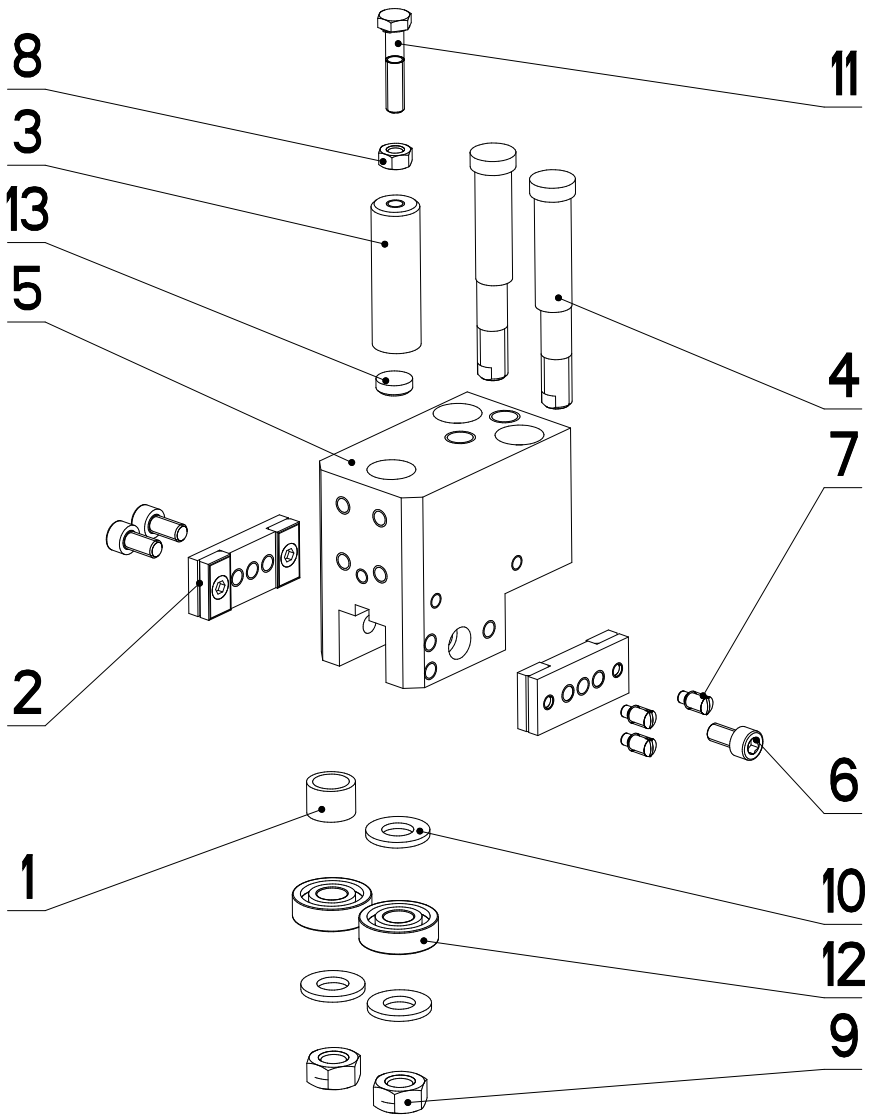

NAZEV SESTAVY	CISLO SESTAVY	STROJ
KOSTKA VODICI	201.M210-110	work280H

BOMAR s.r.o.	Konstruoval: VINOHRADSKY
	Datum: 02. 12.2010
	Meritko: 1:2

7.14. Kusovník / Stückliste / Piece list – Vodící kostka / Führungsklotz / Guidingcube1

Cislo Sestavy	Ver.	Nazev sestavy
201.M210-110	0	KOSTKA VODICI/LEAD CUBE/FÜHRUNGSKLOTZ

Poz.	Objednaci cislo	Ver.	Nazev polozky	Rozmer	Ks
1	30.1710.006	0	KROUZEK DISTANCNI / DISTANCE RING / DISTANZRING	TR 16x2	1
2	30.1710-015	0	DESKA / BOARD / PLATTE		2
3	30.3510-002	1	DRZAK TVRDOKOVU / POA HOLDER / HM-HALTER	TYC 16	1
4	30.M210-102	0	EXCENTR / CAM / EXZENTER	d 15	2
5	30.M210-111	0	KOSTKA VODICI / LEAD CUBE / FÜHRUNGSKLOTZ	TYC 80x50	1
6	90.001.25.016	0	SROUB IMBUS / ALLEN HEAD BOLT / IMBUSSCHRAUBE	M6X12	3
7	90.004.2D.002	0	SROUB STAVECI / ADJUSTMENT BOLT / STELLSCHRAUBE	SROUB M6X12	3
8	90.100.55.004	0	MATICE / NUT / MUTTER	MATICE _ M6	1
9	90.100.55.006	0	MATICE / NUT / MUTTER	MATICE _ M10	2
10	90.150.50.006	0	PODLOZKA / WASHER / UNTERLEGSCHEIBE	PODLOZKA 10,5	3
11	90.401.0Z.002		SROUB 6HRANNY / 6 SIDED BOLT / SECHSKANTSCHRAUBE	SROUB M6X30	1
12	95.001.004	0	LOZISKO / BEARING / LAGER	6000 2RS	2
13	99.040.002	0	TVRDOKOV / HARD METAL / HM-SEGMENT	d 12	1

7.15. Vodící kostka / Führungsklotz / Guidingcube2

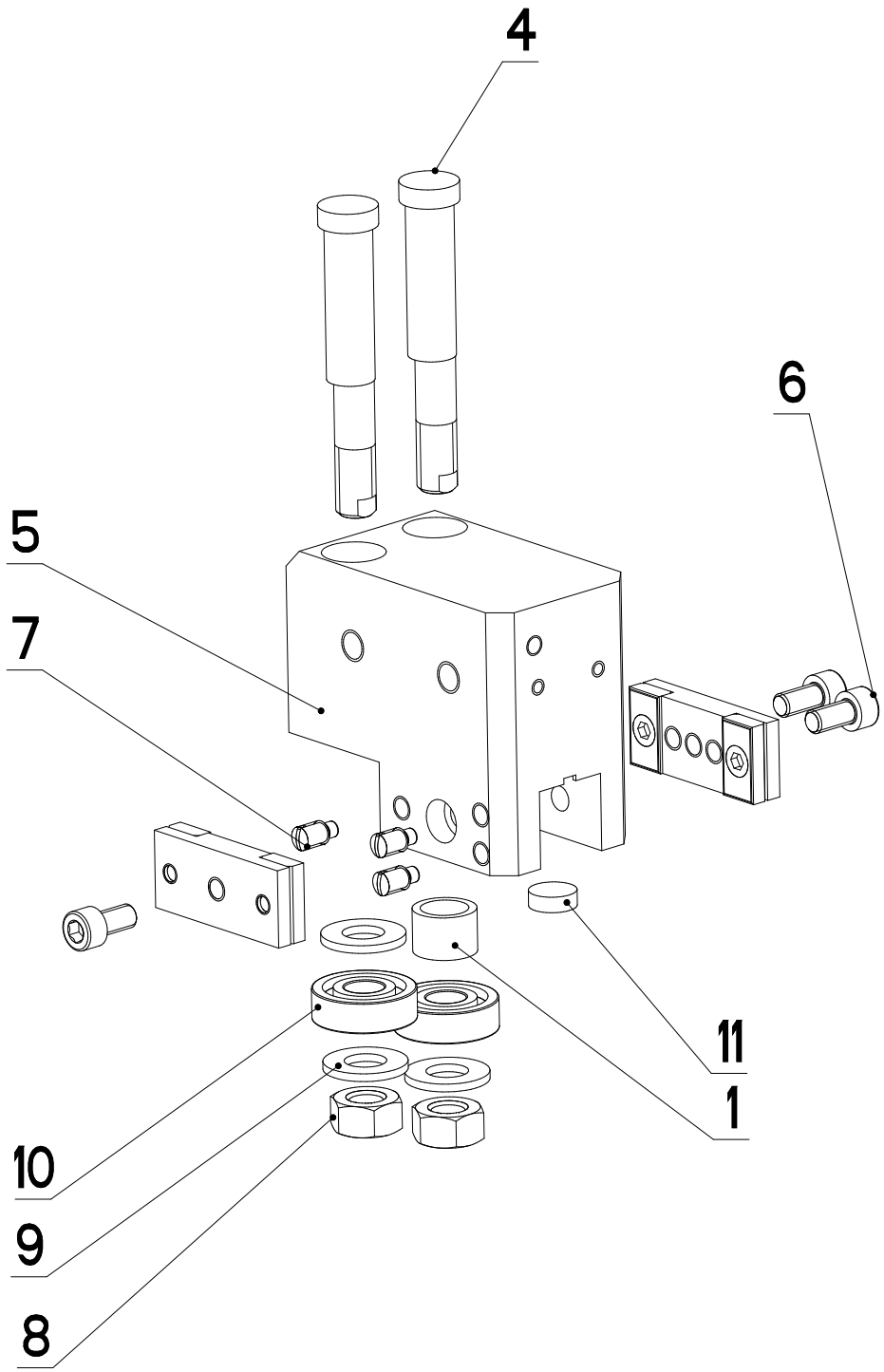

NAZEV SESTAVY	CISLO SESTAVY	STROJ
KOSTKA VODICI	201.M210-200	WORK280

BOMAR s.r.o.	Konstruoval: &konstruoval
	Datum: 18. 10.2010
	Meritko: 7:10

7.16. Kusovník / Stückliste / Piece list – Vodící kostka / Führungsklotz / Guidingcube2

Cislo Sestavy	Ver.	Nazev sestavy
201.M210-200	0	KOSTKA VODICI/&NAZEV_EN/&NAZEV_DE

Poz.	Objednaci cislo	Ver.	Nazev polozky	Rozmer	Ks
1	30.1710.006	0	KROUZEK DISTANCNI / DISTANCE RING / DISTANZRING	TR 16x2	1
2	30.1710-010	0	DESKA / BOARD / PLATTE		1
3	30.1710-015	0	DESKA / BOARD / PLATTE		1
4	30.M210-102	0	EXCENTR / CAM / EXZENTER	d 15	2
5	30.M210-201	0	KOSTKA VODICI / LEAD CUBE / FÜHRUNGSKLOTZ	HR 80x50	1
6	90.001.25.016	0	SROUB IMBUS / ALLEN HEAD BOLT / IMBUSSCHRAUBE	M6X12	3
7	90.004.2D.002	0	SROUB STAVECI / ADJUSTMENT BOLT / STELLSCHRAUBE	SROUB M6X12	3
8	90.100.55.006	0	MATICE / NUT / MUTTER	MATICE _ M10	2
9	90.150.50.006	0	PODLOZKA / WASHER / UNTERLEGSCHEIBE	PODLOZKA 10,5	3
10	95.001.004	0	LOZISKO / BEARING / LAGER	6000 2RS	2
11	99.040.002	0	TVRDOKOV / HARD METAL / HM-SEGMENT	12x4	1

Poz. - Pozice/Position/Position; Cislo vykresu/Drawing number/Zeichnungsnummer

7.17. Pohon / Antrieb / Drive

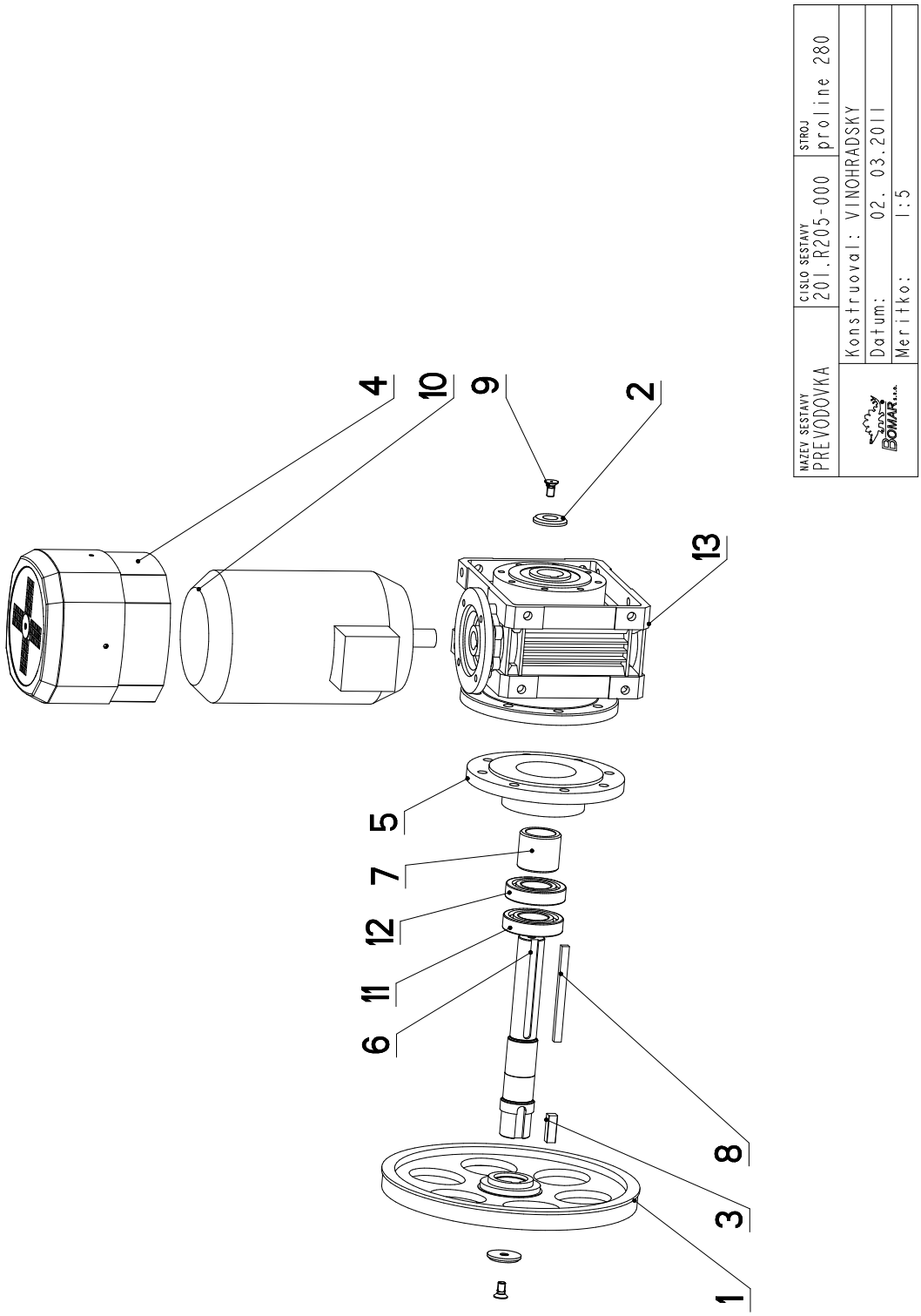

7.18. Kusovník / Stückliste / Piece list – Pohon / Antrieb / Drive

Cislo Sestavy	Ver.	Nazev sestavy
201.R205-000	0	PREVODOVKA/TRANSMISSION /GETRIEBE

Poz.	Objednaci cislo	Ver.	Nazev polozky	Rozmer	Ks
1	30.1704-005	3	KOLO HNACI / DRIVE WHEEL / ANTRIEBSRAD	ODLITEK	1
2	30.1704-008	0	PODLOZKA / WASHER / UNTERLEGSCHEIBE	d 45	2
3	30.1704-012	0	PERO / SPRING / FEDER	#12x12	1
4	30.3404-060	0	VENTILATOR / VENTILATOR / VENTILATOR		1
5	30.R205-002	0	PRIRUBA / FLANGE / FLANSCHE	d 220	1
6	30.R205-003	0	HRIDEL / SHAFT / WELLE	d 45	1
7	30.R205-004	0	KROUZEK DISTANCNI / DISTANCE RING / DISTANZRING	TR 55x8	1
8	30.R205-006	0	PERO / SPRING / FEDER	HR 10x8	1
9	90.011.27.008	0	SROUB ZAPUSTNY / COUNTERSINK BOLT / SENKSCHRAUBE	SROUB M10X20	2
10	91.001.044		ELEKTROMOTOR / /	TM90-4X B14, 2,2kW	1
11	95.001.021	0	LOZISKO / BEARING / LAGER	6208 2RS	1
12	95.200.001	0	LOZISKO / BEARING / LAGER	VALECKOVA L. IRADA	1
13	99.001.125		PREVODOVKA SNEKOVA / WORM GEAR TRANSMISSION / SCHNECKENGETRIEBE	CH08	1

7.19. Svěrák / Schraubstock / Vice

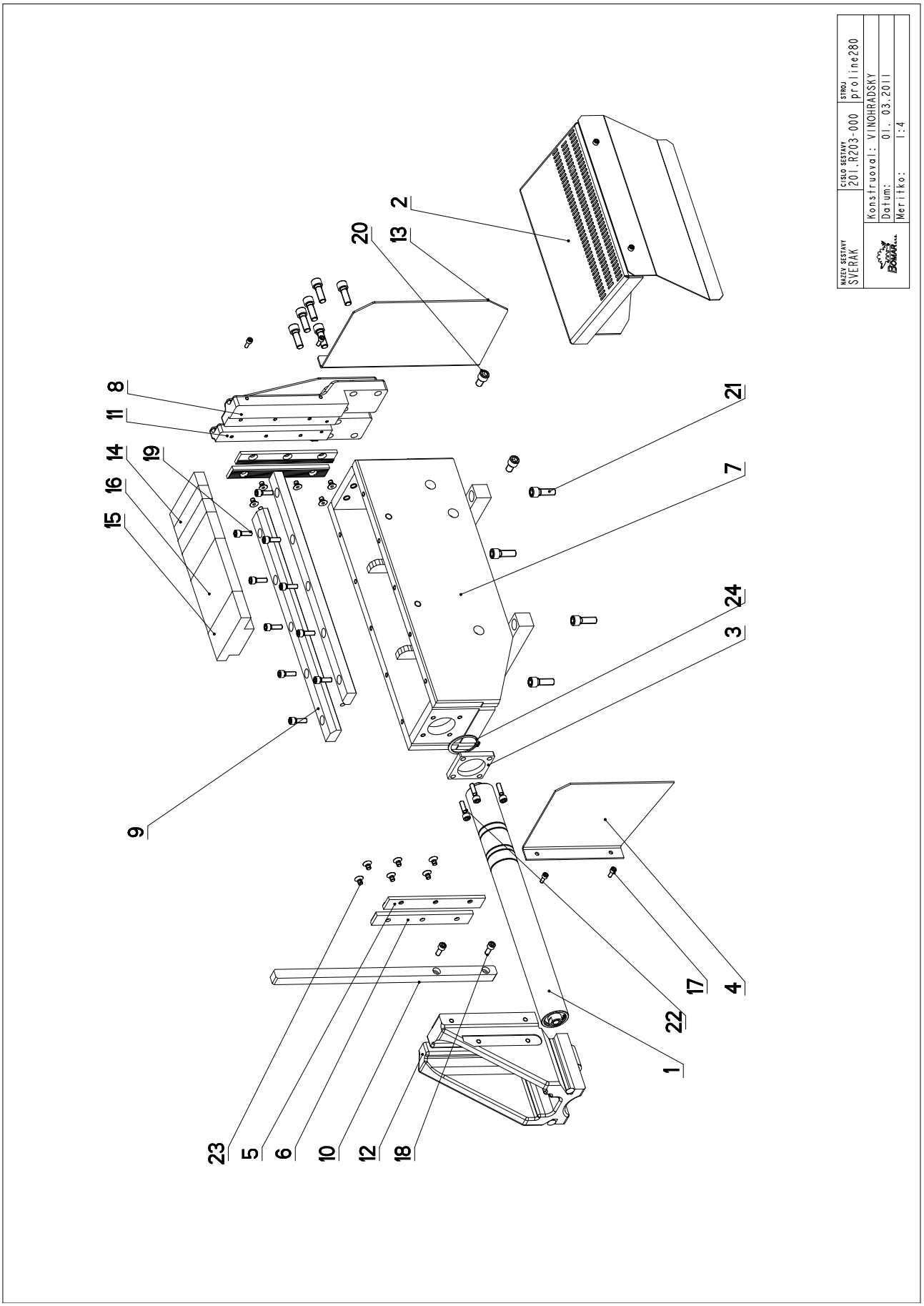

7.20. Kusovník / Stückliste / Piece list – Svěrák / Schraubstock / Vice

Cislo Sestavy	Ver.	Nazev sestavy
201.R203-000	0	SVERAK/VICE/SCHRAUBSTOCK

Poz.	Objednaci cislo	Ver.	Nazev polozky	Rozmer	Ks
1	201.3507-000	1	VALEC / ROLLER / ZYLINDER		1
2	201.R203-050		SKLUZ / SLIDE / RUTSCH		1
3	30.3511-009	0	PRILOZKA / STRAP / LASCHE	HR 70x10	1
4	30.5503-015	0	BOCNICE / SIDE PLATE / SEITENTEIL	P 3-233	1
5	30.6903-109	0	LISTA CELISTI / JAW TRIM / BACKENLEISTE	HR 30x10	2
6	30.6903-110	1	LISTA CELISTI / JAW TRIM / BACKENLEISTE	HR 30x10	2
7	30.R203-001	0	SVERAK / VICE / SCHRAUBSTOCK		1
8	30.R203-002	0	CELIST / JAW / BACKE	ODLITEK	1
9	30.R203-004	0	VEDENI / GUIDE / BACKENFÜHRUNG	HR 40x25	2
10	30.R203-005	0	LISTA / TRIM / LEISTE	HR 20x20	1
11	30.R203-012	0	CELIST / JAW / BACKE	ODLITEK	1
12	30.R303-014		CELIST POHYBLIVA / MOVING JAW / BEWEGLICHE BACKE	ODLITEK	1
13	30.R303-015	0	BOCNICE / SIDE PLATE / SEITENTEIL	P 3x226	1
14	30.R303-016	0	VLOZKA / INSERT / EINLAGE	tyc40x30	3
15	30.R303-017	0	VLOZKA / INSERT / EINLAGE	TYC 60x40	2
16	30.R303-018		VLOZKA / INSERT / EINLAGE	HR 120x40	1
17	90.001.25.017	0	SROUB IMBUS CERNENY / ALLEN HEAD BOLT / IMBUSSCHRAUBE	M6X16	4
18	90.001.25.032	0	SROUB IMBUS CERNENY / ALLEN HEAD BOLT / IMBUSSCHRAUBE	8x20	2
19	90.001.25.033	0	SROUB IMBUS CERNENY / ALLEN HEAD BOLT / IMBUSSCHRAUBE	8x25	10
20	90.001.25.056	0	SROUB IMBUS CERNENY / ALLEN HEAD BOLT / IMBUSSCHRAUBE	M12x20	2
21	90.001.25.059	0	SROUB IMBUS / ALLEN HEAD BOLT / IMBUSSCHRAUBE	M12X35	10
22	90.001.55.083	0	SROUB IMBUS / ALLEN HEAD BOLT / IMBUSSCHRAUBE	M8X30	4
23	90.011.27.007		SROUB / /	M8x12	12
24	95.800.019	0	KROUZEK POJIST.VNEJS / OUTSIDE SAFETY RING / SICHERUNGSRING AUßEN	POJISTNY KROUZEK 52	1

7.21. Podavač / Vorschub / Feeder

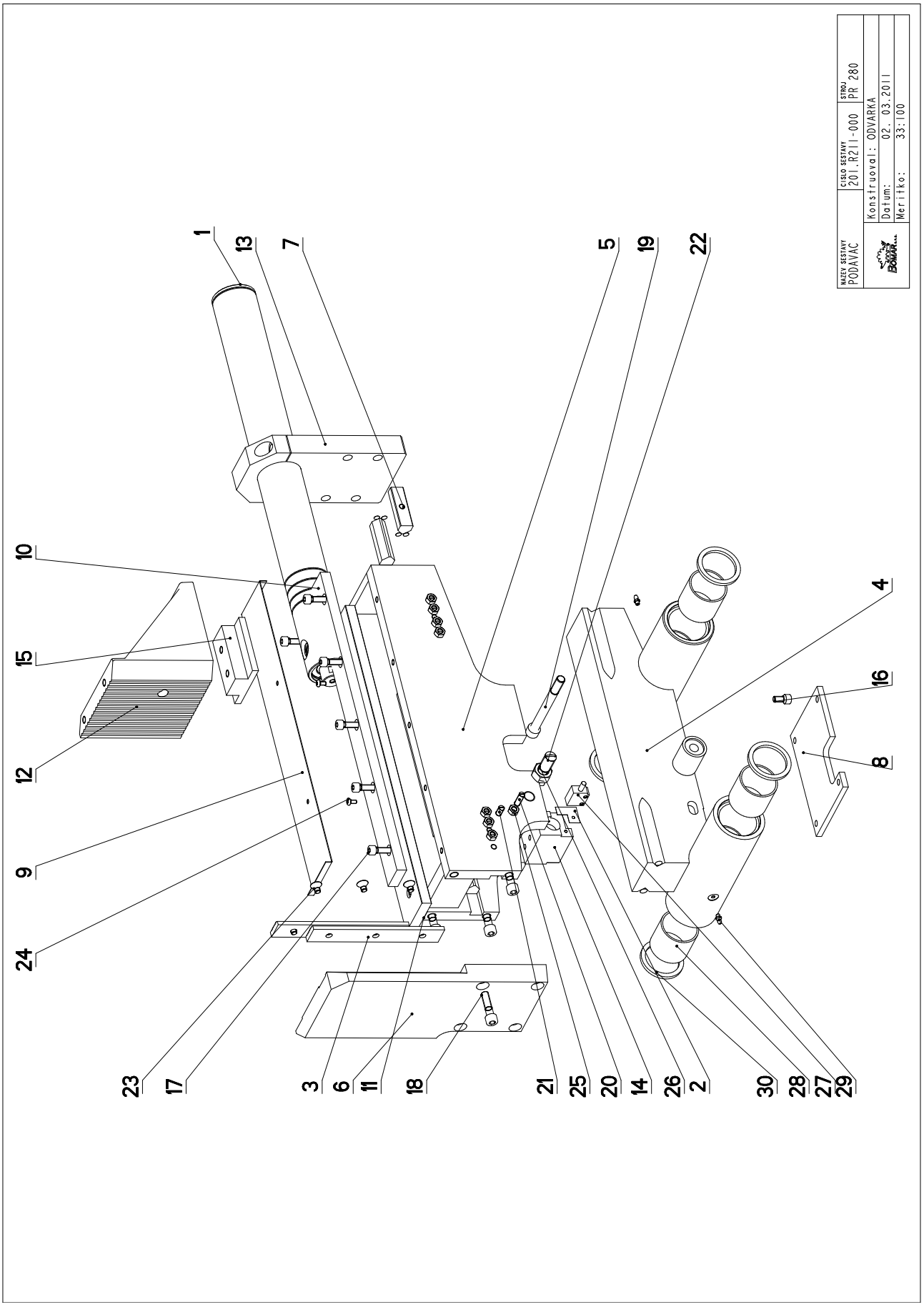

7.22. Kusovník / Stückliste / Piece list – Podavač / Vorschub / Feeder

Cislo Sestavy	Ver.	Nazev sestavy
201.R211-000	0	PODAVAC/FEEDER/VORSCHUB

Poz.	Objednaci cislo	Ver.	Nazev polozky	Rozmer	Ks
1	201.3707-000	1	VALEC / ROLLER / ZYLINDER		1
2	30.2911-030	0	STERAC / WIPER / ABSTREIFER	P 0.2-26.5	2
3	30.6903-110	1	LISTA CELISTI / JAW TRIM / BACKENLEISTE	HR 30x10	2
4	30.R211-001	0	PODAVAC / FEEDER / VORSCHUB		1
5	30.R211-002	0	PODAVAC / FEEDER / VORSCHUB		1
6	30.R211-003	0	CELIST / BOARD / PLATTE	P30x160	1
7	30.R211-004	0	VEDENI / GUIDE / BACKENFŪHRUNG	TYC 20x20	4
8	30.R211-006	0	DESKA / BOARD / PLATTE	HR 120x8	1
9	30.R211-007	0	KRYTY / COVERS / ABDECKUNGEN	P 1x80	1
10	30.R211-008	0	LISTA / TRIM / LEISTE	HR 40x15	1
11	30.R211-009	0	LISTA / TRIM / LEISTE	HR 70x15	1
12	30.R211-013		CELIST / JAW / BACKE		1
13	30.R211-014	0	CELO / HEAD / STIRN	HR 120x30	1
14	30.R311-020	0	DRZAK / HOLDER / HALTER	HR 50x50	1
15	30.R311-113	0	KOSTKA / CUBE / WŪRFEL	TYC 80x30	1
16	90.001.25.031	0	SROUB IMBUS CERNENY / ALLEN HEAD BOLT / IMBUSSCHRAUBE	8x16	4
17	90.001.25.033	0	SROUB IMBUS CERNENY / ALLEN HEAD BOLT / IMBUSSCHRAUBE	8x25	10
18	90.001.25.050	0	SROUB IMBUS / ALLEN HEAD BOLT / IMBUSSCHRAUBE	M10X40	4
19	90.001.25.066	0	SROUB IMBUS / ALLEN HEAD BOLT / IMBUSSCHRAUBE	M12X120	1
20	90.002.2D.013	0	SROUB STAVECI / ADJUSTMENT BOLT / STELLSCHRAUBE	SROUB M8X25	8
21	90.003.2D.0XX	0	SROUB STAVECI / ADJUSTMENT BOLT / STELLSCHRAUBE	SROUB M8X18	4
22	90.004.2D.019	0	SROUB STAVECI / ADJUSTMENT BOLT / STELLSCHRAUBE	SROUB M16X40	1
23	90.011.27.007		SROUB / /	M8x12	6
24	90.013.27.003	0	SROUB / BOLT / SCHRAUBE	M5X10	2
25	90.100.55.005	0	MATICE / NUT / MUTTER	MATICE _ M8	8
26	90.100.55.008	0	MATICE / NUT / MUTTER	MATICE _ M16	1
27	91.270.006	0	SNIMAC MAGNET. / MAGNETIC SENSOR / MAGNETSENSOR		1
28	95.700.026	0	POUZDRO / SLEEVE / BŪCHSE	50X50	4
29	95.860.001	0	HLAVICE MAZACI / HEAD / KOPF	KM5	2
30	96.040.004	0	KROUZEK STIRACI / SCRAPER RING / ABSTREIFRING	50x62x5	4

7.23. Válec / Zylinder / Cylinder 1

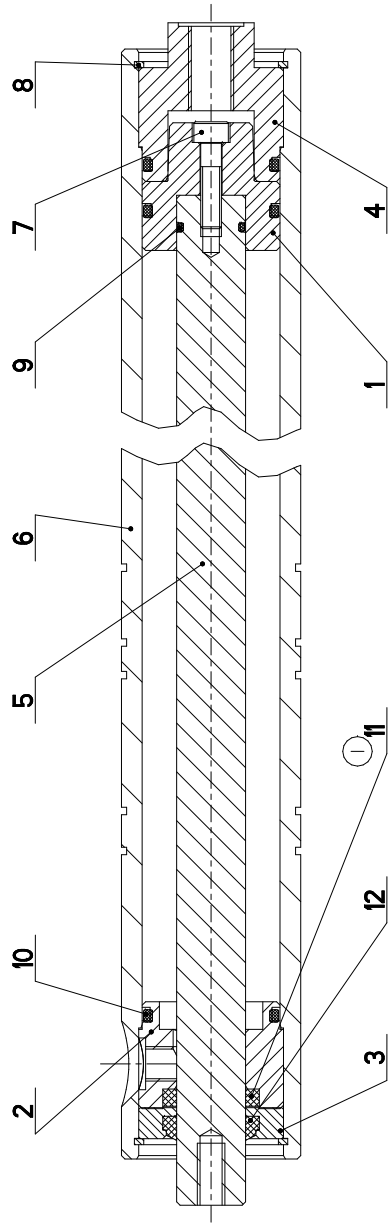

NAZEV SESTAVY VALEC	CISLO SESTAVY 201.3507-000	STROJ STG-260GA
	Konstruoval: STASTNY	
	Datum: 03. 03.2010	
	Meritko: 4:5	

7.24. Kusovník / Stückliste / Piece list – Válec / Zylinder / Cylinder 1

Cislo Sestavy	Ver.	Nazev sestavy
201.3507-000	1	VALEC/ROLLER/ZYLINDER

Poz.	Objednaci cislo	Ver.	Nazev polozky	Rozmer	Ks
1	30.2107-001	0	PIST / PISTON / KOLBEN	d 45	1
2	30.2107-002	0	PRIRUBA / FLANGE / FLANSCHE	TYC 45	1
3	30.2107-003	0	VIKO / COVER / DECKEL	d 45	1
4	30.2107-004	0	VIKO / COVER / DECKEL	d45	1
5	30.3407-102	0	PISTNICE / PISTON ROD / KOLBENSTANGE	d 20f7	1
6	30.3507-001	3	VALEC SVERAKU / VICE CYLINDER / SCHRAUBSTOCKZYLINDER	TR 52/40H8	1
7	90.001.25.019	0	SROUB IMBUS / ALLEN HEAD BOLT / IMBUSSCHRAUBE	M6X25	1
8	95.801.006	0	KROUZEK POJIST.VNITR / INSIDE SAFETY RING / SICHERUNGSRING INNEN	POJISTNY KROUZEK 42	2
9	96.002.007	0	KROUZEK O DYNAMICKY / DYNAMIC O RING / O-RING DYNAMISCH	16X2	1
10	96.002.017	0	KROUZEK O DYNAMICKY / DYNAMIC O RING / O-RING DYNAMISCH	34X3	3
11	96.041.002 (1)	0	TESNENI / SEALING / DICHTUNG	601-20x28x5	1
12	96.060.002	0	KROUZEK STIRACI / SCRAPER RING / ABSTREIFRING	KROUZEK STIRACI 20	1

(1) O-KROUZEK 96.002.010 NAHRAZEN MANZETOU 96.041.002 29.4.2003 ROZKOSNY

Cislo Sestavy/Number of assembly/Nummer der Baugruppe; Verze (Ver.)/Version/Version; Nazev sestavy/Assembly title/Name der Baugruppe; Pozice (Poz.)/Position/Position; Objednaci cislo/Purchase order number/Bestellnummer; Nazev polozky/Volume title/Name der Position; Rozmer/Stock size/Abmessung

7.25. Válec / Zylinder / Cylinder 2

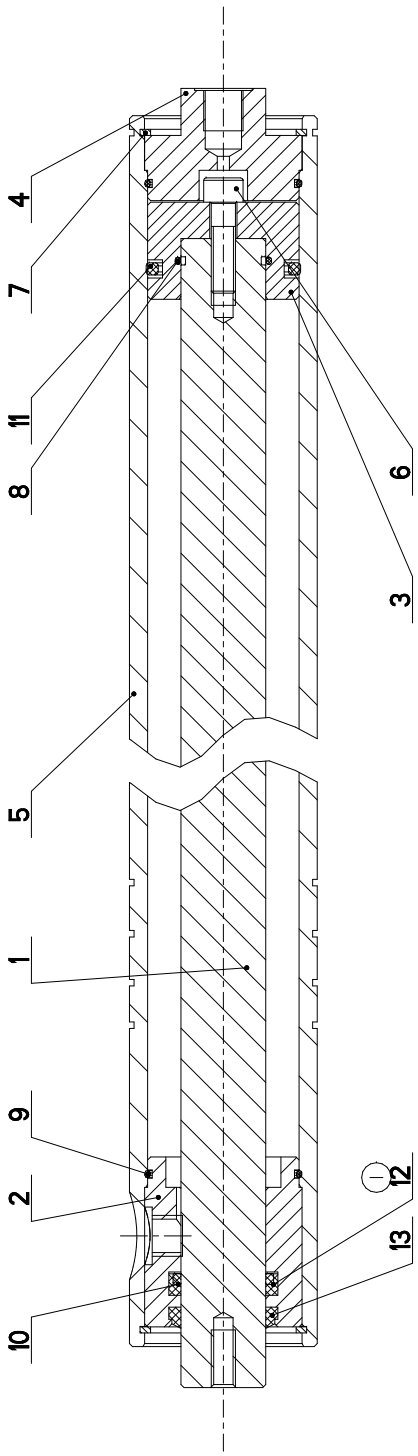

NAZEV SESTAVY VALEC	CISLO SESTAVY 201.3707-000	STROJ STG 320GA
	Konstruoval: ZEZULA	
	Datum: 04. 03.2010	
	Meritko: 7:10	

7.26. Kusovník / Stückliste / Piece list – Válec / Zylinder / Cylinder 2

Cislo Sestavy	Ver.	Nazev sestavy
201.3707-000	1	VALEC/ROLLER/ZYLINDER

Poz.	Objednaci cislo	Ver.	Nazev polozky	Rozmer	Ks
1	30.0607-102	1	PISTNICE / PISTON ROD / KOLBENSTANGE	d 28	1
2	30.1807-104	2	VIKO / COVER / DECKEL	TYC 55	1
3	30.2007-302	0	PIST / PISTON / KOLBEN	d 55	1
4	30.2007-304	0	VIKO / COVER / DECKEL	d 55	1
5	30.3707-001	3	VALEC SVERAKU / VICE CYLINDER / SCHRAUBSTOCKZYLINDER	TR 62/50H8	1
6	90.001.25.034	0	SROUB IMBUS / ALLEN HEAD BOLT / IMBUSSCHRAUBE	M8X30	1
7	95.801.009	0	KROUZEK POJIST.VNITR / INSIDE SAFETY RING / SICHERUNGSRING INNEN	POJISTNY KROUZEK 52	2
8	96.001.007	0	KROUZEK O STATICKY / STATIC O RING / O-RING STATISCH	25X2	1
9	96.001.013	0	KROUZEK O STATICKY / STATIC O RING / O-RING STATISCH	45X2	2
10	96.002.014	0	KROUZEK O DYNAMICKY / DYNAMIC O RING / O-RING DYNAMISCH	28X3	1
11	96.020.005	0	KROUZEK TESNICI / SEAL RING / DICHTUNGSRING	39.2X5.33	1
12	96.041.003 (1)	0	TESNENI / SEALING / DICHTUNG	601-28x36x7.1	1
13	96.060.003	0	KROUZEK STIRACI / SCRAPER RING / ABSTREIFRING	KROUZEK STIRACI 28	1

(1) O-KROUZEK 96.002.014 NAHRAZEN MANZETOU 96.041.003 24.4.2003 ROZKOSNY

Cislo Sestavy/Number of assembly/Nummer der Baugruppe; Verze (Ver.)/Version/Version; Nazev sestavy/Assembly title/Name der Baugruppe; Pozice (Poz.)/Position/Position; Objednaci cislo/Purchase order number/Bestellnummer; Nazev polozky/Volume title/Name der Position; Rozmer/Stock size/Abmessung

7.27. Podstavec / Untersatz / Base

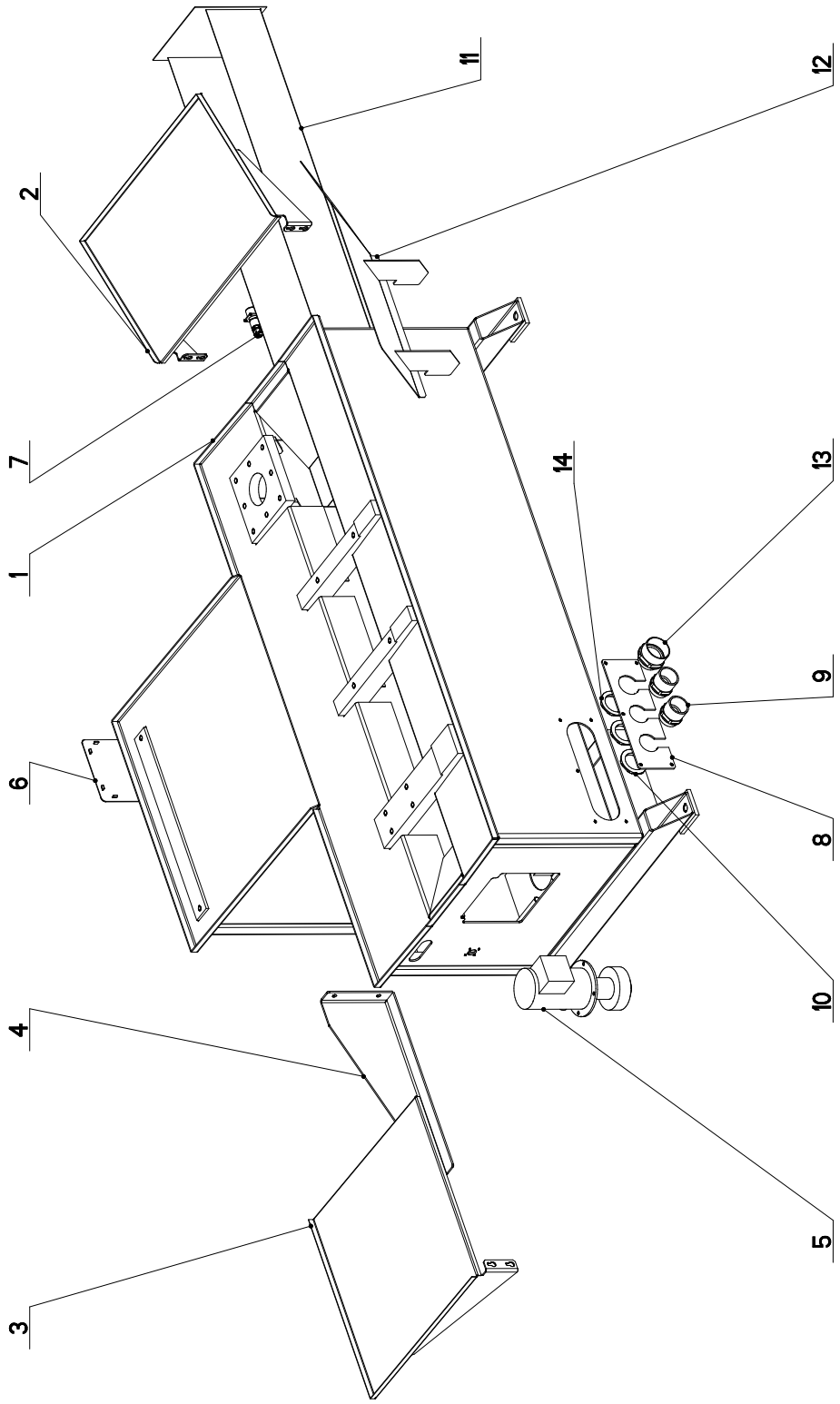

7.28. Kusovník / Stückliste / Piece list – Podstavec / Untersatz / Base

Cislo Sestavy	Ver.	Nazev sestavy
201.R201-050	0	PODSTAVEC/BASE/UNTERSATZ

Poz.	Objednaci cislo	Ver.	Nazev polozky	Rozmer	Ks
1	30.R201-051	0	PODSTAVEC / BASE / UNTERSATZ		1
2	30.R301-053	0	KRYT / COVER / ABDECKUNG		1
3	30.R201-005	0	KRYT / COVER / ABDECKUNG		1
4	30.R301-008	0	DRZAK / HOLDER / HALTER	P4x212	1
5	91.020.015	0	CERPADLO / PUMP / PUMPE	3 COA 4-12	1
6	94.101.039	0	ZASLEPKA / PLUG / BLINDFLANSCH	154x154x4	1
7	262.007	0	KONEKTOR / CONNECTOR / STECKVERBINDER		1
8	30.R201-056	0	VIKO / COVER / DECKEL	P 4x100	1
9	91.071.005	0	PRUCHODKA / LEADTHROUGH / DURCHFÜHRUNG		2
10	91.072.008	0	MATICE / NUT / MUTTER		2
11	30.R206-001	0	VANA / TANK / WANNE		1
12	30.R314-260	0	KRYT / COVER / ABDECKUNG		1
13	91.071.022	0	VYVODKA / BUSHING / TŮLLE		1
14	91.072.016	0	MATICE / NUT / MUTTER		1

Cislo Sestavy/Number of assembly/Nummer der Baugruppe; Verze (Ver.)/Version/Version; Nazev sestavy/Assembly title/Name der Baugruppe; Pozice (Poz.)/Position/Position; Objednaci cislo/Purchase order number/Bestellnummer; Nazev polozky/Volume title/Name der Position; Rozmer/Stock size/Abmessung

7.29. Ovládací panel / Bedienpult / Control panel

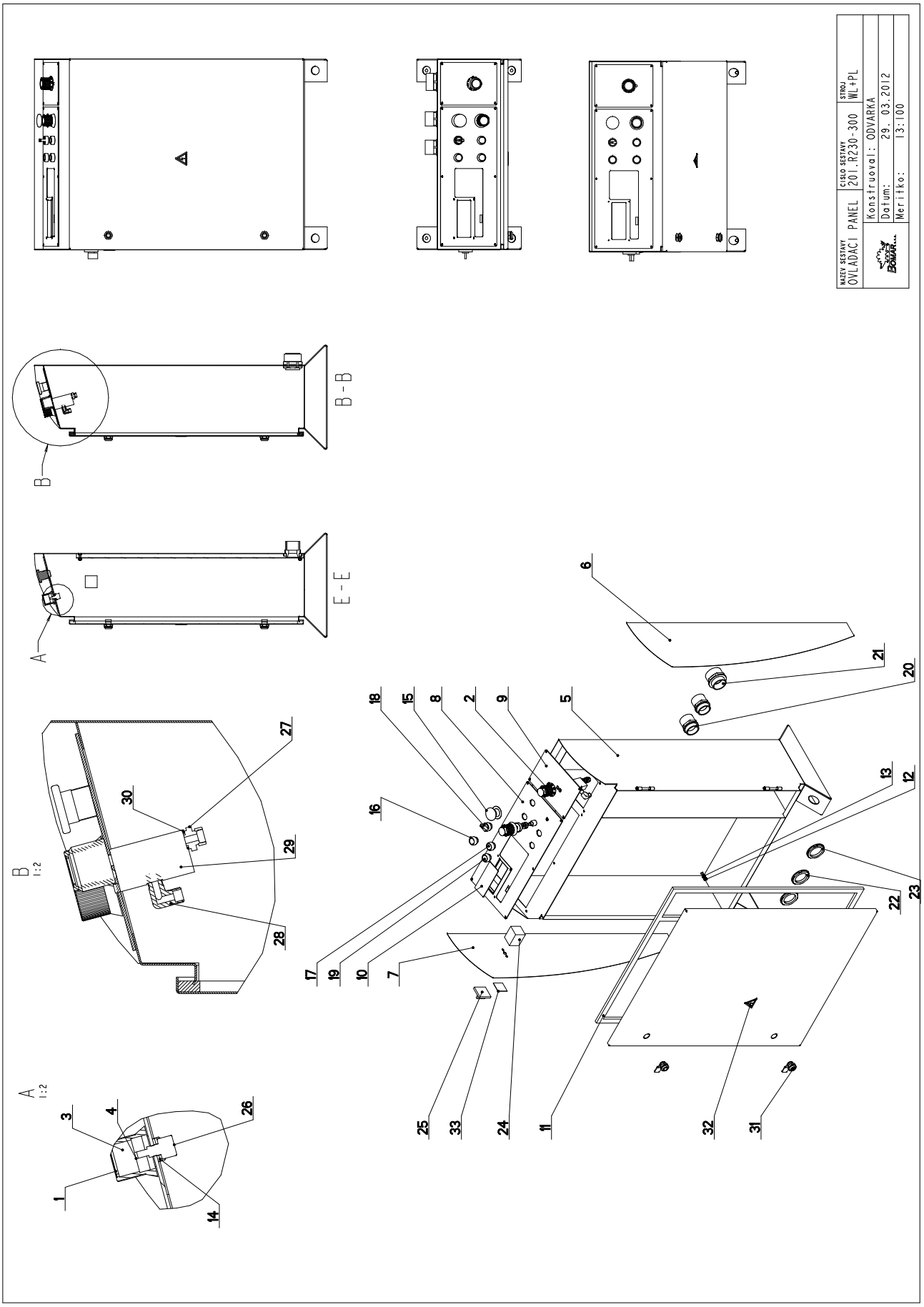

7.30. Kusovník / Stückliste / Piece list – Ovládací panel / Bedienpult / Control panel

Cislo Sestavy	Ver.	Nazev sestavy
201.R230-300	1	OVLADACI PANEL/CONTROL PANEL/BEDIENPULT

Poz.	Objednaci cislo	Ver.	Nazev polozky	Rozmer	Ks
1	30.6130-012	0	VIKO / COVER / DECKEL	P 0.5x 30x30	2
2	30.6130-018	0	HLAVICE / HEAD / KOPF	VYLISEK	1
3	31.6130-008	0	HLAVICE / HEAD / KOPF		1
4	30.R230-010	0	MEZIKUS / INTERMEDIATE PIECE / PASSSTŮCK	d 32	1
5	30.R230-201	3	SKRIN / BOX / KASTEN		1
6	30.R230-204	0	PLECH / PLATE / BLECH	P 1x220	1
7	30.R230-206	0	PLECH / PLATE / BLECH	P 1x220	1
8	30.R230-207	0	PANEL ELEKTRO / ELECTRO PANEL / PANEL	P 3x205	1
9	30.R230-208	0	DESKA / BOARD / PLATTE	P 3x150	1
10	31.R330-003	0	SKLO ORGANICKE / PLEXIGLASS / PLEXIGLAS	3x47.5	1
11	61.352.001	0	TESNENI / SEALING / DICHTUNG	TESNENI 19x10	1
12	90.100.55.004	0	MATICE / NUT / MUTTER	MATICE _ M6	4
13	90.150.50.004	0	PODLOZKA / WASHER / UNTERLEGSCHEIBE	PODLOZKA 6,4	4
14	90.150.50.006	0	PODLOZKA / WASHER / UNTERLEGSCHEIBE	PODLOZKA 10,5	2
15	91.060.030	0	HLAVICE TOTAL STOP / TOTAL STOP HEAD / TASTE TOTAL STOP		1
16	91.060.031	0	HLAVICE / HEAD / KOPF		1
17	91.060.035	0	HLAVICE / HEAD / KOPF		1
18	91.060.051	0	PREPINAC / SWITCH / UMSCHALTER		1
19	91.060.053	0	HLAVICE / HEAD / KOPF		1
20	91.071.005	0	PRUCHODKA / LEADTHROUGH / DURCHFŮHRUNG		2
21	91.071.022	0	VYVODKA / BUSHING / TŮLLE		1
22	91.072.008	0	MATICE / NUT / MUTTER		2
23	91.072.016	0	MATICE / NUT / MUTTER		1
24	91.170.003	0	SPINAC VACKOVY / CAM SWITCH / SCHALTER	LE2-12-1763	1
25	91.180.001	0	DESKA SPINACE / ELECTRIC BOARD / PLATINE		1
26	91.283.015	0	POTENCIOMETR / POTENTIOMETER / POTENTIOMETER	TP 195 4K7/N 20A	1
27	92.002.103	0	SROUBENI PRIME / DIRECT BOLTING / GERADE VERSCHRAUBUNG	G 1/4" tr12	1
28	92.004.001	0	SROUBENI UHLOVE / ANGLE BOLTING / WINKELVERSCHRAUBUNG	37701	1
29	92.152.001	0	VENTIL SKRTICI / CHOKE VALVE / DROSSELVENTIL	VS01-04/R 2.5-0	1
30	96.082.002	0	TESNENI / SEALING / DICHTUNG	KROUZEK CU 13/17	1
31	99.104.002	0	ZAMEK / LOCK / SCHLOSS	ZAMEK CINSKY	2
32	99.900.045	0	SAMOLEPKA / STICKER / AUFKLEBER		1
33	99.900.046	0	SAMOLEPKA / STICKER / AUFKLEBER		1

1.ZRUS.VIKO 30.R230-203,PANEL 30.R230-202,2xCEP 30.7217-028,2XPOJ.KROUZEK 95.802.003 (PRIDANO DO SKRINE 30.R230-201).
061/ZM110 29.3.2012 SLEZACKOVA

Cislo Sestavy/Number of assembly/Nummer der Baugruppe; Verze (Ver.)/Version/Version; Nazev sestavy/Assembly title/Name der Baugruppe; Pozice (Poz.)/Position/Position; Objednaci cislo/Purchase order number/Bestellnummer; Nazev polozky/Volume title/Name der Position; Rozmer/Stock size/Abmessung

7.31. Válec zvedací / Hebezylinder / Lifting cylinder

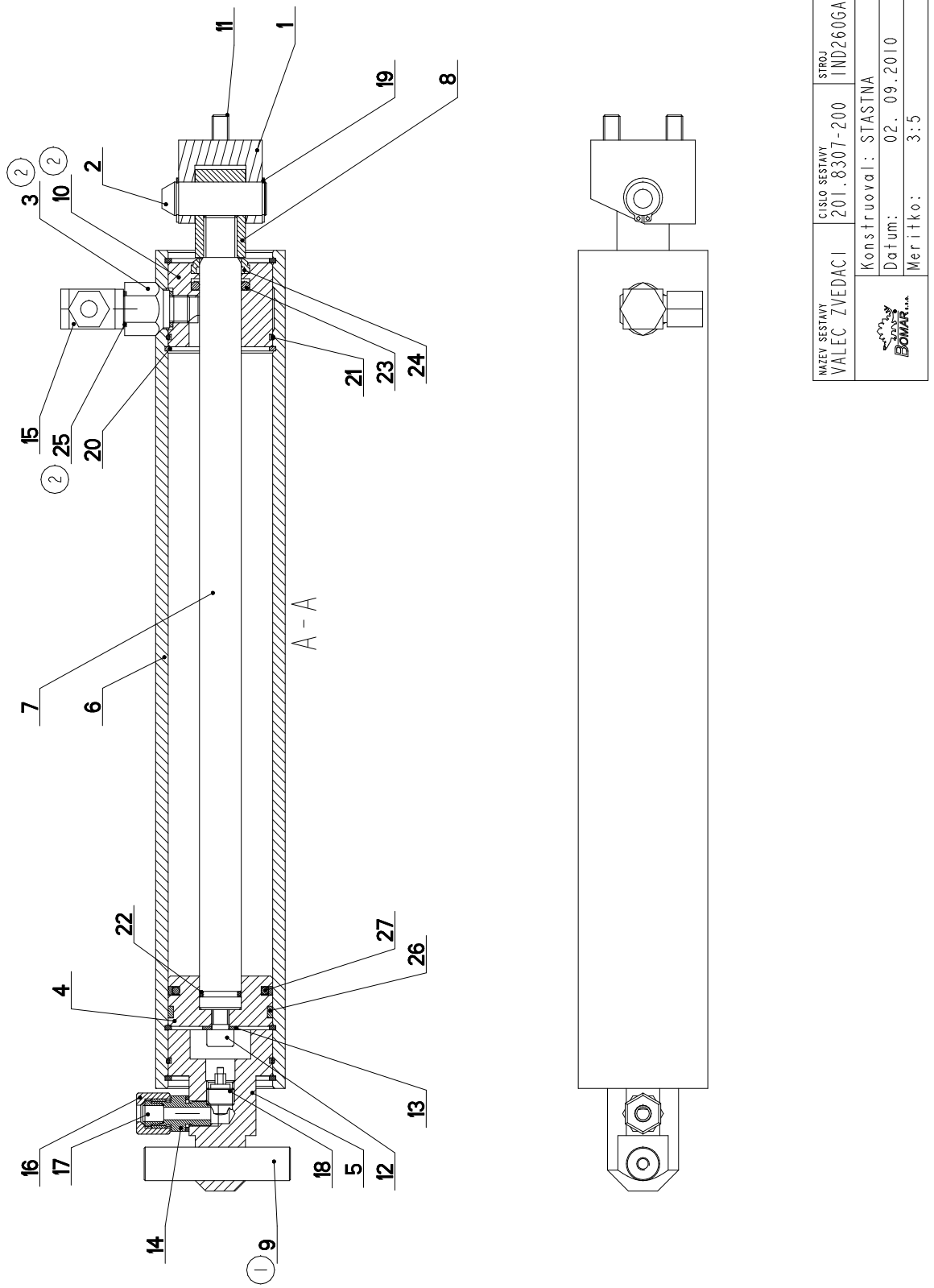

7.32. Kusovník / Stückliste / Piece list – Válec zvedací / Hebezylinder / Lifting cylinder

Cislo Sestavy	Ver.	Nazev sestavy
201.8307-200	2	VALEC ZVEDACI/LIFTING CYLINDER/HEBEZYLINDER

Poz.	Objednaci cislo	Ver.	Nazev polozky	Rozmer	Ks
1	30.0807-008	2	DRZAK / HOLDER / HALTER	HR 40x40	1
2	30.0807-009	1	CEP / LUG / BOLZEN	d 16h9	1
3	30.1807-005 (2)	3	SROUBENI / BOLTING / VERSCHRAUBUNG	6-HR 22	1
4	30.2807-004	0	PIST / PISTON / KOLBEN	d 55	1
5	30.4107-003	4	VIKO / COVER / DECKEL	TYC 50	1
6	30.8307-201	2	VALEC / ROLLER / ZYLINDER	TR 62/50H8	1
7	30.8307-203	2	PISTNICE / PISTON ROD / KOLBENSTANGE	d20	1
8	30.8307-204	0	DRZAK / HOLDER / HALTER	HR 25x25	1
9	30.8307-205 (1)	0	CEP / LUG / BOLZEN	d 16h9	1
10	30.K107-008 (2)	3	VIKO / COVER / DECKEL	d 55	1
11	90.001.25.031	0	SROUB IMBUS CERNENY / ALLEN HEAD BOLT / IMBUSSCHRAUBE	8x16	2
12	90.001.25.032	0	SROUB IMBUS CERNENY / ALLEN HEAD BOLT / IMBUSSCHRAUBE	8x20	1
13	90.150.50.005	0	PODLOZKA / WASHER / UNTERLEGSCHEIBE	PODLOZKA 8,4	1
14	92.002.001	0	SROUBENI PRIME / DIRECT BOLTING / GERADE VERSCHRAUBUNG	G 1/4"	1
15	92.003.001	0	SROUBENI UHLOVE / ANGLE BOLTING / WINKELVERSCHRAUBUNG	RSWS-08LR	1
16	92.013.001	0	SROUBENI PRIME / DIRECT BOLTING / GERADE VERSCHRAUBUNG		1
17	92.014.001	0	KROUZEK TESNICI / SEAL RING / DICHTUNGSRING	372405	1
18	92.151.001	0	VENTIL POJISTNY / SAFETY VALVE / SICHERUNGSVENTIL	VPN-H 1/4"	1
19	95.800.007	0	KROUZEK POJIST.VNEJS / OUTSIDE SAFETY RING / SICHERUNGSRING AUßEN	POJISTNY KROUZEK 16	2
20	95.801.018	0	KROUZEK POJIST.VNITR / INSIDE SAFETY RING / SICHERUNGSRING INNEN	POJISTNY KROUZEK 50	4
21	96.001.013	0	KROUZEK O STATICKY / STATIC O RING / O-RING STATISCH	45X2	2
22	96.002.007	0	KROUZEK O DYNAMICKY / DYNAMIC O RING / O-RING DYNAMISCH	16X2	1
23	96.041.002	0	TESNENI / SEALING / DICHTUNG	20/28x4	1
24	96.060.002	0	KROUZEK STIRACI / SCRAPER RING / ABSTREIFRING	20x28	1
25	96.082.002 (2)	0	TESNENI / SEALING / DICHTUNG	KROUZEK CU 13/17	3
26	96.084.001	0	KROUZEK VODICI / LEAD RING / FÜHRUNGSRING	GP6500500-T47	1
27	96.900.001	0	TESNENI KOMBINOVANE / COMBINATION SEALING / KOMBIDICHTUNG		1

1 KOLIK 16x70 DIN 6358 NAHRAZEN POZ. 30.8307-205 11.06.03 STASTNA

2.ZRUS.SROUBENI 30.3407-103 A NAHR.SROUBENIM 30.1807-005,ZRUS,VIKO 30.2807-002 A NAHR.VIKEM 30.K107-008, ZRUS.KROUZEK CU 10/14 96.082.001 A NAHR. KROUZKEM CU 13/17 96.082.002. 074/ZM091 2.4.2009 SLEZACKOVA

Cislo Sestavy	Ver.	Nazev sestavy
201.R204-020	0	KONZOLA/CONSOLE/KONSOLE

Poz.	Objednaci cislo	Ver.	Nazev polozky	Rozmer	Ks
1	30.2004-004	1	EXCENTR / CAM / EXZENTER	6HR 17	2
2	30.R204-021	0	KONZOLA / CONSOLE / KONSOLE	P 20-101	1
3	90.001.25.055	0	SROUB IMBUS / ALLEN HEAD BOLT / IMBUSSCHRAUBE	M10X70	2
4	90.101.55.006	0	MATICE / NUT / MUTTER	MATICE M12	2
5	90.150.50.006	0	PODLOZKA / WASHER / UNTERLEGSCHEIBE	PODLOZKA 10,5	2
6	90.150.50.007	0	PODLOZKA / WASHER / UNTERLEGSCHEIBE	PODLOZKA 13	2
7	90.150.50.008	0	PODLOZKA / WASHER / UNTERLEGSCHEIBE	PODLOZKA 15	2
8	95.001.023	0	LOZISKO / BEARING / LAGER	6302 2RS	2

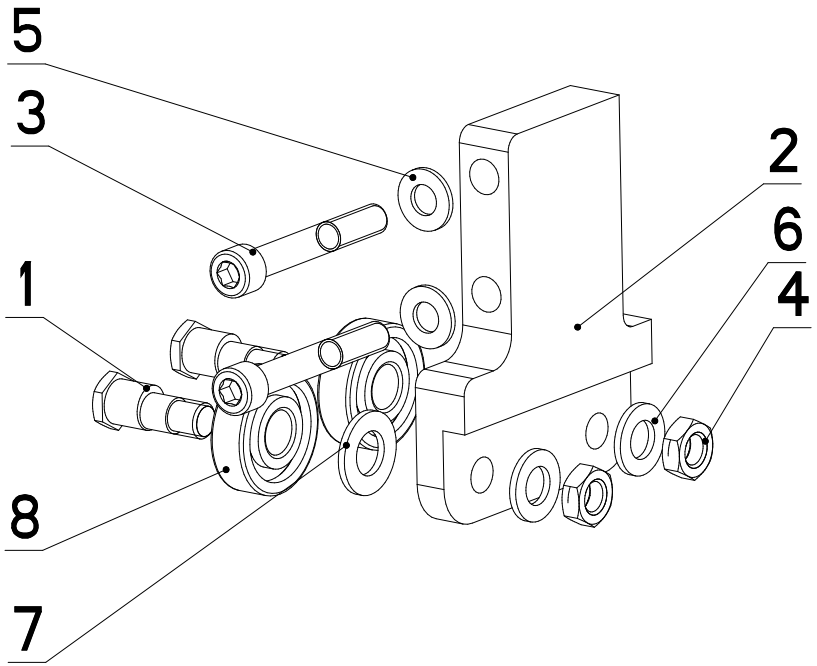

NAZEV SESTAVY	CISLO SESTAVY	VERZE			STROJ
SLOUP	201.R202-020	0	Datum: 23. 06.2010	1 KS/ST	PROLIN280
			Zhotovil: VINOHRADSKY		

cislo vykresu	ver.	nazev polozky	rozmer	delka	mat.vych	mat.kon.	pov.upr.	c.hm	ks	pozice sklad	puvod	Poznamka
30.R202-021		SLOUP			SVARENO		LAK	5.8	1		PR 280	
30.R202-008	0	VEDENI	HR 20x20	480	40.150.01.05	11 373 BL		1.1	1		wokr350H	
90.001.25.031	0	SROUB IMBUS CERNENY	8x16		DIN 912 8,8				6	V05 -		
90.001.25.057	0	SROUB IMBUS CERNENY	M12x25		DIN 912 8,8				4	V05 -		
90.301.0Z.023	0	KOLIK VALCOVY MEKKY	KOLIK 6X26						2			

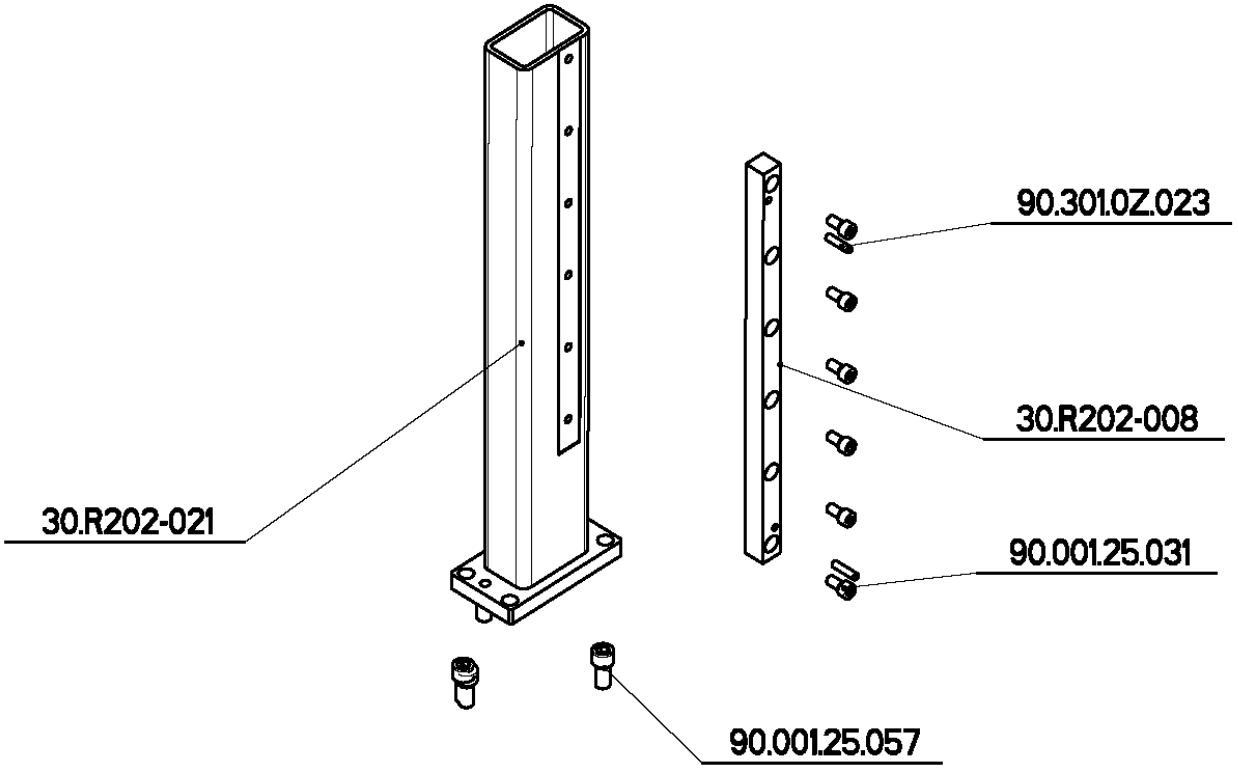

7.35. Sloup / Säule / Pole 2

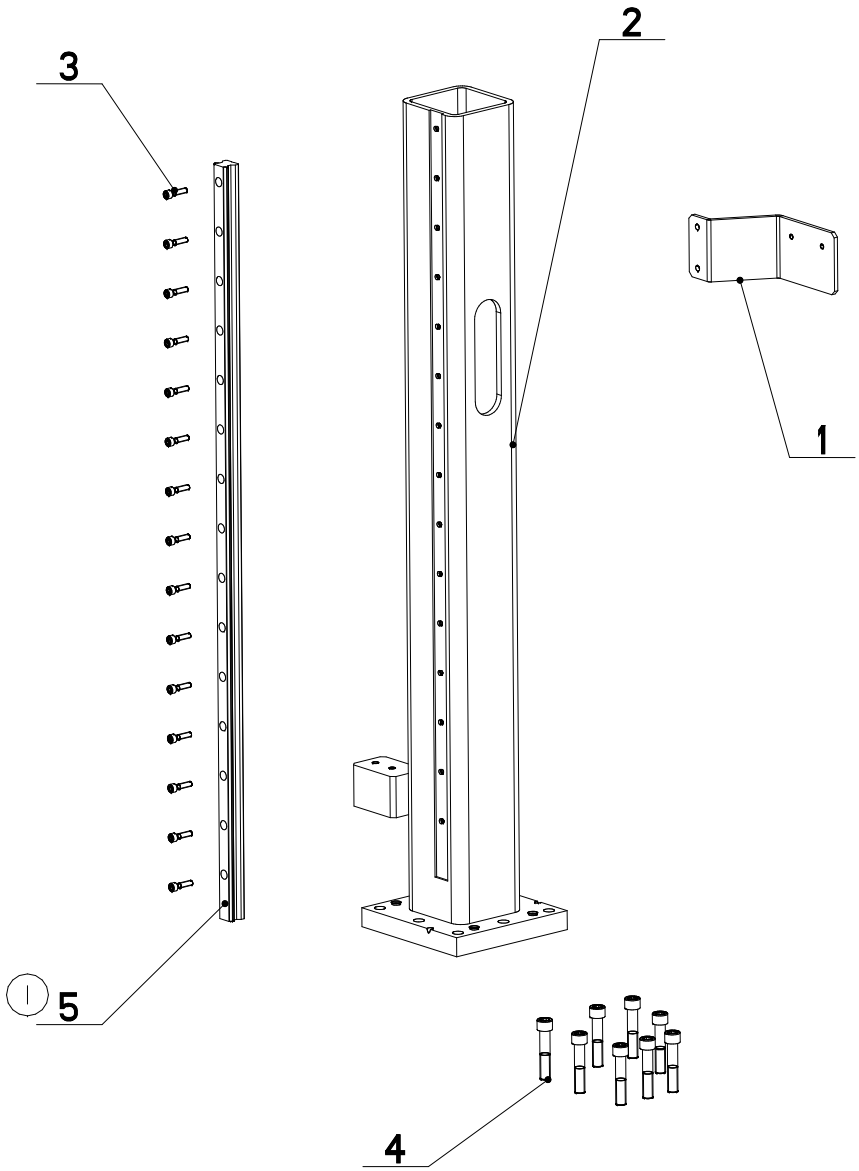

NAZEV SESTAVY	CISLO SESTAVY	STROJ
SLOUP	201.R202-050	PL 280

BOMAR s.r.o.	Konstruoval: ODVARKA
	Datum: 16. 03.2012
	Meritko: 7:50

7.36. Kusovník / Stückliste / Piece list – Sloup / Säule / Pole 2

Cislo Sestavy	Ver.	Nazev sestavy
201.R202-050	1	SLOUP/POLE/SÄULE

Poz.	Objednaci cislo	Ver.	Nazev polozky	Rozmer	Ks
1	30.R202-013	0	DRZAK / HOLDER / HALTER	P 5x75	1
2	30.R202-051	1	SLOUP / POLE / SÄULE		1
3	90.001.25.019	0	SROUB IMBUS / ALLEN HEAD BOLT / IMBUSSCHRAUBE	M6X25	15
4	90.001.25.063	0	SROUB IMBUS / ALLEN HEAD BOLT / IMBUSSCHRAUBE	M12X60	8
5	99.200.309 (1)	0	VEDENI LINEARNI / LINEAR GUIDE / LINEARE FUHRUNG	MSA 25R 915 E=20	1

1.ZRUS.LIN.VEDENI 99.200.026 A NAHR.99.200.309 . 056/ZM097 16.3.2012 SLEZACKOVA

Cislo Sestavy/Number of assembly/Nummer der Baugruppe; Verze (Ver.)/Version/Version; Nazev sestavy/Assembly title/Name der Baugruppe; Pozice (Poz.)/Position/Position;
Objednaci cislo/Purchase order number/Bestellnummer; Nazev polozky/Volume title/Name der Position; Rozmer/Stock size/Abmessung