Series Proline

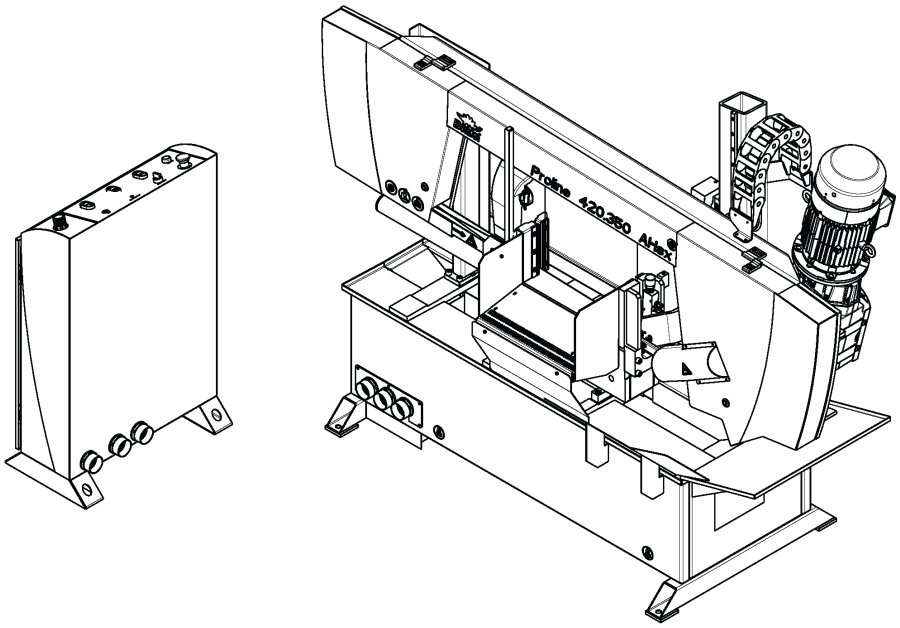

Proline 420.350 H
Proline 420.350 Hsx

Operating instructions

Before transporting and using the machine,
please read the instructions thoroughly!

Seriové číslo / Serien Nummer / Serial Number _____

Service and information

Your BOMAR dealer:

Direct BOMAR contact:

BOMAR spol. s r.o.	telefon:	+420 – 533 426 100
Těžební 1236/1	fax:	+420 – 533 426 109
62700 Brno	e-mail:	info@bomar.cz
Czech Republic, EU	www:	http://www.bomar.cz

We are available:

Mondays to Fridays	7^{00} – 16^{00}

Version:

1.16 / May 2024

rev. 1

BOMAR, spol. s r.o. © – Subject to modifications and amendments.

EC Declaration of Conformity

[1) 2)] We:

BOMAR, spol. s r.o.
Těžební 1236/1
627 00 Brno, Czech Republic
Id. No: 48908827
declare herewith

that the following designated device based on its conception and construction as well as the design launched by us meets the relevant basic safety requirements of the decrees of the government.

This statement applies exclusively to the machine device in conditions in which it was brought to the market. It does not apply to parts subsequently added by the end user or to modifications performed subsequently by the end user.

In the event of any device modification not approved by us this declaration shall lose its validity

Name:	**Band Saw**
Type :	**Proline 420.350 H** **Proline 420.350 Hsx**
Serial number:	011-100 000
Manufacturer	**BOMAR, spol. s r.o., Těžební 1236/1, 627 00 Brno**

Product data

Determination:	for cross dividing and cutting of rolled and towed bars and profiles made of steel, stainless steel, non-ferrous metals and plastics
Description:	Stand, table, cutting unit with the saw band and drive, clamping device, cooling system, el. switch board with control panel.

Pneumatic *NO* ☒ *YES* ☐ Hydraulic *NO* ☐ *YES* ☒ Control system *NO* ☐ *YES* ☒

Technical data:	**Typ „H“**	**Typ „Hsx“**
Cutting rate	20–120 m.min-1	
Cutting angle	0°	
Characteristic cutting range	420 x 350 mm	

Documentation:
Technical documentation for this machine device was elaborated in compliance with Government regulation no. 176/2008, Annex 7, part A.

The device meets relevant requirements of the given directives: **2006/42/EC**
2014/30/EG

The applied harmonized standards, National standards and technical specifications:

ČSN EN ISO 12100:2011 + Opr.1:2020 + Opr.2 :2021	ČSN EN ISO 16093:2018	ČSN EN ISO 13857:2021
ČSN EN ISO 4413:2011		ČSN EN 60204 -1 ed.3:2019
ČSN EN 55011 ed.4:2017 + A1: 2017+ A11:2020 + A2:2020	ČSN EN 61000-6-2 ed.4:2019	ČSN EN IEC 61000-6-4 ed.3:2019

The product is safe on condition of the common and determined usage.

The conformity judging was performed according to §12, art..3a), of the Law no. 22/1997 Coll. as amended.

Brno, 15.08.2022

Point of issue, datum

BOMAR, spol. s r.o.
Těžební 1236/1, 627 00 Brno
Czech Republic
IČO: 48908827
DIČ: CZ48908827

Alfred Pichlmann, Managing Director

Name and function of the responsible subject, signature

1) Name, address and identification number of the subject issuing the conformity declaration (producer of importer)
2) Person authorized to complete the technical documentation
3) The authorized or accredited body co-operating on the conformity judging

!	If the equipment is installed without safety equipment offered by BOMAR, spol. s ro or its agents and used by the customer (or buyer) then EC declaration loses validity. EC Declaration of conformity is valid only if customer (buyer) installed the BOMAR safety equipment with the machine or with some other with equivalent safety device in accordance with current applicable regulations and standards. All machine elements and components that were built into the device by BOMAR, spol. s ro have been declared "identical" to a safety device, as offered by BOMAR, spol. s ro or its agents.

Content

1. BEZPEČNOSTNÍ POKYNY / SICHERHEITSHINWEISE / SAFETY NOTES 9

1.1. Machine determination 11
1.2. Protective suit and personal safety 11
1.3. Safety notes for machine operator 12
1.4. Safety notes for the servicing and repairs 13
1.5. Safety instructions for laser radiation sources 13
1.6. Safety notes for the servicing and repairs on hydraulic unit 14
1.7. Safety machine accessories 14
1.7.1. Emergency Stop Switch 14
1.8. Arm covers 15
1.8.1. Band saw cover 15
1.8.2. Brush cover 15
1.9. Safety guidelines for laser beam 16
1.10. Safety notes for the cooling 16
1.10.1. Instructions for first help 16
1.11. Umístění štítku stroje / Maschinenschild position / Position of machine label 17
1.12. Umístění bezpečnostních značek / Verteilung der Sicherheitszeichen / Position of safety symbols 18

2. DOKUMENTACE STROJE / DOKUMENTATION DER MASCHINEN / MACHINE DOCUMENTATION 21

2.1. Technická data / Technische Daten / Technical data 23
2.2. Rozměrové schéma / Aufstellzeichnung / Installation diagram 25
2.3. Popis / Beschreibung / Description 26
2.4. Transportation and stocking 27
2.4.1. Conditions for transportation and stocking 27
2.4.2. Transport and stocking preparations 27
2.4.3. Transport and stocking 27
2.4.4. Transportní schéma / Transport schema / Transport schneme 28
2.5. Activation 29
2.5.1. Machine working conditions 29
2.6. Band saw unpacking and assembling 29
2.6.1. Machine installing and leveling 29
2.6.2. First run of the power pack 30
2.6.3. Filling the reservoir with hydraulic oil 30
2.6.4. Kotevní plan / Verankerungsplan / Grounding plan 31
2.6.5. Electrical connection 32
2.6.6. Check the direction of the saw band 32
2.6.7. Check machine connection into electrical network 32
2.6.8. Filling of the cooling system 33
2.7. Check machine function 33
2.8. Machine disposal after lifetime 33
2.9. Saw band 34
2.9.1. Saw band size 34
2.9.2. Selection of the saw band tooth system 34
2.9.3. Saw band running-in 34
2.9.4. Tables for teeth selection 35

3. OVLÁDÁNÍ STROJE / BEDIENUNG DER MASCHINE / MACHINE CONTROL 37

3.1. Starting the band saw 39
3.2. Control panel 40
3.3. Machine control 42
3.4. Cycle breaking 42
3.5. Band saw adjusting 42
3.5.1. Cutting speed adjusting 42
3.5.2. Speed adjustment of the arm lowering 43
3.5.3. Electronic measuring device (optional accessories) 43
3.5.4. Saw frame upper position stop adjustment – lift arm adjustment 45
3.5.5. Saw frame lower position stop adjustment 46
3.5.6. Adjusting band guides 47
3.5.7. Brush adjustment 47
3.5.8. Setting of a cooling method 48
3.5.9. Halogen lighting of working area (optional accessory) 48
3.6. Material insertion 49
3.6.1. Handling agent selection 49
3.6.2. Insertion 49
3.6.3. Bundle material cutting 49

4. ÚDRŽBA STROJE / WARTUNG / MACHINE SERVICE.....51

4.1. Saw band dismantling.....53
4.2. Saw band instalation.....54
4.3. Saw band stretching and inspection.....55
4.3.1. Mechanical indicator of belt tightening.....55
4.3.2. Hydraulic indicator of belt tightening (optional accessory).....56
4.4. Adjusting of the limit switch of the saw band stretching.....57
4.4.1. Saw band run adjustment on stretching wheel.....57
4.5. Cooling agents and chips disposal.....58
4.5.1. Coolant device inspection.....58
4.5.2. Chips disposal.....59
4.5.3. Third coolant inflow (optional accessories).....59
4.5.4. Gun cleaning machines from chip (optional accessories).....60
4.6. Hydraulic, Greases and oils.....61
4.6.1. Gearbox oils.....61
4.6.2. Lubricant greases.....62
4.6.3. Lubrication.....62
4.6.4. Hydraulic oils.....63
4.6.5. Hydraulic unit service.....64
4.7. Machine cleaning.....64
4.8. Worn pieces replacement.....65
4.8.1. Hard metal guides replacement.....65
4.8.2. Round brush replacement.....65
4.8.3. Saw band guiding rollers replacement.....66
4.8.4. Stretching wheel replacement.....68
4.8.5. Driving wheel replacement.....70
4.8.6. Cooling pump replacement.....71

5. ZÁVADY / STÖRUNGEN / TROUBLESHOOTING.....73

5.1. Mechanical problems.....75
5.2. Electric and hydraulic problems.....77
5.3. Hydraulic problems.....78

6. SCHÉMATA / SCHEMAS / SCHEMATICS 81

6.1. Elektrické schéma / Elektroschema / Wiring diagrams – Proline 420.350 H.....83
6.1.1. 3×400 V + PE, 50 Hz.....83
6.1.2. 3×230 V + PE, 50 Hz.....109
6.2. Elektrické schéma / Elektroschema / Wiring diagrams – Proline 420.350 Hsx.....133
6.2.1. 3×400 V + PE, 50 Hz.....133
6.2.2. 3×230 V + PE, 50 Hz.....155
6.3. Hydraulické schéma / Hydraulikschema / Hydraulic scheme.....178

7. VÝKRESY SESTAV PRO OBJEDNÁNÍ NÁHRADNÍCH DÍLŮ / ZEICHNUNGEN FÜR BESTELLUNG DER ERSATZTEILE / DRAWING ASSEMBLIES FOR SPARE PARTS ORDER.....183

7.1. 201.R300-700 PROLINE 420.350 H.....184
7.1.1. 201.R300-700 Kusovník / Piece list / Stückliste - PROLINE 420.350 H.....185
7.1.2. 201.R300-700 PROLINE 420.350 H.....186
7.1.3. 201.R300-700 Kusovník / Piece list / Stückliste - PROLINE 420.350 H.....187
7.2. 201.R300-800 PROLINE 420.350 Hsx.....188
7.2.1. 201.R300-800 Kusovník / Piece list / Stückliste - PROLINE 420.350 H.....189
7.2.2. 201.R300-800 PROLINE 420.350 H.....190
7.2.3. 201.R300-800 Kusovník / Piece list / Stückliste - PROLINE 420.350 H.....191
7.3. 201.R230-500 Ovladací panel / Control panel / Bedienpult.....192
7.3.1. 201.R230-500 Kusovník / Piece list / Stückliste - Ovladací panel / Control panel / Bedienpult.193
7.4. 201.R302-050 Sloup / Pole / Säule.....194
7.4.1. 201.R302-050 Kusovník / Piece list / Stückliste - Sloup / Pole / Säule.....195
7.5. 201.R302-060 Sloup / Pole / Säule.....196
7.6. 201.R303-000 Svěrák / Vice / Schraubstock.....198
7.7. 201.R303-000 Kusovník / Piece list / Stückliste - Svěrák / Vice / Schraubstock.....199
7.8. 201.3707-000 Válec / Roller / Zylinder.....200
7.8.1. 201.3707-000 Kusovník / Piece list / Stückliste - Válec / Roller / Zylinder.....201
7.9. 201.R303-050 Skluz / Slide / Rutsch.....202
7.10. 201.Y307-010 Válec zvedací / Lifting cylinder / Hebezylinder.....204
7.10.1. 201.Y307-010 Kusovník / Piece list / Stückliste - Válec zvedací / Lifting cylinder / Hebezylinder 205
7.11. 221.R301-700 Podstavec / Base / Untersatz.....206
7.11.1. 221.R301-700 Kusovník / Piece list / Stückliste - Podstavec / Base / Untersatz.....207
7.12. 201.R302-730 Odměřování / Pole / Säule.....208
7.12.1. 201.R302-730 Kusovník / Piece list / Stückliste - Odměřování / Pole / Säule.....209
7.13. 201.Y302-070 Odměřování / Measuring / Gehrung smessung.....210
7.14. 201.R304-700 Rameno / Saw arm / Sägerahmen Proline 420.350 H.....212

7.14.1. 201.R304-700 Kusovník / Piece list / Stückliste - Rameno / Saw arm / Sägerahmen Proline 420.350 H 213
7.14.2. 201.R304-700 Rameno / Saw arm / Sägerahmen Proline 420.350 H....214
7.14.3. 201.R304-700 Kusovník / Piece list / Stückliste - Rameno / Saw arm / Sägerahmen Proline 420.350 H 215
7.15. 201.R304-800 Rameno / Saw arm / Sägerahmen Proline 420.350 Hsx....216
7.15.1. 201.R304-800 Kusovník / Piece list / Stückliste - Rameno / Saw arm / Sägerahmen Proline 420.350 Hsx....217
7.15.2. 201.R304-800 Rameno / Saw arm / Sägerahmen Proline 420.350 Hsx....218
7.15.3. 201.R304-800 Kusovník / Piece list / Stückliste - Rameno / Saw arm / Sägerahmen Proline 420.350 Hsx....219
7.16. 201.M304-020 Kartáč / Brush / Bürste....220
7.16.1. 201.M304-020 Kusovník / Piece list / Stückliste - Kartáč / Brush / Bürste....221
7.17. 201.0814-204 Kolečko / Wheel / Rolle....222
7.18. 201.M308-100 Napínání / Tensioning / Spannung....224
7.19. 201.M308-100 Kusovník / Piece list / Stückliste - Napínání / Tensioning / Spannung.225
7.20. 201.R304-040 Konzola/ console/ Konsole....227
7.21. 201.R310-000 Vedení pásu/ Belt guide/ Sägebandführung....228
7.21.1. 201.R310-000 Kusovník / Piece list / Stückliste - Vedení pásu/ Belt guide/ Sägebandführung.229
7.22. 201.2016-000 Regulace přítlaku/ Pressure regulation/ Schnittdruckregulation....230
7.22.1. 201.2016-000 Kusovník / Piece list / Stückliste - Regulace přítlaku/ Pressure regulation/ Schnittdruckregulation....231
7.23. 201.Y310-300 Kostka vodicí/ Lead cube/Führungsklotz....232
7.23.1. 201.Y310-300 Kusovník / Piece list / Stückliste - Kostka vodicí/ Lead cube/Führungsklotz....233
7.24. 201.Y310-400 Kostka vodicí/ Lead cube/Führungsklotz....234
7.24.1. 201.Y310-400 Kusovník / Piece list / Stückliste - Kostka vodicí/ Lead cube/Führungsklotz....235
7.25. 201.M304-022 Kryt / Cover / Abdeckung Proline 420.350 H....236
7.26. 201.R404-022 Kryt / Cover / Abdeckung Proline 420.350 Hsx....237
7.27. 201.M305-000 Převodovka / Transmission / Getriebe....238
7.28. 201.R305-500 Pohon/ Drive/ Antrieb Proline 420.350 Hsx....239
7.28.1. 201.R305-500 Kusovník / Piece list / Stückliste - Pohon/ Drive/ Antrieb Proline 420.350 Hsx....240
7.29. Volitelné příslušenství....241
7.29.1. 201.R314-100 Horní upínání/ Top clamping/ obere Klemm....241
7.29.2. 201.R314-100 Kusovník / Piece list / Stückliste - Horní upínání/ Top clamping/ obere Klemm 242
7.29.3. 201.R314-400 Horní upínání/ Top clamping/ obere Klemm....243
7.29.4. 201.R314-400 Kusovník / Piece list / Stückliste - Horní upínání/ Top clamping/ obere Klemm 244

1. Bezpečnostní pokyny / Sicherheitshinweise / Safety notes

The operating instructions must be read by the person, who keeps in touch with the machine before transportation, installation, using, servicing, reparation, stocking or removal!

Attention!
The operating instructions must be available at the machine! Keep the operating instructions in good condition!

The operating instructions include relevant information. The operator must familiarise himself with the install and operation, safety notes and machine servicing, because reliability and service life must be reached. The operating instructions must avoid risks, which are linked to work on the machine. Before transporting and using of the machine, please read the instructions thoroughly!

1.1. Machine determination

The band saw **Proline 420.350 H** / **Proline 420.350 Hsx** is determined for cutting and shortening of rolled bars and drawn bars and profiles from steels, stainless steels, non-ferrous metals and plastics **without angle cutting**.

Combustible materials are excluded for cutting! Any other usage and operation outside this range are unauthorized and the manufacturer/supplier does not accept any responsibility for any damages resulting from such misuse. **The operator has full responsibility!**

Attention!
Consider the safety signs on the machine. Do not remove or damage them!

The machine is equipped with safety and protective guarding for operator and machine protection. Nevertheless, this safety and protective guarding cannot prevent injury. Service personnel must read this chapter and comprehend it, before he starts to work on the machine. **Always keep instructions about work safety!** Service personnel must take into account other aspects of the risk, which refer to the ambient conditions and the material.

1.2. Protective suit and personal safety

Wear tight fitting overalls! Loose fitting clothes may be caught with machine parts and cause serious injury.

Wear protective gloves! Material cuts and saw band have sharp edges and may cause serious injuries.

Attention!
Gloves you can use only at working material replacement (saw band)! The machine and accessories must be inactive!
If the machine is running, you must not wear gloves! It is dangerous, because some parts of the machine can catch gloves!

Wear protective shoes with non-skid soles! The unsuitable shoes may cause balance loss and following injury. Falling work pieces may cause serious injuries too.

Wear protective goggles! Chips and cooling liquid may damage your eyes.

Always wear ear protections! Most of the machines emit up to 80 dB and may damage your hearing.

Do not wear jewellery and always tie back long hair! Moving machine parts can catch jewellery or loose hair and may cause serious injuries.

Operate the machine only when you are fit enough to work. Illnesses or injuries diminish concentration. Avoid machine work, which may compromise the safety of you and your colleagues!

1.3. Safety notes for machine operator

Attention!
Machine can be operated by person older than 18 years!
Machine can be operated only person physically and mentally fit for this activity

Only one person can operate machine. Machine operator is responsible for presence of other persons by the machine.

Close covers before the machine starting and check, if the covers are not damaged. Damaged covers must be repaired or changed. Do not start the machine, if the cover is removed! Check, if the electric cables are not damaged.

Keep instructions and orders about work safety!
Read the operating instructions, before you start to work on the machine! Keep the operating instructions in good condition!

- Do not hold the material for clamping to the vice and for cutting!

Attention!
Do not connect the machine to electricity if the covers are removed. Do not touch the electrical equipment.

- Do not operate with the buttons and the switches on the control panel, when you have gloves!
- For machine starting take care, that there is nobody in the working area of the machine (it means in the working area of the vice, the saw band, the saw arm etc.).
- In no circumstances, touch the rotating elements.
- Work on the machine only when the machine is in good condition!
- Check at least once in a shift, if the machine is not damaged. If the machine is damaged, you must bring the machine in order and you must inform your superior!
- Keep your working area clean! Ensure sufficient lighting in the working area.
- Take off the spilt water or the oil from the floor and dry it. Do not touch the cooling liquid with bare hands! Do not set the nozzle of the cooling liquid, when the machine is started on
- Do not remove the chips from the working area of the machine, when the machine is started on!
- Do not use the compressed air for the machine cleaning or for the chips removing!
- Use the protective instruments for chips removal!

1.4. Safety notes for the servicing and repairs

Attention!
Only a qualified professional can carry out the servicing and repairs of the electric equipment! Take special care during the work with electrical equipment. High voltage shock can have fatal consequences! Always keep notes about work safety! Otherwise, there is possibility of heavy injury!

Switch off the main switch and lock it, before you start service work! Otherwise, there is possibility of hazardous machine starting.

Only qualified person can do the servicing and repairs. For parts changing, use only parts, which are identical with the originals. Otherwise, there is possibility of health hazard. Use only recommended type of the hydraulic oils and oils and lubricants!

Do not remove or do not lock the limit switches or safety equipments! Any use of the saw, accessories or machine parts other than that intended by the BOMAR, spol. s r.o. company is not permitted. The guarantee on this product will be afterward lost and BOMAR, spol. s r.o. takes no responsibility for caused damages.

1.5. Safety instructions for laser radiation sources

Laser radiation sources may be used on the machine.

Warning signs and information about the corresponding laser class are placed near each laser source.

It is forbidden to look into the laser beams!

Depending on the design and optional equipment of the saw, laser radiation sources can be located in particular:

- on the saw feeder

- before the main vice of the band saw

- on a safety fence (laser barrier)

- on the section line projection device

Commonly used laser safety classes:

1 (laser barriers)

1M (laser barriers)

3R (Laser-Liner)

Attention!
It is necessary for correct functionality of a laser to regularly check the patency of the laser ray on the sensor and to clean the laser from impurities (clean rag + spirit) after easch shift. Be careful during the cleaning in order the laser was not been schratched and broken!.

1.6. Safety notes for the servicing and repairs on hydraulic unit

Compliance with the principles of cleanliness is basic requirement for trouble-free operation of hydraulic equipment. Hydraulic components are products made with high accuracy, and any contamination leads to a reduction lifetime or even malfunction. The consequences are very difficult to remove and expensive.

Always use clean tools. Parts and fasteners, which are part of a hydraulic circuit, never put away the dirty surface. The best cleaning agent is crepe paper, because the fibers of the cleaning cloths can also cause malfunction.

Protective cap from the threaded chamber remove just before the assembly of the unit.

Hoses and pipes before mounting flush with gasoline or other cleaning agent and blow compressed air.

All fittings must be properly tightened. However, do not raw power.

1.7. Safety machine accessories

Enhanced risk!
Do not come into or intervene in the cutting area.
Otherwise, there is possibility of heavy injury.

The machine is equipped with safety accessories. It protects the operator from injuries and the machine before damage. The safety accessories are blocking accessories, emergency switches and covers. Check once in a week the function of the safety accessories. If the safety accessories are functionless, you must stop work and repair or change the safety accessories.

1.7.1. Emergency Stop Switch

Emergency Stop Switch is used for emergency switching – off the machine in case defect or health hazard. By pressing **Emergency Stop Switch** will immediately stop all dangerous machine movements.

If any damages or fault appears, immediately press Emergency Stop Switch!

It is possible to release the pressed button by twisting of the upper part of the button.

The **Emergency Stop Switch** is placed at the control panel of the machine.

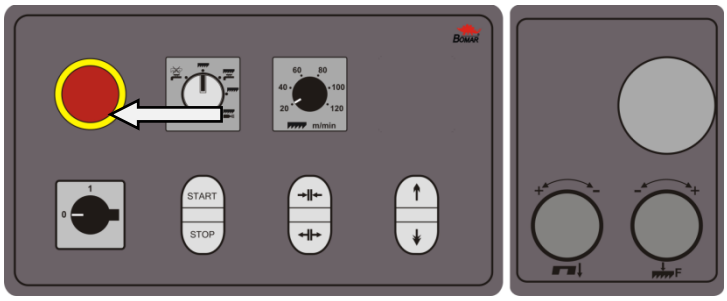

1.8. Arm covers

If the cover is opened during operation, the limit switch is opened and the band saw is stopped. The band saw is not possible to start in set mode.

The band saw is stated to the operation, when the covers is closed! Limit switched on saw arm control if cowers are open or not.

1.8.1. Band saw cover

It covers the visible area of the saw band from left guiding cube to the frame.

Never switch on the saw band driver if this cover is not mounted!

1.8.2. Brush cover

It covers the brush for saw blade.

Never switch on the saw band driver if this cover is not mounted!

1.9. Safety guidelines for laser beam

Band saw for the accurate detection of their material during cutting uses a laser beam is placed near saw arm.

It is forbidden to look into the laser beam.

Near laser beam is safety sticker.

The laser device is used for Class 1M.

Warning!
It is necessary to check the patency of the laser beam at the sensor and cleaned regularly, the laser after each layer of impurities (clean rag + alcohol), because of the correct functioning of the laser. Careful when cleaning procedure to prevent scratches and damage to the laser.

1.10. Safety notes for the cooling

Attention!

- ***When handling cooling agents always wear hazardous fluid-proof gloves!***
- ***Wear protective goggles!***
- ***Cooling liquid can get in contact with your eyes and may cause permanent severe injuries***

1.10.1. Instructions for first help

1. Pull off and safely remove polluted, soaked clothing.
2. For breathing, go out in the fresh air or look for first aid treatment.
3. Wash with water or use crèmes for contact with the skin.
4. Flush with water for eyes and look for first aid treatment.
5. For swallowing, drink a lot of water and induce vomiting. Look for medical help.

1.11. Umístění štítku stroje / Maschinenschild position / Position of machine label

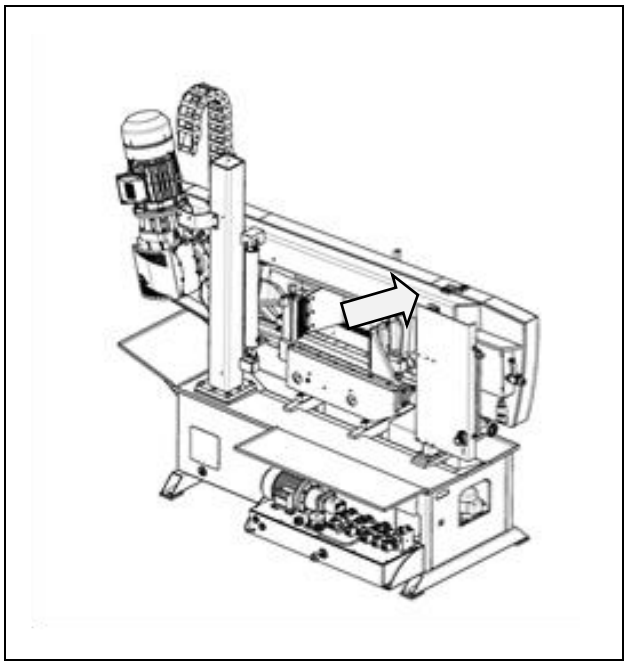

Machine label is placed on saw frame.

1.12. Umístění bezpečnostních značek / Verteilung der Sicherheitszeichen / Position of safety symbols

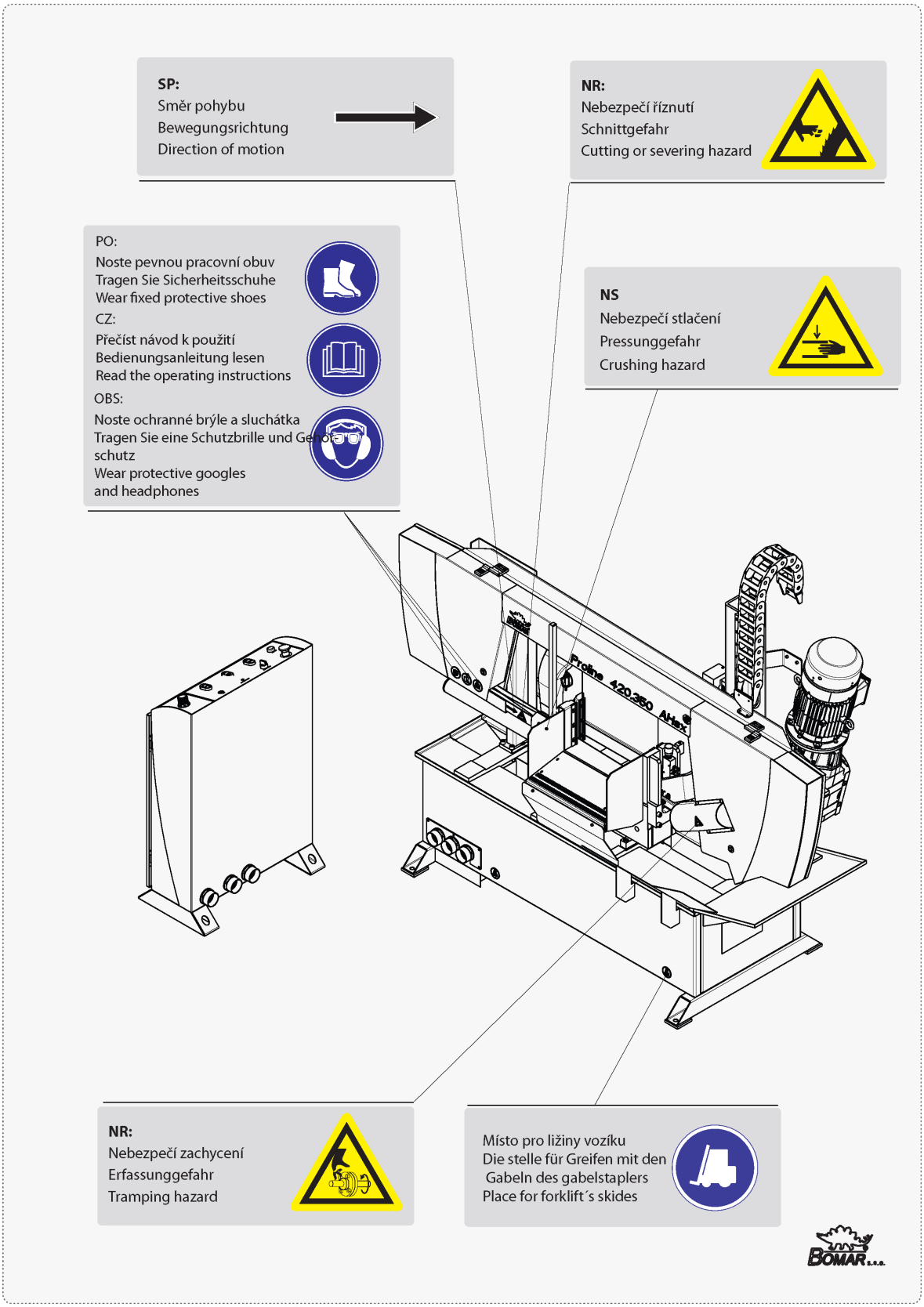

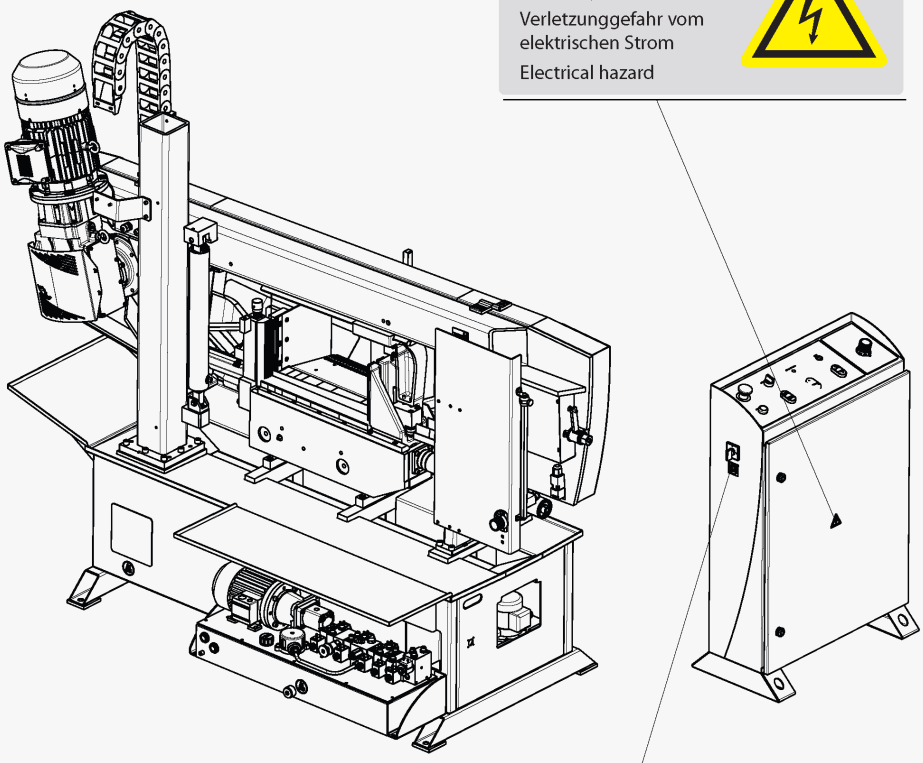

NE
Nebezpečí úrazu elektrickým proudem
Verletzunggefahr vom elektrischen Strom
Electrical hazard

HV
Hlavní vypínač
Hauptschalter
Main switch

2. Dokumentace stroje / Dokumentation der Maschinen / Machine documentation

2.1. Technická data / Technische Daten / Technical data

Hmotnost stroje / Maschinengewicht / Machine weight:	
• Hmotnost / Gewicht / Weight	800 kg
Rozměry stroje / Maschinengröße / Machine size :	
• Délka / Länge / Lenght	2 276 mm
• Šířka / Breite / Width	1 197 mm
• Výška / Höhe / Height	1 997 mm
Elektrické vybavení / Elektrische Ausrüstung / Electical equipment:	
• Napájení / Versorgungsspannun / Supply voltage	~3 x 400/230 V, 50Hz, TN-C-S/TN-C
• Příkon / Gesamptschlusswert / Total Input	
Proline 420.350 H	5 kW
Proline 420.350 Hsx	8 kW
• Max.jištění / Max. Vorschaltsicherung / Max. Fuse	
Proline 420.350 H	16 A
Proline 420.350 Hsx	40 A
• Krytí / Schutzart / Protection	IP 54
Akustický tlak / Schalldruckpegel / Acoustic pressure:	
• Proline 420.350 H • Proline 420.350 Hsx	L_{Aeqv}=76,3 dB
• **Pohon / Atrieb / Drive -** Proline 420.350 H	
• Typ / Typ / Type	00086182 4P; 230/400V; B14-FT130; size100
• Napájení / Versorgungsspannun / Supply voltage	~3×400V, 50Hz
• Výkon / Leistung / Output	3 kW
• Jmenovité otáčky / Motornenndrehzahl / Nominal speed	1440 min^{-1}
• **Pohon / Atrieb / Drive -** Proline 420.350 H**sx**	
• Typ / Typ / Type	W22 MHERAXXL 112-04 IE2 4P; 230/400V; B5, CSA/UL; size 112
• Napájení / Versorgungsspannun / Supply voltage	~3×400V, 50Hz
• Výkon / Leistung / Output	5,5 kW
• Jmenovité otáčky / Motornenndrehzahl / Nominal speed	1440 min^{-1}
Hydraulické zařízení / Hydraulikeinrichtung / Hydraulic equipment:	
• Typ / Typ / Type	PPM-AC0,48(0,6 kW/300/1500-P61/2,5-TM20-CB03-FRS001_137_1 (92.001.077)
• Výkon / Leistung / Output	0,6 kW
Chladící zařízení / Kühlmiteleinrichtung / Cooling equipment:	
• Typ / Typ / Type	41POMPA70120+22FILT0-PA
• Obsah nádrže / Volumen vom Kühlmittel / Capacity	45 l
Rozměr pásu / Sägebanddimension / Band size:	
4780x34(32)x1,1 mm	
Řezná rychlost / Schnittgeschwindigkeit / Cutting speed:	
20-120 m/min	

Řezné rozsahy / Schnittbereiche / Cutting size:

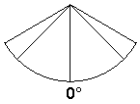			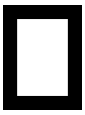	
0°	Ø350 mm	420×350 mm	420×350 mm	350×350 mm

Warning:

If the material detection device is installed on the machine then maximal workpiece height is 10 mm shorter.

If machine has bundle device then material maximal height is half.

Level of acoustic pressure:

Equivalent level of acoustic pressure A (noise) at operator position are L_{Aeqv}=76,3 dB. Mentioned values are levels of emission which doesn't have to represent safe levels. Factors which influence real level of acoustic pressure on machine operator are: working place characteristics, cut material, saw band. These factors have significantly influence on acoustic pressure.

2.2. Rozměrové schéma / Aufstellzeichnung / Installation diagram

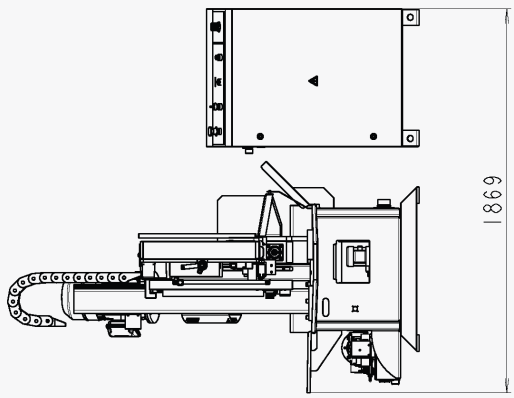

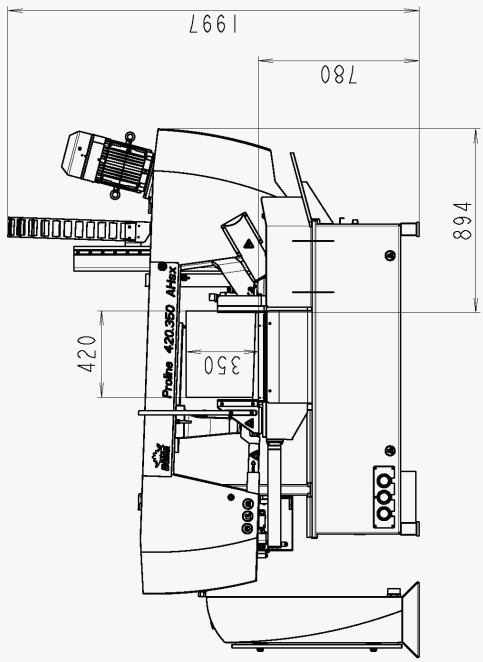

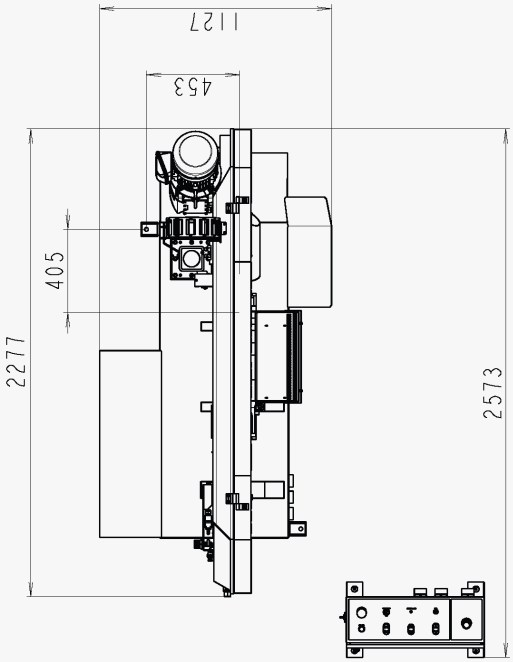

2.3. Popis / Beschreibung / Description

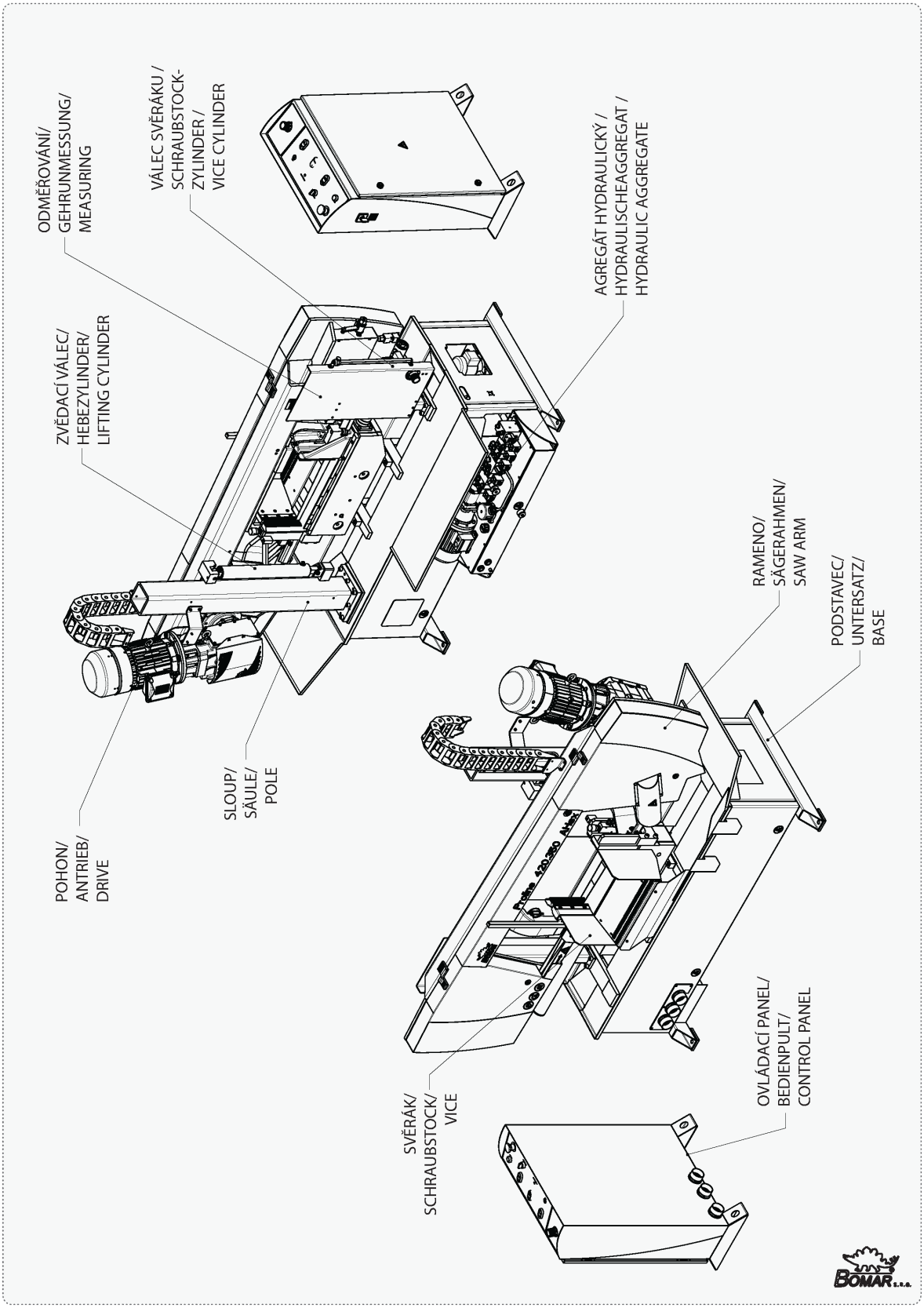

2.4. Transportation and stocking

2.4.1. Conditions for transportation and stocking

Keep recommendations for the manufacturers for transportation and stocking! If the recommendations are not kept, damage can occur to the machine.

- Don't use a forklift truck for handling the machine, if you do not have license for it!
- Don't move under suspended loads! Fault in lifting device may cause serious injury.
- Keep a safe distance from the machine during the transport.
- Temperature of the air from *-25°C to 55°C*, for a *short term* (max. 24 hours) temperature of the air until *70°C*
- Do not expose the machine to radiation (for example microwave radiation, ultraviolet radiation, laser radiation, x-ray radiation). Radiation can cause problems with the machine function and deteriorating condition of the isolation.
- Take measures, to prevent damage by dampness, by vibrations and by shakes.

2.4.2. Transport and stocking preparations

Close the vice and thoroughly oil all blank surfaces.

Lower the saw frame to the lowest position.

Make sure to empty the machine of all traces of the cooling agent.

Fasten all loose parts securely to the machine.

Pack and wrap the control desk securely to avoid damage during transport.

Fix the stickers stating the minimum approximate machine weight to at least five well visible places.

2.4.3. Transport and stocking

The machine must be secured during transportation. Screw on the palette to the floor of the van or the trailer. Be careful that the machine is not damaged during transportation. Store the machine only under conditions mentioned in the manual, to avoid damage of the machine.

It is forbidden to handle the machine any other way, than it is written in this operating instructions, the machine can be damaged.

2.4.4. Transportní schéma / Transport schema / Transport schneme

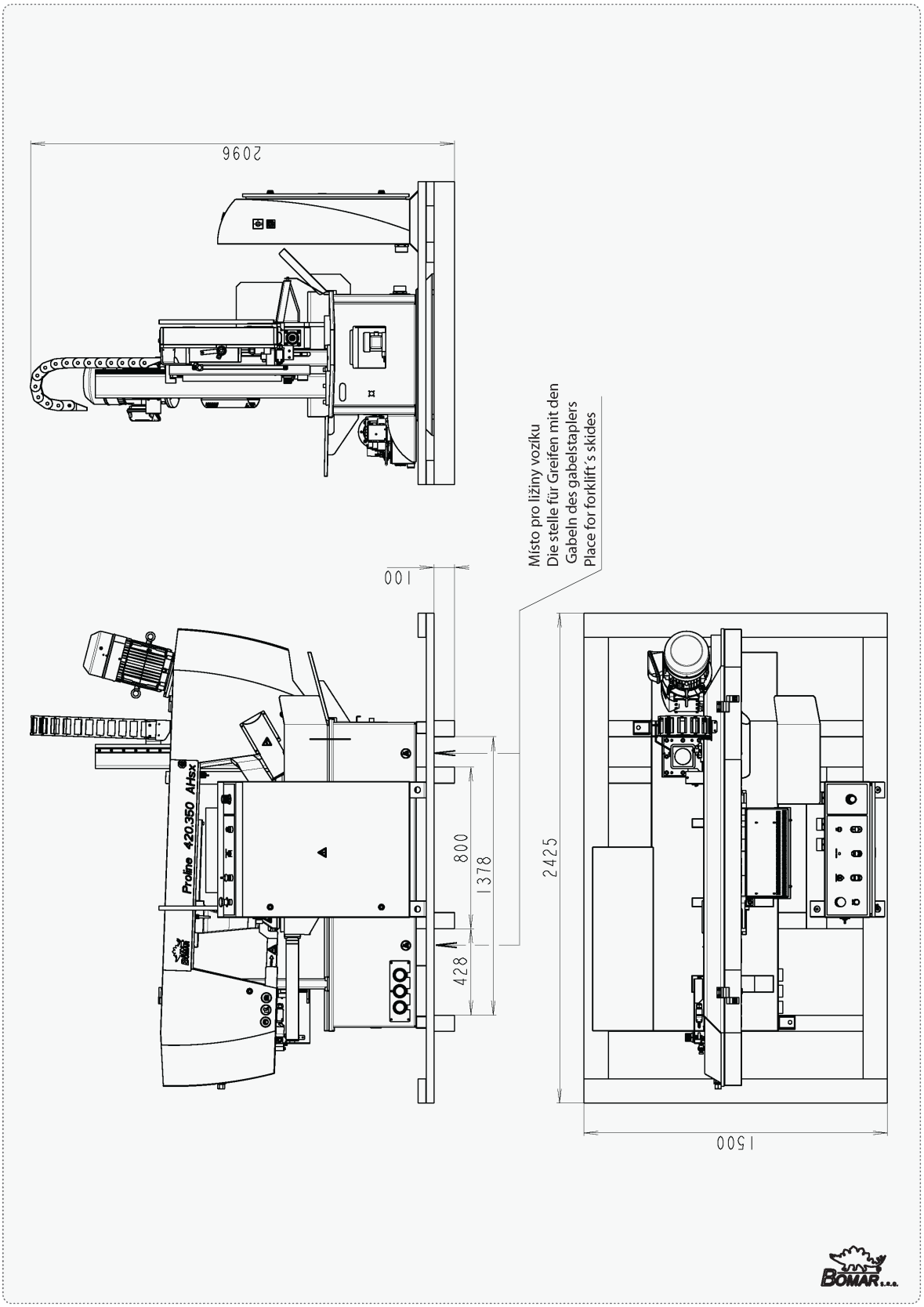

2.5. Activation

2.5.1. Machine working conditions

Keep the conditions of the manufacturer for machine operating! If recommendations are not kept, damage can occur to the machine.

The manufacturer warrants the correct function of the machine for these conditions:

- At temperature air from ***10°C to 40°C***, the temperature average during 24 hours must ***not exceed over 35°C***.
- At relative dampness of the air in the extend from 30% to 95% (not concentrate). Altitude lower than 1000 metres.
- Do not expose the machine to the radiation (for example microwave radiation, ultra-violet radiation, laser radiation, x-ray radiation). Radiation can cause problems with the machine function and deteriorating condition of the isolation.

Attention!
If the ambient temperature drops below 15 ˚ C is required before operating the machine to have switch on hydraulic unit around 10 minutes and then made several motion few times (for example, in manual mode) by all hydraulic cylinders. The reason is to heat hydraulic oil to the operating temperature for proper function of the pressure switches (and choke).

2.6. Band saw unpacking and assembling

Remove the packing from the machine and unpack all parts.

Attention!
Switch off the main switch and lock it, before you start assembly! Otherwise, there is possibility of hazardous machine starting.

If the hydraulic unit is outside the machine (the machine only connected hoses and cables), it needs to be placed and mounted on a solid basis (floors, etc.). The mounting holes are used on the bottom (bases) of the tank.

2.6.1. Machine installing and leveling

Check the floor supporting capacity before machine installing. If the floor capacity does not agree with requirements, you must prepare the necessary base for the machine.

Minimal requirement:

machine weight – Proline 420.350 H **/ Proline 420.350 Hsx –800 kg**

+ weight of accessories

+ maximum weight of material

- The machine must be leveled at the horizontal position. All feet of the machine must touch with the floor after leveling
- The machine must be leveled by means of the calibrated spirit level. Spirit level is put on the vice area. Set the roller conveyors according to the spirit level.
- For machine leveling, take care that there is sufficient available space for operation, repair work, servicing of the machine and handling the material..
- The machine including appended parts and accessories must be visible from the place of operation.

2.6.2. First run of the power pack

Before the first run check:

- The direction of the Pump, while run the power pack for max. 2seconds.
- The cooling fan of the motor has to rotate in the same direction as the arrow on the top of the motor cowling indicates.
- In case of wrong rotational direction, the electrical phase in the connection box is to be changed. This check is required after every disconnection from the power source
- Wiring matches with electrical and hydraulic diagrams
- the electric motors (pump and cooler) are properly connected and have the prescribed rotation
- the hydraulic accumulator with nitrogen gas to the specified value
- aux. elements work right (thermometer, level gauge, heater)

First run (Attention – working pressure on securing valve is set by producer in accoring the hydraulic diagram):

- In the short intervals activate an electric pump
- check for leaks and noise
- Bleed the hydraulic circuit
- if possible, test the circuit function with minimum load
- test the electrical equipment
- during operation monitor measuring equipment, noise, height and temperature of oil in the tank
- During this time a careful bleeding off for the whole hydraulic system is necessary. In case there is no bleeder port, the power pack will bleed itself after a while via the air breather on the tank or the return line filter.
- After multiple start-up.

2.6.3. Filling the reservoir with hydraulic oil

Oil regulations and recommendations of the manufacturer in the technical documentation (appendix) are to be carefully observed. For standard power packs we recommend the oiltype OH-HM32 (DIN 51524) of all known oil manufacturers.

Power packs have to be filled up with clean, pre-filtered oil! The purity of the hydraulic fluid must correspond to the class 10 NAS 1638 (reachable with filter ß =75)!

Filling from container, such as barrels, backets, etc. is not recommended or permitted!

The maximum oil level will be shown on the upper marking at the dipstick or the sight level glass. Overfilling has to be prevent. The maximum filling rate of 15 l/min shouldn´t be exceed.

Oil type	Kinematic viscosity v in mm^2/s in relationship to the fluid temperatur					Freezing point
	0°C	20°C	40°C	60°C	80°C	°C
OH-HM 32	220	100	32	15	7	-40
OH-HV 32	180	67	32	17	11	-40

2.6.4. Kotevní plan / Verankerungsplan / Grounding plan

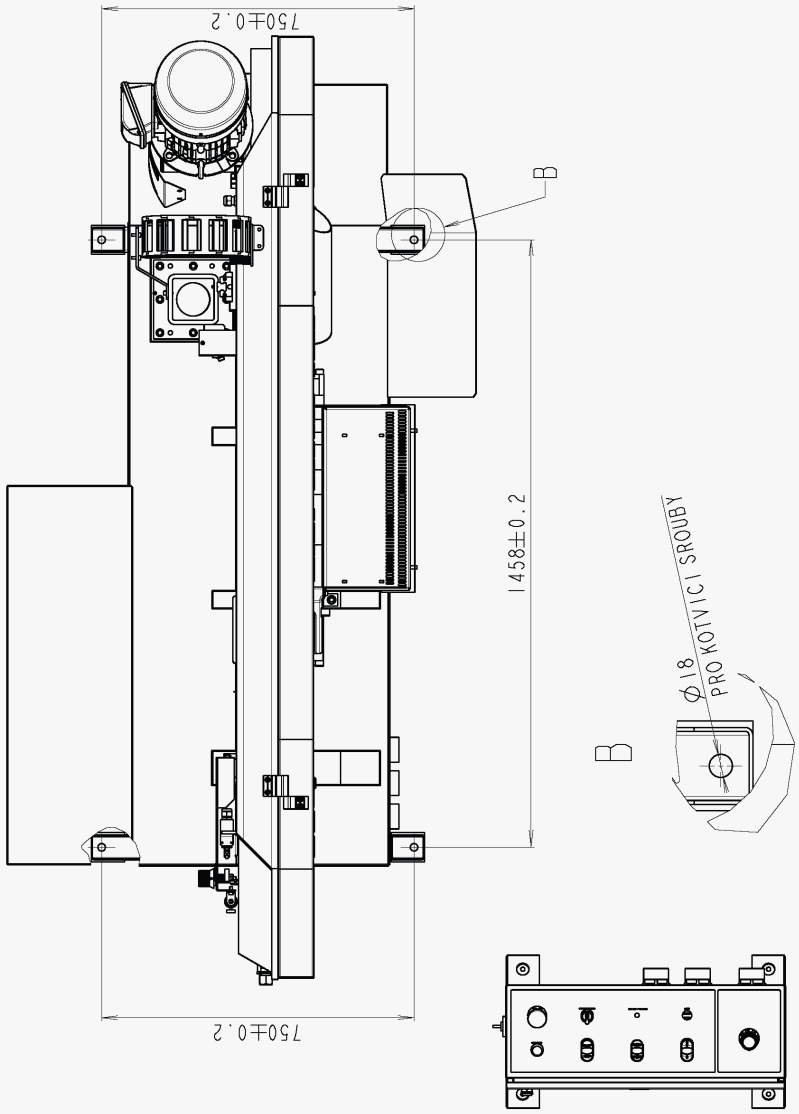

Kotvící materiál / Verankerungsmaterial / Grouding material

- 4× Chemická kotva/ Chemische Anker / Chemical anchor – 14 mm
- Vrtáno do hloubky / In die Tiefe gebohrt / Drilled to – 95 mm
- Šrouby / Schraube / Screws – M16 x 135 mm

Šrouby podložit deskami o min. rozměrech P10×100-100
- Die Schrauben mit Platten mit Minimaldimensionen P10×100-100 unterlegen
  Screew must be bottomed with plates (min. dimensions P10×100-100)

Požadavky na rovinnost podlahy / Anforderungen an die Bodenebenheit / Requirements for floor flatness

± 10 mm / 1 m

2.6.5. Electrical connection

Attention!
Only a qualified professional must carry out the servicing and repairs of the electric equipment! Take special care during work with electrical equipment. High voltage shock can have fatal consequences! Always keep notes about work safety.

Electrical parameters of the machine: See technical parameters chapter 2.

Note:
The values of the crosscut of the conductor and the rated current are in the norms.

Before connecting switch off the main switch of the power supply circuit for the machine and ensure dry place when doing connecting works!

Service voltage must agree with the line voltage! Crosscut of the supply line must respond with rated current for max. machine load.

Note:
The socket with the fork can be used only at the machines with the rated current less than 16 A and total input less than 3 kW.

Attention!
In this case the extra main switch becomes primary and the main switch on the machine has only secondary function.

In case the machine is connected with a direct connection, an extra main switch must be added which can be locked in zero position.

2.6.6. Check the direction of the saw band

After the machine has been successfully connected, briefly switch on the machine and put the driving engine of the band in the running position. The direction must be in accordance with the arrow direction on the saw band cover. In case the direction of the saw band does not match, two phases at the terminal strip must be switched.

2.6.7. Check machine connection into electrical network

Attention!
When you connect the machine to the electrical network secure a correct connection of all phases!
THE HYDRAULIC AGGREGATE ENGINE MUST NOT BE OPERATED IN REVERSED DIRECTION FOR MORE THEN 10 SECONDS!!!

2.6.8. Filling of the cooling system

Prepare the mixture of the water and the cooling liquid. Keep the concentration specified by manufacturer. Shift away the cover from the drainage hole. Fill the mixture of the water and the cooling liquid to the tank of the cooling system. Area of the tank for the cooling liquid is discovered from the chapter *Technical data*.

Let the drainage hole opened and with the sieve during operation, because it secures the right work of the cooling system. Filling the tank with the cooling liquid, take care that the liquid does not drip out of the tank and the tank does not overflowed.

Note:
If machine is equiped with microniser, fill microniser with prescribed cooling liquid. This made the Microniser ready for use.

2.7. Check machine function

Check, if the machine or some parts of the machine were not damaged during transport.

Check, if covers are installed and functional. Check by means of the Tenzomat if the saw band is correctly stretched. If it is necessary, you can stretch the saw band according to chapter *Selection and replacement of the saw band*. Values of the saw band stretching are on the Tenzomat. Switch on the main switch and check the motors and systems (saw band drive, hydraulic pump, cooling pump, chips conveyor).

Open and close the main vice. Turn the saw frame of the band saw from one outer position to other outer position. Raise the saw frame to the top position and drop the saw frame to the lowest position.

Start the machine with the cooling pump and let it run without load until the cooling system will be filled with cooling liquid. As soon as the cooling liquid starts to escape from the nozzles of the cooling system, the cooling system is ready for the operation. Carry one cycle of cutting without material. Check, if the machine runs with no irregularities. If all machine functions are right, the machine is ready for operation..

2.8. Machine disposal after lifetime

Blown out all service fluids (cooling liquid, hydraulic oil) into designated reservoir. Dismantle machine into separate parts and dispose them in accordance with valid directives.

2.9. Saw band

Refit the saw band cover only after you have installed and tightened the saw band.

2.9.1. Saw band size

4780x34(32)x1,1 mm

2.9.2. Selection of the saw band tooth system

The manufacturers provide the saw bands with constant and variable tooth system. The important factor for selection of the tooth system is length of the cutting canal with respect to the size of the product

BOMAR recommended Variable tooth system for band saw.

1. *Constant tooth system* – the saw band has parallel tooth pitch all over length. This way is suitable for cutting of solid material.
2. *Variable tooth system* – tooth pitch is variable. Variable tooth system is used for profiled materials and bundle cutting. Variable tooth pitch lowers vibration of the saw band, increases service life of the saw band and quality of the cutting area.

In tables, there are advised type of the tooth system depending on sizes and form of the cutting material.

Footnotes:

Z_pZ – teeth number on one inch S – tooth with zero angle of the teeth K – tooth with positive angle of the teeth

Examples of the tooth system marking:
32 S – number „32" means 32 teeth on one inch (that means constant tooth system), letter „S" marks teeth with zero angle of the tooth.

4–6 K – number „4–6" means 4 till 6 teeth on one inch
(that means variable tooth system); letter „K" marks teeth with positive angle of the teeth.

2.9.3. Saw band running-in

Running-in: Cut the material with the frame lowering reduced to 50% only. When vibrations occur increase or decrease the band speed.

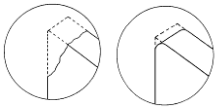

When cutting small pieces run the band until approximately 300 cm^2 of material has been cut. When cutting large pieces run the band for 15 minutes approximately. When the band has been run, increase the lowering-speed to normal speed. The running in of the saw band avoids micro-breaks on the cutting edges of new saw band ensuing from first excessive stress. This would decrease service life substantially. The optimal running in of the saw band produces ideal rounded cutting edges and therefore the conditions for an optimal service life.

Note: Run regrinding saw bands too.

2.9.4. Tables for teeth selection

SHAPED MATERIAL (D_p, S = mm)

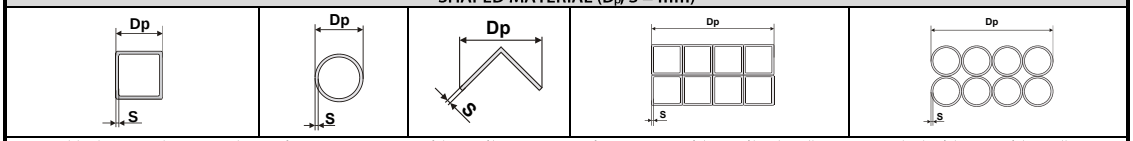

Note: Table shows tooth system selection for cutting one piece of the profile. For cutting of more pieces of the profiles (bundle), you must think of the size of the wall as double size of the wall of one profile (that means, size „S" equates to 2×S). In table, there are tooth systems constant and variable.

Size of the wall S [mm]	Tooth system (Z_pZ) Outer diameter of the profile D_p [mm]					
	20	40	60	80	100	120
2	32 S	24 S	18 S	18 S	14 S	14 S
3	24 S	18 S	14 S	14 S	10–14 S	10–14 S
4	24 S	14 S	10–14 S	10–14 S	8–12 S	8–12 S
5	18 S	10–14 S	10–14 S	8–12 S	6–10 S	6–10 S
6	18 S	10–14 S	8–12 S	8–12 S	6–10 S	6–10 S
8	14 S	8–12 S	6–10 S	6–10 S	5–8 S	5–8 S
10	-	6–10 S	6–10 S	5–8 S	5–8 S	5–8 S
12	-	6–10 S	5–8 S	5–8 S	4–6 K	4–6 K
15	-	5–8 S	5–8 S	4–6 K	4–6 K	4–6 K
20	-	-	4–6 K	4–6 K	4–6 K	3–4 K
30	-	-	-	3–4 K	3–4 K	3–4 K
50	-	-	-	-	-	3–4 K

Size of the wall S [mm]	Tooth system (Z_pZ) Outer diameter of the profile D_p [mm]					
	150	200	300	500	750	1000
2	10–14 S	10–14 S	8–12 S	6–10 S	5–8 S	5–8 S
3	8–12 S	8–12 S	6–10 S	5–8 S	4–6 K	4–6 K
4	6–10 S	6–10 S	5–8 S	4–6 K	4–6 K	4–6 K
5	6–10 S	5–8 S	4–6 K	4–6 K	4–6 K	3–4 K
6	5–8 S	5–8 S	4–6 K	4–6 K	3–4 K	3–4 K
8	5–8 S	4–6 K	4–6 K	3–4 K	3–4 K	3–4 K
10	4–6 K	4–6 K	4–6 K	3–4 K	3–4 K	2–3 K
12	4–6 K	4–6 K	3–4 K	3–4 K	2–3 K	2–3 K
15	4–6 K	3–4 K	3–4 K	2–3 K	2–3 K	2–3 K
20	3–4 K	3–4 K	2–3 K	2–3 K	2–3 K	2–3 K
30	3–4 K	2–3 K	2–3 K	2–3 K	1,4–2 K	1,4–2 K
50	2–3 K	2–3 K	2–3 K	1,4–2 K	1,4–2 K	1,4–2 K
75	-	2–3 K	1,4–2 K	1,4–2 K	1,4–2 K	0,75–1,25 K
100	-	-	1,4–2 K	0,75–1,25 K	0,75–1,25 K	0,75–1,25 K
150	-	-	-	0,75–1,25 K	0,75–1,25 K	0,75–1,25 K
200	-	-	-	0,75–1,25 K	0,75–1,25 K	0,75–1,25 K

SOLID MATERIAL (D = mm)

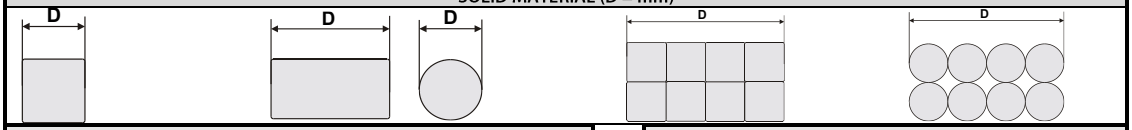

Constant tooth system	
length of the cut D	tooth system (Z_pZ)
to 3 mm	32
to 6 mm	24
to 10 mm	18
to 15 mm	14
15–30 mm	10
30–50 mm	8
50–80 mm	6
80–120 mm	4
120–200 mm	3
200–400 mm	2
300–800 mm	1,25
700–3000 mm	0,75

Variable tooth system	
length of the cut D	tooth system (Z_pZ)
to 30 mm	10 –14
20–50 mm	8–12
25–60 mm	6–10
35–80 mm	5–8
50–100 mm	4–6
70–120 mm	4–5
80–150 mm	3–4
120–350 mm	2–3
250–600 mm	1,4–2
500–3000 mm	0,75–1,25

3. Ovládání stroje / Bedienung der Maschine / Machine control

3.1. Starting the band saw

» 1. Switch on the main switch of the band saw. The main switch is placed on the switchboard side.

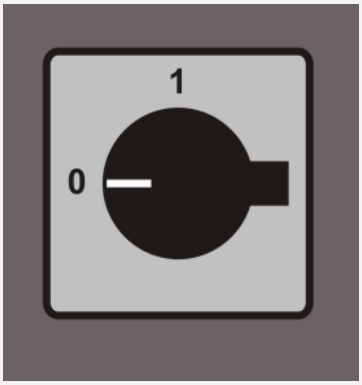

2. Switch the saw's safety (control) circuit on –button **No.4** at the control panel of the saw.

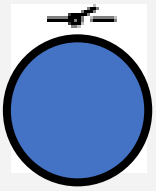

3.2. Control panel

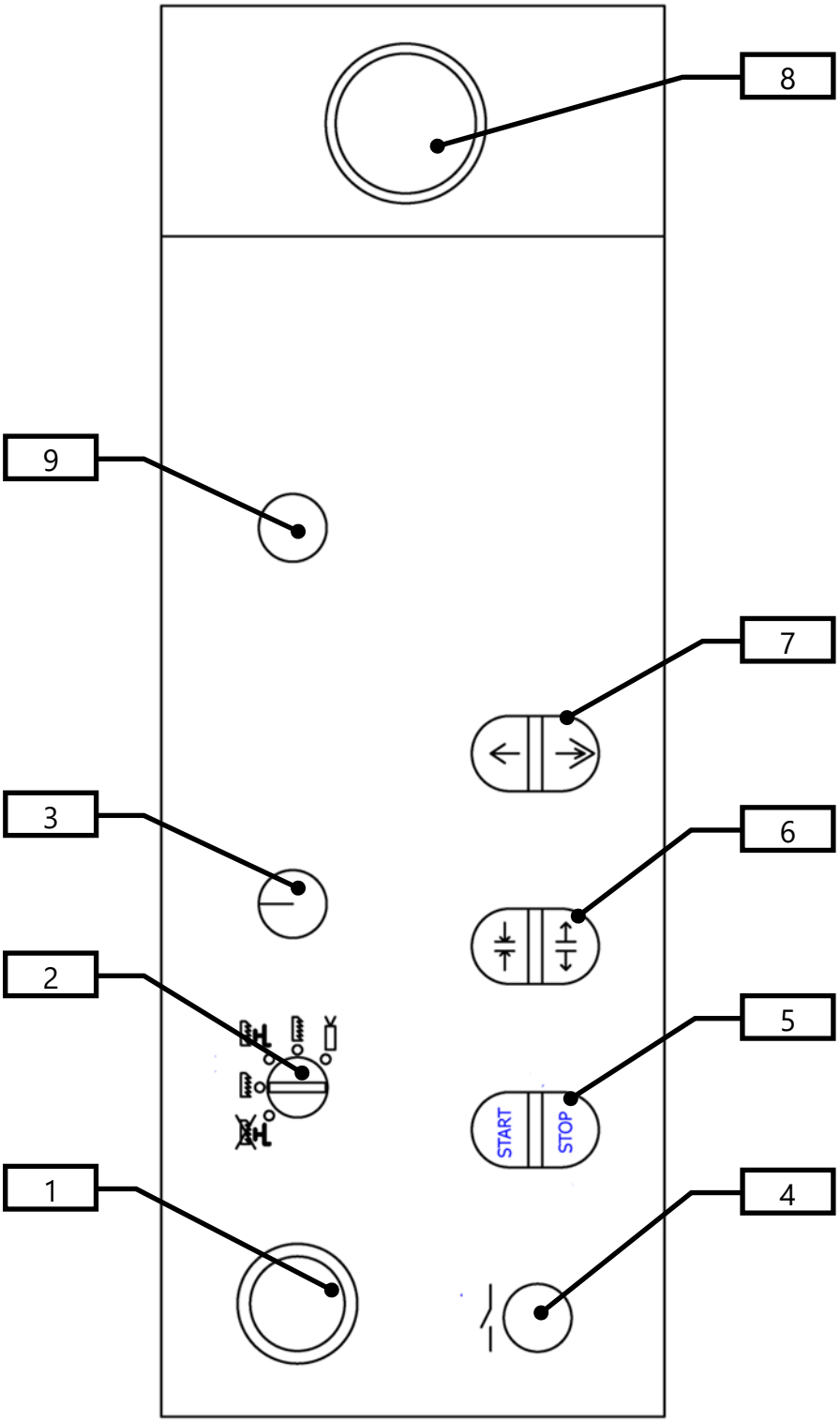

1	**Emergency Stop Switch** In a case of emergency turns the machine immediately off..
2	**Cooling system selection** You can select from three possibilities: See chapter "Setting of a cooling method"
3	**Frequency converter** Frequency converter sets the speed of saw band in the range of 20-120 m.min^{-1}
4	**Safety circuit** Button switch on the control circuit of control system
5	**START/STOP - Switch on / off the working cycle** Push of a button START starts the cutting cycle Button STOP stops or brake cutting cycle.
6	**Open/Clamp main vice** Pressing and holding the button in manual mode allows voltage and solve the main chip stocks. The feed vice must always be clamped earlier than the main vice
7	**Lift/Lower the saw arm** Pressing and holding button lifts or drops saw arm by the lifting hydraulic cylinder. It is possible to lift the arm using the whole range of the lifting hydraulic cylinder. As you move down saw arm, you can activate **rapid lowering** by pressing both buttons simultaneously
8	**Regulation valve** Regulation valve sets the lowering speed of the frame into the cut. The speed is limited by the adjustment of the pressure regulation in the cut on the guiding cubes. **Note:** If the throttle valve is closed too tightly, the valve seat may be damaged and may start to leak. Tighten the valve lightly.
9	**Laserliner – optional accessory** Switcher of the laser beam

3.3. Machine control

1. Lift the saw arm so that the lower portion of the bandsaw blade (cut) about 10 mm above the material is located (starting position). Raising the arm is ensured by the establishment ..
2. When pressing the START button to start the cutting cycle
3. Pressing the START button starts the saw blade drive, the arm begins to sink into the cut. After the cutting process, the arm moves to the preset lower position (see the lower arm position adjustment of the stop) and then raises the arm to the starting position. When pressing the START button, the starting position of the key is stored, ie that the arm after the cut returned to the position in which the START button is pressed.

3.4. Cycle breaking

» • **STOP button**

Semi-automatic cycle is interrupted by pressing **STOP** of the cycle

The arm stops fall into cut and saw blade is stopped.

By pressing button **START** of the working cycle, you can start the cycle.

• **Emergency Stop Switch**

In case of the risk, press **Emergency Stop Switch.**

After pressing button, saw band drive is immediately broken and the arm sinking is stopped.

• **Reactivation**

1. Turn **Emergency Stop Switch** according to the arrows (on the button).
2. Switch the saw's safety (control) circuit on –button **No.4** at the control panel of the saw.
3. Lift saw arm above cut material and push START button.

3.5. Band saw adjusting

3.5.1. Cutting speed adjusting

Band speed is possible adjusted continuously from 20 to 120 m / min.

Use the frequency convertor on control panel (pos. 3) to adjust requested speed of the saw band.

3.5.2. Speed adjustment of the arm lowering

Speed of the arm lowering is adjusted by regulation valve on control panel (pos.8)

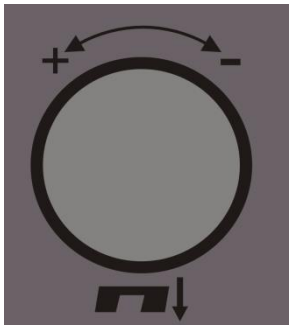

- Set the ***lower speed*** of the arm lowering to the cut by turning the switch ***clockwise***.
- Set the ***higher speed*** of the arm lowering to the cut by turning the switch ***anti-clockwise***.

> ***Notice:***
> ***If you keep closing the throttle valve too tightly, the valve seat may wear off which causes its leakage. Therefore, close the valve always gently.***

3.5.3. Electronic measuring device (optional accessories)

The current speed of vertical movement of the arm is displayed on a digital display which is mounted on the saw arm.

The measuring unit is set by the manufacturer.

However, its further functions may be easily controlled with four keys.

Digital indicator is placer on the band saw pedestal:

Zero position setting

Push the Incr/Abs key (even several times) until "0" is shown on the display.

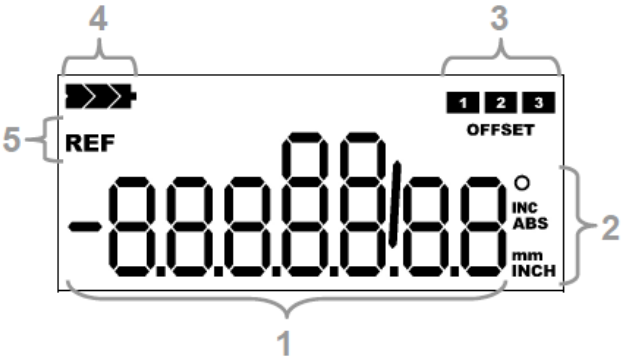

Digital measuring adjustment

Position	Description
1	Current position
2	Unit, measuring mode
3	Active additional constant (* key)
4	Battery status
5	Reference record shall be made – after the apparatus is switched on.

Description of key functions:

Key	Stop mode	Setting mode
F P	Basic key	Entering parameters (3 sec) Saving parameters and returning (3 sec)
F P + Set →	Reference recording (P09 value)	-
Set →	Change of displaying in inches	Selection of following decade
Incr / Abs ↑	Absolute and incremental measuring	Change of active decade o +1
* +\-	Selection of additional constant	Change of sign ⊠

Description of key functions at measuring initialisation:

Key	Description
F P	Induces calibration of the apparatus when it is switched on (battery inserted).
Incr / Abs ↑	Induces calibration of the apparatus and sets default values when the apparatus is switched on.

Description of digital measuring parameters:

Parameter	Description	Default value
P01 A	Measuring configuration: A = 0: positive direction of measuring A = 1: negative direction of measuring	0
P02 A	Measuring unit: A = 0: mm / symbol "mm" A = 1: inch / symbol "Inch" A = 2: mm / symbol "m" A = 3: mm / symbol "" A = 4: mm / no symbol	0
P03 A	Decimal point (0…4) > only for mm	2
P05 ABC	Key blocking: A: "Set" key (0 = active / 1 = inactive) B: "Incr/Abs" key (0 = active / 1 = inactive) C: "*" key (0 = active / 1 = inactive)	000
P08	Correction factor (0.0001…9.9999)	1.0000
P09	Reference (-9999999 … +9999999)	0
P10	Additional constant 1 (-9999999 … +9999999)	0
P11	Additional constant 2 (-9999999 … +9999999)	0
P12	Additional constant 3 (-9999999 … +9999999)	0
P13 A	Configuration of additional constants (0…3) A = 0: inactive (cannot be selected) A = 1: Additional constant 1 active A = 2: Additional constants 1 & 2 active A = 3: Additional constants 1 & 2 & 3 active	3
P90	No function	0
P99	Displaying firmware version	x.xx

3.5.4. Saw frame upper position stop adjustment – lift arm adjustment

The position of the guide arm is monitored by a transducer which is located in the rear arm portion. In order to shorten the cycle time, the amount of Armhubs can be adjusted according to the height of the material to be cut.

1. Insert material in a vice
2. Take arm using the **Arm up** to a position above the material.
3. Carefully pull off the arm of the material using the **Arm down**., or rapid move. Arm stops 5-10 mm above the cut material
4. Adjust the height of Armhubs material according to height so that the top of the adjustable eccentric with a scale indicating the desired value (the value of the eccentric-scale corresponds to the value of the material height)
5. Pressing the START button for the beginning of the cutting cycle.

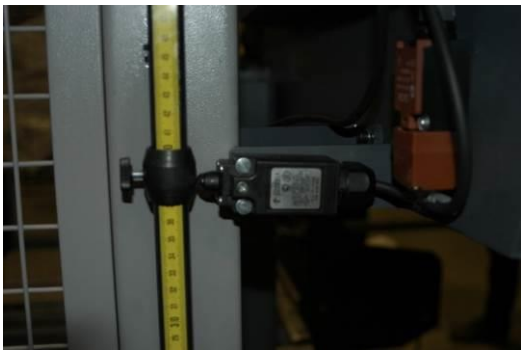

Setting the Armhubs using the incremental transducer of the upper arm position (optional accessories):

1. Insert material in a vice
2. Take arm using the **Arm up** to a position above the material.
3. Carefully pull off the arm of the material using the **Arm down**., or rapid move. Arm stops 5-10 mm above the cut material
4. Pressing the START button for the beginning of the cutting cycle
5. Of the saw, the material is cut to the lower arm position and moves back into the upper arm position in which the START button has been pressed (the saw notes the position - upper arm stop)

3.5.5. Saw frame lower position stop adjustment

The lower arm stop separates the bottom arm position.

This stopper is to be set according to the amount of material to be cut (the scale).

An incorrect setting of this attack, the saw can cut too deeply into the table of a vice or the material is not completely cut through.

Adjustment of the stop of the lower arm position with the aid of the adjustable eccentric to the column of the arm.

The limit is set by the manufacturer, this is not readjust

3.5.6. Adjusting band guides

If you want to achieve a smooth and precise cut, it is helpful to position the guide cube as close as possible to the material.

1. Release the stopping lever of the listel. Move the left part of the guide so that the left edge of the guide blocks is as close as possible cutted material.
2. Lower the frame to the lower position and check the position of the guide cube towards vice loading area. The guide cube must be a distance of at least 10 mm from the vice loading area.
3. Tighten the lever of the gib and check the guide cube setting once more for possible collision with binding table or vice jaw.

3.5.7. Brush adjustment

The brush for chip removal from the saw band influences cutting durability saw band lifetime and wheels lifetime, hard metal guides and finally the cut accuracy. Brush adjustment must be checked every shift.

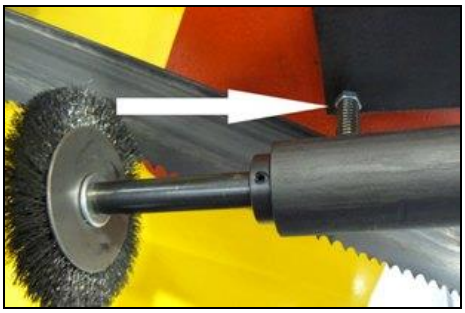

1. Release the fixative screw of the brush. It is possible to move with the brush.
2. Set the brush to the saw band according to the picture.

Attention!
The brush must not touch the bottom of the saw teeth!

3. Tighten the fixative screw.
4. In case, that the brush is not turned right (driving wheel slips on the driving wheels of the saw band), push by means of the screw (see arrow) driving wheel of the brush to the driving wheel of the saw band.

Attention!
The screw must not be tightened with heavy force, because driving wheel of the brush can be damaged or the lifetime of the bearings of the driving wheel of the band can be lowered!

3.5.8. Setting of a cooling method

Required cooling method can be selected using a switch no. 3 on control panel.

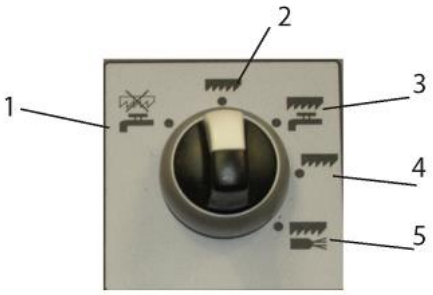

Liquid cooling

1. Coolant pump runs when the drive of the belt is switched off (rinse)
2. Saw band runs without cooling
3. Cooling starts while starting of the drive of the saw band .

Oil mist – Micronizer (optional accessory)

4. Saw band runs without cooling
5. Cooling starts while starting of the drive of the saw band

3.5.9. Halogen lighting of working area (optional accessory)

Light the working area of the machine with natural light and helps to facilitate cutting with a band saw.

Proper lighting in your work area greatly enhances ergonomics machines

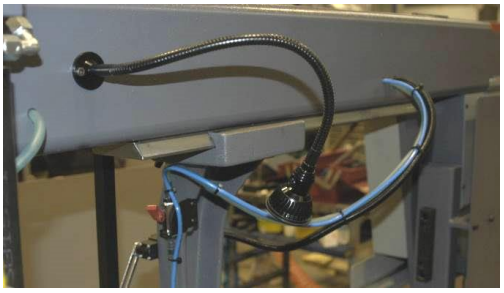

Thanks flexible arm halogen light can accurately adjust to the desired location.

Turn on and off light switch is made directly to the halogen light.

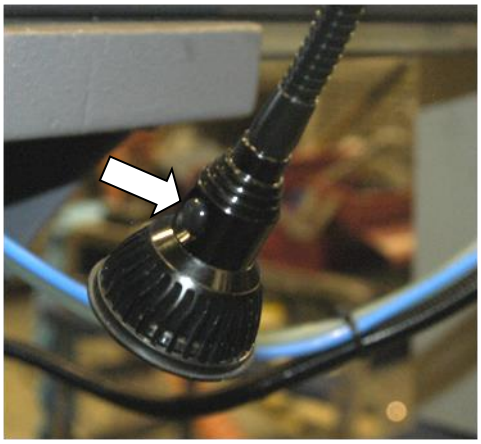

Design lighting unit meets IP54 - Protection against water jets.

Technical data halogen light :

Supply voltage	230 V
Lenght flexible arm	300 mm
average	Ø 5,5 mm
lenght	80 mm

3.6. Material insertion

- Never walk under a suspended load!
- Never climb onto the gravity-roller conveyor!
- Do not hold the material for clamping material to the vice! The vice can cause injury!

3.6.1. Handling agent selection

- Use the strong handling agents to lift and transfer the material!
- Handle with the material only with the lift truck or use the suspension strands and the crane!
- Do not use the lift truck or crane in case that you do not have the license to handle with it!

3.6.2. Insertion

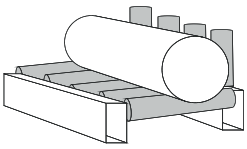

Insert material to the vice and ensure that the material cannot move in the vice or fall from the vice after the clamping. If you cut long pieces of the material (for example rod, tube), you must use the roller conveyors for material shifting to the band saw. Contact Bomar for more information about roller conveyors

Make sure the conveyor is long enough and the material cannot tip off the conveyor.

Be especially careful with round materials that it always stays on two vertical rollers and that it cannot fall off the conveyor!

3.6.3. Bundle material cutting

Attention:
Manual bundle clamping device is not standard equipment. Without this device is a not possible cut bundle.
Attention!
If machine has bundle device then material maximal height is half.

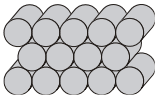

If you want to cut the material in the bundle, there are suggestions for the positioning of bundles

Round material bundle: Take care especially with round material that the bars are put according to the picture. If the bars are put differently, you may have problems with movement.

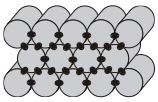

Always weld the material at the rear end of the bundle to secure it from moving.

Before welding always, switch the machine off at the main switch! The magnetic fields, which often occur during welding, may damage the controls!

Attention:
Not all material shapes are suitable for bundle cuts. Keep the recommendation of your supplier of the saw bands for material insertion to the bundle.

4. Údržba stroje / Wartung / Machine service

4.1. Saw band dismantling

During the dismantling, take care that you do not damage the limit switch if the saw band stretching.

1. Lift the saw frame to the top position. Stop the saw frame in top position by control valve.

2. Dismantle yellow protective cover of the saw band. The cover is clamped with two screws.

3. Open the cover of the arm.
4. Turn by stretching star to the left side, release saw band stretching and pull saw band from blade wheels.

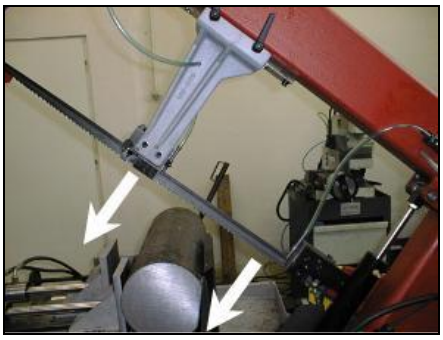

5. Pull up the saw band from the guiding cubes

4.2. Saw band instalation

During the installation, take care that you do not damage the limit switch if the saw band stretching!

1. Prior to installation, clean all track wheels, guide cubes and inner side of the arm thoroughly of all traces of chips and dirt. ***Keep in mind the teeth direction when installing the saw band.***

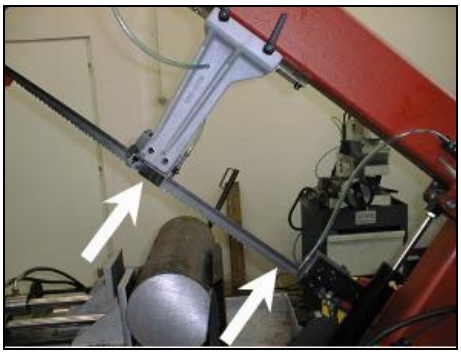

2. Insert new saw band in the guide cubes. Make sure the saw band runs between both guide rollers and it is pushed all the way to the top.

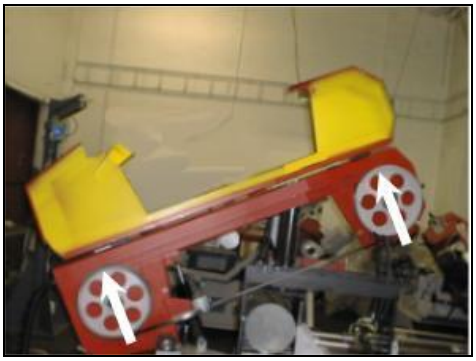

3. Put the saw band on both guide wheels. Make sure that the saw band ridge fits tightly to the wheel rim. Then push the saw band as far back as possible.
4. By turning the stretching star to the right, you will stretch the saw band slightly. Remove the plastic cover of the saw band teeth.
5. Close the cover of the arm.

6. Install the yellow protective cover of the band. The arrow on the cover must match the direction of the arrow on the band. If it does not, you must turn the band round.

4.3. Saw band stretching and inspection

Right saw band stretching is one of the most important criteria's, which influents accuracy and saw band service life. Stretch the saw bands according to the selected saw band and the band saw. Keep the recommendation of your manufacturer.

Pilový pás Sägeband Saw band	Napětí pilového pásu Sägebandspannung Blade tension	Napětí pilového pásu PSI (pro Tenzomat) Sägebandspannung PSI (für Tenzomat) Blade tension PSI (for Tenzomat)
20 x 0,9 mm	160 $N.mm^{-2}$	23 500
27 x 0,9 mm	180 $N.mm^{-2}$	26 500
34 x 1,1 mm	210 $N.mm^{-2}$	30 500
41 x 1,3 mm	240 $N.mm^{-2}$	35 000
54 x 1,3 mm	240 $N.mm^{-2}$	35 000
54 x 1,6 mm	280 $N.mm^{-2}$	40 600
67 x 1,6 mm	290 $N.mm^{-2}$	42 000
80 x 1,6 mm	300 $N.mm^{-2}$	43 500

4.3.1. Mechanical indicator of belt tightening

To facilitate tightening of the belt, a mechanical indicator is installed on the machine by default, enabling the belt to be tightened to the optimum value easily and quickly.

Mechanical indicator of belt tightening

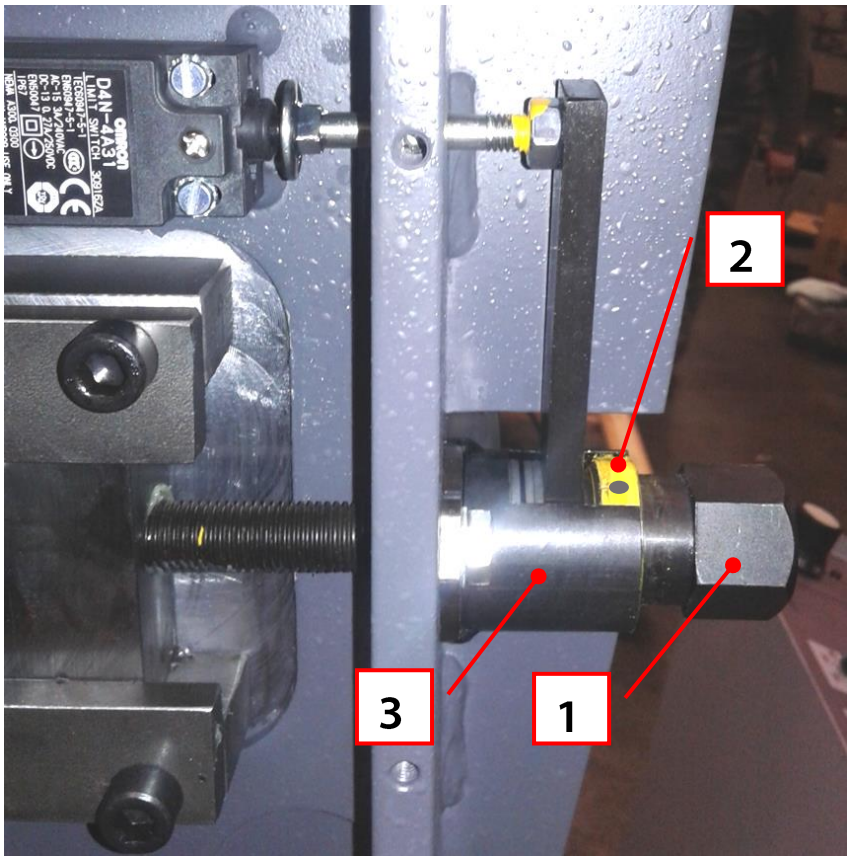

1	Tightening screw
2	Yellow ring – indicator of correct belt tightening
3	Bush

1. **After the belt replacement, the tightening screw (Pos. 1) must be tightened** so that the face of the yellow ring (Pos. 2) be aligned with the face of the bush (Pos.3)

The areas indicated in red in Fig. 1 must be aligned.

Fig.1

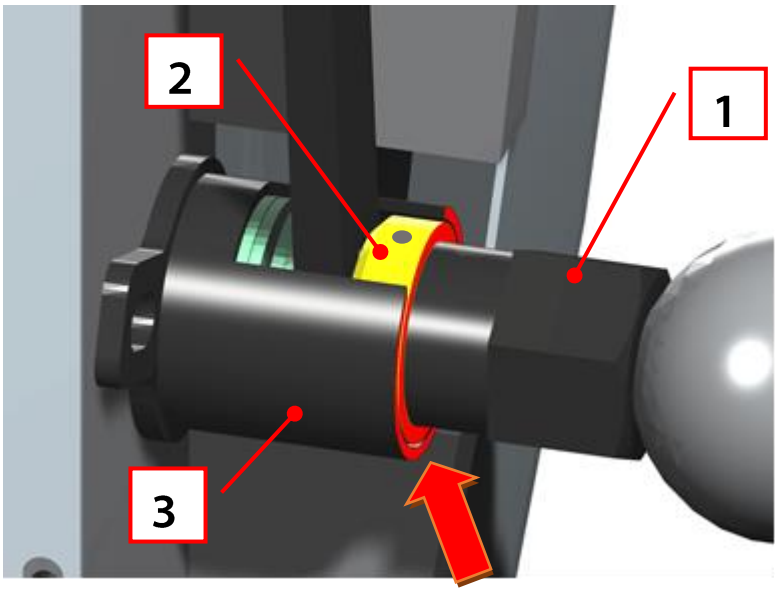

NOTE:

The belt length with deviations within normal tolerances has no influence on the method of the belt tightening indication!

If the belt length deviations fall within normal tolerances and the belt is tightened correctly, the face of the yellow ring (Pos. 2) is always aligned with the face of the bush (Pos. 3), regardless of the real dimension of the belt.

Belts with deviations outside the normal tolerances must not be mounted on the machine!

4.3.2. Hydraulic indicator of belt tightening (optional accessory)

If the machine is equipped with a hydraulic indicator of the belt tightening (optional accessory), the belt tightening value can be seen on the indicator gauge.

The optimum working tightening value of the belt is indicated with a green arrow.

4.4. Adjusting of the limit switch of the saw band stretching

After the saw band is replaced, the saw band stretching must be checked. If the limit switch is not adjusted correctly, the band is stretched too little or too much.

1. Dismantle the protective cover

2. Tighten the saw band on the optimal value using TENZOMAT (see table for TENZOMAT)

- If the drive engine is switched on, but it is not running, turn with the screw clockwise, until the engine begins run..
- If the drive engine is possible switched on, turn with the screw anticlockwise, until the engine is stopped and then turn with the screw clockwise, until the engine begins run.

3. Install the protective cover.

4.4.1. Saw band run adjustment on stretching wheel

Saw band run on the stretching wheel must be regularly inspected. The inspection has to follow every saw band replacement

If the band drive is not set correctly, the following problems may occur:

- The saw band falls off the wheel – the saw band and protective cover can be damaged.
- The saw band runs on the wheel rim – The saw band and wheel rim can be damaged

1. Turn the saw band drive and then again
2. Turn off the main switch!
3. Open the cover and check the saw band run
4. Check the saw band run to the wheels.

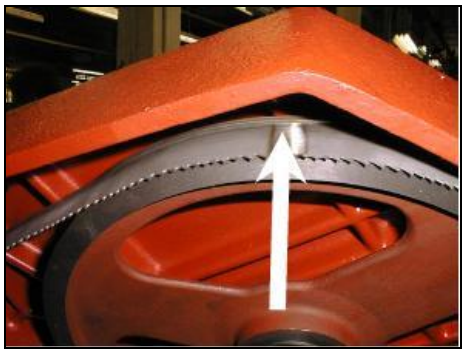

- if the distance between backside of the saw band and the offset wheel is **1 – 3 mm**, setting is right
- if the distance is bigger than **3 mm**, or the saw band is on the offset of the wheel, set the saw band

The saw band runis adjusted with the adjustment screw.

The saw band run is adjusted with an Allen screw in the tension prism of the arm. If the distance of the rear part of the saw band from wheel rim is **1 mm**, setting is right.

- Turn the adjusting screw to the right, then the bandsaw moves closer to the border.
- Turn the screw to the left, then the bandsaw moves further from the border.

After adjustment check the saw band run again.

4.5. Cooling agents and chips disposal

The quality of the cooling agent will deteriorate due to:	If the solution is too weak:	If the solution is too strong:
• use of contaminated water • impurity • outside oil contamination (hydraulics, gears) • high operating temperatures • lack of air circulation • wrong concentration	• corrosion protection is diminished • lubrication decreases • microbial attack is more likely	• the cooling ability is decreased • foam behavior increases • emulsions stability deteriorates • sticky residue develops

4.5.1. Coolant device inspection

The state of the cooling agent has significant influence on the cutting quality and on the operational life of the machine. Lifetime of the cooling liquid is 1 year, after this time we recommend change the cooling liquid. This time is dependent on the degree of pollution cooling liquid (especially with oils) and on the other factors.

Check level of the cooling liquid and function of the pump periodically!

Note:
If the state of the cooling liquid is not satisfactory, the cooling liquid must be changed.

Check the state of the cooling agent according to the following table:

Testing	Interval	Method	Condition	Precaution
Liquid level	daily	visually	too low	after concentration check, refill with water or emulsion
Concentration	daily	refractometer densimeter	too high too low	refill water refill base emulsion
Smell	daily	by sense of smell	unpleasant smell	good ventilation, add biocides or renew coolant
Contamination	daily	by sense of smell	visible oil leaks, sludge fungi	surface cleaning, fix leaks, add biocides or fungicides, or coolant renewal after added system cleanser*
Corrosion-protection	when necessary	visually chip test Herbert-test	insufficient corrosion protection	test stability, if necessary – increase concentration or pH value
Stability	when necessary	refractometer	oiling	add concentrate, enquiries to supplier
Foam reaction	when necessary	shaking test	too much foam, foam disperses too slowly	avoid aeration, increase water hardness, ix with defoamer

* According to manufacturers' instructions

4.5.2. Chips disposal

Chips resulting from cutting operations must be disposed of in accordance with the relevant regulations.

- Let the chips drip excess fluid!.
- Fill a watertight container with the chips! Be careful that the container does not leak, because even after a long dripping time, they still contain coolant residue.
- *Place the container into the care of a disposal company equipped for the disposal of chips contaminated with cooling liquid.* In case the machine is equipped with micro-spray installation, the chips must also be handed over to a disposal company.

4.5.3. Third coolant inflow (optional accessories)

Flexible coolant supply allows to bring the coolant to the desired location.
Third, easily routable and adjustable coolant supply with nozzle ensures sufficient lubrication and cooling of the strip in the middle of the cut material

Particularly suitable for cutting materials with a larger average, where the opening of the guide blocks larger blade and prevents proper lubrication and cooling of the entire length of the cut. For normal cutting off the third coolant inflow may be easily disconnected by closure.

The third coolant inflow get in the package complete package including all jumpers and hoses - just connect to existing cooling divorce
Complete package includes: flexible hose (length 600 mm), shunt valve, inlet plastic hose (depending on the type of machine - min. 1m), interconnection schedule, holderto the machine screws (2xM5), transformer and wiring.

The entire portfolio of BOMAR saws can be extended to a third feed.

4.5.4. Gun cleaning machines from chip (optional accessories)

Tool cleaning machines from chips after cutting.

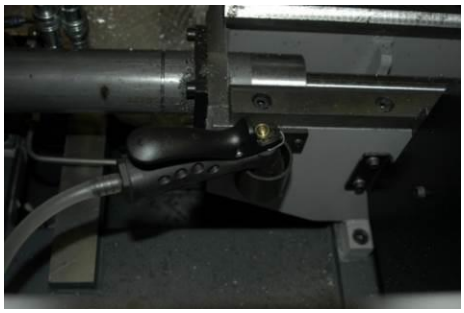

With custom pump (min. capacity 16 l / min.) The coolant gets into the rinsing pistol with the trigger lever.

Sufficient pressure to the chips and debris were eliminated from the bearing surfaces of the base material and the saw.

Gun cleaning machine from the chip is supplied with a sufficient supply hose for easy handling (diameter of 12/8 mm).

Package includes:.

1. Ergonomic handle allows easy handling of the gun during cleaning machine.

2. Brass adjustable nozzle allows for smooth width rinse stream.

3. Valve for setting maximum coolant flow

4. Also included is a convenient holder for postponement gun after useí

Suitable for machine brand Bomar

4.6. Hydraulic, Greases and oils

4.6.1. Gearbox oils

In gearboxes, oil is used for the whole lifetime of the gearbox. We recommend replacing of the filling oil in case of repair.

Use oils with specification DIN 51517 in the gearboxes. Select the viscosity grade ISO VG according to the original oil fill.

Attention:
When replacing, use oils recommended by BOMAR or oils, which has comparable parameters from the other manufacturers.
Do not forget, that mineral and synthetic oils must not be mixed!

Recommended oils and quantity according to the type of the band saw

Band saw	Gearbox oil	Capacity
Proline 420.350 H Proline 420.350 Hsx	Shell Tivela S 320	1,0 l

Comparative table of the gearbox oils

Manufacturer	Viscosity grade		
	ISO VG 100	ISO VG 220	ISO VG 320
BP	Energol GR-XP 100	Energol GR-XP 220	Energol GR-XP 320
Castrol	Alpha SP 100 Alpha MW 100	Alpha SP 220 Alpha MW 220	
Elf	Reductelf SP 100	Reductelf SP 220 Reductelf Synthese 220	Reductelf SP 320
Esso	Spartan EP 100	Spartan EP 220	Spartan EP 320

Manufacturer	Viscosity grade		
	ISO VG 100	ISO VG 220	ISO VG 320
Mobil	Mobilgear 627	Mobilgear SHC 220 Mobilgear 630	Mobilgear 632
ÖMV		PG 220	
Paramo	PP 7	Paramo CLP 220	Paramo CLP 320
Shell	Shell Omala 100	Shell Omala 220 Shell Tivela S 220	Shell Omala 320 Shell Tivela S 320
Total	Carter EP 100	Carter EP 220	Carter EP 320

4.6.2. Lubricant greases

We recommend using lithium based saponified grease, class NGLI-2 for lubrication. Different greases are mixable, if their oil bases and consistence type are identical.

Comparative table of the lubricant greases:

Manufacturer	Type of the lubricant grease
BP	Energrease LS - EP
DEA	Paragon EP1
Esso	FETT EGL 3144
	Beacon EP 1
	Beacon EP 2
FINA	FINA LICAL M12
Klüber	Microlube GB0
	Staburags NBU8EP
	Isoflex Spezial
Optimol	Optimol Longtime PD 0, PD1, PD2
Shell Aseol AG	ASEOL Litea EP 806-077
Texaco	Multifak EP1

4.6.3. Lubrication

There are several placing on the machine, which are necessary to grease periodically. It secures the right function of the machine.

Lubrication place	Lubrication
	The guiding cubes leading – grease with oil from both sides once a week.

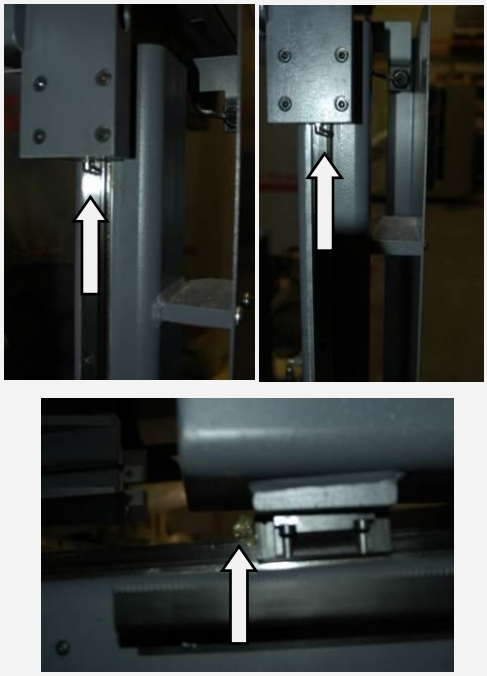

4 x linear carriage for moving the saw arm

Linear guide of the saw arm - every three months. Lubricate with a grease (see Chapter greases). Every carriage of the linear guide grease with about 3-5g of grease. Use for lubrication grease gun. During the lubrication shut down the linear carriage 3 to 5 times back and forth.

4.6.4. Hydraulic oils

Replace the hydraulic oil once in 2 years, because the oil can deteriorate its properties and cause problems the hydraulic equipment. If the hydraulic system is equipped with filter (2SF 56/48-0,063), replace the filter too.

Use oils with specification DIN 51524-HLP, ISO 6743-4 and viscosity grade ISO VG 32 in hydraulic aggregates. Hydraulic oils quantity – see chapter **Hydraulic oil level check**.

Note:
When replacing, use oils recommended by BOMAR or oils, which has comparable parameters from the other manufacturers. Do not forget, that mineral and synthetic oils may not be mixed!

Comparative table of the hydraulic oils

Manufacturer	Type	Manufacturer	Type
Agip	Oso 32	Ina	Hidraol 32 HD
Aral	Vitam GF 32	Klüber	Lamora HLP 32
Avia	Avilub RSL 32	Hungary	Hidrokomol P 32
Benzina	OH-HM 32	Mobil	Mobil DTE 25
BP	Energol HLP 32	ÖMV	HLP 32
Bulgaria	MX-M/32	Poland	Hydrol 30
Castrol	Hyspin AWS 32	Rumania	H 32 EP
Čepro	Mogul HM 32	Russia	IGP 30
DEA	Astron HLP 4hy6	Shell	Tellus Oil 32
Elf	Elfolna 32	Sun	Sunvis 832 WR
Esso	Nuto H 32	Texaco	Rando HD B 32
Fam	HD 5040	Valvoline	Ultramax AW 32
Fina	Hydran 32		

4.6.5. Hydraulic unit service

After 50 hours working time, or the latest 3 months after the first run, the first service should be carried out. This includes:

- checking off all screws and connections, fixing points, tubes and hoses for leakage
- Check hydraulic oil level
- During time of duty the oil temperature shouldn´t exceed 60-70°C
- check function of signaling components (thermometer, level gauge, dirty filter indicator)
- Check the adjustment of working pressure

To realize a high reliability of the power pack, the manufacturer lays down following inspection intervals

Interval	daily	weekly	monthly	three monthly	six monthly	annually
Hydraulic fluid						
Level	-	•	-	-	-	-
Temperature	-	•	-	-	-	-
Condition	-	-	•	-	-	-
Change interval	-	-	-	-	-	•
Filter						
Change interval	-	-	-	-	-	-
Other checks						
External Leakages	•	-	-	-	-	-
Contamination	•	-	-	-	-	-
Damages	•	•	-	-	-	-
Noise-(level)	•	-	-	-	-	-
Gauges	-	-	•	-	-	-

4.7. Machine cleaning

Clean the machine from the cooling liquid and impurities after every shift stopping. Conserve the guiding surfaces, mainly.

- Clamping jaws guiding of the vice.
- The guiding of the feeder.
- Loading surface of the vice.

4.8. Worn pieces replacement

4.8.1. Hard metal guides replacement

If the hard metal guides cannot be adjusted, they have to be replaced.

1. Dismantle the saw band. Remove the hosepipe leading the cooling agent. Dismantle guide cube of the saw band.

2. Loosen the adjusting screws of the metal guide.

3. Loosen the binding screw of first metal guide. Remove adjustable hard metal guide.

4. Loosen the binding screw of second metal guide. Remove the hard metal guide
5. Insert new hard metal guides and fasten them tightly.
6. Mount the saw band. Adjust the hard metal guides.

4.8.2. Round brush replacement

If the chip removing brush is so worn, that it does not fulfill its function, the brush must be replaced.

1. Release the nut of the brush, exchange old brush to new brush and screw on the nut of the brush.

2. Set the brush to the saw band.

4.8.3. Saw band guiding rollers replacement

If the saw band is not sufficiently guided by guiding pulleys or if the pulleys are obviously worn, the pulleys should be replaced.

ATTENTION!
Guiding pulleys must be replaced together on both guiding cubes!!

1. Dismantle the saw band.
1. Disconnect the hose from the cooling agent, screw off the pressure regulation. Let the pressure regulation connected to the hydraulic system. Dismantle the guiding cube of the saw band..

2. Tighten the guiding cube to the vice and dismantle both eccentrics with bearings following way.

ATTENTION!
Mark both eccentrics placing and components on the eccentric! Eccentrics must not be replaced with each other!!

3. Screw off nuts from eccentrics..

4. Remove eccentrics from bearings by means of the swager

5. Change all bearings and other worn parts.

ATTENTION!
Do not replace the eccentrics placing in the cube

6. Install eccentrics to the cubes. Install components on both eccentrics in given order. Put bearings by means of the preparation on eccentrics.

7. Screw on nuts on both eccentrics and tighten them.

8. Insert the saw band to the guiding cube (ca. 15 – 20 cm). Set the eccentrics by means of the wrenches, the saw band must run in the centre. Guide pulleys must not press too much on the band, but must spin freely during the band run.
9. Tighten nuts on both eccentrics.
10. Remove the testing piece of saw band from the cube lead. Install the guiding cube on the machine and connect the pressure regulation to the cut and cooling. Install the saw band.

4.8.4. Stretching wheel replacement

1. Dismantle the saw band.

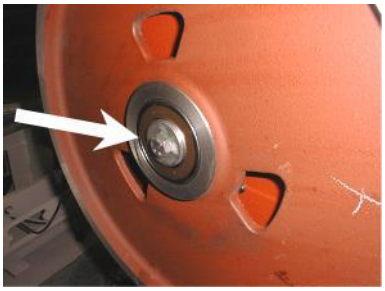

2. Screw off the screw and take down the washer.

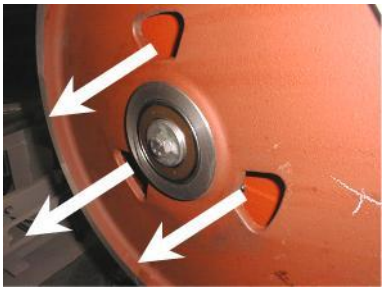

3. Pull off the wheel from the shaft by means of the three-armed puller. If bearing stayed on the shaft, pull off it too
4. Check score of the bearings of the stretching wheel and replace them for new.

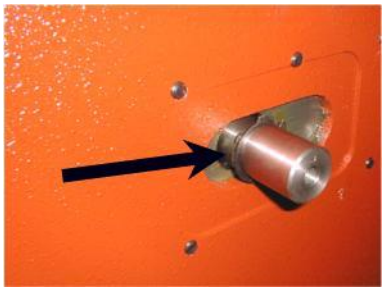

5. Clean the shaft and grease it with oil. Insert retaining ring to the groove.

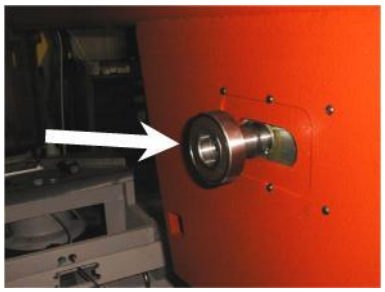

6. Install bearing on the shaft and move it to the retaining ring. Insert the distance ring on the shaft and move it to the bearing.

7. Insert the retaining ring to the hole in the wheel.

8. Insert the bearing to the hole in the wheel and press it to the retaining ring.

9. Put the wheel on the shaft and screw on the preparation to the wheel stretching to the hole in the shaft.

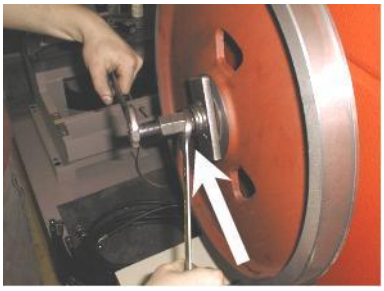

10. Pull on the wheel on the shaft.

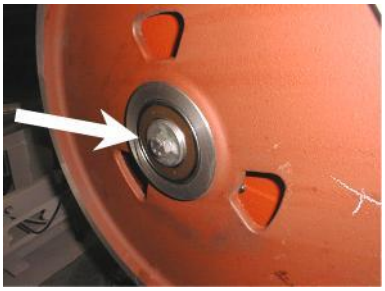

11. Screw on washer and screw back..
12. Install the saw band. Wheel replacement is ready.

4.8.5. Driving wheel replacement

1. Dismantle the saw band

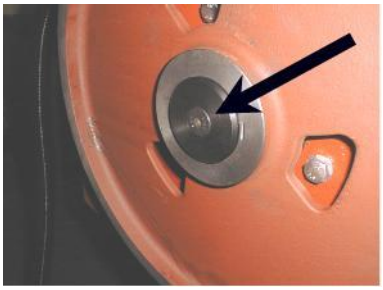

2. Screw off the screw and remove the washer.

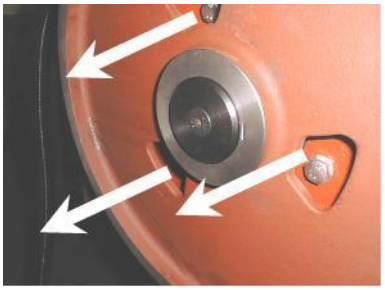

3. Pull off the wheel from the shaft by means of the three-armed puller.

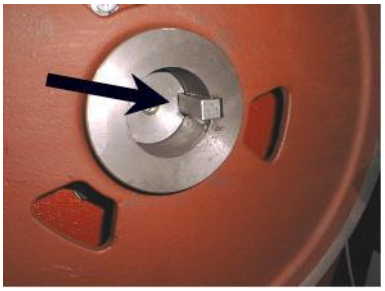

4. Install the wheel on the shaft. Insert the feather to the groove.

5. Screw on the preparation to the wheel stretching to the hole in the shaft. Pull on the wheel on the shaft.

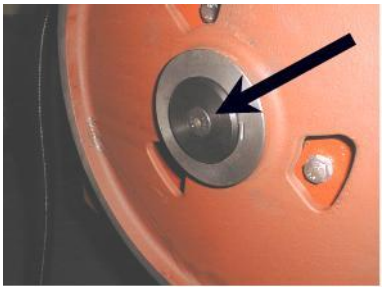

6. Screw on washer and screw back.
7. Install the saw band. Wheel replacement is ready.

4.8.6. Cooling pump replacement

Only a qualified worker can carry out the connection!

High-voltage shock may have fatal results

1. Pull the tank with the liquid from the pedestal..
2. Remove the hosepipe leading to the cooling agent from the plug on the pump. Screw off four screws from the cooling pump flange and pull out the pump from the sheet metal holder.

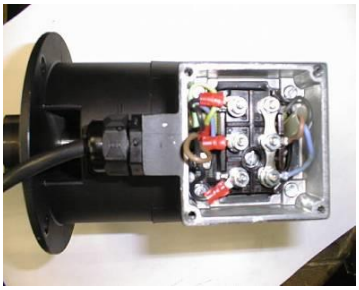

3. Remove the cover of the pump terminal switchboard. Disconnect 4 terminal connectors of the input cables. Cables are identified according to the red clamps..

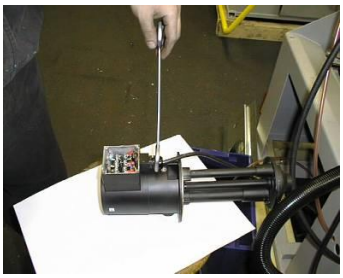

4. Loosen the bushing and pull the cable out from the pump.

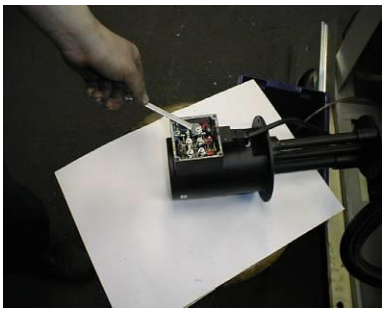

5. Dismantle new pump switchboard cover. Push the cable through the bushing and fasten it.

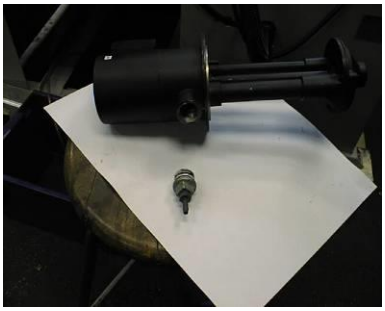

6. Screw on the cable bushing and cover of the terminal block. Do not forget the rubber gasket! Tighten the cooling liquid hose with non-stick tape and screw it again. Install cooling liquid hose, place the pump on the sheet metal holder and screw it

5. Závady / Störungen / Troubleshooting

5.1. Mechanical problems

Problem	Possible causes	Repair
1. Slanting cut	- Wrongly adjusted hard metal guides.	Set according to the chapter „Servicing and adjustment“
	- Worn hard metal guides.	Replace to the chapter „Worn pieces replacement“
	- Wrongly adjusted cubes of the saw band guiding.	Set according to the chapter „Servicing and adjustment“
	- Worn bearings of the saw band guiding.	Replace according to the chapter „Worn pieces replacement“
	- Wrongly adjusted swarf brush.	Set according to the chapter „Servicing and adjustment“
	- Worn swarf brush.	Replace according to the chapter „Worn pieces replacement“
	- Insufficient saw band stretching.	Rise the saw band stretching and set the limit switch.
	- Wrongly chosen tooth system of the saw band.	Replace the saw band and keep the instructions of manufacturer on new saw band choice.
	- Worn saw band.	Replace the saw band.
	- Wrongly balanced roller conveyor.	Set the roller conveyor.
	- Dirty feeding board.	Cleanse the feeding board from debris, chip and residue material.
	- Guiding arm and guiding cube are loosened.	Clamp the guiding arm.
	- Guiding arm and cube are too far from the material.	Set the guiding cube to the material.
	- Too fast cutting rate.	Lower the material feeding speed.
	- Unexpected oscillation in material quality.	Set the cut and feeding speed to the relevant material.
2. The cut is not cut upon desired angle	- Securing lever is loosened.	Check the securing lever efficiency and carry out its adjustment according to chapter „Servicing and adjustment“.
	- Set angle does not match the cut angle.	Check the angle adjustment with a protractor and possibly set it according to chapter „Servicing and adjustment“.
	- Insufficient saw band stretching.	Stretch the saw band and set the limit switch according to chapter „Servicing and adjustment“.
	- Guiding arm and guiding cube are loosened.	Fasten the guiding arm and the cube.
	- Dirt between material and clamping jaw.	Cleanse the material and mating jaw.
3. Short lifetime of the saw band	- Insufficient saw band stretching.	Raise the tightening of the saw band set the scanner of saw band tightening according to chapter „Servicing and adjustment“.
	- Worn swarf brush.	Check the swarf brush condition and replace it in case of excessive use as described in chapter „Worn pieces replacement“
	- Wrongly adjusted swarf brush.	Check swarf brush adjustment, set it according to chapter „Servicing and adjustment“
	- Over stretched saw band	Lower stretching of the saw band and set the limit switch of the saw band stretching according to chapter „Servicing and adjustment“
	- Wrongly adjusted hard metal guides.	Check the adjustment of the hard metal guides and carry out adjustment as described in chapter „Servicing and adjustment“
	- Worn hard metal guides of the saw	Check the condition of the hard metal guide and

Problem	Possible causes	Repair
	band.	if it is too worn, replace hard metal guides according to chapter „Worn pieces replacement“
	- Worn saw band guide bearings.	Check guiding bearings and if you notice some sort of excessive damage, replace them according to chapter„Worn pieces replacement“
	- Wrongly adjusted guiding cubes of the saw band.	Set guiding cube according to chapter „Servicing and adjustment“
	- Wrongly adjusted down feed and saw band speed.	Adjust the feeding and speed of a saw band according to values published by saw band manufacturer.
	- Different material quality.	Adjust feeding and speed of a saw band according to desired material (try cut-test).
	- Low-class saw band	Replace the saw band (contact your local accessory supplier for more information)
	- Wrongly chosen saw band tooth system.	Replace the saw band and keep instructions of the manufacturer on the choice.
	- Wrongly adjusted tracking.	Check the space between top of a saw band and driving wheel. Perhaps adjust the tracking as described in chapter „Servicing and adjustment“
4. Insufficient cut output.	- Worn saw band.	Replace the saw band and keep instructions of the manufacturer on the choice.
	- Wrong saw band tooth system.	Replace the saw band and keep instructions of the manufacturer on the choice.
	- Wrongly set down feed and speed of a saw band.	Set feed and speed of a saw band according to values published by saw band manufacturer.
5. The cut is not finished.	- Wrongly adjusted lower stop point of the saw frame.	Check lower limit switch and screw.
	- Stop point surface is messed-up.	Cleanse stop point surface of the limit switch from debris and residue material.
6. By choke is not possible turn	- Metal clamps between valve and panel.	Clamps must be removed and put on the shaft O-Ring about 10x2 mm.
	- Metal clams are in body of valve.	Valve must be cleared or changed.
7. Saw band drive cannot be started.	- Pressure switch is adjusted wrong.	Set the pressure switch according to chapter „Servicing and adjustment“
	- Pressure switch is defective.	Replace defective parts of the pressure switch.
8. The saw bands are cracked.	- In stretching wheel is wrong adjusting geometry.	Adjust distance band from recess wheel c.2 mm according to operating instructions.
	- Hard metal plates of circuit saw band are not adjusting.	Hard metal plates of circuit saw band must be adjusting according to operating instructions.
	- Guiding cubes are not adjusting (bearings + hard metal circuit)	Guiding cubes must be adjusting (bearings + hard metal circuit) according to operating instructions.
	- Bearings of guiding cubes are used (rolling elements are damaged or outside ring of bearing has conical form).	Bearings of guiding cubes must be replaced. Bearings must be adjusting according to operating instructions.
9. Damage tooth system of the saw band	- In gripping the lifting cylinder is backlash.	
	- Squeezed pin upper or downer holder of the lifting cylinder.	Exchange complete upper or downer holder of lifting cylinder.
10. The saw is cut downing.	- Geometry of hardmetal guiding cubes is wrong adjusted.	Hardmetal guiding cubes must be adjusted.
	- Bearings of guiding cubes are used.	Bearings of guiding cubes must be replaced.
11. Cleansing of the saw band is not functional.	- Elastic wheel of the brush drive is worn-down.	Elastic wheel of the brush must be changed.

Problem	Possible causes	Repair
	- Knurling of the driving wheel is worn-down.	Driving wheel must be changed.
	- The shaft of the brush drive is rusted.	The shaft of the brush must be cleaned and oiled.
	- The brush position and the brush cover is adjusted wrong – with the brush cannot be turned.	The brush cover must be posed, in order to the brush can be turned.
12. The saw arm periodically rise and fall during the cut; this cause short lifetime of the saw band.	- Backslash in driving wheel lodgement on the shaft.	Change the driving shaft for a long one, new bearings, distance ring, new driving wheel, spring, two covers on the forehead of the shaft + screws.
	- Worn channel for spring.	

5.2. Electric and hydraulic problems

Problem	Possible causes	Repair
1. Machine is not possible start.	- In socket is not voltage	Line voltage must be checked.
	- Transfer relay is closed (thermal protector)	Each FA relay must be checked.
	- Limit switch of saw band stretching, cover of frame or cover of saw band is not started.	Check of saw band stretching and covers closing.
2. When cut is finished, the frame is not raising.	- Bottom limit switch is adjusted wrong.	Bottom limit switch must be adjusted according to chapter ADJUSTING.
	- In hydraulic (pneumatic) ring is error. HYTOS (BOSCH) is not acting to frame uplift.	Function of magnetic valve must be checked, valve must be closed, voltage of clamps and inductor must be checked.
3. Electric motor and pump are without voltage. Between contactor and thermal protector is not voltage.	- Wrong contactor.	Replace contactor of engine.
4. The indicator of speed saw band is not functional.	- Sensor of speed is not adjusted.	Sensor of speed must be adjusted.
	- Defective display	The display must be changed.
	- Wrong sensor – diode of indicator speed is not light.	Sensor must be changed and adjusted.
5. Protector is switched off from engine hydraulic aggregate MA3 sometimes.	- Into hydraulic system is high working pressure.	Service engineer must reduce the pressure in hydraulic system.
6. The hydraulic aggregate cannot be started	Auxiliary contact on thermo-relay FA1 is defective.	Replace the defective contact on motor starter FA1.
7. Hydraulic aggregate is switched on but the saw arm or the main vice is not functional	- Wrong connection of electrical supply. The electrical phases are connected conversely.	The phases must be switched. Only service engineer can do this.
8. Cooling is not active	Lack of cooling agent.	Fill the tank with cooling agent.
	- Thermal relay is defective	Change the thermal relay
	- Input hosepipe is broken or obstructed.	Check the cooling circuit and perhaps cleanse

Problem	Possible causes	Repair
		cooling system.
	- Cooling pump protection is defective	Check the protection of cooling pump if need change it.
	- Cooling pump is defective.	Replace the cooling pump.

5.3. Hydraulic problems

Problem	Possible causes	Repair
1. Hydrogenerator not supplying oil	• reverse rotation	Check the connections of each phase. Reconnect properly connection of the electrical phases.
	• shortage of oil in the tank	Add hydraulic oil
	• Oil viscosity does not correspond prescribed viscosity value	Change hydraulic oil.
	• Hydrogenerator malfunction	Call service
	• Wrong power supply connection.	Check the connections of each phase. Reconnect properly connection of the electrical phases.
2. Hydraulic oil contains bubbles	• Hydraulic circuit is not adequately deaerated	Make deaeration of hydraulic circuit.
	• Low oil level	Add hydraulic oil
	• the pump shaft seals damaged	Call service
3. Increased mechanical noise	• damaged joint drive	Call service
	• damaged or destroyed motor bearings	Call service
	• air intake	Check for leaks.
4. Low pressure, pump supplies oil	• problem in the safety valve	Wrong settings. Check the settings and adjust the safety valve.
	• pump wear	Call service
	• external or internal leakage	Call service
5. Hydrogenerator is seized	• damage by solid particles in oil	Make oil filtration, or call the service.
	• non-prescribed oil	Change hydraulic oil.
	• wrong type of oil	Change hydraulic oil.
	• exceeding the life of the pump	Call service

6. Overheating oil	•	cooler malfunction	Check the cooler function or call service.
	•	wear the pump, the energy is converted into heat	Call service
7. Hydraulic valve can not be readjusted	•	electromagnet has no signal (voltage) - interrupted supply lines	Check again.
	•	Electromagnet coil burnt	Replace coil – Call service.
	•	spool valve sticking	Replace valve – Call service

6. Schémata / Schemas / Schematics

6.1. Elektrické schéma / Elektroschema / Wiring diagrams – Proline 420.350 H

6.1.1. 3×400 V + PE, 50 Hz

Obsah / Table of contents / Inhalt

Strana Page Seite	Název strany Page name Seitenname	Datum Date Datum
/1	Úvodní strana / Start page / Startseite	18.01.2022
/2	Obsah / Table of contents / Inhaltsverzeichnis	10.02.2022
/3	Kusovník artiklů / Parts list / Artikelstückliste	18.01.2022
/3.a	Kusovník artiklů / Parts list / Artikelstückliste	18.01.2022
/3.b	Kusovník artiklů / Parts list / Artikelstückliste	18.01.2022
/3.c	Kusovník artiklů / Parts list / Artikelstückliste	10.02.2022
/3.d	Kusovník artiklů / Parts list / Artikelstückliste	10.02.2022
/3.e	Kusovník artiklů / Parts list / Artikelstückliste	10.02.2022
/3.f	Kusovník artiklů / Parts list / Artikelstückliste	10.02.2022
/3.g	Kusovník artiklů / Parts list / Artikelstückliste	10.02.2022
/4	Ovládací panel OP1 / Control panel OP1 / Bedienpult OP1	18.01.2022
/5	Rozmístění hydraulických ventilů / Placement of Hydraulic valves / Platzierung die Hydroventile	08.06.2021
/6	Rozmístění prvků v rozvaděči R1 / Placement of elements in enclosure R1 / Platzierung der Elemente im Schaltschrank R1	18.01.2022
/7	Silová část M1 / Power part M1 / Feld partie M1	10.02.2022
/8	Silová část M2,M3 / Power part M2,M3 / Feld partie M2,M3	18.01.2022
/9	Silová část M4, M5 / Power part M4, M5 / Feld partie M4, M5	10.02.2022
/10	Řidicí systém / Control system / Steuersystem	10.02.2022
/11	Tlačítka ovládací panel OP1 / Button control panel OP1 / Taste Bedienpult OP1	18.01.2022
/12	Vstupy / Inputs / Eingänge	10.02.2022
/13	Hydraulické ventily / Hydraulic valves / Hydroventile	19.01.2022
/14	Stykače motorů / Motor contactors / Motor-Schutzschalter	18.01.2022
/15	Bezpečnostní okruh / Safety circle / Sicherheitsbereich	18.01.2022
/16	Snímač výšky ramene / Sawframe position sensor / Rahmenposition sensor	18.01.2022
/17	Příslušenství / Accessories / Zubehör	19.01.2022
/18	SyncFree / SyncFree / SyncFree	18.01.2022

Kusovník artiklů / Parts list / Stückliste

Označení přístroje Device identification Geräteidentifikation	Typ přístroje Device description Gerätebeschreibung	Objednací číslo Type number Typennummer	Výrobce Manufacturer Hersteller	Skladové číslo Part number Lagernummer	Množství Quantity Menge	Umístění Location Stelle
-BM1	Bezpečnostní relé 24VDC, 3NO/1NC Safety relay 24VDC, 3NO/1NC Sicherheitsrelais 24VDC, 3NO/1NC	ABB.2TLA010040R0000	ABB	91.051.076	1	/15.5
-FA2	Pomocné kontakty - 1xNO+1xNC Auxiliary contacts - 1xNO+1xNC Hilfskontakte - 1xNO+1xNC	HKF1-11	ABB	91.046.002	1	/8.2
-FA3	Pomocné kontakty - 1xNO+1xNC Auxiliary contacts - 1xNO+1xNC Hilfskontakte - 1xNO+1xNC	HKF1-11	ABB	91.046.002	1	/8.6
-SN10.4	Indukční snímač vzdálenosti Inductive proximity sensor Induktive Näherungssensor	BAW R06AC-UAF20B-EP03	BALLUFF	91.172.016	1	/17.6
-A10.4	Odchylka pásu Band deviation Bandabweichung	BDM2	BOMAR s.r.o.	266.254	1	/17.2
-SN1	Snímač výšky ramene Arm height sensor Arm Höhensensor	DHB	BOMAR s.r.o.	251.232	1	/16.4
-TR1	Držák Holder Inhaber	30.6030-413	BOMAR s.r.o.	30.6030-413	1	/7.6
-HL1	Signálka LED červená na adaptér Red LED light for adapter Red LED-Licht für Adapter	M22-LED-R	EATON	91.061.027	1	/14.1
-KM2A	Stykač - 4kW/400V, 3P Contactor - 4kW/400V, 3P Schütz - 4 kW / 400V, 3P	AF09-30-01-11	ABB	91.040.047	1	/14.5
-KM2A	Mechanické blokování Mechanical interlock unit Mechanische Interlockeinheit	VM4	ABB	91.041.045	1	/14.5
-KM2B	Stykač - 4kW/400V, 3P Contactor - 4kW/400V, 3P Schütz - 4 kW / 400V, 3P	AF09-30-01-11	ABB	91.040.047	1	/14.7
-KM2B	Pomocný kontakt - 1xNO Auxiliary contact - 1xNO Hilfskontakt - 1xNO	CA4-10	ABB	91.041.044	2	/14.7

The manufacturer reserves right to use an equivalent replacement device.

2

Kusovník artiklů / Parts list / Stückliste

Označení přístroje Device identification Geräteidentifikation	Typ přístroje Device description Gerätebeschreibung	Objednací číslo Type number Typennummer	Výrobce Manufacturer Hersteller	Skladové číslo Part number Lagernummer	Množství Quantity Menge	Umístění Location Stelle
-SA1	Hlavice s otočným přepínačem - 4 polohy Head with rotary switch - 4 positions Kopf mit Drehschalter - 4 Positionen	M22 - WRK4	EATON	91.060.087	1	/11.7
-FU1	Pojistka trubičková - 4A/250V, pomalá, 5x20 Tube fuse - 4A/250V, slow, 5x20 Rohrsicherung - 4A / 250V, langsam, 5x20	T4A/250V	ESKA	91.230.015	1	/7.8
-FU5	Pojistka trubičková - 500mA/250V, pomalá, 5x20 Tube fuse - 500mA/250V, slow, 5x20 Rohrsicherung - 500 mA / 250 V, langsam, 5x20	T500mA/250V	ESKA	91.230.011	1	/17.9
-RP1	Potenciometr 4k7 Potenciometer 4k7 Potentiometer 4k7	TP195 4k7/N20A	Elektronické součástky CZ, a.s	91.283.015	1	/9.5
-RP1	Hlavice potenciometru - 24mm Head of potentiometer 24mm Leiter Potentiometer 24mm	S8877 BLK	GES-ELECTRONICS, a.s.	91.060.063	1	/9.5
-HA1	Laser Laser Laser	Laser 24AC/DC	HOFMAN SYSTEMS s.r.o.	91.100.109	1	/17.1
-RCF1	Filtr RFC vývodový Efferent RFC filter Ableitenden RFC Filter	FBOPR1624	Ing. Miroslav Vlček	91.041.015	1	/7.3
-RCF2A	Filtr RFC vývodový Efferent RFC filter Ableitenden RFC Filter	FBOPR1624	Ing. Miroslav Vlček	91.041.015	1	/8.1
-RCF3	Filtr RFC vývodový Efferent RFC filter Ableitenden RFC Filter	FBOPR1624	Ing. Miroslav Vlček	91.041.015	1	/8.7
-RCF6B	Filtr RFC vývodový Efferent RFC filter Ableitenden RFC Filter	FBOPR1624	Ing. Miroslav Vlček	91.041.015	1	/8.4
-RCF11	Filtr RFC vývodový Efferent RFC filter Ableitenden RFC Filter	FBOPR1624	Ing. Miroslav Vlček	91.041.015	1	/7.6
-RCF12	Filtr RFC vývodový Efferent RFC filter Ableitenden RFC Filter	FBOPR1624	Ing. Miroslav Vlček	91.041.015	1	/7.7

The manufacturer reserves right to use an equivalent replacement device.

3

BOMAR, s.r.o. Těžební 1236/1 CZ 627 00, Brno	Stroj/Machine/Maschine: Proline 420.350 H	Název stránky/Name page/Name seiten: Kusovník artiklů / Parts list / Artikelstückliste	Číslo dok./Doc.No/Anzahl der Dokumente.:	ES-101.335-B1/B2-V5.2	List/Page/Seite: 3.a
			Napájení/Power supply/Einspeinsung:	3x400V+PE, 50Hz	Listů/Pages/Seiten: 25
			Zpracoval/Processed /Hat verarbeitet:		
			Datum/Date/Datum:	18.01.2022	

Kusovník artiklů / Parts list / Stückliste

Označení přístroje Device identification Geräteidentifikation	Typ přístroje Device description Gerätebeschreibung	Objednací číslo Type number Typennummer	Výrobce Manufacturer Hersteller	Skladové číslo Part number Lagernummer	Množství Quantity Menge	Umístění Location Stelle
-+R2	Kleštinová vývodka Cable gland Kabelverschraubung	AG-1545.12.06	Schmachtl CZ s.r.o.	91.070.010	2	/16.4
-+R2	Matice černá Nut black Nuss schwarz	AG8245.12	Schmachtl CZ s.r.o.	91.072.010	2	/16.4
-+R10.4	Kleštinová vývodka Cable gland Kabelverschraubung	AG-1545.12.06	Schmachtl CZ s.r.o.	91.070.010	2	/17.6
-+R10.4	Matice černá Nut black Nuss schwarz	AG8245.12	Schmachtl CZ s.r.o.	91.072.010	2	/17.6
-FA1	Tepelné relé - 0.31A Thermal relay - 0.31A Thermische Relais - 0.31A	T16-0,31	ABB	91.050.020	1	/7.4
-FA2	Motorový spouštěč - 2.5A Motor starter - 2.5A Motorstarter - 2.5A	MS116-2,5	ABB	91.045.021	1	/8.2
-FA3	Motorový spouštěč - 1A Motor starter - 1A Motorstarter - 1A	MS116-1,00	ABB	91.045.019	1	/8.6
-FU4	Pojistka trubičková - 200mA/250V, pomalá, 5x20 Tube fuse - 200mA/250V, slow, 5x20 Rohrsicherung - 160mA / 250V, langsam, 5x20	T200mA/250V	ESKA	91.230.037	1	/17.1
-FU4	Svorka pojistková Fuse terminal Sicherungsklemme	WK4/THSi5U	WIELAND	91.251.102	1	/17.1
-FU5	Svorka pojistková Fuse terminal Sicherungsklemme	WK4/THSi5U	WIELAND	91.251.102	1	/17.9
-H10.4	Maják - základna Lighthouse - Base Leuchtturm - Basis	SL7-CB-100	EATON	91.063.058	1	/17.3
-H10.4	Maják - žlutý Lighthouse - yellow Leuchtturm - gelb	SL7-L-Y	EATON	91.063.059	1	/17.3

The manufacturer reserves right to use an equivalent replacement device.

Kusovník artiklů / Parts list / Stückliste

Označení přístroje Device identification Geräteidentifikation	Typ přístroje Device description Gerätebeschreibung	Objednací číslo Type number Typennummer	Výrobce Manufacturer Hersteller	Skladové číslo Part number Lagernummer	Množství Quantity Menge	Umístění Location Stelle
-H10.4	Žárovka 24V Lamp 24V Lampe 24V	SL7-L24	EATON	91.063.061	1	/17.3
-KM1	Ministýkač 4kW/400V Minicontactor 4kW/400V Minischutz 4kW/400V	B6S-30-01-1.7-71	ABB	91.040.049	1	/14.2
-KM2A	Pomocný kontakt - 1xNC Auxiliary contact - 1xNC Hilfskontakt - 1 xNC	CA4-01	ABB	91.041.043	1	/14.5
-KM2B	Pomocný kontakt - 1xNC Auxiliary contact - 1xNC Hilfskontakt - 1 xNC	CA4-01	ABB	91.041.043	1	/14.7
-KM3	Ministýkač 4kW/400V Minicontactor 4kW/400V Minischutz 4kW/400V	B6S-30-01-1.7-71	ABB	91.040.049	1	/14.3
-KM11	Stýkač 5,5kW/400V Contactor 5,5kW/400V Schütz 5,5kW/400V	AF12-30-01-11	ABB	91.040.051	1	/15.7
-KM11	Pomocný kontakt - 1xNO Auxiliary contact - 1xNO Hilfskontakt - 1xNO	CA4-10	ABB	91.041.044	1	/15.7
-KM12	Stýkač 5,5kW/400V Contactor 5,5kW/400V Schütz 5,5kW/400V	AF12-30-01-11	ABB	91.040.051	1	/15.8
-KM12	Pomocný kontakt - 1xNO Auxiliary contact - 1xNO Hilfskontakt - 1xNO	CA4-10	ABB	91.041.044	1	/15.8
-PA2	Pojistkový odpojovač E-90 - 2P Fuse disconnector E-90 - 2P Sicherungstrenner E90 - 2P	E 92/32	ABB	91.241.013	1	/7.5
-QS1	3 pólový odpínač, 25A Disconnector - 3P, 25A Trennschalter - 3P, 25A	OT25FT3	ABB	91.170.016	2	/7.2
-QS1	Rukojeť odpínače - černá Handle switch - black Griffschalter - schwarz	OHBS2RJ	ABB	91.180.015	1	/7.2

The manufacturer reserves right to use an equivalent replacement device.

3.b

Kusovník artiklů / Parts list / Stückliste

Označení přístroje Device identification Geräteidentifikation	Typ přístroje Device description Gerätebeschreibung	Objednací číslo Type number Typennummer	Výrobce Manufacturer Hersteller	Skladové číslo Part number Lagernummer	Množství Quantity Menge	Umístění Location Stelle
-RE1	Ministýkač 4kW/400V Minicontactor 4kW/400V Minischutz 4kW/400V	B6S-30-01-1.7-71	ABB	91.040.049	1	/14.8
-RP1	Svorka rychloupínací Fastconnect clamp Fast Connect Klemm	WAGO 224-112	WAGO	91.250.009	3	/9.5
-SA1	Upevňovací adaptér + 1NO Attaching adapter + 1NO Montageadapter + 1NO	M22-AK10	EATON	91.061.021	1	/11.7
-SA1	Kontaktní blok - 1NO; na panel Contact block - 1NO; on the panel Kontaktblock - 1NO; auf dem panel	M22-K10	EATON	91.061.022	2	/11.7
-SA1	Upevňovací adaptér Mounting adapter Montageadapter	M22-A4	EATON	91.061.045	1	/11.7
-SB1	Hlavice dvoutlačítka bílá/černá start/stop Double button head white/black start/stop Doppelrundkopf weiß/schwarz Start/Stopp	M22-DDL-WS-GB1/GB0	EATON	91.060.034	1	/11.1
-SB1	Upevňovací adaptér + 1NO Attaching adapter + 1NO Montageadapter + 1NO	M22-AK10	EATON	91.061.021	1	/11.1
-SB2	Kontaktní blok - 1NO; na panel Contact block - 1NO; on the panel Kontaktblock - 1NO; auf dem panel	M22-K10	EATON	91.061.022	1	/11.2
-SB3	Hlavice dvoutlačítka bílá/černá, zavřít/otevřít Double button head white/black, arrow close/open Doppelrundkopf weiß / schwarz, Pfeil Schließen / Öffnen	M22-DDL-WS-*	EATON	91.060.055	1	/11.2
-SB3	Upevňovací adaptér + 1NO Attaching adapter + 1NO Montageadapter + 1NO	M22-AK10	EATON	91.061.021	1	/11.2
-SB4	Kontaktní blok - 1NO; na panel Contact block - 1NO; on the panel Kontaktblock - 1NO; auf dem panel	M22-K10	EATON	91.061.022	1	/11.3
-SB5	Hlavice dvoutlačítka bílá/černá šipka nahoru/dolů Double button head white/black, arrow up/down Doppelrundkopf weiß / schwarz, Pfeil nach oben / unten	M22-DDL-WS-*-*	EATON	91.060.054	1	/11.4

The manufacturer reserves right to use an equivalent replacement device.

3.c

Kusovník artiklů / Parts list / Stückliste

Označení přístroje Device identification Geräteidentifikation	Typ přístroje Device description Gerätebeschreibung	Objednací číslo Type number Typennummer	Výrobce Manufacturer Hersteller	Skladové číslo Part number Lagernummer	Množství Quantity Menge	Umístění Location Stelle
-SB5	Upevňovací adaptér + 1NO Attaching adapter + 1NO Montageadapter + 1NO	M22-AK10	EATON	91.061.021	1	/11.4
-SB6	Kontaktní blok - 1NO; na panel Contact block - 1NO; on the panel Kontaktblock - 1NO; auf dem panel	M22-K10	EATON	91.061.022	1	/11.5
-SB7	Upevňovací adaptér + 1NO Attaching adapter + 1NO Montageadapter + 1NO	M22-AK10	EATON	91.061.021	2	/15.6;/17.1
-SB7	Hlavice prosvětleného tlačítka modrá Blue transparent switch Blau transparent Schalter	M22-DL-B	EATON	91.060.132	1	/15.6
-SB7	Přepínač 2 polohy Switch 2 positions Schalter 2 Positionen	M22 - WKV	EATON	91.060.037	1	/17.1
-SB7	Nosič štítků Moeller Moeller label holder Moeller Etikettenhalter	M22S-ST-X	EATON	91.062.009	1	/17.1
-SB501	Total stop - hlavice + 3xNC Emergency-stop mushroom push - button + 3xNC Not-Aus-Pilz - Taster + 3 xNC	YW1B-V4E02R	IDEC	91.060.084	1	/15.4
-SB501	Kontakt - 1x NC Contact - 1x NC Kontakt - 1x NC	YW-E01	IDEC	91.061.054	1	/15.4
-TR1	Toroidní transformátor - 400V/230V/20V 4,5A 90VA Toroidal transformer - 400V / 230V / 20V 4,5A 90VA Ringkerntransformator - 400V / 230V / 20V 4,5A 90VA	400V/230V/20V 4,5A 90VA	KARBAN s.r.o.	91.080.023	1	/7.6
-SQ21	Bezpečnostní koncový spínač - 2xNC Safety Limit Switch - 2x NC Sicherheitsendschalter - 2x NC	QKS8	KEDU	91.173.012	1	/15.4
-PA1	Pojistka válcová - 12A, 10x38, rychlá Tube fuse - 12A, 10x38, fast Rohrsicherung - 12A, 10x38, schnell	PV10 12A gG	OEZ	91.231.007	2	/9.1
-PA2	Pojistka válcová - 2A, 10x38, pomalá Tube fuse - 2A, 10x38, slow Rohrsicherung - 2A, 10x38, langsam	PV10 2A gG	OEZ	91.230.034	2	/7.5

The manufacturer reserves right to use an equivalent replacement device.

3.d

Kusovník artiklů / Parts list / Stückliste

Označení přístroje Device identification Geräteidentifikation	Typ přístroje Device description Gerätebeschreibung	Objednací číslo Type number Typennummer	Výrobce Manufacturer Hersteller	Skladové číslo Part number Lagernummer	Množství Quantity Menge	Umístění Location Stelle
-SQ4	Koncový spínač - 1NC+1NO Limit switch - 1NC+1NO Endschalter - 1NC+1NO	D4N-4A31	OMRON	91.173.007	1	/12.7
-SQ1	Koncový spínač - 1NO + 1NC, kladka, pomalá akce Limit switch - 1NO + 1NC, pulley, slow action Endschalter - 1NO + 1NC, rolle, langsame Einwirkung	FR 605-M2	PIZZATO	91.173.009	1	/12.3
-SQ2	Koncový spínač - 1NO + 1NC, kladka, pomalá akce Limit switch - 1NO + 1NC, pulley, slow action Endschalter - 1NO + 1NC, rolle, langsame Einwirkung	FR 615-M2	PIZZATO	91.173.044	1	/12.4
-SQ3	Koncový spínač - 1NO + 1NC, dlouhá nastavitelná kladka, M2, snap action Limit switch - 1NO + 1NC, long adjustable pulley, M2, snap action Endschalter - 1NO + 1NC, lange verstellbare rolle, M2, schnapp	FR 655-M2	PIZZATO	91.173.045	1	/12.6
-FM1	Frekvenční měnič - 3.7kW, 3x400VAC Frequency converter - 3.7kW, 3x400VAC Frequenzumrichter - 3.7kW, 3x400VAC	VFD9A0ME43AFNAA	DELTA ELECTRONICS, INC.	91.012.191	1	/9.1
-M1	Čerpadlo chlazení 120W Cooling pump 120W Kühlpumpe 120W	PA70/120	SAP srl	91.020.032	1	/7.4
-+R2	PS 41x89x74mm - šedá PS 41x89x74mm - grey PS 41x89x74mm - grau	Z54	SOS Electronic, spol. s r.o.	91.190.036	1	/16.4
-+R10.4	PS 41x89x74mm - šedá PS 41x89x74mm - grey PS 41x89x74mm - grau	Z54	SOS Electronic, spol. s r.o.	91.190.036	1	/17.6
-CU1	Řídící obvod Control unit Steuereinheit	SMA_4.01W	Bomar	265.918	1	/10.0
-+R2	Svorka Clamp Klemmen	WAGO.260-301	WAGO	91.250.008	1	/16.4
-+R2	Koncová bočnice End side Endseite	WAGO.260-361	WAGO	91.252.003	1	/16.4
-+R10.4	Svorka Clamp Klemmen	WAGO.260-301	WAGO	91.250.008	1	/17.6

The manufacturer reserves right to use an equivalent replacement device.

3.e

BOMAR, s.r.o. Těžební 1236/1 CZ 627 00, Brno	Stroj/Machine/Maschine: Proline 420.350 H	Název stránky/Name page/Name seiten: Kusovník artiklů / Parts list / Artikelstückliste	Číslo dok./Doc.No/Anzahl der Dokumente.: ES-101.335-B1/B2-V5.2 Napájení/Power supply/Einspeinsung: 3x400V+PE, 50Hz Zpracoval/Processed /Hat verarbeitet: Datum/Date/Datum: 10.02.2022	List/Page/Seite: 3.f Listů/Pages/Seiten: 25

Kusovník artiklů / Parts list / Stückliste

Označení přístroje Device identification Geräteidentifikation	Typ přístroje Device description Gerätebeschreibung	Objednací číslo Type number Typennummer	Výrobce Manufacturer Hersteller	Skladové číslo Part number Lagernummer	Množství Quantity Menge	Umístění Location Stelle
-+R10.4	Koncová bočnice End side Endseite	WAGO.260-361	WAGO	91.252.003	1	/17.6
-FU1	Svorka pojistková Fuse terminal Sicherungsklemme	WK4/THSi5U	WIELAND	91.251.102	1	/7.8
-M5	Ventilátor 24VDC, 154CFM Fan 24VDC, 154CFM Fan 24VDC, 154CFM	RDH1238 B2	Xinruilian Electronic Co.	91.015.126	1	/9.8

The manufacturer reserves right to use an equivalent replacement device.

3.f

PLECH: 30.R230-501
SAMOLEPKA: 31.R230-5027

+OP1

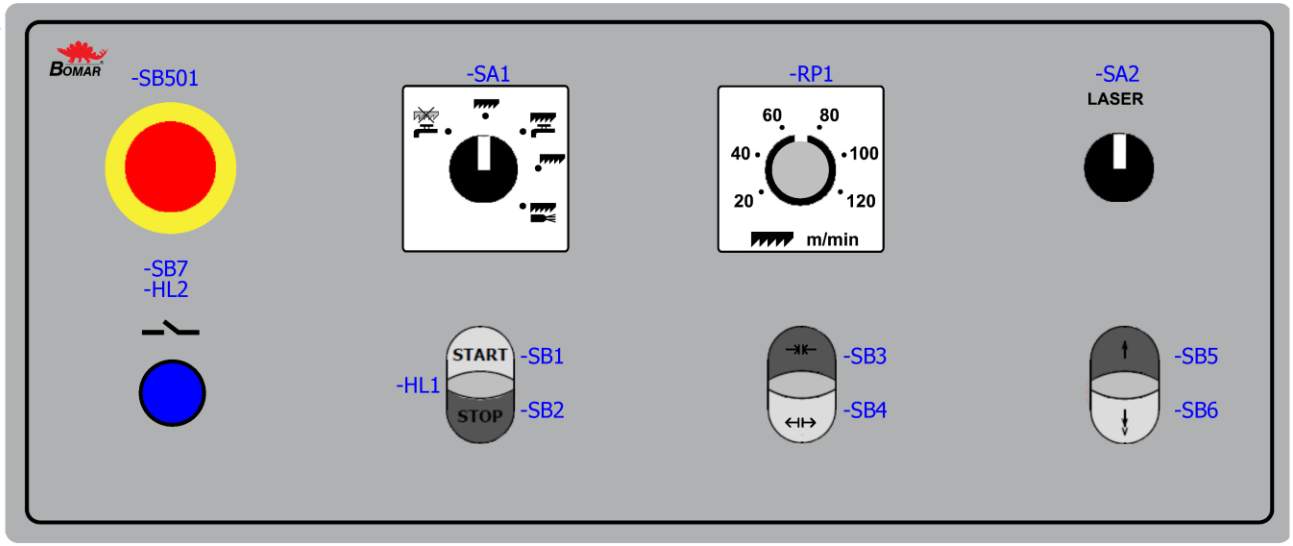

3.g

BOMAR, s.r.o. Těžební 1236/1 CZ 627 00, Brno	Stroj/Machine/Maschine: Proline 420.350 H	Název stránky/Name page/Name seiten: Ovládací panel OP1 / Control panel OP1 / Bedienpult OP1	Číslo dok./Doc.No/Anzahl der Dokumente.:	ES-101.335-B1/B2-V5.2	List/Page/Seite: 4
			Napájení/Power supply/Einspeisung:	3x400V+PE, 50Hz	Listů/Pages/Seiten: 25
			Zpracoval/Processed /Hat verarbeitet:		
			Datum/Date/Datum:	18.01.2022	

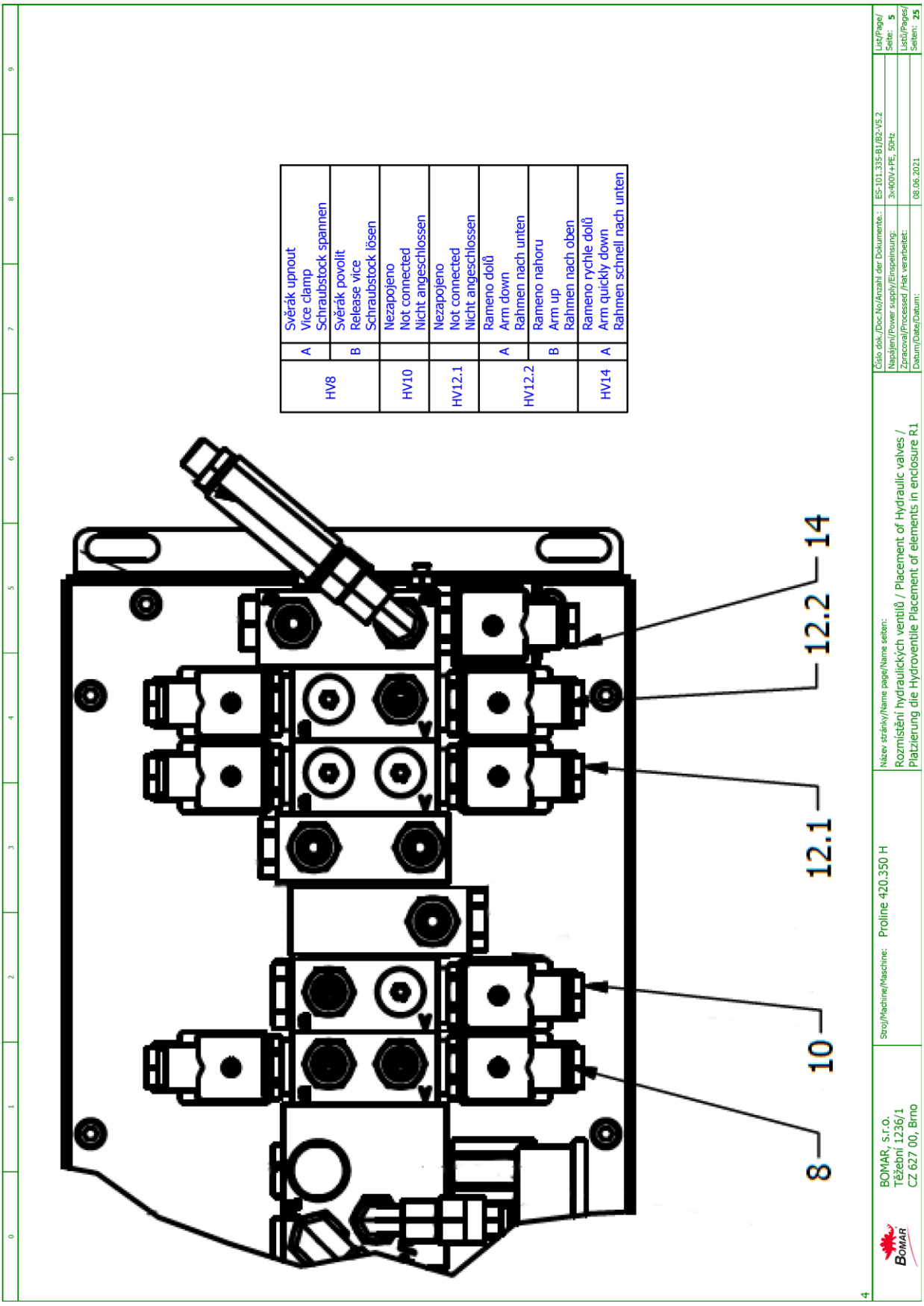
HV8
A Svěrák upnout
Vice clamp
Schraubstock spannen
B Svěrák povolit
Release vice
Schraubstock lösen
HV10
Nezapojeno
Not connected
Nicht angeschlossen
HV12.1
Nezapojeno
Not connected
Nicht angeschlossen
HV12.2
A Rameno dolů
Arm down
Rahmen nach unten
B Rameno nahoru
Arm up
Rahmen nach oben
HV14
A Rameno rychle dolů
Arm quickly down
Rahmen schnell nach unten
8
10
12.1
12.2
14
BOMAR, s.r.o.
Těžební 1236/1
CZ 627 00, Brno
Stroj/Machine/Maschine: Proline 420.350 H
Název stránky/Name page/Name seiten:
Rozmístění hydraulických ventilů / Placement of Hydraulic valves /
Platzierung die Hydroventile Placement of elements in enclosure R1
Číslo dok./Doc.No/Anzahl der Dokumente: ES-101.335-B1/B2-V5.2
List/Page/Seite: 5
Napájení/Power supply/Einspeinsung: 3x400V+PE, 50Hz
Listů/Pages/Seiten: 25
Zpracoval/Processed /Hat verarbeitet:
Datum/Date/Datum: 08.06.2021

ROZVÁDĚČ: 30.R230-201

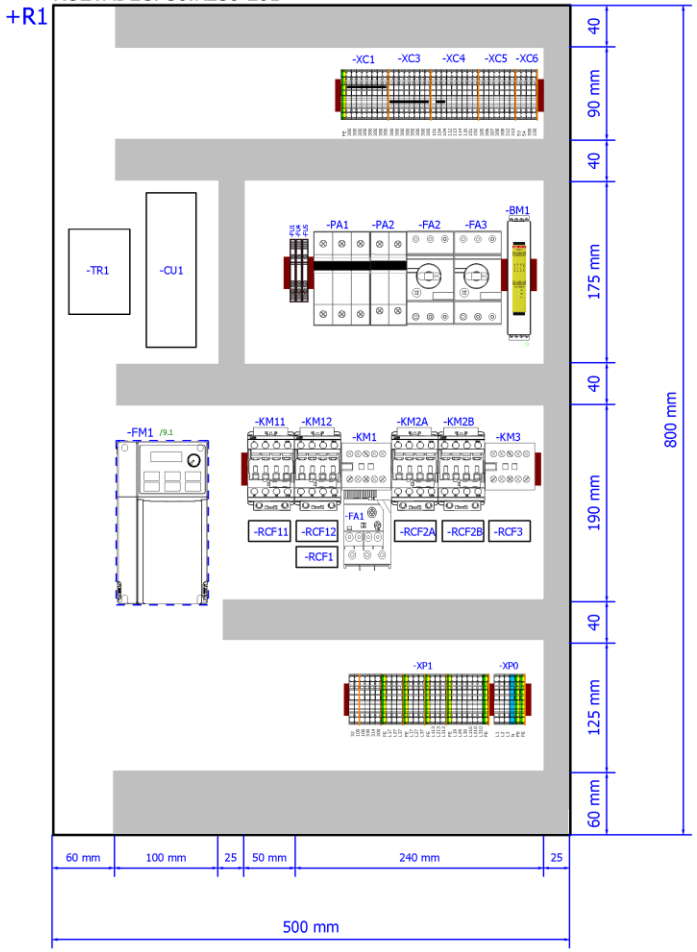

5

BOMAR, s.r.o. Těžební 1236/1 CZ 627 00, Brno	Stroj/Machine/Maschine: Proline 420.350 H	Název stránky/Name page/Name seiten: Rozmístění prvků v rozvaděči R1 / Placement of elements in enclosure R1 / Platzierung der Elemente im Schaltschrank R1 Placement of elements in	Číslo dok./Doc.No/Anzahl der Dokumente.:	ES-101.335-B1/B2-V5.2	List/Page/ Seite: 6
			Napájení/Power supply/Einspeisung:	3x400V+PE, 50Hz	
			Zpracoval/Processed /Hat verarbeitet:		Listů/Pages/ Seiten: 25
			Datum/Date/Datum:	18.01.2022	

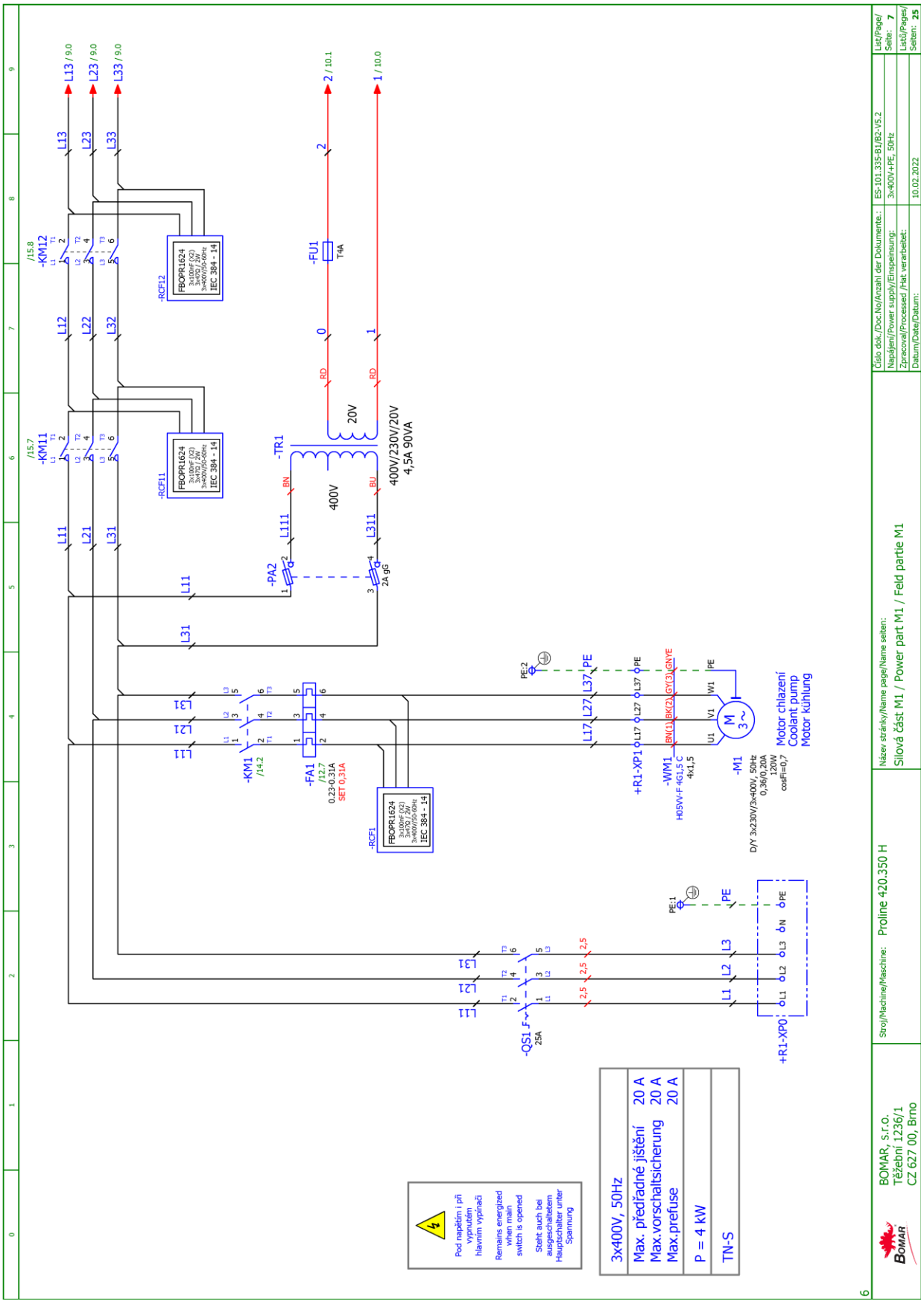
L13 / 9.0
L23 / 9.0
L33 / 9.0
2 / 10.1
1 / 10.0
/15.8
-KM12
/15.7
-KM11
-RCF12
-RCF11
FBOPR1624
3x100nF (X2)
3x470 / 2W
3x400V/50-60Hz
IEC 384 - 14
-FU1
T4A
-TR1
400V
20V
400V/230V/20V
4,5A 90VA
-PA2
2A gG
-KM1
/14.2
-FA1
/12.7
0.23-0.31A
SET 0,31A
-RCF1
PE:2
PE:1
-WM1
H05VV-F 4G1,5 C
4x1,5
+R1-XP1
-M1
D/Y 3x230V/3x400V, 50Hz
0,36/0,20A
120W
cosFi=0,7
Motor chlazení
Coolant pump
Motor kühlung
-QS1
25A
+R1-XP0
Pod napětím i při vypnutém hlavním vypínači
Remains energized when main switch is opened
Steht auch bei ausgeschaltetem Hauptschalter unter Spannung
3x400V, 50Hz
Max. předřadné jištění 20 A
Max.vorschaltsicherung 20 A
Max.prefuse 20 A
P = 4 kW
TN-S
BOMAR, s.r.o.
Těžební 1236/1
CZ 627 00, Brno
Stroj/Machine/Maschine: Proline 420.350 H
Název stránky/Name page/Name seiten:
Silová část M1 / Power part M1 / Feld partie M1
Číslo dok./Doc.No/Anzahl der Dokumente: ES-101.335-B1/B2-V5.2
Napájení/Power supply/Einspeinsung: 3x400V+PE, 50Hz
Zpracoval/Processed /Hat verarbeitet:
Datum/Date/Datum: 10.02.2022
List/Page/Seite: 7
Listů/Pages/Seiten: 25

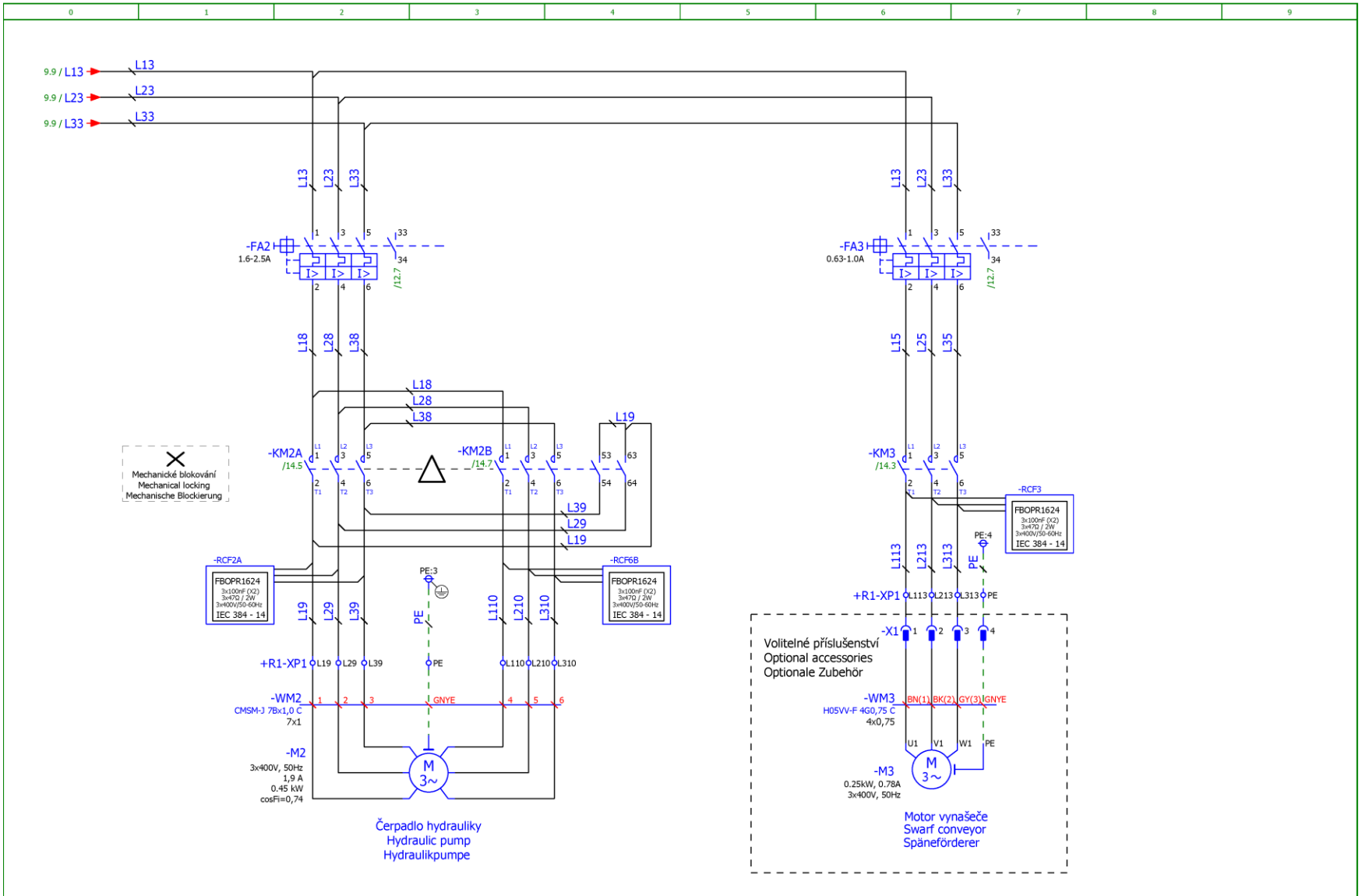

Schémata
Schemas
Schematics

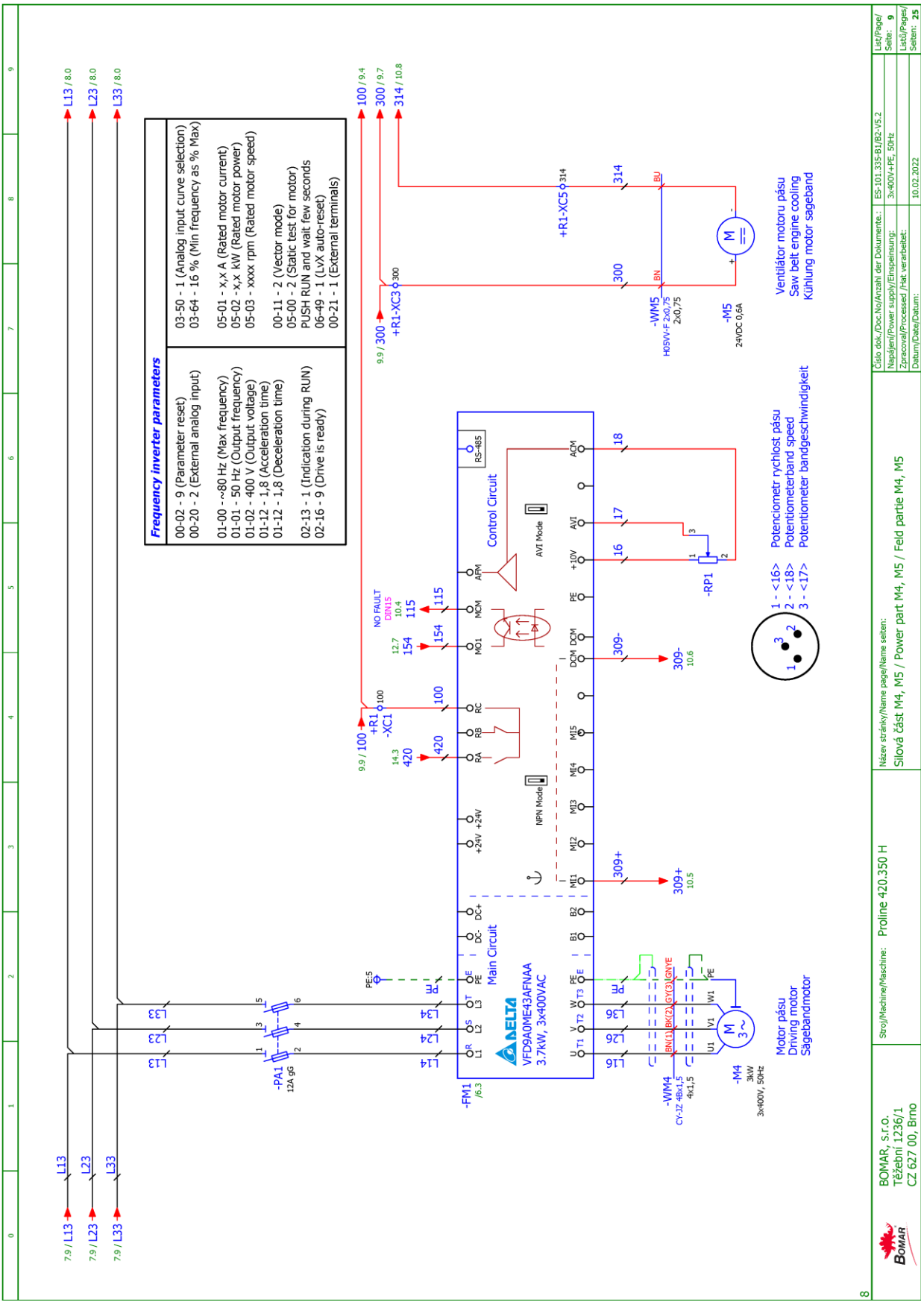
Frequency inverter parameters
00-02 - 9 (Parameter reset)
00-20 - 2 (External analog input)
01-00 - ~80 Hz (Max frequency)
01-01 - 50 Hz (Output frequency)
01-02 - 400 V (Output voltage)
01-12 - 1,8 (Acceleration time)
01-12 - 1,8 (Deceleration time)
02-13 - 1 (Indication during RUN)
02-16 - 9 (Drive is ready)
03-50 - 1 (Analog input curve selection)
03-64 - 16 % (Min frequency as % Max)
05-01 - x,x A (Rated motor current)
05-02 - x,x kW (Rated motor power)
05-03 - xxxx rpm (Rated motor speed)
00-11 - 2 (Vector mode)
05-00 - 2 (Static test for motor)
PUSH RUN and wait few seconds
06-49 - 1 (LvX auto-reset)
00-21 - 1 (External terminals)
L13 / 8.0
L23 / 8.0
L33 / 8.0
7.9 / L13
7.9 / L23
7.9 / L33
-PA1
12A gG
-FM1
/6.3
DELTA
VFD9A0ME43AFNAA
3.7kW, 3x400VAC
Main Circuit
Control Circuit
NPN Mode
AVI Mode
RS-485
NO FAULT
DIN15
-WM4
CY-JZ 4Bx1,5
4x1,5
-M4
3kW
3x400V, 50Hz
Motor pásu
Driving motor
Sägebandmotor
-WM5
H05VV-F 2x0,75
2x0,75
-M5
24VDC 0,6A
Ventiláto motoru pásu
Saw belt engine cooling
Kühlung motor sägeband
-RP1
Potenciometr rychlost pásu
Potentiometerband speed
Potentiometer bandgeschwindigkeit
1 - <16>
2 - <18>
3 - <17>
BOMAR, s.r.o.
Těžební 1236/1
CZ 627 00, Brno
Stroj/Machine/Maschine: Proline 420.350 H
Název stránky/Name page/Name seiten:
Silová část M4, M5 / Power part M4, M5 / Feld partie M4, M5
Číslo dok./Doc.No/Anzahl der Dokumente: ES-101.335-B1/B2-V5.2
Napájení/Power supply/Einspeisnsung: 3x400V+PE, 50Hz
Zpracoval/Processed /Hat verarbeitet:
Datum/Date/Datum: 10.02.2022
List/Page/Seite: 9
Listů/Pages/Seiten: 25

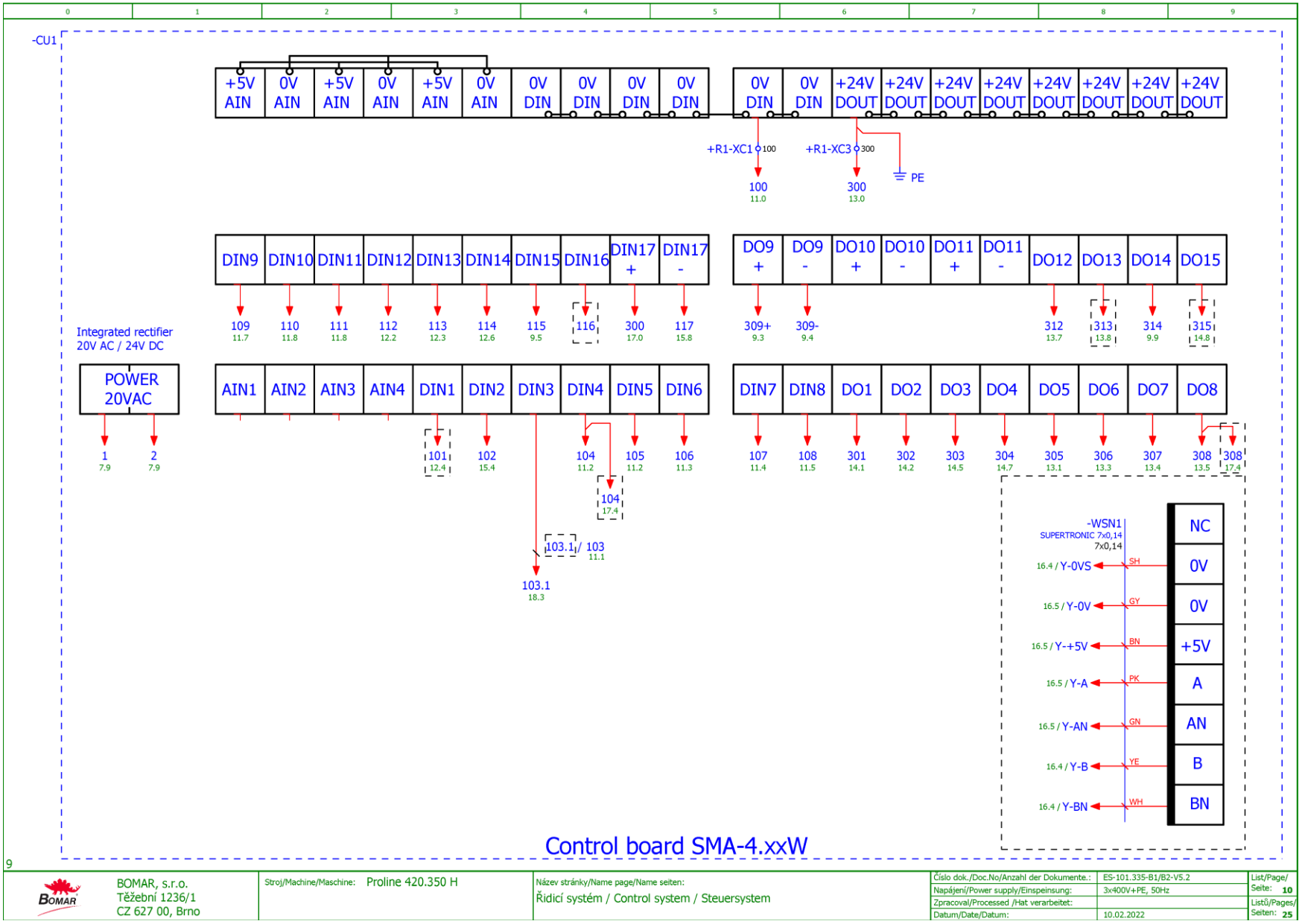
-CU1
+5V AIN
0V AIN
+5V AIN
0V AIN
+5V AIN
0V AIN
0V DIN
0V DIN
0V DIN
0V DIN
0V DIN
0V DIN
+24V DOUT
+24V DOUT
+24V DOUT
+24V DOUT
+24V DOUT
+24V DOUT
+24V DOUT
+24V DOUT
+R1-XC1 100
+R1-XC3 300
PE
100 11.0
300 13.0
DIN9
DIN10
DIN11
DIN12
DIN13
DIN14
DIN15
DIN16
DIN17 +
DIN17 -
DO9 +
DO9 -
DO10 +
DO10 -
DO11 +
DO11 -
DO12
DO13
DO14
DO15
109 11.7
110 11.8
111 11.8
112 12.2
113 12.3
114 12.6
115 9.5
116
300 17.0
117 15.8
309+ 9.3
309- 9.4
312 13.7
313 13.8
314 9.9
315 14.8
Integrated rectifier
20V AC / 24V DC
POWER 20VAC
AIN1
AIN2
AIN3
AIN4
DIN1
DIN2
DIN3
DIN4
DIN5
DIN6
DIN7
DIN8
DO1
DO2
DO3
DO4
DO5
DO6
DO7
DO8
1 7.9
2 7.9
101 12.4
102 15.4
104 11.2
105 11.2
106 11.3
104 17.4
103.1 / 103 11.1
103.1 18.3
107 11.4
108 11.5
301 14.1
302 14.2
303 14.5
304 14.7
305 13.1
306 13.3
307 13.4
308 13.5
308 17.4
-WSN1
SUPERTRONIC 7x0,14
7x0,14
16.4 / Y-0VS
16.5 / Y-0V
16.5 / Y-+5V
16.5 / Y-A
16.5 / Y-AN
16.4 / Y-B
16.4 / Y-BN
SH
GY
BN
PK
GN
YE
WH
NC
0V
0V
+5V
A
AN
B
BN
Control board SMA-4.xxW
9
BOMAR, s.r.o.
Těžební 1236/1
CZ 627 00, Brno
Stroj/Machine/Maschine: Proline 420.350 H
Název stránky/Name page/Name seiten:
Řidicí systém / Control system / Steuersystem
Číslo dok./Doc.No/Anzahl der Dokumente.: ES-101.335-B1/B2-V5.2
Napájení/Power supply/Einspeisung: 3x400V+PE, 50Hz
Zpracoval/Processed /Hat verarbeitet:
Datum/Date/Datum: 10.02.2022
List/Page/Seite: 10
Listů/Pages/Seiten: 25

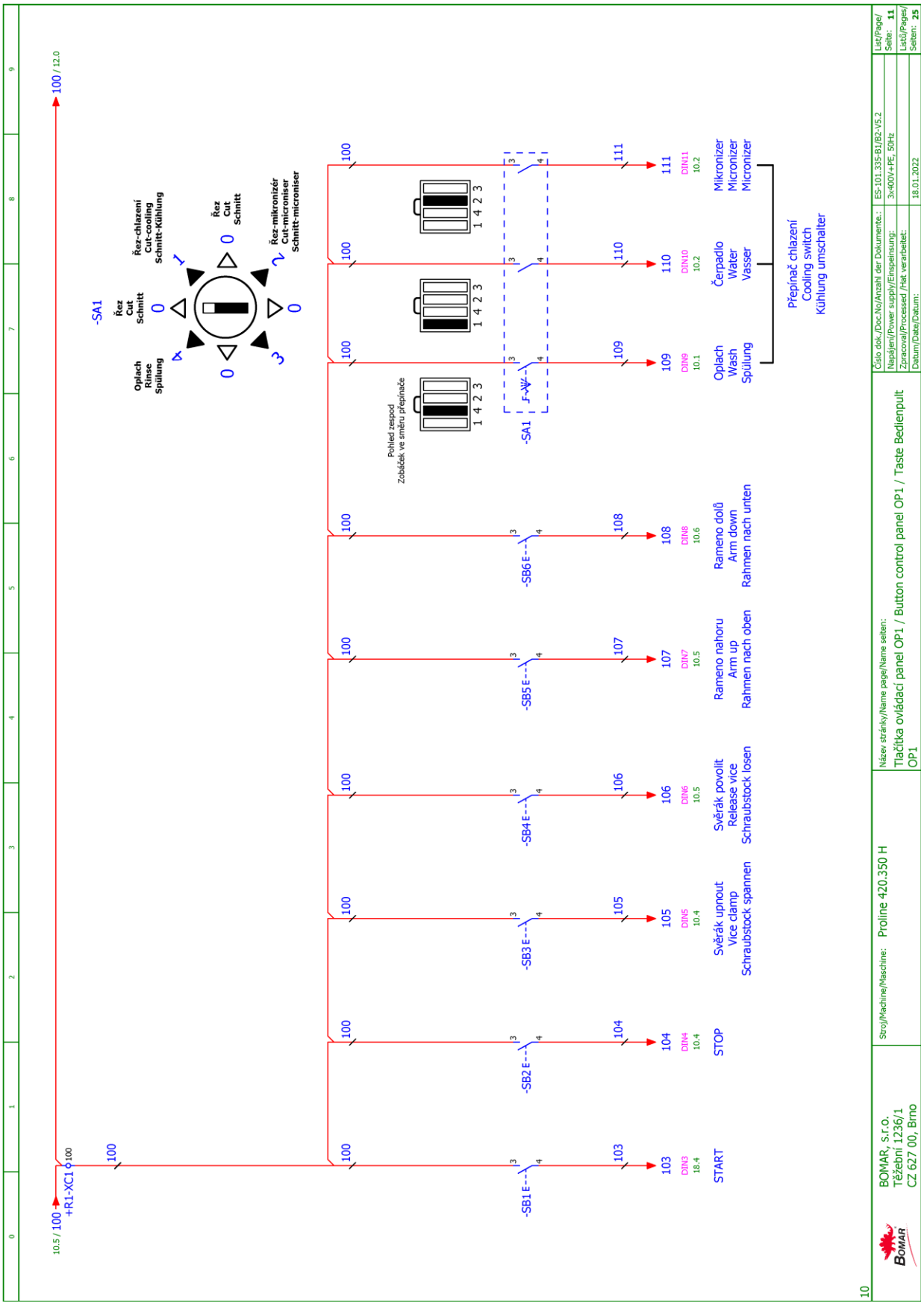
-SA1
Řez
Cut
Schnitt
Oplach
Rinse
Spülung
Řez-chlazení
Cut-cooling
Schnitt-Kühlung
Řez-mikronizér
Cut-microniser
Schnitt-microniser
Pohled zespod
Zobáček ve směru přepínače
1 4 2 3
-SA1
Přepínač chlazení
Cooling switch
Kühlung umschalter
-SB1 E
-SB2 E
-SB3 E
-SB4 E
-SB5 E
-SB6 E
103 DIN3 18.4 START
104 DIN4 10.4 STOP
105 DIN5 10.4 Svěrák upnout Vice clamp Schraubstock spannen
106 DIN6 10.5 Svěrák povolit Release vice Schraubstock losen
107 DIN7 10.5 Rameno nahoru Arm up Rahmen nach oben
108 DIN8 10.6 Rameno dolů Arm down Rahmen nach unten
109 DIN9 10.1 Oplach Wash Spülung
110 DIN10 10.2 Čerpadlo Water Vasser
111 DIN11 10.2 Mikronizer Micronizer Micronizer
100 / 12.0
10.5 / 100
+R1-XC1
BOMAR, s.r.o.
Těžební 1236/1
CZ 627 00, Brno
Stroj/Machine/Maschine: Proline 420.350 H
Název stránky/Name page/Name seiten:
Tlačítka ovládací panel OP1 / Button control panel OP1 / Taste Bedienpult OP1
Číslo dok./Doc.No/Anzahl der Dokumente.: ES-101.335-B1/B2-V5.2
Napájení/Power supply/Einspeinsung: 3x400V+PE, 50Hz
Zpracoval/Processed /Hat verarbeitet:
Datum/Date/Datum: 18.01.2022
List/Page/ Seite: 11
Listů/Pages/ Seiten: 25
10

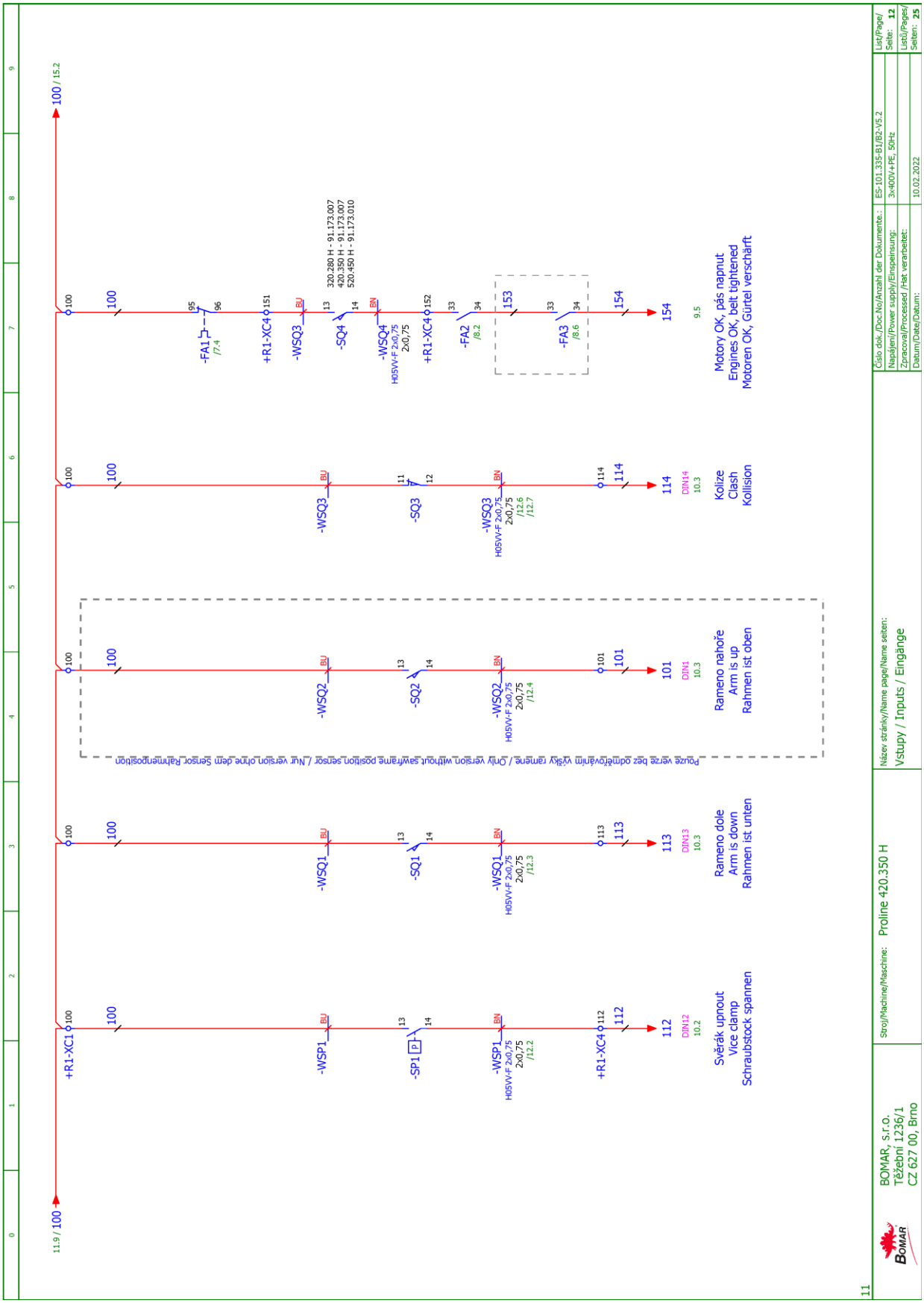
11.9 / 100
100 / 15.2
+R1-XC1
-WSP1
-SP1
-WSP1
H05VV-F 2x0,75
2x0,75
/12.2
+R1-XC4
112
DIN12
10.2
Svěrák upnout
Vice clamp
Schraubstock spannen
-WSQ1
-SQ1
-WSQ1
H05VV-F 2x0,75
2x0,75
/12.3
113
DIN13
10.3
Rameno dole
Arm is down
Rahmen ist unten
Použije verze bez odměřování výšky ramene / Only version without sewframe position sensor / Nur version ohne dem Sensor Rahmenposition
-WSQ2
-SQ2
-WSQ2
H05VV-F 2x0,75
2x0,75
/12.4
101
DIN1
10.3
Rameno nahoře
Arm is up
Rahmen ist oben
-WSQ3
-SQ3
-WSQ3
H05VV-F 2x0,75
2x0,75
/12.6
/12.7
114
DIN14
10.3
Kolize
Clash
Kollision
-FA1
/7.4
+R1-XC4
-WSQ3
-SQ4
-WSQ4
H05VV-F 2x0,75
2x0,75
320.280 H - 91.173.007
420.350 H - 91.173.007
520.450 H - 91.173.007
+R1-XC4
-FA2
/8.2
-FA3
/8.6
154
9.5
Motory OK, pás napnut
Engines OK, belt tightened
Motoren OK, Gürtel verschärft
Číslo dok./Doc.No/Anzahl der Dokumente:
ES-101.335-B1/B2-V5.2
List/Page/Seite: 12
Napájení/Power supply/Einspeisung:
3x400V+PE, 50Hz
Listů/Pages/Seiten: 25
Zpracoval/Processed /Hat verarbeitet:
Datum/Date/Datum:
10.02.2022
BOMAR, s.r.o.
Těžební 1236/1
CZ 627 00, Brno
Stroj/Machine/Maschine:
Proline 420.350 H
Název stránky/Name page/Name seiten:
Vstupy / Inputs / Eingänge

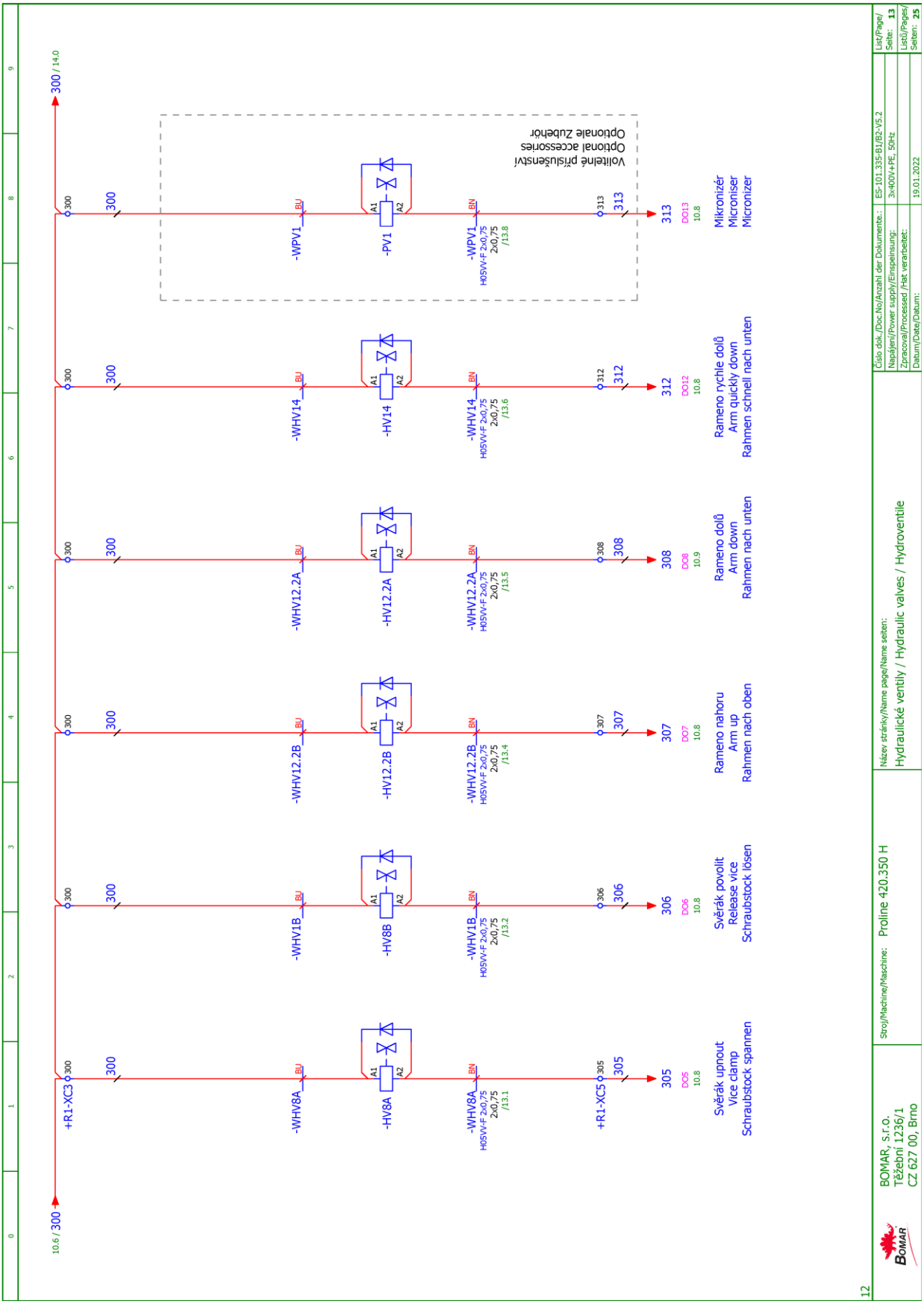
10.6 / 300
300 / 14.0
+R1-XC3
-WHV8A
-HV8A
-WHV8A
H05VV-F 2x0,75
2x0,75
/13.1
+R1-XC5
305
DO5
10.8
Svěrák upnout
Vice clamp
Schraubstock spannen
-WHV1B
-HV8B
-WHV1B
/13.2
306
DO6
Svěrák povolit
Release vice
Schraubstock lösen
-WHV12.2B
-HV12.2B
-WHV12.2B
/13.4
307
DO7
Rameno nahoru
Arm up
Rahmen nach oben
-WHV12.2A
-HV12.2A
-WHV12.2A
/13.5
308
DO8
10.9
Rameno dolů
Arm down
Rahmen nach unten
-WHV14
-HV14
-WHV14
/13.6
312
DO12
Rameno rychle dolů
Arm quickly down
Rahmen schnell nach unten
-WPV1
-PV1
-WPV1
/13.8
313
DO13
Mikronizér
Microniser
Micronizer
Volitelné příslušenství
Optional accessories
Optionale Zubehör
BOMAR, s.r.o.
Těžební 1236/1
CZ 627 00, Brno
Stroj/Machine/Maschine: Proline 420.350 H
Název stránky/Name page/Name seiten:
Hydraulické ventily / Hydraulic valves / Hydroventile
Číslo dok./Doc.No/Anzahl der Dokumente: ES-101.335-B1/B2-V5.2
Napájení/Power supply/Einspeisung: 3x400V+PE, 50Hz
List/Page/Seite: 13
Listů/Pages/Seiten: 25
12

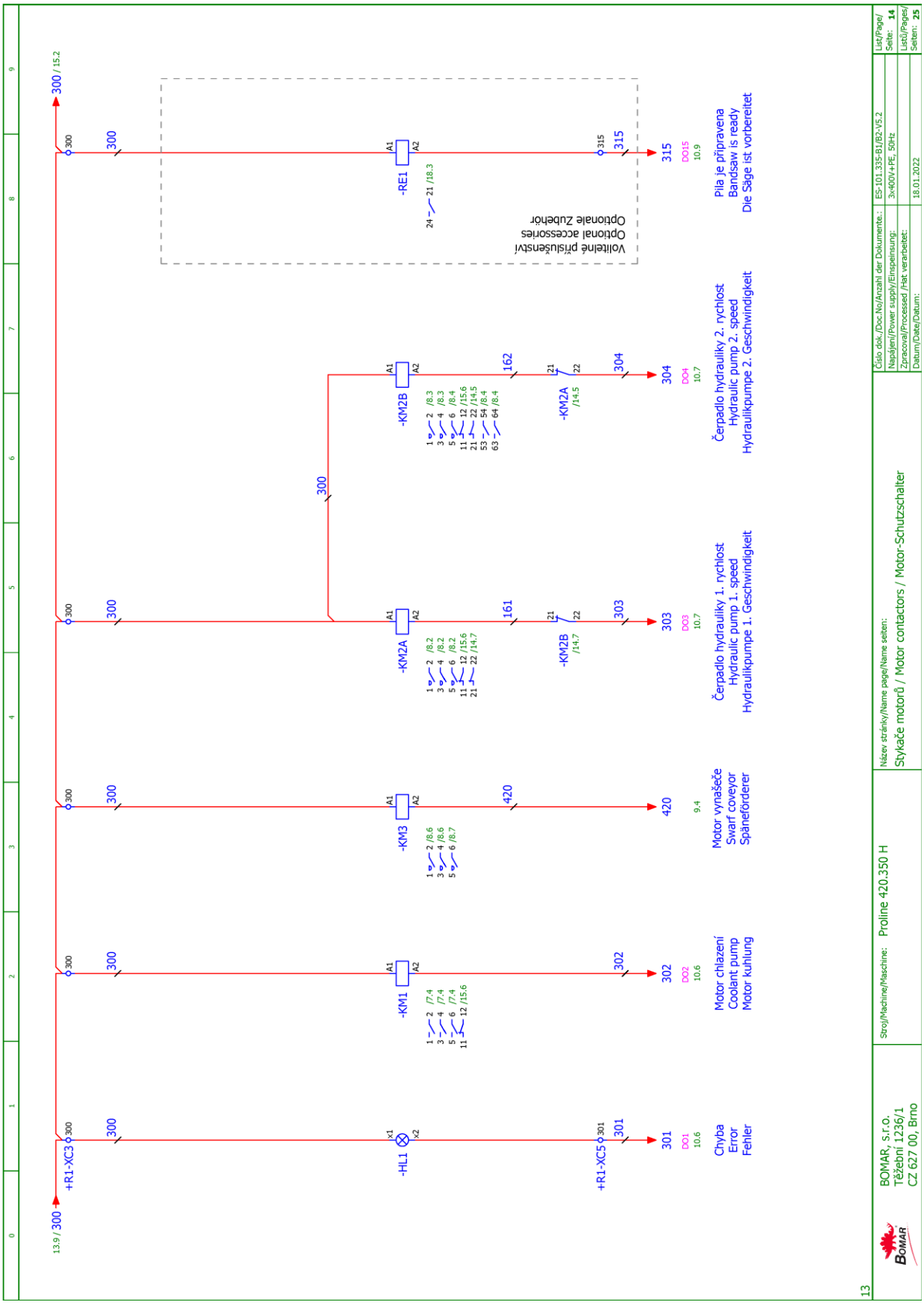

Schémata
Schemas
Schematics

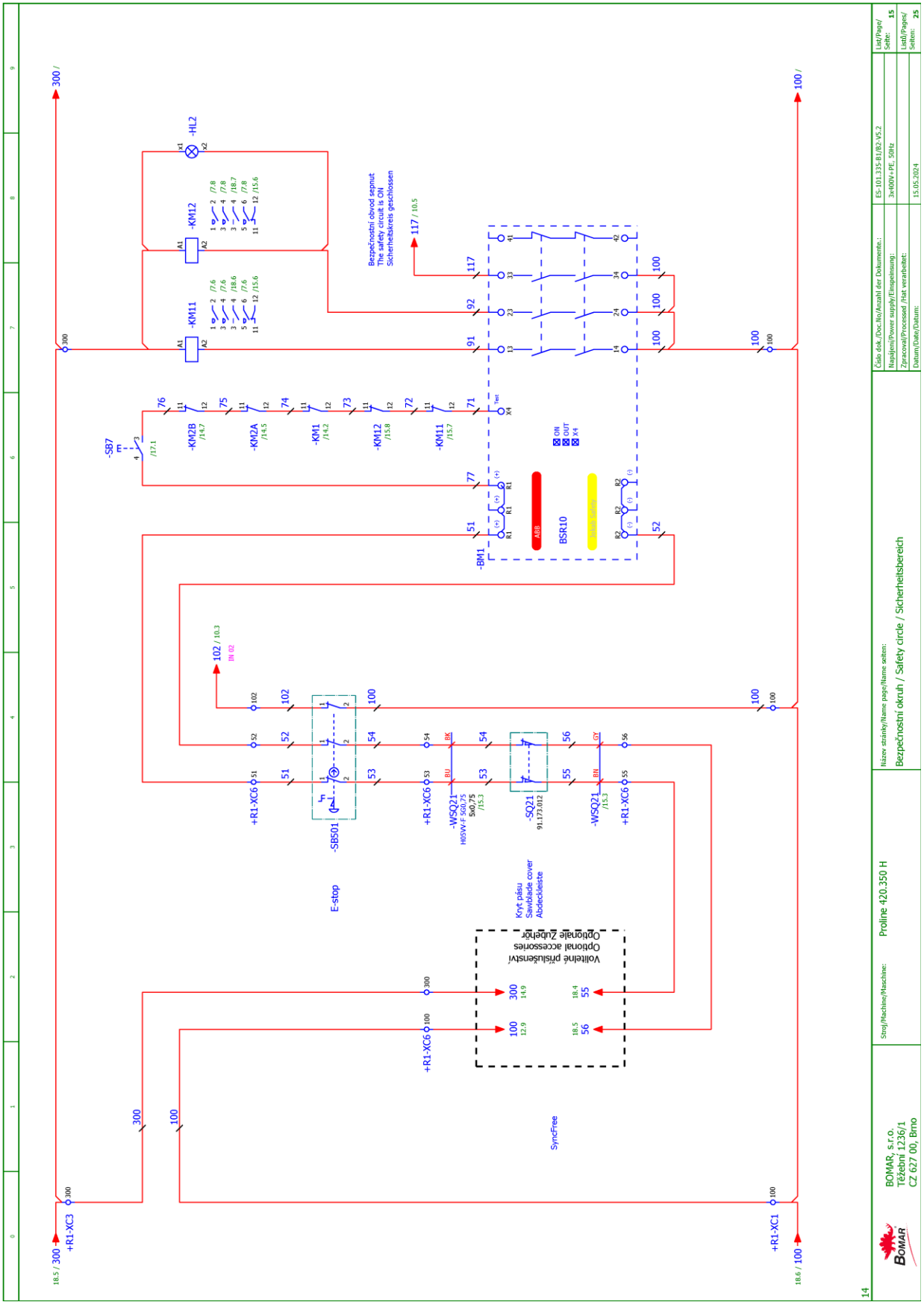
Bezpečnostní obvod sepnut
The safety circuit is ON
Sicherheitskreis geschlossen
E-stop
Kryt pásu
Sawblade cover
Abdeckleiste
Volitelné příslušenství
Optional accessories
Optionale Zubehör
SyncFree
BSR10
ABB
-BM1
-SB7
-KM2B
-KM2A
-KM1
-KM12
-KM11
-HL2
-SB501
-WSQ21
-SQ21
-WSQ2L
+R1-XC6
+R1-XC3
+R1-XC1
Číslo dok./Doc.No/Anzahl der Dokumente:
ES-101.335-B1/B2-V5.2
Napájení/Power supply/Einspeisung:
3x400V+PE, 50Hz
Zpracová/Processed /Hat verarbeitet:
Datum/Date/Datum:
15.05.2024
List/Page/Seite: 15
List/Pages/Seiten: 25
Název stránky/Name page/Name seiten:
Bezpečnostní okruh / Safety circle / Sicherheitsbereich
Stroj/Machine/Maschine:
Proline 420.350 H
BOMAR, s.r.o.
Těžební 1236/1
CZ 627 00, Brno

pouze verze s odměřováním výšky ramene/Only version with sawframe position sensor/Nur version mit dem Sensor Rahmenposition

SN1

Snímač výšky ramene Sawframe position sensor Rahmenposition Sensor		Kabel HELU-Flexi 7x0.14
+	HNĚDÁ BROWN BRAUN	HNĚDÁ BROWN BRAUN
-	SEDA GREY GRAU	SEDA GREY GRAU
A	RUZOVA PINK ROSAROT	RŮŽOVÁ PINK ROSA
AN	ZELENÁ GREEN GRÜN	ZELENÁ GREEN GRÜN
B	ŽLUTÁ YELLOW GELB	ŽLUTÁ YELLOW GELB
BN	BÍLÁ WHITE WEIS	BÍLÁ WHITE WEIS
	ČERNÁ BLACK SCHWARZ	STÍNĚNÍ SHIELD LEITUNGSSCHIRM

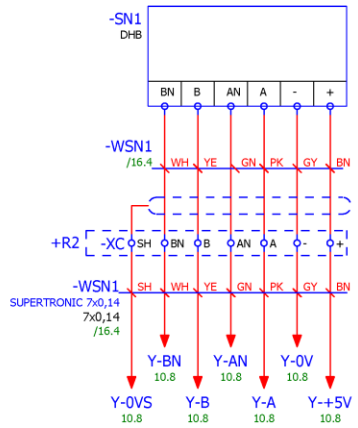

15

BOMAR, s.r.o. Těžební 1236/1 CZ 627 00, Brno	Stroj/Machine/Maschine: Proline 420.350 H	Název stránky/Name page/Name seiten: Snímač výšky ramene / Sawframe position sensor / Rahmenposition sensor	Číslo dok./Doc.No/Anzahl der Dokumente.: ES-101.335-B1/B2-V5.2 Napájení/Power supply/Einspeinsung: 3x400V+PE, 50Hz Zpracoval/Processed /Hat verarbeitet: Datum/Date/Datum: 18.01.2022	List/Page/Seite: 16 Listů/Pages/Seiten: 25

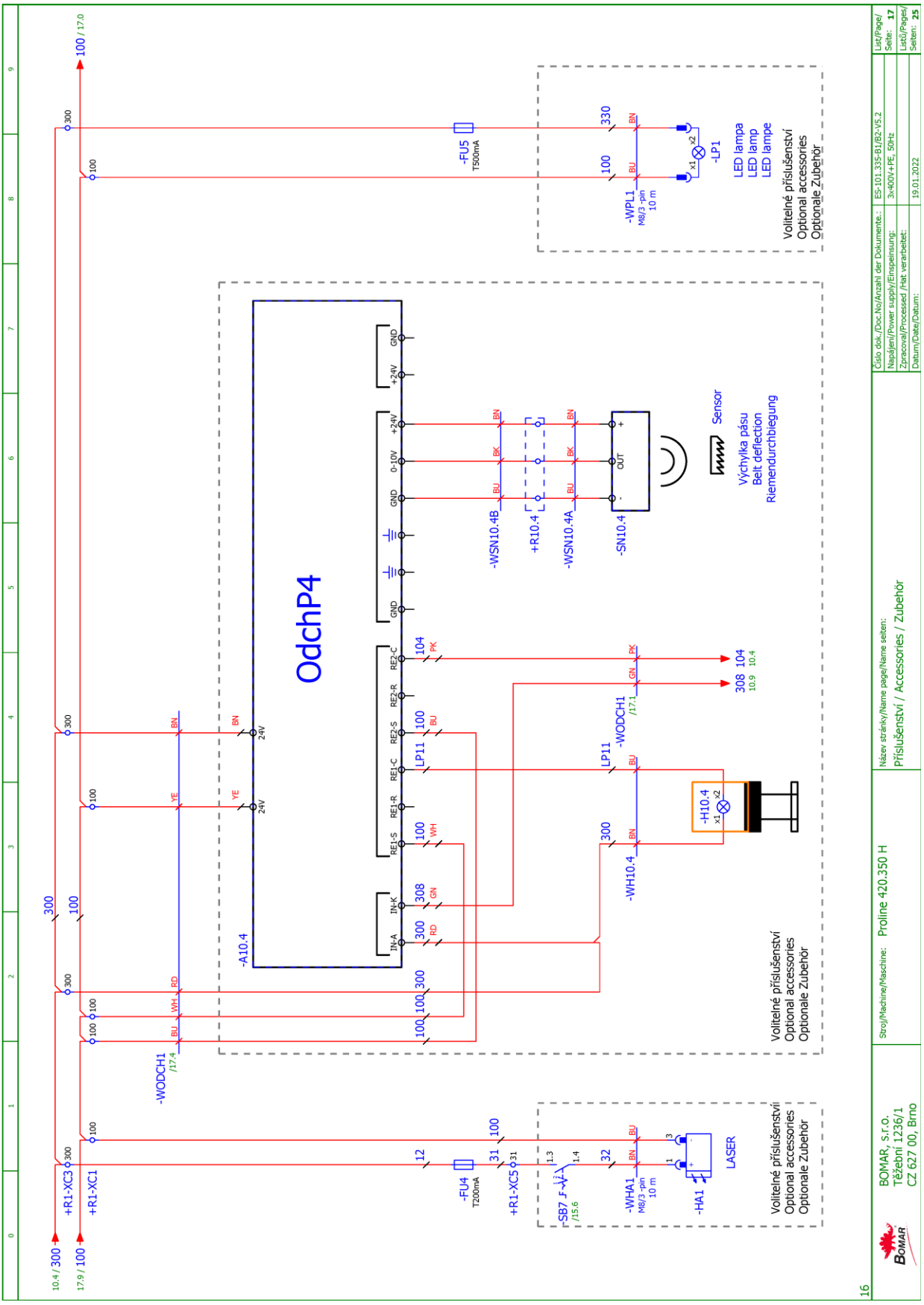
OdchP4
-A10.4
-FU5
T500mA
-LP1
LED lampa
LED lamp
LED lampe
-WPL1
M8/3 -pin
10 m
Volitelné příslušenství
Optional accessories
Optionale Zubehör
-WSN10.4B
+R10.4
-WSN10.4A
-SN10.4
Sensor
Výchylka pásu
Belt deflection
Riemendurchbiegung
-WODCH1
-H10.4
-WH10.4
LP11
-FU4
T200mA
+R1-XC5
-SB7
-WHA1
-HA1
LASER
+R1-XC3
+R1-XC1
Číslo dok./Doc.No/Anzahl der Dokumente: ES-101.335-B1/B2-V5.2
Napájení/Power supply/Einspeisung: 3x400V+PE, 50Hz
Zpracoval/Processed /Hat verarbeitet:
Datum/Date/Datum: 19.01.2022
List/Page/Seite: 17
Listů/Pages/Seiten: 25
Stroj/Machine/Maschine: Proline 420.350 H
Název stránky/Name page/Name seiten:
Příslušenství / Accessories / Zubehör
BOMAR, s.r.o.
Těžební 1236/1
CZ 627 00, Brno
16

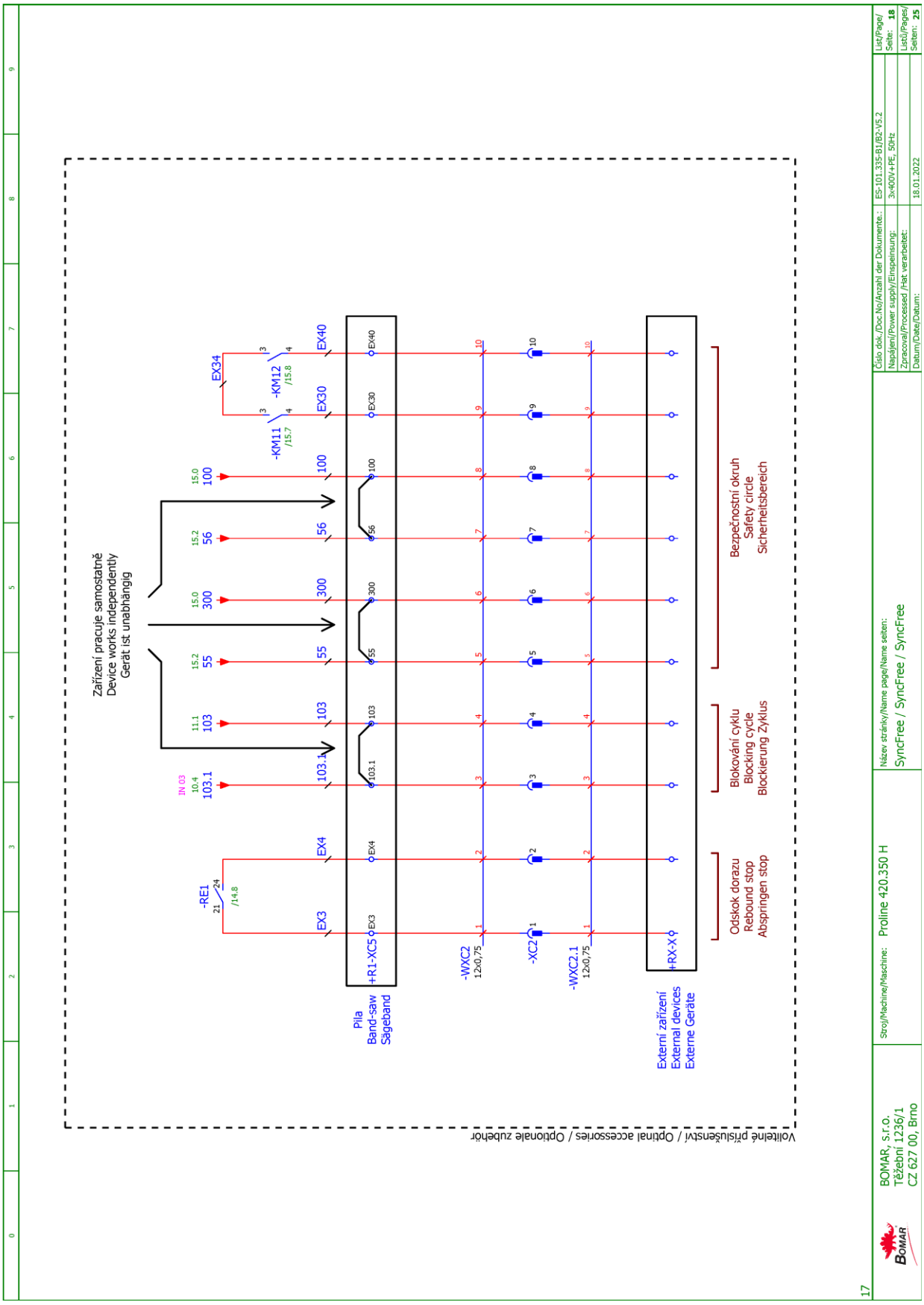

Schémata
Schemas
Schematics

6.1.2. 3×230 V + PE, 50 Hz

Obsah / Table of contents / Inhalt

Strana Page Seite	Název strany Page name Seitenname	Datum Date Datum
/1	Úvodní strana / Start page / Startseite	10.02.2022
/2	Obsah / Table of contents / Inhaltsverzeichnis	10.02.2022
/3	Kusovník artiklů / Parts list / Artikelstückliste	19.01.2022
/3.a	Kusovník artiklů / Parts list / Artikelstückliste	19.01.2022
/3.b	Kusovník artiklů / Parts list / Artikelstückliste	19.01.2022
/3.c	Kusovník artiklů / Parts list / Artikelstückliste	19.01.2022
/3.d	Kusovník artiklů / Parts list / Artikelstückliste	19.01.2022
/3.e	Kusovník artiklů / Parts list / Artikelstückliste	19.01.2022
/3.f	Kusovník artiklů / Parts list / Artikelstückliste	19.01.2022
/4.a	Ovládací panel OP1 / Control panel OP1 / Bedienpult OP1	19.01.2022
/5	Rozmístění hydraulických ventilů / Placement of Hydraulic valves / Platzierung die Hydroventile	19.01.2022
/6	Rozmístění prvků v rozvaděči R1 / Placement of elements in enclosure R1 / Platzierung der Elemente im Schaltschrank R1	19.01.2022
/7	Silová část M1 / Power part M1 / Feld partie M1	19.01.2022
/8	Silová část M2, M3 / Power part M2, M3 / Feld partie M2, M3	19.01.2022
/9	Silová část M4, M5 / Power part M4, M5 / Feld partie M4, M5	10.02.2022
/10	Řidicí systém / Control system / Steuersystem	24.01.2022
/11	Tlačítka ovládací panel OP1 / Button control panel OP1 / Taste Bedienpult OP1	19.01.2022
/12	Vstupy / Inputs / Eingänge	19.01.2022
/13	Hydraulické ventily / Hydraulic valves / Hydroventile	19.01.2022
/14	Stykače motorů / Motor contactors / Motor-Schutzschalter	19.01.2022
/15	Bezpečnostní okruh / Safety circle / Sicherheitsbereich	19.01.2022
/16	Snímač výšky ramene / Sawframe position sensor / Rahmenposition sensor	19.01.2022
/17	Příslušenství / Accessories / Zubehör	19.01.2022
/18	SyncFree / SyncFree / SyncFree	19.01.2022

Kusovník artiklů / Parts list / Stückliste

Označení přístroje Device identification Geräteidentifikation	Typ přístroje Device description Gerätebeschreibung	Objednací číslo Type number Typennummer	Výrobce Manufacturer Hersteller	Skladové číslo Part number Lagernummer	Množství Quantity Menge	Umístění Location Stelle
-BM1	Bezpečnostní relé 24VDC, 3NO/1NC Safety relay 24VDC, 3NO/1NC Sicherheitsrelais 24VDC, 3NO/1NC	ABB.2TLA010040R0000	ABB	91.051.076	1	/15.5
-FA2	Pomocné kontakty - 1xNO+1xNC Auxiliary contacts - 1xNO+1xNC Hilfskontakte - 1xNO+1xNC	HKF1-11	ABB	91.046.002	1	/8.2
-FA3	Pomocné kontakty - 1xNO+1xNC Auxiliary contacts - 1xNO+1xNC Hilfskontakte - 1xNO+1xNC	HKF1-11	ABB	91.046.002	1	/8.6
-SN10.4	Indukční snímač vzdálenosti Inductive proximity sensor Induktive Näherungssensor	BAW R06AC-UAF20B-EP03	BALLUFF	91.172.016	1	/17.6
-A10.4	Odchylka pásu Band deviation Bandabweichung	BDM2	BOMAR s.r.o.	266.254	1	/17.2
-SN1	Snímač výšky ramene Arm height sensor Arm Höhensensor	DHB	BOMAR s.r.o.	251.232	1	/16.4
-HL1	Signálka LED červená na adaptér Red LED light for adapter Red LED-Licht für Adapter	M22-LED-R	EATON	91.061.027	1	/14.1
-KM2A	Stykač - 4kW/400V, 3P Contactor - 4kW/400V, 3P Schütz - 4 kW / 400V, 3P	AF09-30-01-11	ABB	91.040.047	1	/14.5
-KM2A	Mechanické blokování Mechanical interlock unit Mechanische Interlockeinheit	VM4	ABB	91.041.045	1	/14.5
-KM2B	Stykač - 4kW/400V, 3P Contactor - 4kW/400V, 3P Schütz - 4 kW / 400V, 3P	AF09-30-01-11	ABB	91.040.047	1	/14.7
-KM2B	Pomocný kontakt - 1xNO Auxiliary contact - 1xNO Hilfskontakt - 1xNO	CA4-10	ABB	91.041.044	2	/14.7
-SA1	Hlavice s otočným přepínačem - 4 polohy Head with rotary switch - 4 positions Kopf mit Drehschalter - 4 Positionen	M22 - WRK4	EATON	91.060.087	1	/11.7

The manufacturer reserves right to use an equivalent replacement device.

2

Kusovník artiklů / Parts list / Stückliste

Označení přístroje Device identification Geräteidentifikation	Typ přístroje Device description Gerätebeschreibung	Objednací číslo Type number Typennummer	Výrobce Manufacturer Hersteller	Skladové číslo Part number Lagernummer	Množství Quantity Menge	Umístění Location Stelle
-FU1	Pojistka trubičková - 4A/250V, pomalá, 5x20 Tube fuse - 4A/250V, slow, 5x20 Rohrsicherung - 4A / 250V, langsam, 5x20	T4A/250V	ESKA	91.230.015	1	/7.8
-RP1	Potenciometr 4k7 Potenciometer 4k7 Potentiometer 4k7	TP195 4k7/N20A	Elektronické součástky CZ, a.s	91.283.015	1	/9.5
-FA1	Tepelné relé - 0.74A Thermal relay - 0.74A Thermische Relais - 0.74A	T16-0,74	ABB	91.050.021	1	/7.4
-RP1	Hlavice potenciometru - 24mm Head of potentiometer 24mm Leiter Potentiometer 24mm	S8877 BLK	GES-ELECTRONICS, a.s.	91.060.063	1	/9.5
-RCF1	Filtr RFC vývodový Efferent RFC filter Ableitenden RFC Filter	FBOPR1624	Ing. Miroslav Vlček	91.041.015	1	/7.3
-RCF2A	Filtr RFC vývodový Efferent RFC filter Ableitenden RFC Filter	FBOPR1624	Ing. Miroslav Vlček	91.041.015	1	/8.1
-RCF3	Filtr RFC vývodový Efferent RFC filter Ableitenden RFC Filter	FBOPR1624	Ing. Miroslav Vlček	91.041.015	1	/8.7
-RCF6B	Filtr RFC vývodový Efferent RFC filter Ableitenden RFC Filter	FBOPR1624	Ing. Miroslav Vlček	91.041.015	1	/8.4
-RCF11	Filtr RFC vývodový Efferent RFC filter Ableitenden RFC Filter	FBOPR1624	Ing. Miroslav Vlček	91.041.015	1	/7.6
-RCF12	Filtr RFC vývodový Efferent RFC filter Ableitenden RFC Filter	FBOPR1624	Ing. Miroslav Vlček	91.041.015	1	/7.7
-+R2	Kleštinová vývodka Cable gland Kabelverschraubung	AG-1545.12.06	Schmachtl CZ s.r.o.	91.070.010	2	/16.4
-+R2	Matice černá Nut black Nuss schwarz	AG8245.12	Schmachtl CZ s.r.o.	91.072.010	2	/16.4

The manufacturer reserves right to use an equivalent replacement device.

3

Kusovník artiklů / Parts list / Stückliste

Označení přístroje Device identification Geräteidentifikation	Typ přístroje Device description Gerätebeschreibung	Objednací číslo Type number Typennummer	Výrobce Manufacturer Hersteller	Skladové číslo Part number Lagernummer	Množství Quantity Menge	Umístění Location Stelle
-+R10.4	Kleštinová vývodka Cable gland Kabelverschraubung	AG-1545.12.06	Schmachtl CZ s.r.o.	91.070.010	2	/17.6
-+R10.4	Matice černá Nut black Nuss schwarz	AG8245.12	Schmachtl CZ s.r.o.	91.072.010	2	/17.6
-FA2	Motorový spouštěč - 2.5A Motor starter - 2.5A Motorstarter - 2.5A	MS116-2,5	ABB	91.045.021	1	/8.2
-FA3	Motorový spouštěč - 1.6A Motor starter - 1.6A Motorstarter - 1.6A	MS116-1,6	ABB	91.045.020	1	/8.6
-H10.4	Maják - základna Lighthouse - Base Leuchtturm - Basis	SL7-CB-100	EATON	91.063.058	1	/17.3
-H10.4	Maják - žlutý Lighthouse - yellow Leuchtturm - gelb	SL7-L-Y	EATON	91.063.059	1	/17.3
-H10.4	Žárovka 24V Lamp 24V Lampe 24V	SL7-L24	EATON	91.063.061	1	/17.3
-KM1	Ministykač - 4kW/400V, 3P Mini contactor - 4kW/400V, 3P Mini-Schütz - 4kW / 400V, 3P	B6S-30-01-1.7-71	ABB	91.040.049	1	/14.2
-KM2A	Pomocný kontakt - 1xNC Auxiliary contact - 1xNC Hilfskontakt - 1 xNC	CA4-01	ABB	91.041.043	1	/14.5
-KM2B	Pomocný kontakt - 1xNC Auxiliary contact - 1xNC Hilfskontakt - 1 xNC	CA4-01	ABB	91.041.043	1	/14.7
-KM3	Ministykač - 4kW/400V, 3P Mini contactor - 4kW/400V, 3P Mini-Schütz - 4kW / 400V, 3P	B6S-30-01-1.7-71	ABB	91.040.049	1	/14.3
-KM11	Stykač - 5,5kW/400V, 3P Contactor - 5,5kW/400V, 3P Schütz - 5,5kW / 400V, 3P	AF12-30-01-11	ABB	91.040.051	1	/15.7

The manufacturer reserves right to use an equivalent replacement device.

Kusovník artiklů / Parts list / Stückliste

Označení přístroje Device identification Geräteidentifikation	Typ přístroje Device description Gerätebeschreibung	Objednací číslo Type number Typennummer	Výrobce Manufacturer Hersteller	Skladové číslo Part number Lagernummer	Množství Quantity Menge	Umístění Location Stelle
-KM11	Pomocný kontakt - 1xNO Auxiliary contact - 1xNO Hilfskontakt - 1xNO	CA4-10	ABB	91.041.044	1	/15.7
-KM12	Stykač - 5,5kW/400V, 3P Contactor - 5,5kW/400V, 3P Schütz - 5,5kW / 400V, 3P	AF12-30-01-11	ABB	91.040.051	1	/15.8
-KM12	Pomocný kontakt - 1xNO Auxiliary contact - 1xNO Hilfskontakt - 1xNO	CA4-10	ABB	91.041.044	1	/15.8
-M5	Ventilátor 24VDC, 5W Fan 24VDC, 5W Fan 24VDC, 5,W	EEC0252B1-A99	SUNON	91.015.139	1	/9.8
-PA1	Pojistkový odpojovač E-90 - 2P Fuse disconnector E-90 - 2P Sicherungstrenner E90 - 2P	E 92/32	ABB	91.241.013	1	/7.5
-QS1	3 pólový odpínač, 40A Disconnector - 3P, 40A Trennschalter - 3P, 40A	OT40FT3	ABB	91.170.019	1	/7.0
-QS1	Rukojeť odpínače - černá Handle switch - black Griffschalter - schwarz	OHBS2RJ	ABB	91.180.015	1	/7.0
-QS1	Kryt svorek Terminal shroud Klemmenabdeckung	OTS40T3	ABB	91.170.017	1	/7.0
-RE1	Ministykač - 4kW/400V, 3P Mini contactor - 4kW/400V, 3P Mini-Schütz - 4kW / 400V, 3P	B6S-30-01-1.7-71	ABB	91.040.049	1	/14.8
-RP1	Svorka rychloupínací Fastconnect clamp Fast Connect Klemm	WAGO 224-112	WAGO	91.250.009	3	/9.5
-SA1	Upevňovací adaptér + 1NO Attaching adapter + 1NO Montageadapter + 1NO	M22-AK10	EATON	91.061.021	1	/11.7
-SA1	Kontaktní blok - 1NO Contact block - 1NO Kontaktblock - 1NO	M22-K10	EATON	91.061.022	2	/11.7

The manufacturer reserves right to use an equivalent replacement device.

3.b

Kusovník artiklů / Parts list / Stückliste

Označení přístroje Device identification Geräteidentifikation	Typ přístroje Device description Gerätebeschreibung	Objednací číslo Type number Typennummer	Výrobce Manufacturer Hersteller	Skladové číslo Part number Lagernummer	Množství Quantity Menge	Umístění Location Stelle
-SA1	Upevňovací adaptér Mounting adapter Montageadapter	M22-A4	EATON	91.061.045	1	/11.7
-SB1	Hlavice dvoutlačítka bílá/černá start/stop Double button head white/black start/stop Doppelrundkopf weiß/schwarz Start/Stopp	M22-DDL-WS-GB1/GB0	EATON	91.060.034	1	/11.1
-SB1	Upevňovací adaptér + 1NO Attaching adapter + 1NO Montageadapter + 1NO	M22-AK10	EATON	91.061.021	1	/11.1
-SB2	Kontaktní blok - 1NO Contact block - 1NO Kontaktblock - 1NO	M22-K10	EATON	91.061.022	1	/11.2
-SB3	Hlavice dvoutlačítka bílá/černá, zavřít/otevřít Double button head white/black, arrow close/open Doppelrundkopf weiß / schwarz, Pfeil Schließen / Öffnen	M22-DDL-WS-*	EATON	91.060.055	1	/11.2
-SB3	Upevňovací adaptér + 1NO Attaching adapter + 1NO Montageadapter + 1NO	M22-AK10	EATON	91.061.021	1	/11.2
-SB4	Kontaktní blok - 1NO Contact block - 1NO Kontaktblock - 1NO	M22-K10	EATON	91.061.022	1	/11.3
-SB5	Hlavice dvoutlačítka bílá/černá šipka nahoru/dolů Double button head white/black, arrow up/down Doppelrundkopf weiß / schwarz, Pfeil nach oben / unten	M22-DDL-WS-*-*	EATON	91.060.054	1	/11.4
-SB5	Upevňovací adaptér + 1NO Attaching adapter + 1NO Montageadapter + 1NO	M22-AK10	EATON	91.061.021	1	/11.4
-SB6	Kontaktní blok - 1NO Contact block - 1NO Kontaktblock - 1NO	M22-K10	EATON	91.061.022	1	/11.5
-SB7	Upevňovací adaptér + 1NO Attaching adapter + 1NO Montageadapter + 1NO	M22-AK10	EATON	91.061.021	1	/15.6
-SB7	Hlavice prosvětleného tlačítka modrá Blue transparent switch Blau transparent Schalter	M22-DL-B	EATON	91.060.132	1	/15.6

The manufacturer reserves right to use an equivalent replacement device.

3.c

Kusovník artiklů / Parts list / Stückliste

Označení přístroje Device identification Geräteidentifikation	Typ přístroje Device description Gerätebeschreibung	Objednací číslo Type number Typennummer	Výrobce Manufacturer Hersteller	Skladové číslo Part number Lagernummer	Množství Quantity Menge	Umístění Location Stelle
-SB501	Total stop - hlavice + 3xNC Emergency-stop mushroom push - button + 3xNC Not-Aus-Pilz - Taster + 3 xNC	YW1B-V4E02R	IDEC	91.060.084	1	/15.4
-SB501	Kontakt - 1x NC Contact - 1x NC Kontakt - 1x NC	YW-E01	IDEC	91.061.054	1	/15.4
-TR1	Toroidní transformátor - 400V/230V/20V 4,5A 90VA Toroidal transformer - 400V / 230V / 20V 4,5A 90VA Ringkerntransformator - 400V / 230V / 20V 4,5A 90VA	400V/230V/20V 4,5A 90VA	KARBAN s.r.o.	91.080.023	1	/7.6
-SQ21	Bezpečnostní koncový spínač - 2xNC Safety Limit Switch - 2x NC Sicherheitsendschalter - 2x NC	QKS8	KEDU	91.173.012	1	/15.4
-PA1	Pojistka válcová - 2A, 10x38, pomalá Tube fuse - 2A, 10x38, slow Rohrsicherung - 2A, 10x38, langsam	PV10 2A gG	OEZ	91.230.034	2	/7.5
-PA2	Pojistkový odpínač pro válcové vložky - 3P Switch fuse for the cylinder inserts - 3P Schalter Sicherung für den Zylindereinsätze - 3P	E 93/32	ABB	91.241.014	1	/9.1
-PA2	Pojistka válcová - 25A, 10x38, rychlá Tube fuse - 25A, 10x38, fast Rohrsicherung - 25A, 10x38, schnell	PV10 25A gG	OEZ	91.230.021	1	/9.1
-SQ4	Koncový spínač - 1NC+1NO Limit switch - 1NC+1NO Endschalter - 1NC+1NO	D4N-4A31	OMRON	91.173.007	1	/12.7
-SQ4	Koncový spínač - 1NC+1NO, M20, pomalý Limit switch - 1NC+1NO, M20, slow Endschalter -1NC+1NO, M20, langsam	D4N-4A32	OMRON	91.173.010	1	/12.7
-SQ1	Koncový spínač - 1NO + 1NC, kladka, pomalá akce Limit switch - 1NO + 1NC, pulley, slow action Endschalter - 1NO + 1NC, rolle, langsame Einwirkung	FR 605-M2	PIZZATO	91.173.009	1	/12.3
-SQ2	Koncový spínač - 1NO + 1NC, kladka, pomalá akce Limit switch - 1NO + 1NC, pulley, slow action Endschalter - 1NO + 1NC, rolle, langsame Einwirkung	FR 615-M2	PIZZATO	91.173.044	1	/12.4
-SQ3	Koncový spínač - 1NO + 1NC, dlouhá nastavitelná kladka, M2, snap action Limit switch - 1NO + 1NC, long adjustable pulley, M2, snap action Endschalter - 1NO + 1NC, lange verstellbare rolle, M2, schnapp	FR 655-M2	PIZZATO	91.173.045	1	/12.6

The manufacturer reserves right to use an equivalent replacement device.

3.d

Kusovník artiklů / Parts list / Stückliste

Označení přístroje Device identification Geräteidentifikation	Typ přístroje Device description Gerätebeschreibung	Objednací číslo Type number Typennummer	Výrobce Manufacturer Hersteller	Skladové číslo Part number Lagernummer	Množství Quantity Menge	Umístění Location Stelle
-FM1	Frekvenční měnič - 3.7kW, 3x230VAC Frequency converter - 3.7kW, 3x230VAC Frequenzumrichter - 3.7 kW, 3x230VAC	VFD17AME23ANNAA	DELTA ELECTRONICS, INC.	91.012.196	1	/9.1
-M1	Čerpadlo chlazení 120W Cooling pump 120W Kühlpumpe 120W	PA70/120	SAP srl	91.020.032	1	/7.4
-+R2	PS 41x89x74mm - šedá PS 41x89x74mm - grey PS 41x89x74mm - grau	Z54	SOS Electronic, spol. s r.o.	91.190.036	1	/16.4
-+R10.4	PS 41x89x74mm - šedá PS 41x89x74mm - grey PS 41x89x74mm - grau	Z54	SOS Electronic, spol. s r.o.	91.190.036	1	/17.6
-+R2	Svorka Clamp Klemmen	WAGO.260-301	WAGO	91.250.008	1	/16.4
-+R2	Koncová bočnice End side Endseite	WAGO.260-361	WAGO	91.252.003	1	/16.4
-+R10.4	Svorka Clamp Klemmen	WAGO.260-301	WAGO	91.250.008	1	/17.6
-+R10.4	Koncová bočnice End side Endseite	WAGO.260-361	WAGO	91.252.003	1	/17.6
-RCF0	Odrušovací filtr 25A Noise filter 25A Rauschfilter 25A	25EB15/50/C2	WIDECOM TECHNOLOGY s.r.o.	91.041.063	1	/9.1
-FU1	Svorka pojistková Fuse terminal Sicherungsklemme	WK4/THSi5U	WIELAND	91.251.102	1	/7.8
-M5	Ventilátor 24VDC, 154CFM Fan 24VDC, 154CFM Fan 24VDC, 154CFM	RDH1238 B2	Xinruilian Electronic Co.	91.015.126	1	/9.8

The manufacturer reserves right to use an equivalent replacement device.

3.e

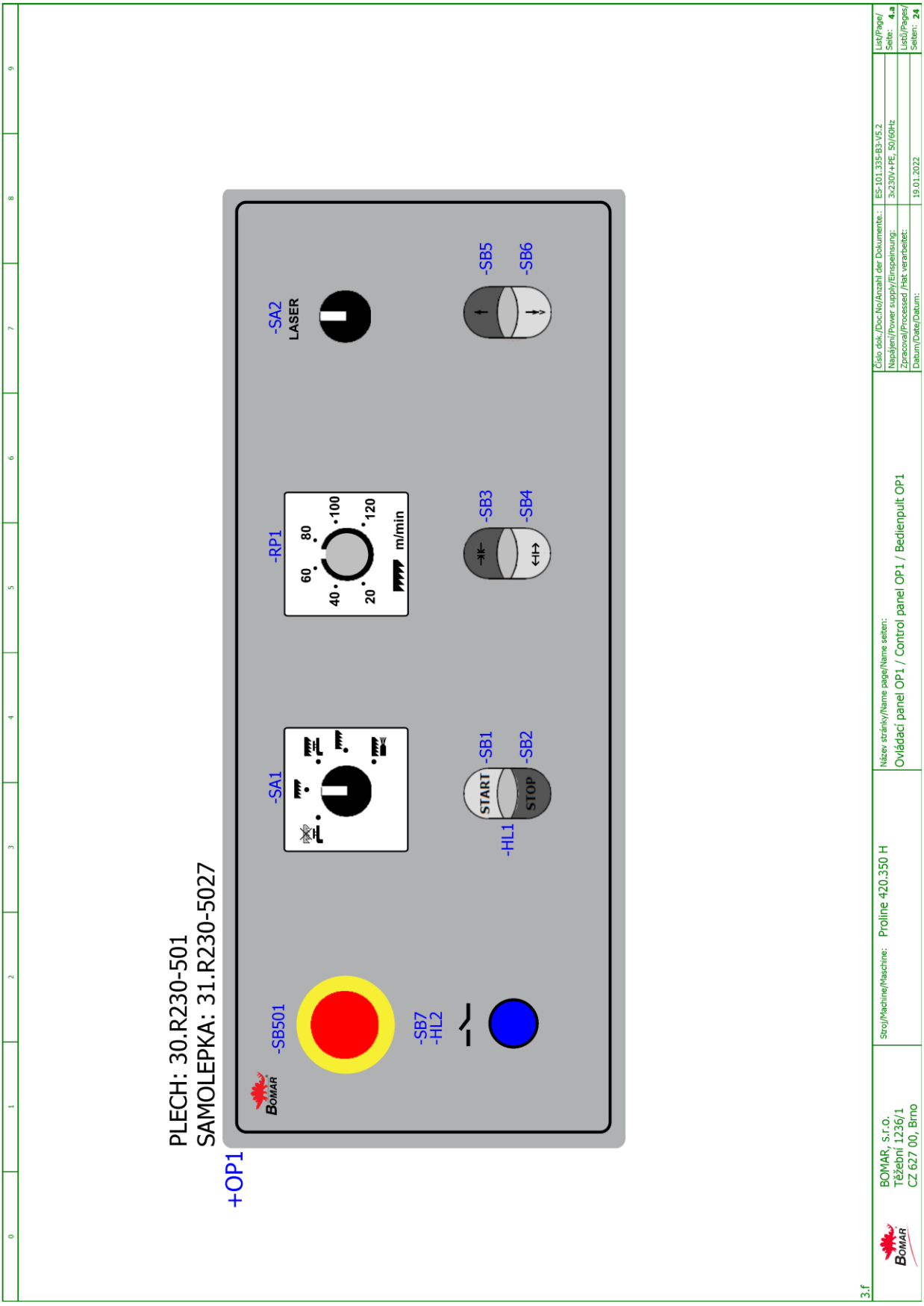
PLECH: 30.R230-501
SAMOLEPKA: 31.R230-5027
+OP1
-SB501
-SB7
-HL2
-SA1
-HL1
START
-SB1
STOP
-SB2
-RP1
20
40
60
80
100
120
m/min
-SB3
-SB4
-SA2
LASER
-SB5
-SB6
BOMAR, s.r.o.
Těžební 1236/1
CZ 627 00, Brno
Stroj/Machine/Maschine: Proline 420.350 H
Název stránky/Name page/Name seiten:
Ovládací panel OP1 / Control panel OP1 / Bedienpult OP1
Číslo dok./Doc.No/Anzahl der Dokumente: ES-101.335-B3-V5.2
Napájení/Power supply/Einspeinsung: 3x230V+PE, 50/60Hz
Zpracoval/Processed /Hat verarbeitet:
Datum/Date/Datum: 19.01.2022
List/Page/Seite: 4.a
Listů/Pages/Seiten: 24
3.f

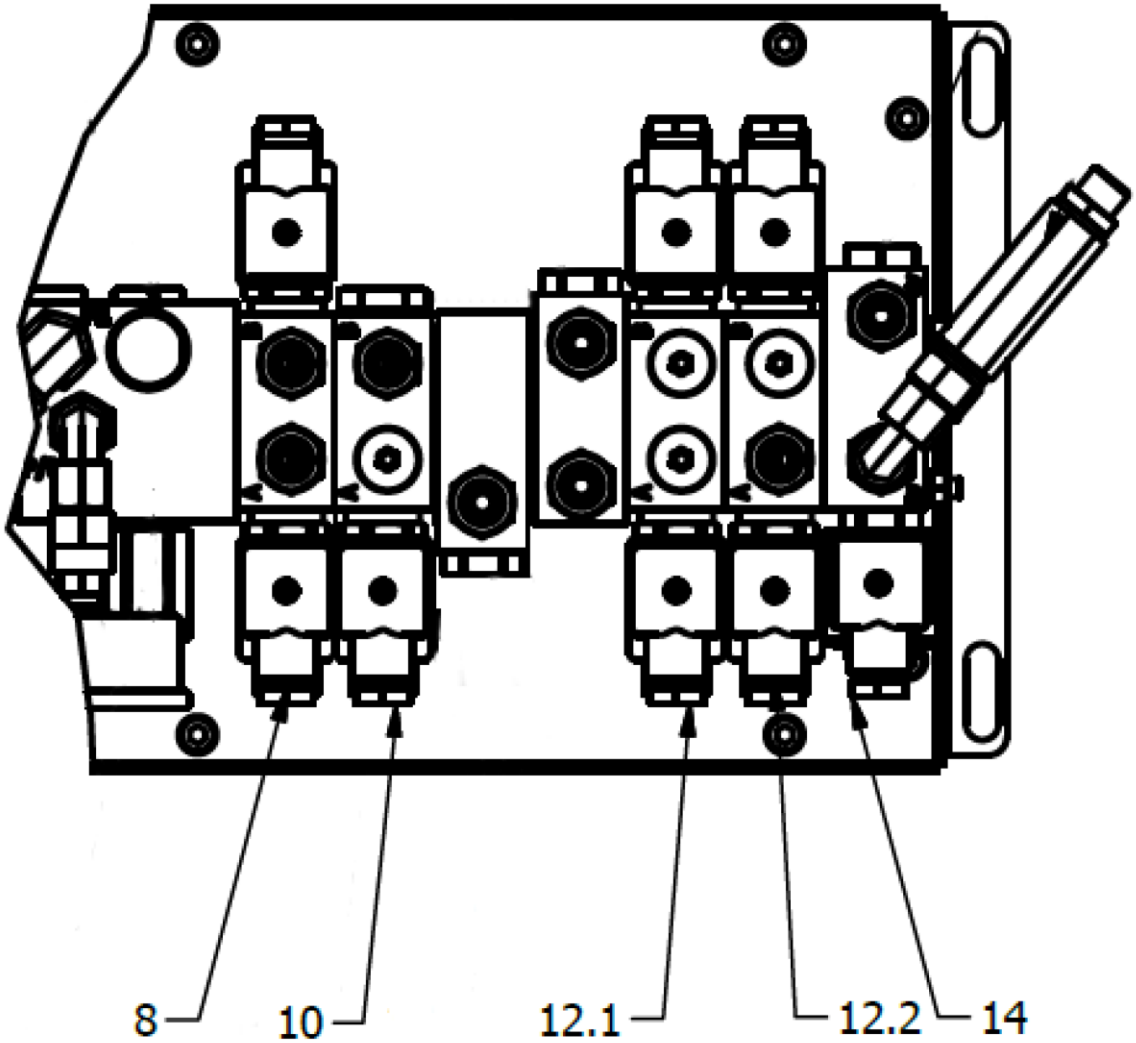

HV8	A	Svěrák upnout Vice clamp Schraubstock spannen
	B	Svěrák povolit Release vice Schraubstock lösen
HV10		Nezapojeno Not connected Nicht angeschlossen
HV12.1		Nezapojeno Not connected Nicht angeschlossen
HV12.2	A	Rameno dolů Arm down Rahmen nach unten
	B	Rameno nahoru Arm up Rahmen nach oben
HV14	A	Rameno rychle dolů Arm quickly down Rahmen schnell nach unten

4.a

BOMAR, s.r.o. Těžební 1236/1 CZ 627 00, Brno	Stroj/Machine/Maschine: Proline 420.350 H	Název stránky/Name page/Name seiten: Rozmístění hydraulických ventilů / Placement of Hydraulic valves / Platzierung die Hydroventile	Číslo dok./Doc.No/Anzahl der Dokumente.: ES-101.335-B3-V5.2 Napájení/Power supply/Einspeisung: 3x230V+PE, 50/60Hz Zpracoval/Processed /Hat verarbeitet: Datum/Date/Datum: 19.01.2022	List/Page/Seite: 5 Listů/Pages/Seiten: 24

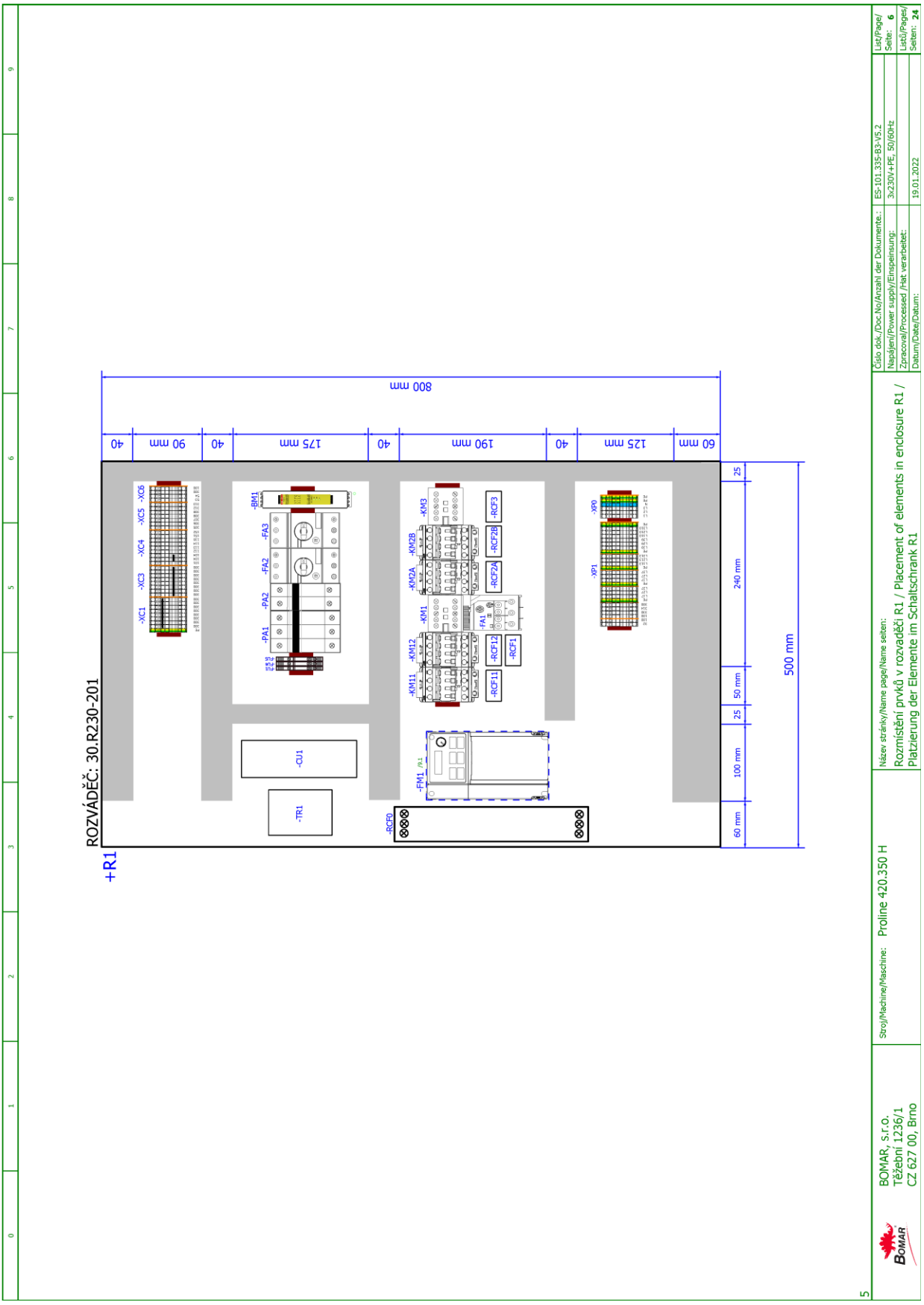

BOMAR, s.r.o.
Těžební 1236/1
CZ 627 00, Brno

Stroj/Machine/Maschine: Proline 420.350 H

Název stránky/Name page/Name seiten:
Rozmístění prvků v rozváděči R1 / Placement of elements in enclosure R1 / Platzierung der Elemente im Schaltschrank R1

Číslo dok./Doc.No/Anzahl der Dokumente.: ES-101.335-B3-V5.2
Napájení/Power supply/Einspeinsung: 3x230V+PE, 50/60Hz
Zpracoval/Processed /Hat verarbeitet:
Datum/Date/Datum: 19.01.2022

List/Page/Seite: 6
Listů/Pages/Seiten: 24

5

Schémata
Schemas
Schematics

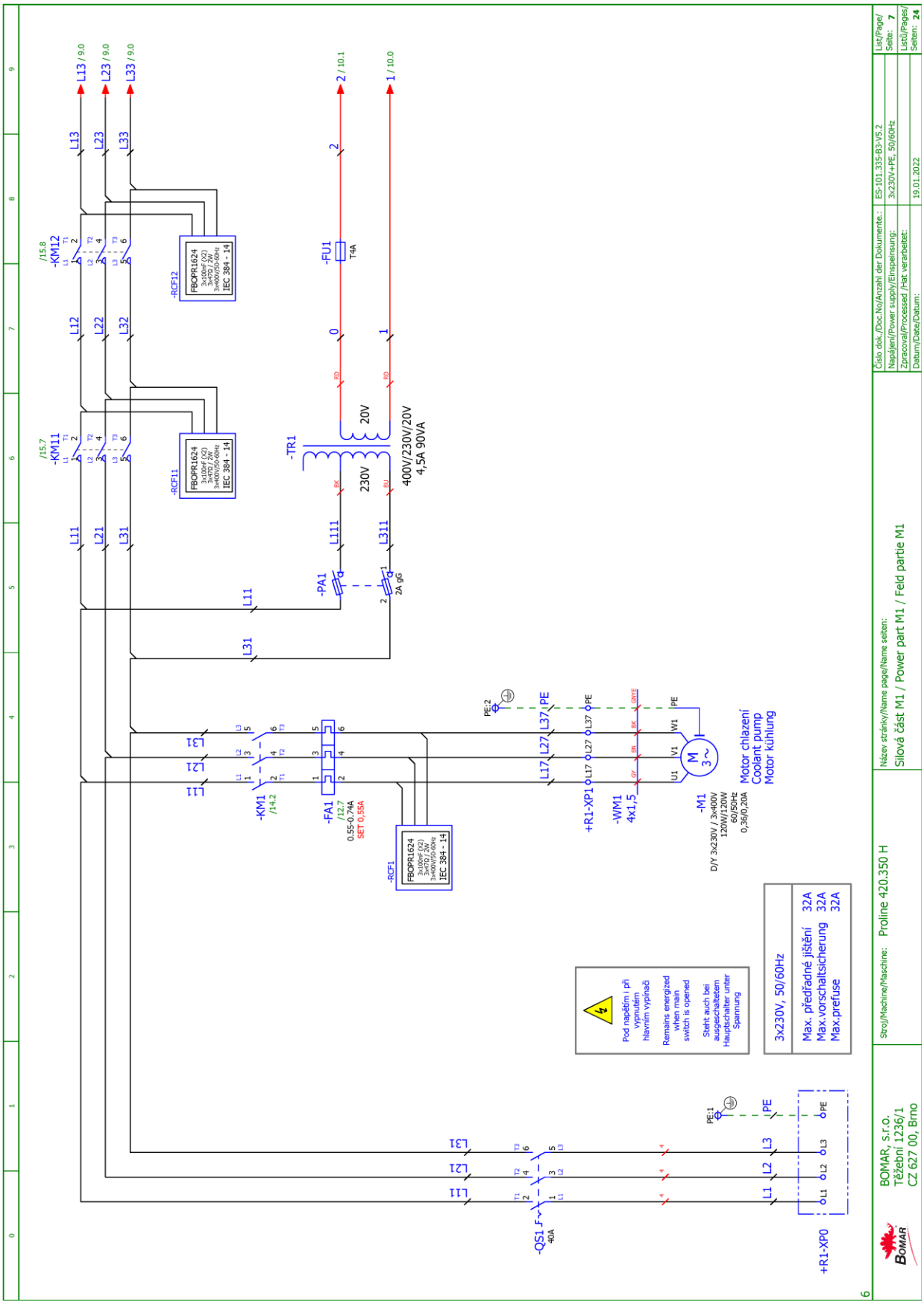

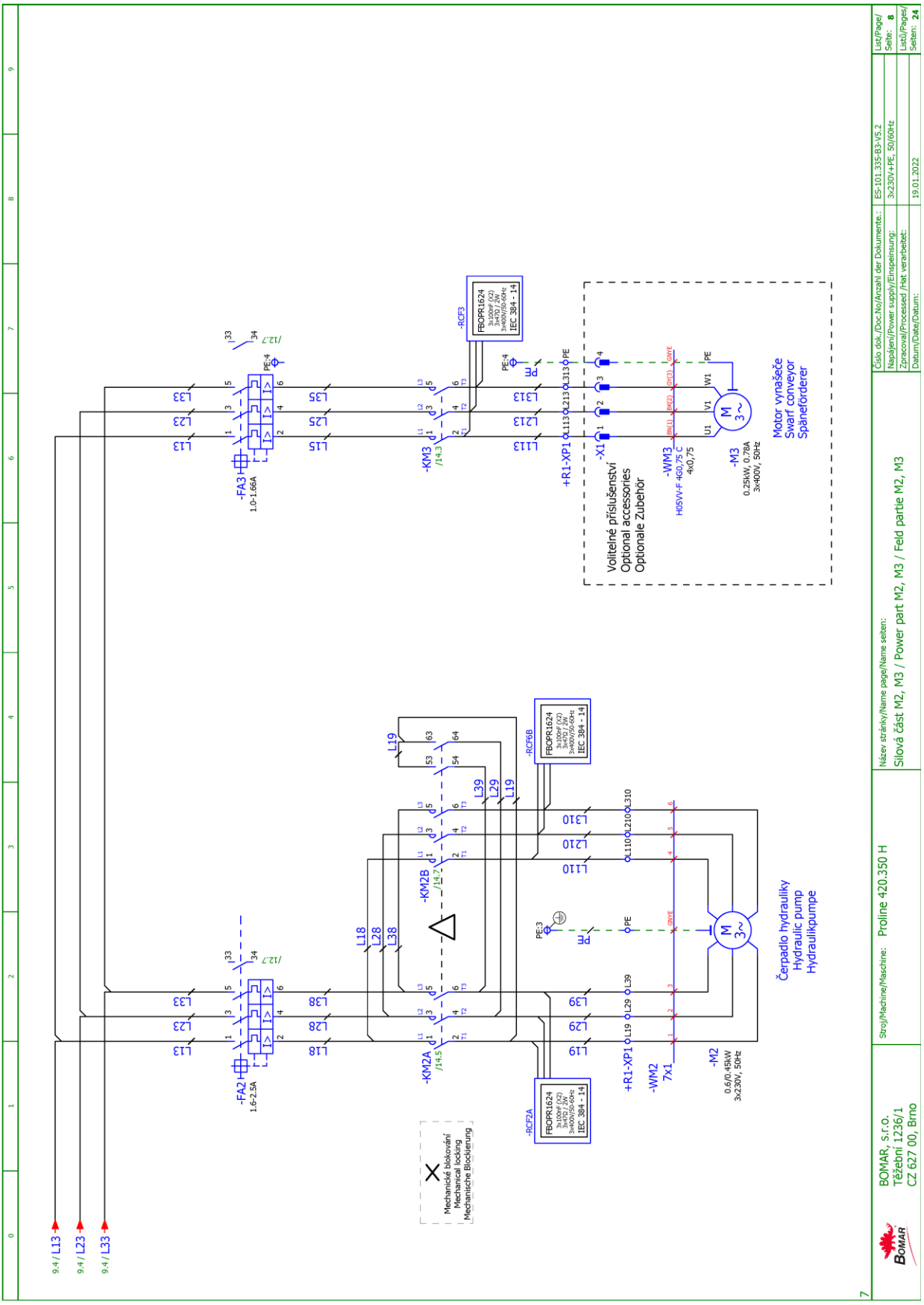
9.4 / L13
9.4 / L23
9.4 / L33
-FA2
1.6-2.5A
-FA3
1.0-1.66A
-KM2A
-KM2B
-KM3
-RCF2A
-RCF6B
-RCF3
FBOPR1624
IEC 384 - 14
Mechanické blokování
Mechanical locking
Mechanische Blockierung
+R1-XP1
-WM2
7x1
-M2
0,6/0,45kW
3x230V, 50Hz
Čerpadlo hydrauliky
Hydraulic pump
Hydraulikpumpe
-X1
Volitelné příslušenství
Optional accessories
Optionale Zubehör
-WM3
H05VV-F 4G0,75 C
4x0,75
-M3
0,25kW, 0,78A
3x400V, 50Hz
Motor vynašeče
Swarf conveyor
Späneförderer
BOMAR, s.r.o.
Těžební 1236/1
CZ 627 00, Brno
Stroj/Machine/Maschine: Proline 420.350 H
Název stránky/Name page/Name seiten:
Silová část M2, M3 / Power part M2, M3 / Feld partie M2, M3
Číslo dok./Doc.No/Anzahl der Dokumente: ES-101.335-B3-V5.2
Napájení/Power supply/Einspeinsung: 3x230V+PE, 50/60Hz
Zpracoval/Processed /Hat verarbeitet:
Datum/Date/Datum: 19.01.2022
List/Page/Seite: 8
Listů/Pages/Seiten: 24

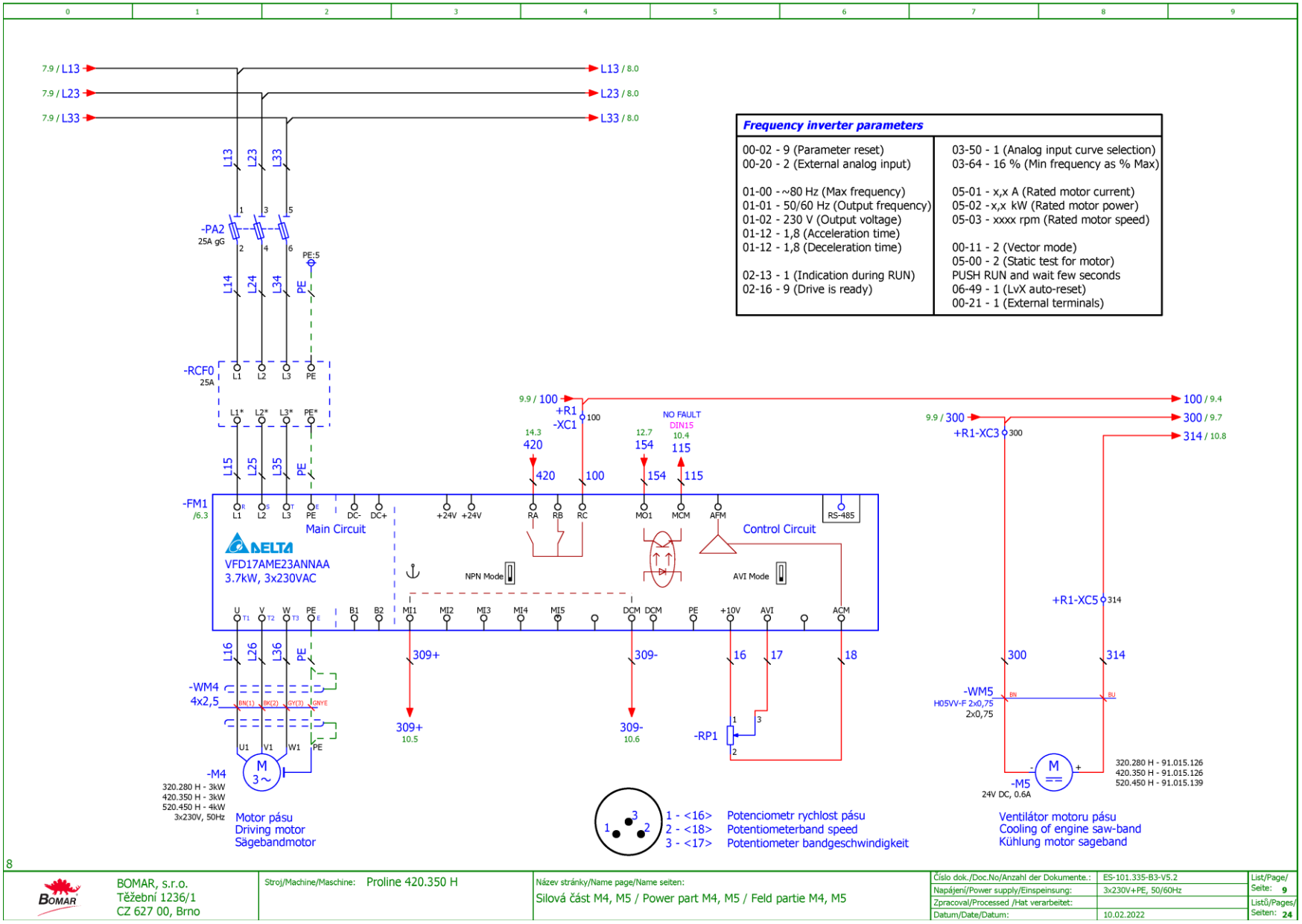

Frequency inverter parameters	
00-02 - 9 (Parameter reset) 00-20 - 2 (External analog input)	03-50 - 1 (Analog input curve selection) 03-64 - 16 % (Min frequency as % Max)
01-00 - ~80 Hz (Max frequency) 01-01 - 50/60 Hz (Output frequency) 01-02 - 230 V (Output voltage) 01-12 - 1,8 (Acceleration time) 01-12 - 1,8 (Deceleration time)	05-01 - x,x A (Rated motor current) 05-02 - x,x kW (Rated motor power) 05-03 - xxxx rpm (Rated motor speed)
02-13 - 1 (Indication during RUN) 02-16 - 9 (Drive is ready)	00-11 - 2 (Vector mode) 05-00 - 2 (Static test for motor) PUSH RUN and wait few seconds 06-49 - 1 (LvX auto-reset) 00-21 - 1 (External terminals)

Schémata
Schemas
Schematics

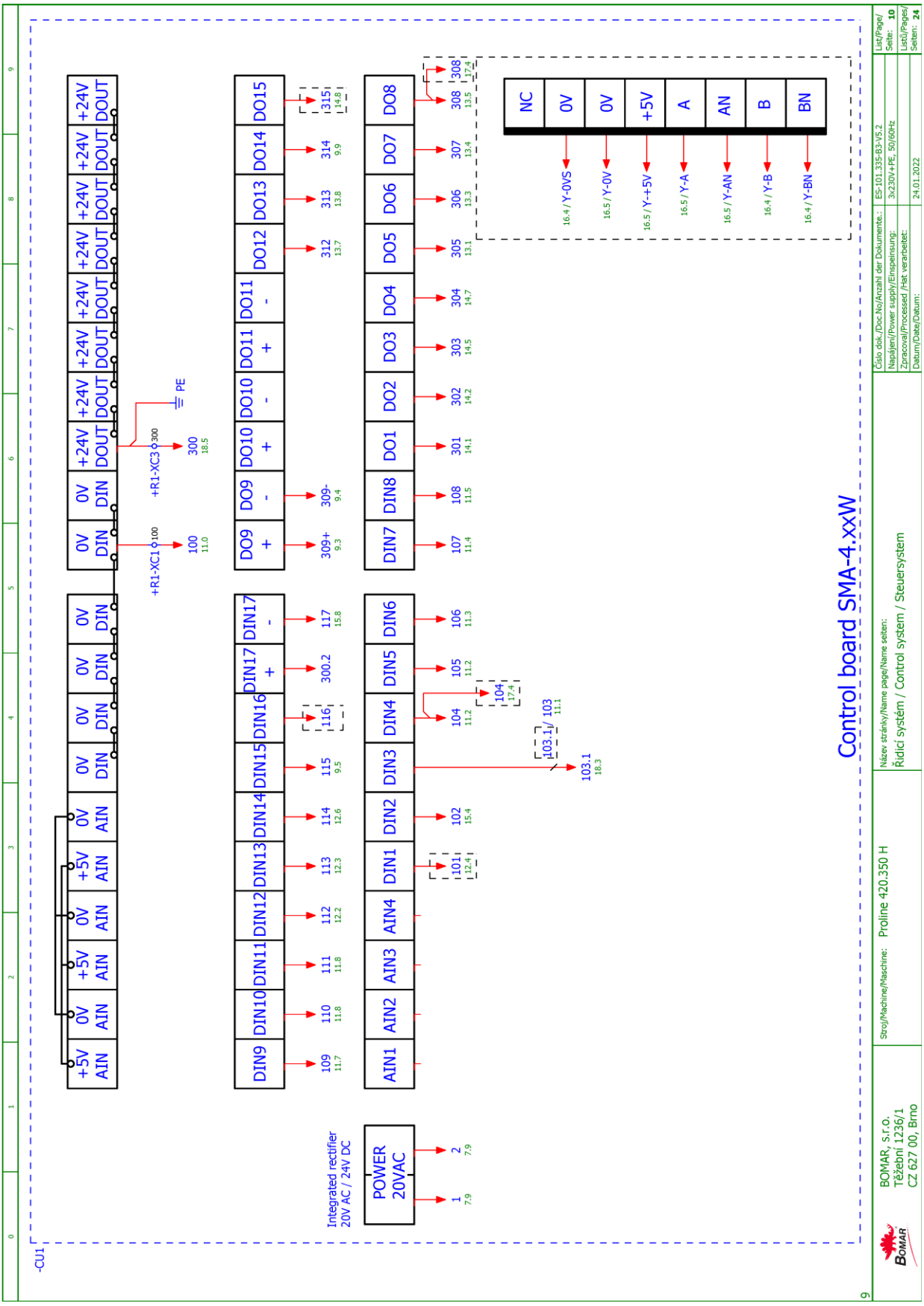
Control board SMA-4.xxW
-CU1
Integrated rectifier
20V AC / 24V DC
POWER
20VAC
AIN1 AIN2 AIN3 AIN4 DIN1 DIN2 DIN3 DIN4 DIN5 DIN6
DIN7 DIN8 DO1 DO2 DO3 DO4 DO5 DO6 DO7 DO8
DIN9 DIN10 DIN11 DIN12 DIN13 DIN14 DIN15 DIN16 DIN17 DIN17
DO9 DO9 DO10 DO10 DO11 DO11 DO12 DO13 DO14 DO15
+5V AIN +5V AIN 0V AIN 0V AIN 0V AIN 0V AIN 0V DIN 0V DIN 0V DIN 0V DIN 0V DIN 0V DIN
+24V DOUT +24V DOUT +24V DOUT +24V DOUT +24V DOUT +24V DOUT
NC 0V 0V +5V A AN B BN
16.4 / Y-0VS
16.5 / Y-0V
16.5 / Y-+5V
16.5 / Y-A
16.5 / Y-AN
16.4 / Y-B
16.4 / Y-BN
+R1-XC1
+R1-XC3
PE
BOMAR, s.r.o.
Těžební 1236/1
CZ 627 00, Brno
Stroj/Machine/Maschine: Proline 420.350 H
Název stránky/Name page/Name seiten:
Řídicí systém / Control system / Steuersystem
Číslo dok./Doc.No/Anzahl der Dokumente: ES-101.335-B3-V5.2
Napájení/Power supply/Einspeinsung: 3x230V+PE, 50/60Hz
Zpracoval/Processed /Hat verarbeitet:
Datum/Date/Datum: 24.01.2022
List/Page/Seite: 10
Listů/Pages/Seiten: 24

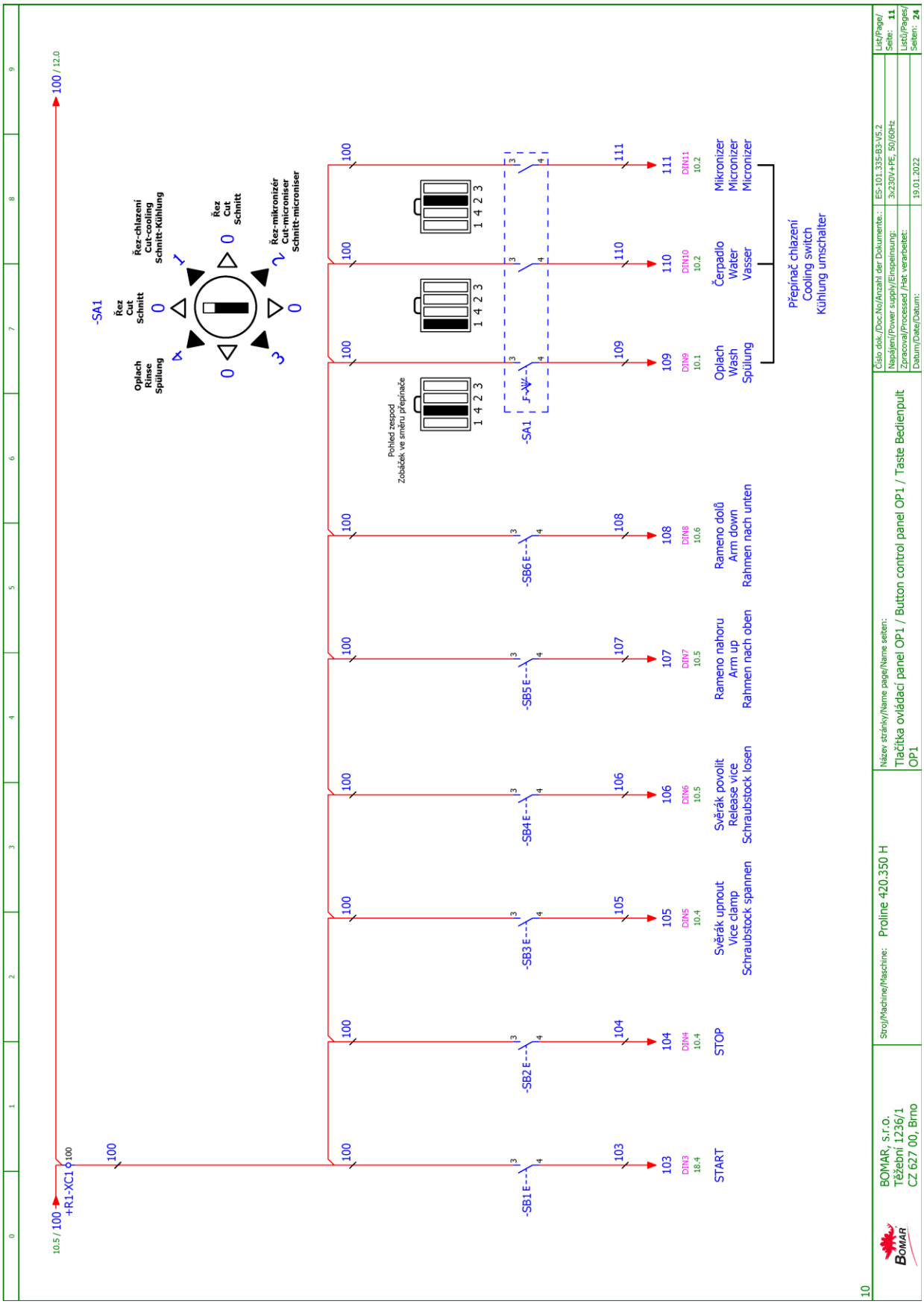

Schémata
Schemas
Schematics

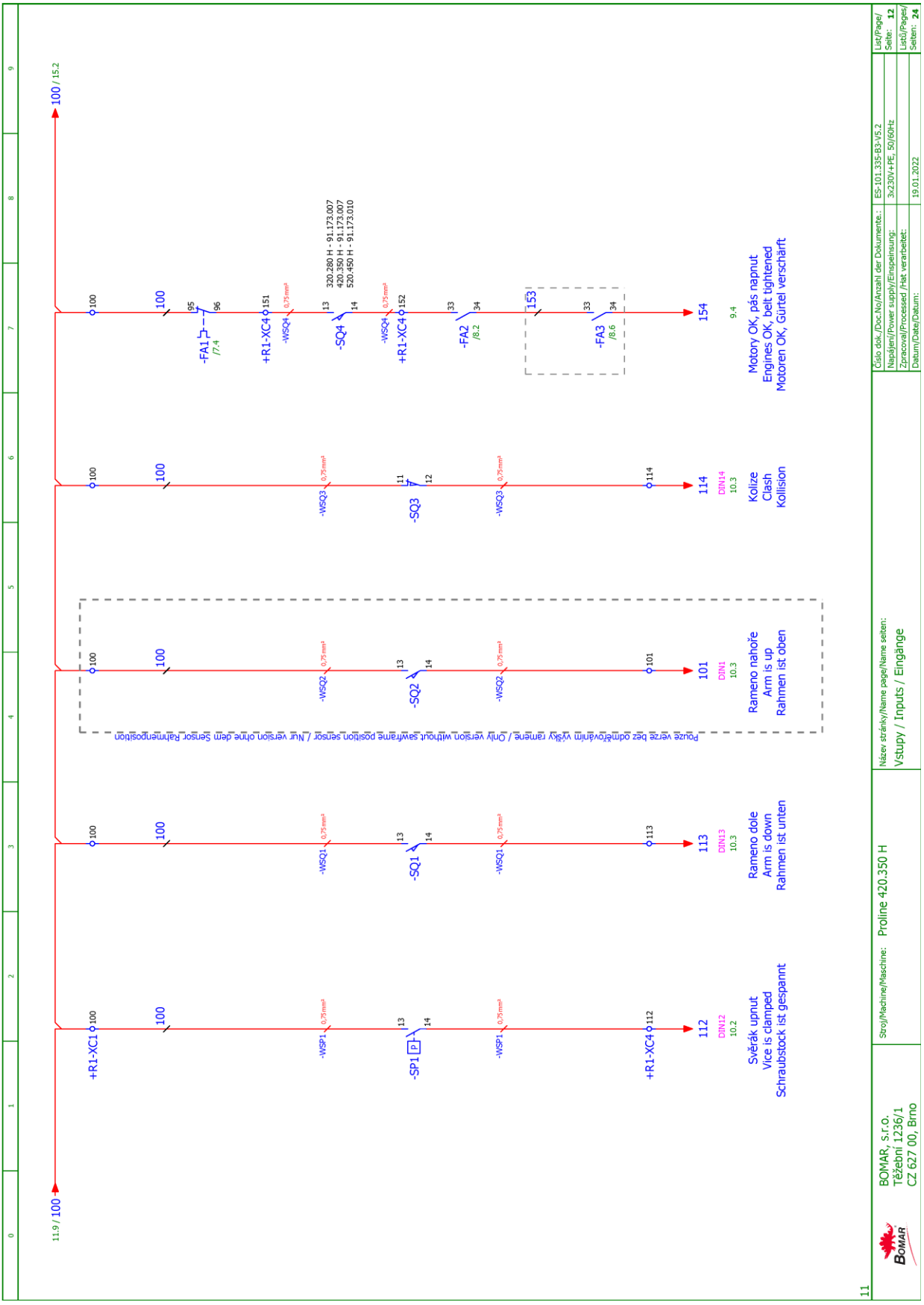
11.9 / 100
100 / 15.2
+R1-XC1
-SP1
-SQ1
-SQ2
-SQ3
-SQ4
-FA1
-FA2
-FA3
+R1-XC4
-WSP1
-WSQ1
-WSQ2
-WSQ3
-WSQ4
Svěrák upnut
Vice is clamped
Schraubstock ist gespannt
Rameno dole
Arm is down
Rahmen ist unten
Rameno nahoře
Arm is up
Rahmen ist oben
Kolize
Clash
Kollision
Motory OK, pás napnut
Engines OK, belt tightened
Motoren OK, Gürtel verschärft
Použe verze bez odměřovátím vyšší ramene / Only version without swframe position sensor / Nur version ohne dem Sensor Rahmenposition
BOMAR, s.r.o.
Těžební 1236/1
CZ 627 00, Brno
Stroj/Machine/Maschine: Proline 420.350 H
Název stránky/Name page/Name seiten:
Vstupy / Inputs / Eingänge
Číslo dok./Doc.No/Anzahl der Dokumente: ES-101.335-B3-V5.2
Napájení/Power supply/Einspeinsung: 3x230V+PE, 50/60Hz
Zpracoval/Processed /Hat verarbeitet:
Datum/Date/Datum: 19.01.2022
List/Page/Seite: 12
Listů/Pages/Seiten: 24

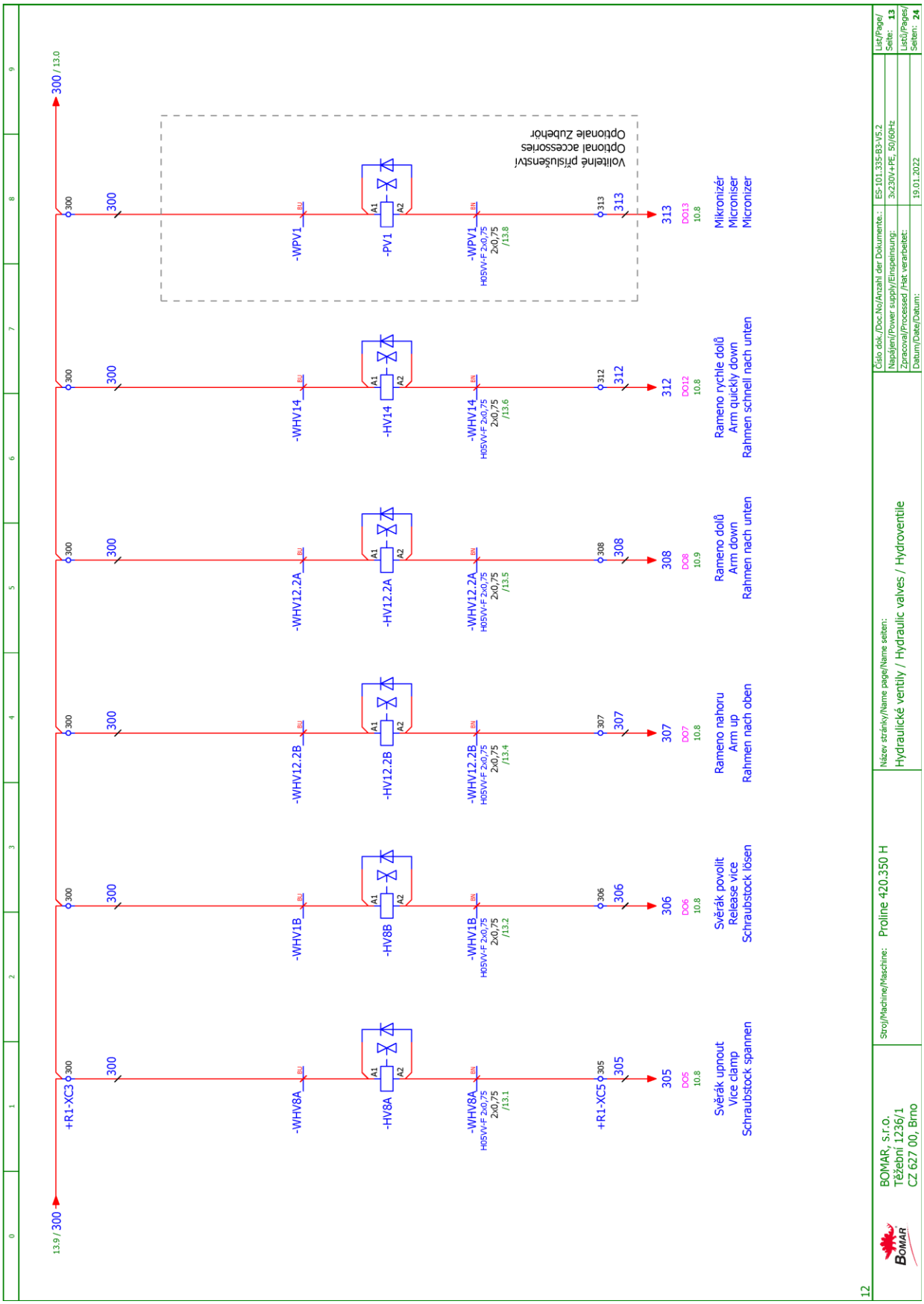

Schémata
Schemas
Schematics

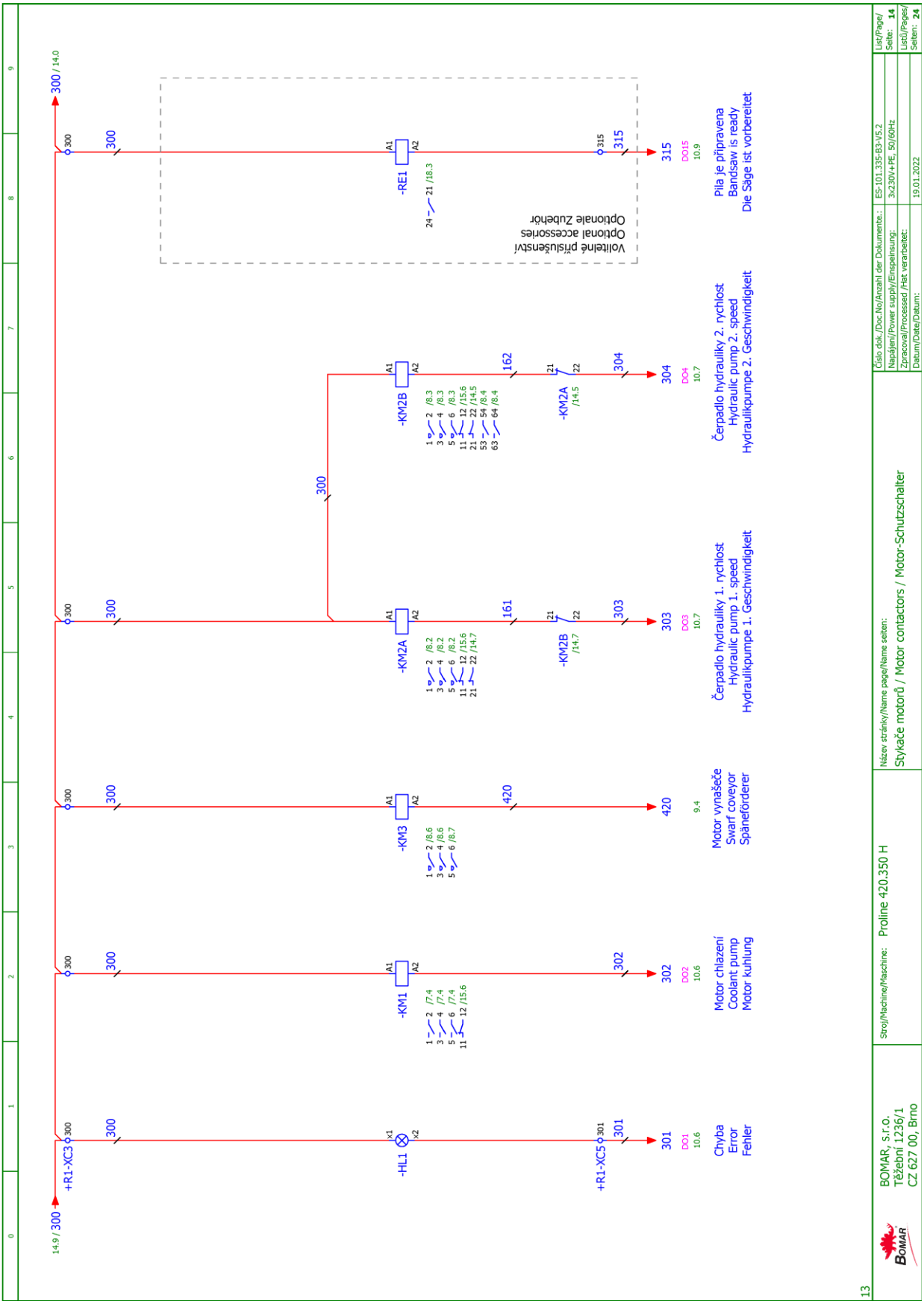
14.9 / 300
+R1-XC3
-HL1
Chyba
Error
Fehler
301
DO1
10.6
+R1-XC5
-KM1
Motor chlazení
Coolant pump
Motor kuhlung
302
DO2
10.6
-KM3
Motor vynašeče
Swarf coveyor
Späneförderer
420
9.4
-KM2A
Čerpadlo hydrauliky 1. rychlost
Hydraulic pump 1. speed
Hydraulikpumpe 1. Geschwindigkeit
303
DO3
10.7
-KM2B
Čerpadlo hydrauliky 2. rychlost
Hydraulic pump 2. speed
Hydraulikpumpe 2. Geschwindigkeit
304
DO4
10.7
-RE1
Volitelné příslušenství
Optional accessories
Optionale Zubehör
315
DO15
10.9
Pila je připravena
Bandsaw is ready
Die Säge ist vorbereitet
300 / 14.0
BOMAR, s.r.o.
Těžební 1236/1
CZ 627 00, Brno
Stroj/Machine/Maschine: Proline 420.350 H
Název stránky/Name page/Name seiten:
Stykače motorů / Motor contactors / Motor-Schutzschalter
Číslo dok./Doc.No/Anzahl der Dokumente: ES-101.335-B3-V5.2
Napájení/Power supply/Einspeinsung: 3x230V+PE, 50/60Hz
Zpracoval/Processed /Hat verarbeitet:
Datum/Date/Datum: 19.01.2022
List/Page/Seite: 14
Listů/Pages/Seiten: 24
13

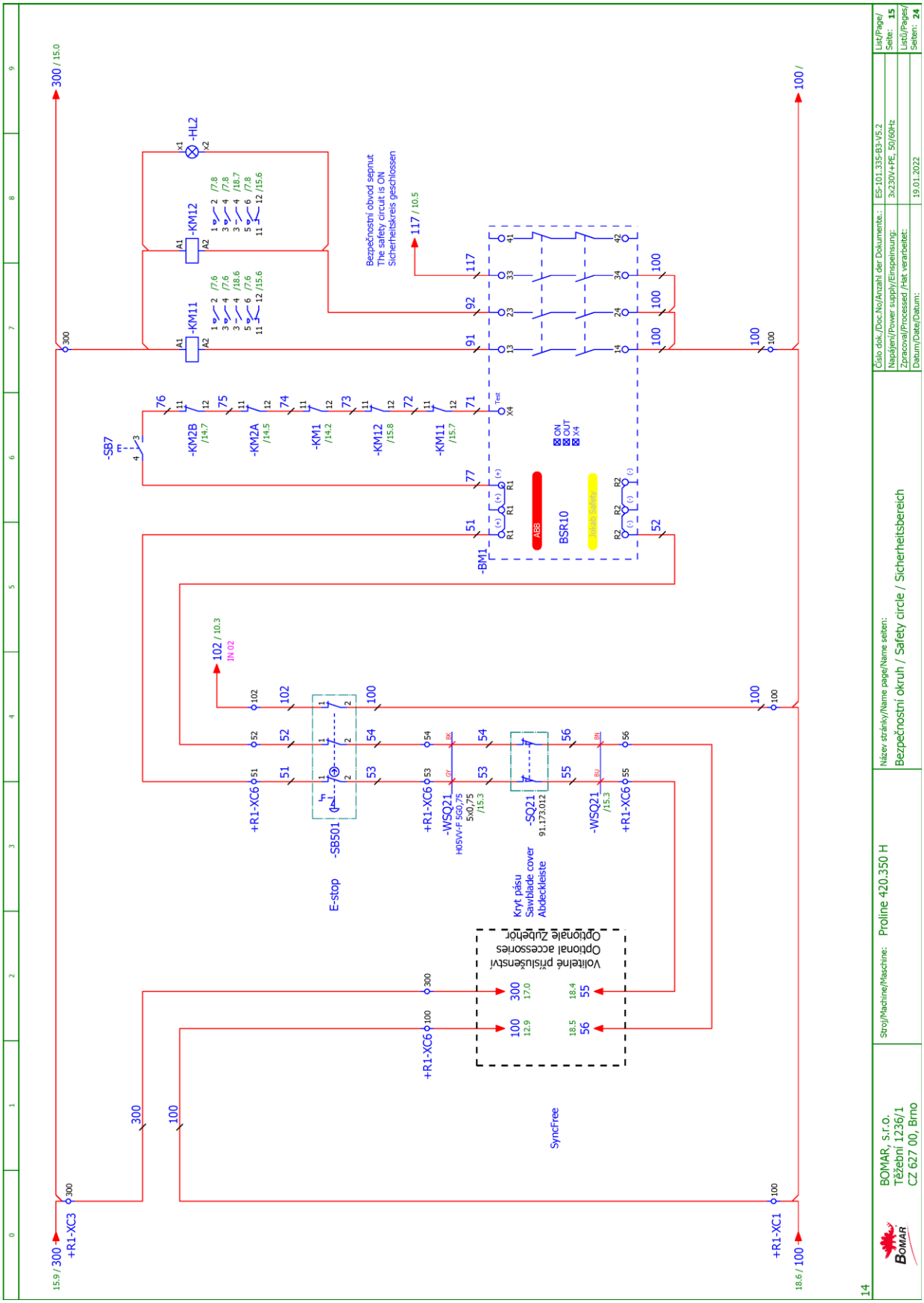

Schémata
Schemas
Schematics

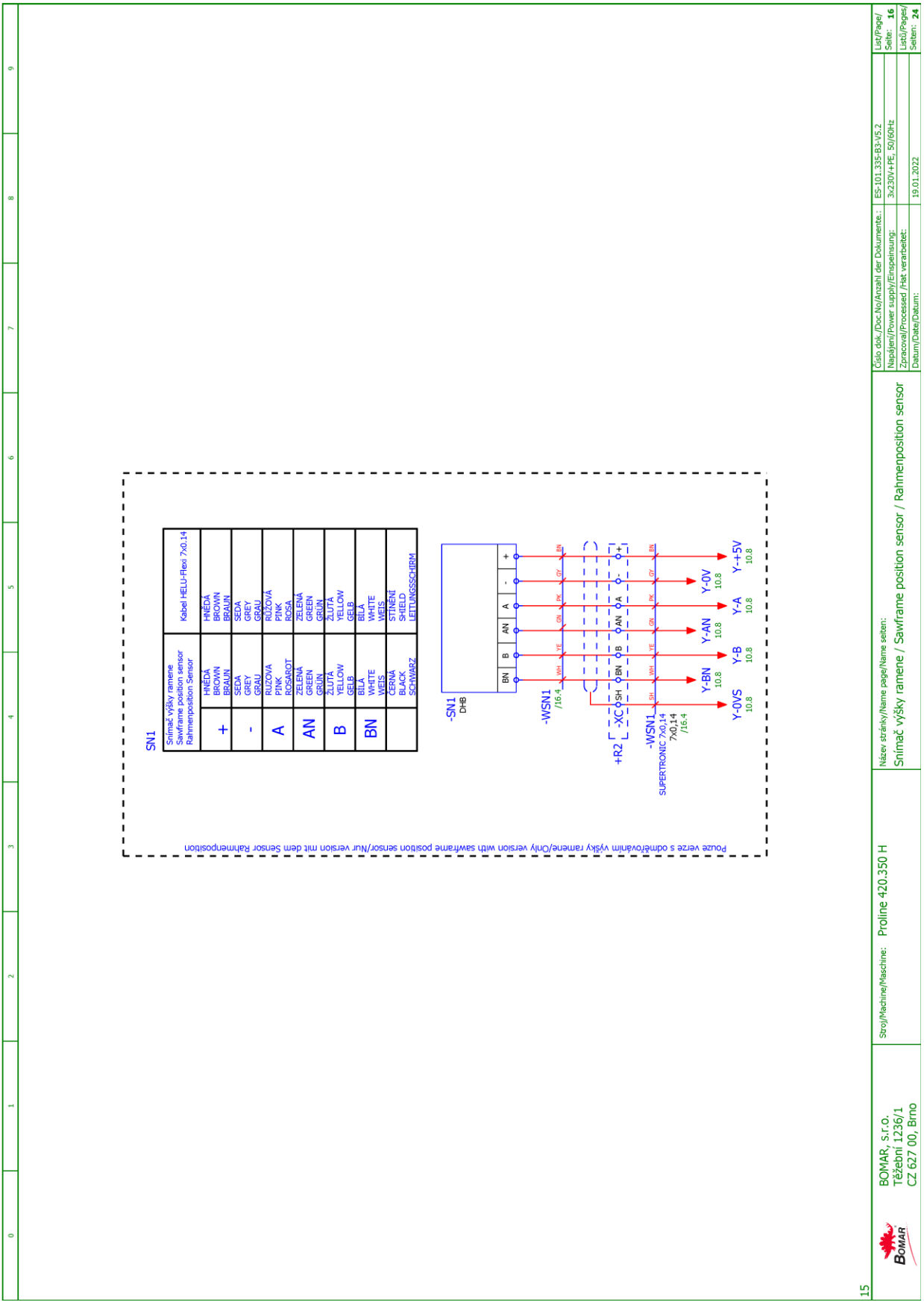
Použe verze s odměřováním výšky ramene/Only version with sawframe position sensor/Nur version mit dem Sensor Rahmenposition
SN1
Snímač výšky ramene
Sawframe position sensor
Rahmenposition Sensor
Kabel HELU-Flexi 7x0.14
+ HNĚDÁ BROWN BRAUN HNĚDÁ BROWN BRAUN
- ŠEDÁ GREY GRAU ŠEDÁ GREY GRAU
A RŮŽOVÁ PINK ROSA RŮŽOVÁ PINK ROSA
AN ZELENÁ GREEN GRÜN ZELENÁ GREEN GRÜN
B ŽLUTÁ YELLOW GELB ŽLUTÁ YELLOW GELB
BN BÍLÁ WHITE WEIS BÍLÁ WHITE WEIS
ČERNÁ BLACK SCHWARZ STÍNĚNÍ SHIELD LEITUNGSSCHIRM
-SN1
DHB
BN B AN A - +
-WSN1
/16.4
+R2
-XC
SH BN B AN A - +
-WSN1
SUPERTRONIC 7x0.14
7x0.14
/16.4
Y-0VS 10.8
Y-BN 10.8
Y-B 10.8
Y-AN 10.8
Y-A 10.8
Y-0V 10.8
Y-+5V 10.8
BOMAR, s.r.o.
Těžební 1236/1
CZ 627 00, Brno
Stroj/Machine/Maschine: Proline 420.350 H
Název stránky/Name page/Name seiten:
Snímač výšky ramene / Sawframe position sensor / Rahmenposition sensor
Číslo dok./Doc.No/Anzahl der Dokumente: ES-101.335-B3-V5.2
List/Page/Seite: 16
Napájení/Power supply/Einspeinsung: 3x230V+PE, 50/60Hz
Listů/Pages/Seiten: 24
Zpracoval/Processed /Hat verarbeitet:
Datum/Date/Datum: 19.01.2022
15

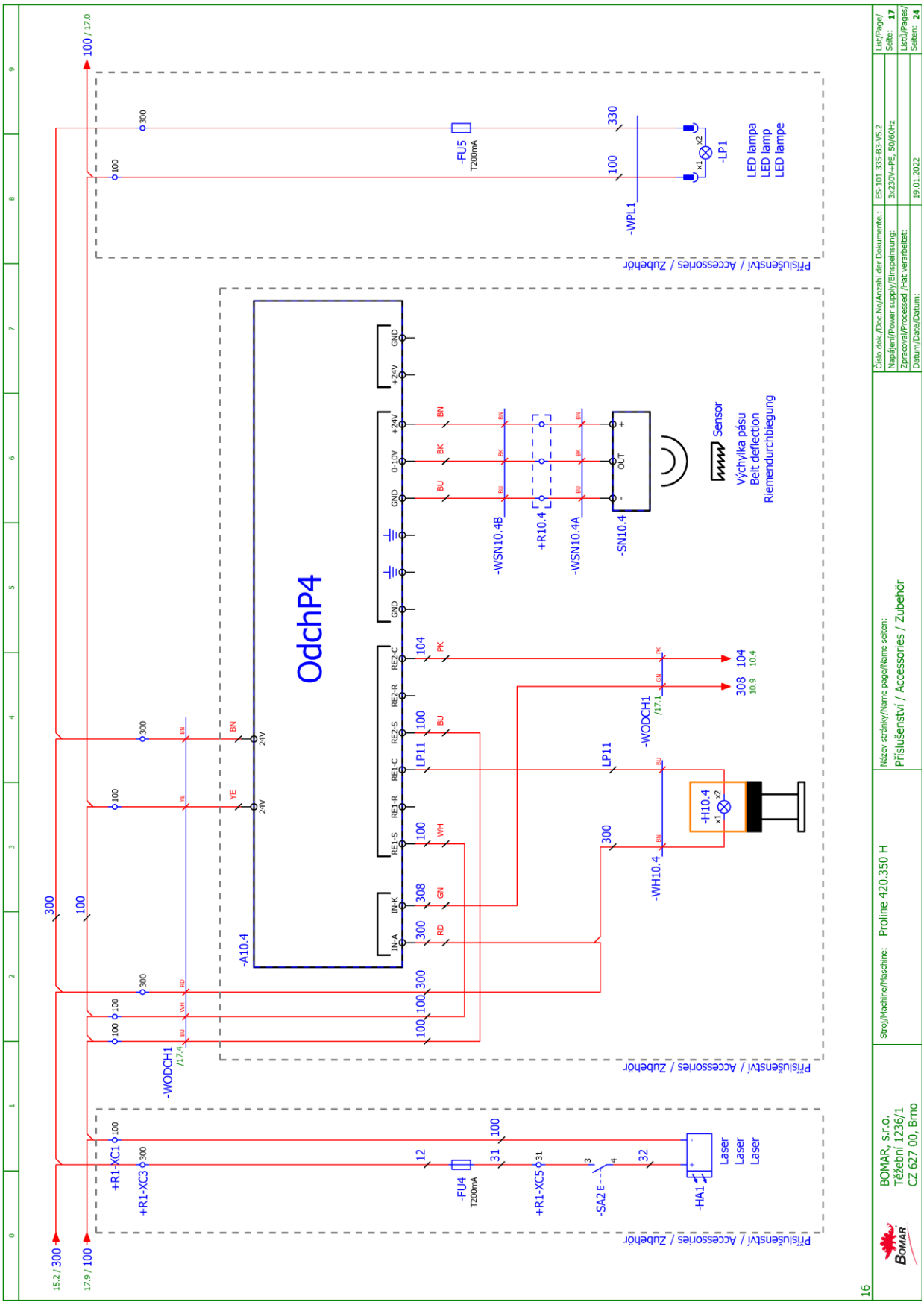

Schémata
Schemas
Schematics

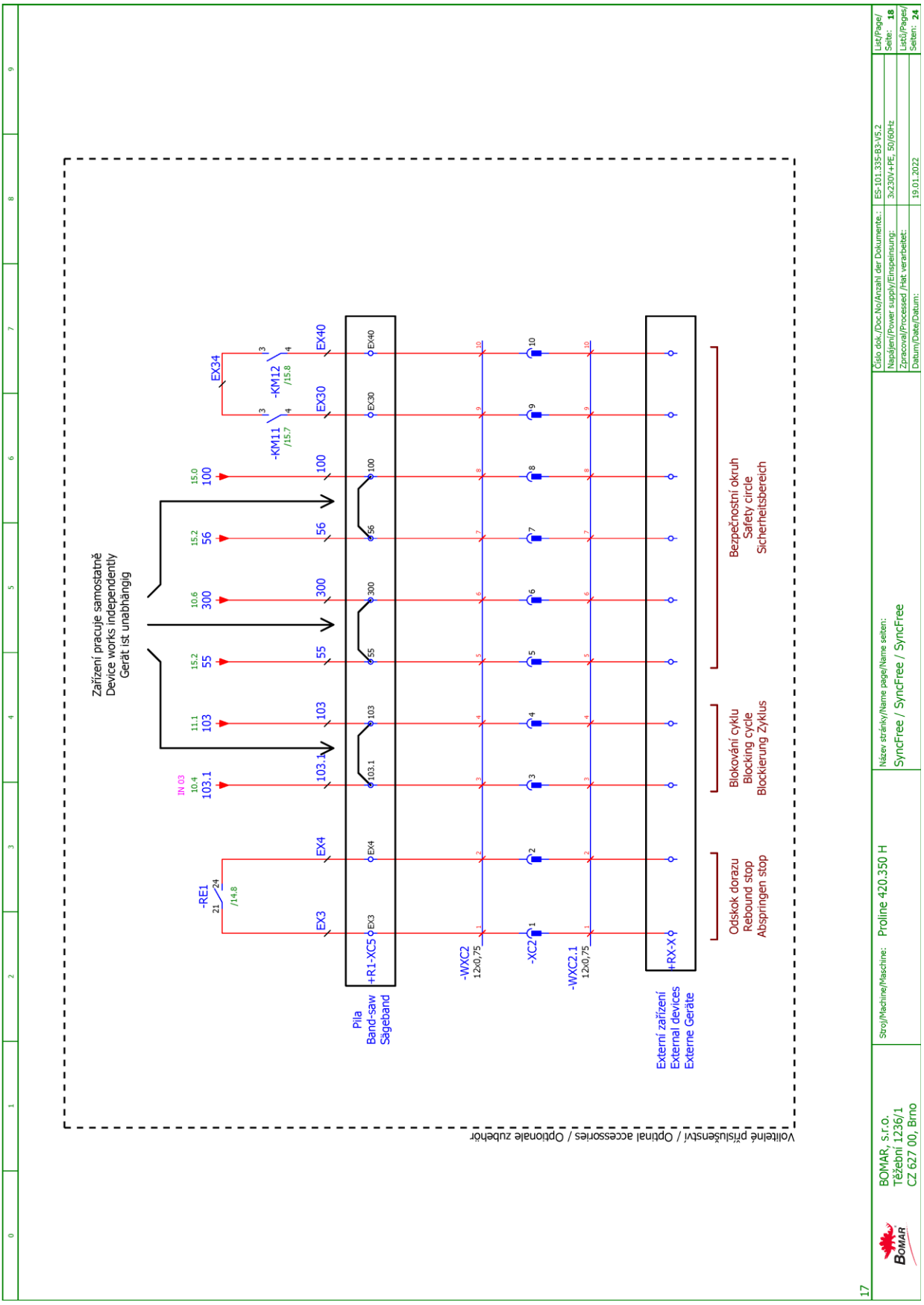
Zařízení pracuje samostatně
Device works independently
Gerät ist unabhängig
IN 03
10.4
103.1
11.1
103
15.2
55
10.6
300
15.2
56
15.0
100
-RE1
21
24
/14.8
EX3
EX4
103.1
103
55
300
56
100
-KM11
/15.7
-KM12
/15.8
EX30
EX40
EX34
Pila
Band-saw
Sägeband
+R1-XC5
-WXC2
12x0,75
-XC2
-WXC2.1
12x0,75
Externí zařízení
External devices
Externe Geräte
+RX-X
Odskok dorazu
Rebound stop
Abspringen stop
Blokování cyklu
Blocking cycle
Blockierung Zyklus
Bezpečnostní okruh
Safety circle
Sicherheitsbereich
Volitelné příslušenství / Optional accessories / Optionale zubehör
BOMAR, s.r.o.
Těžební 1236/1
CZ 627 00, Brno
Stroj/Machine/Maschine: Proline 420.350 H
Název stránky/Name page/Name seiten:
SyncFree / SyncFree / SyncFree
Číslo dok./Doc.No/Anzahl der Dokumente: ES-101.335-B3-V5.2
Napájení/Power supply/Einspeinsung: 3x230V+PE, 50/60Hz
Zpracoval/Processed /Hat verarbeitet:
Datum/Date/Datum: 19.01.2022
List/Page/Seite: 18
Listů/Pages/Seiten: 24
17

6.2. Elektrické schéma / Elektroschema / Wiring diagrams – Proline 420.350 Hsx

6.2.1. 3×400 V + PE, 50 Hz

Obsah / Table of contents / Inhalt

Strana Page Seite	Název strany Page name Seitenname	Datum Date Datum
1	Úvodní strana / Start page / Startseite	30.3.2016
2	Obsah / Table of contents / Inhaltsverzeichnis	4.10.2016
3	Kusovník artiklů / Parts list / Artikelstückliste	14.7.2016
3.a	Kusovník artiklů / Parts list / Artikelstückliste	4.10.2016
3.b	Kusovník artiklů / Parts list / Artikelstückliste	4.10.2016
3.c	Kusovník artiklů / Parts list / Artikelstückliste	4.10.2016
3.d	Kusovník artiklů / Parts list / Artikelstückliste	4.10.2016
4	Ovládací panel OP1 / Control panel OP1 / Bedienpult OP1	23.3.2016
5	Rozmístění hydraulických ventilů / Placement of Hydraulic valves / Platzierung die Hydroventile	23.3.2016
6	Rozmístění prvků v rozvaděči R1 / Placement of elements in enclosure R1 / Platzierung der Elemente im Schaltschrank R1	4.10.2016
7	Silová část M1 / Power part M1 / Feld partie M1	4.10.2016
8	Silová část M2,M3 / Power part M2,M3 / Feld partie M2,M3	4.10.2016
9	Silová část M4 M5 / Power part M4, M5 / Feld partie M4, M5	4.10.2016
10	Řidicí systém / Control system / Steuersystem	13.4.2016
12	Tlačítka ovládací panel OP1 / Button control panel OP1 / Taste Bedienpult OP1	23.3.2016
13	Vstupy / Inputs / Eingänge	4.10.2016
14	Hydraulické ventily / Hydraulic valves / Hydroventile	23.3.2016
15	Stykače motorů / Motor contactors / Motor-Schutzschalter	4.10.2016
16	Bezpečnostní okruh / Safety circle / Sicherheitsbereich	4.10.2016
18	Snímač výšky ramene / Sawframe position sensor / Rahmenposition sensor	23.3.2016
19	Příslušenství / Accessories / Zubehör	23.3.2016
20	SyncFree / SyncFree / SyncFree	13.7.2016

Kusovník artiklů / Parts list / Stückliste

Označení přístroje Device identification Geräteidentifikation	Typ přístroje Device description Gerätebeschreibung	Objednací číslo Type number Typennummer	Výrobce Manufacturer Hersteller	Skladové číslo Part number Lagernummer	Množství Quantity Menge	Umístění Location Stelle
-BM1	Bezpečnostní relé 24VDC, 3NO Safety relay 24VDC, 3NO Sicherheitsrelais 24VDC, 3NO	BT50	ABB	91.051.063	1	/16.5
-FA2	Pomocné kontakty - 1xNO+1xNC Auxiliary contacts - 1xNO+1xNC Hilfskontakte - 1xNO+1xNC	HKF1-11	ABB	91.046.002	1	/8.2
-FA3	Pomocné kontakty - 1xNO+1xNC Auxiliary contacts - 1xNO+1xNC Hilfskontakte - 1xNO+1xNC	HKF1-11	ABB	91.046.002	1	/8.6
-HL1	Signálka LED červená na adaptér Red LED light for adapter Red LED-Licht für Adapter	M22-LED-R	EATON	91.061.027	1	/15.1
-KM2A	Stykač - 4kW/400V, 3P Contactor - 4kW/400V, 3P Schütz - 4 kW / 400V, 3P	AF09-30-01-11	ABB	91.040.047	1	/15.4
-KM2A	Mechanické blokování Mechanical interlock unit Mechanische Interlockeinheit	VM4	ABB	91.041.045	1	/15.4
-KM2B	Stykač - 4kW/400V, 3P Contactor - 4kW/400V, 3P Schütz - 4 kW / 400V, 3P	AF09-30-01-11	ABB	91.040.047	1	/15.6
-KM2B	Pomocný kontakt - 1xNO Auxiliary contact - 1xNO Hilfskontakt - 1xNO	CA4-10	ABB	91.041.044	2	/15.6
-SA1	Hlavice s otočným přepínačem - 4 polohy Head with rotary switch - 4 positions Kopf mit Drehschalter - 4 Positionen	M22 - WRK4	EATON	91.060.087	1	/12.7
-FU1	Pojistka trubičková - 4A/250V, pomalá, 5x20 Tube fuse - 4A/250V, slow, 5x20 Rohrsicherung - 4A / 250V, langsam, 5x20	T4A/250V	ESKA	91.230.015	1	/7.8
-RP1	Potenciometr 4k7 Potenciometer 4k7 Potentiometer 4k7	TP195 4k7/N20A	Elektronické součástky CZ, a.s	91.283.015	1	/9.5
-FA1	Tepelné relé - 0.41A Thermal relay - 0.41A Thermische Relais - 0.41A	T16-0,41	ABB	91.050.030	1	/7.4

The manufacturer reserves right to use an equivalent replacement device.

2

Kusovník artiklů / Parts list / Stückliste

Označení přístroje Device identification Geräteidentifikation	Typ přístroje Device description Gerätebeschreibung	Objednací číslo Type number Typennummer	Výrobce Manufacturer Hersteller	Skladové číslo Part number Lagernummer	Množství Quantity Menge	Umístění Location Stelle
-RP1	Hlavice potenciometru - 24mm Head of potentiometer 24mm Leiter Potentiometer 24mm	S8877 BLK	GES-ELECTRONICS, a.s.	91.060.063	1	/9.5
-RCF1	Filtr RFC vývodový Efferent RFC filter Ableitenden RFC Filter	FBOPR1624	Ing. Miroslav Vlček	91.041.015	1	/7.3
-RCF2A	Filtr RFC vývodový Efferent RFC filter Ableitenden RFC Filter	FBOPR1624	Ing. Miroslav Vlček	91.041.015	1	/8.1
-RCF6B	Filtr RFC vývodový Efferent RFC filter Ableitenden RFC Filter	FBOPR1624	Ing. Miroslav Vlček	91.041.015	1	/8.4
-RCF11	Filtr RFC vývodový Efferent RFC filter Ableitenden RFC Filter	FBOPR1624	Ing. Miroslav Vlček	91.041.015	1	/7.6
-RCF12	Filtr RFC vývodový Efferent RFC filter Ableitenden RFC Filter	FBOPR1624	Ing. Miroslav Vlček	91.041.015	1	/7.7
-FA2	Motorový spouštěč - 2.5A Motor starter - 2.5A Motorstarter - 2.5A	MS116-2,5	ABB	91.045.021	1	/8.2
-FA3	Motorový spouštěč - 1A Motor starter - 1A Motorstarter - 1A	MS116-1,00	ABB	91.045.019	1	/8.6
-KM1	Ministykač - 4kW/400V, 3P Mini contactor - 4kW/400V, 3P Mini-Schütz - 4kW / 400V, 3P	B6S-30-01-1.7-71	ABB	91.040.049	1	/15.2
-KM2A	Pomocný kontakt - 1xNC Auxiliary contact - 1xNC Hilfskontakt - 1 xNC	CA4-01	ABB	91.041.043	1	/15.4
-KM2B	Pomocný kontakt - 1xNC Auxiliary contact - 1xNC Hilfskontakt - 1 xNC	CA4-01	ABB	91.041.043	1	/15.6
-KM11	Stykač - 5,5kW/400V, 3P Contactor - 5,5kW/400V, 3P Schütz - 5,5kW / 400V, 3P	AF12-30-01-11	ABB	91.040.051	1	/16.7

The manufacturer reserves right to use an equivalent replacement device.

Kusovník artiklů / Parts list / Stückliste

Označení přístroje Device identification Geräteidentifikation	Typ přístroje Device description Gerätebeschreibung	Objednací číslo Type number Typennummer	Výrobce Manufacturer Hersteller	Skladové číslo Part number Lagernummer	Množství Quantity Menge	Umístění Location Stelle
-KM12	Stykač - 5,5kW/400V, 3P Contactor - 5,5kW/400V, 3P Schütz - 5,5kW / 400V, 3P	AF12-30-01-11	ABB	91.040.051	1	/16.8
-PA1	Pojistkový odpojovač E-90 - 2P Fuse disconnector E-90 - 2P Sicherungstrenner E90 - 2P	E 92/32	ABB	91.241.013	1	/7.5
-QS1	3 pólový odpínač, 25A Disconnector - 3P, 25A Trennschalter - 3P, 25A	OT25FT3	ABB	91.170.016	1	/7.0
-RE1	Ministykač - 4kW/400V, 3P Mini contactor - 4kW/400V, 3P Mini-Schütz - 4kW / 400V, 3P	B6S-30-01-1.7-71	ABB	91.040.049	1	/15.8
-RP1	Svorka rychloupínací Fastconnect clamp Fast Connect Klemm	WAGO 224-112	WAGO	91.250.009	3	/9.5
-SA1	Upevňovací adaptér + 1NO Attaching adapter + 1NO Montageadapter + 1NO	M22-AK10	EATON	91.061.021	1	/12.7
-SA1	Kontaktní blok - 1NO Contact block - 1NO Kontaktblock - 1NO	M22-K10	EATON	91.061.022	2	/12.7
-SB1	Hlavice dvoutlačítka bílá/černá start/stop Double button head white/black start/stop Doppelrundkopf weiß/schwarz Start/Stopp	M22-DDL-WS-GB1/GB0	EATON	91.060.034	1	/12.1
-SB1	Upevňovací adaptér + 1NO Attaching adapter + 1NO Montageadapter + 1NO	M22-AK10	EATON	91.061.021	1	/12.1
-SB2	Kontaktní blok - 1NO Contact block - 1NO Kontaktblock - 1NO	M22-K10	EATON	91.061.022	1	/12.2
-SB3	Upevňovací adaptér + 1NO Attaching adapter + 1NO Montageadapter + 1NO	M22-AK10	EATON	91.061.021	1	/12.2
-SB3	Hlavice dvoutlačítka bílá/černá, zavřít/otevřít Double button head white/black, arrow close/open Doppelrundkopf weiß / schwarz, Pfeil Schließen / Öffnen	M22-DDL-WS-*	EATON	91.060.055	1	/12.2

The manufacturer reserves right to use an equivalent replacement device.

3.a

Kusovník artiklů / Parts list / Stückliste

Označení přístroje Device identification Geräteidentifikation	Typ přístroje Device description Gerätebeschreibung	Objednací číslo Type number Typennummer	Výrobce Manufacturer Hersteller	Skladové číslo Part number Lagernummer	Množství Quantity Menge	Umístění Location Stelle
-SB4	Kontaktní blok - 1NO Contact block - 1NO Kontaktblock - 1NO	M22-K10	EATON	91.061.022	1	/12.3
-SB5	Upevňovací adaptér + 1NO Attaching adapter + 1NO Montageadapter + 1NO	M22-AK10	EATON	91.061.021	1	/12.4
-SB5	Hlavice dvoutlačítka bílá/černá šipka nahoru/dolů Double button head white/black, arrow up/down Doppelrundkopf weiß / schwarz, Pfeil nach oben / unten	M22-DDL-WS-*-*	EATON	91.060.054	1	/12.4
-SB6	Kontaktní blok - 1NO Contact block - 1NO Kontaktblock - 1NO	M22-K10	EATON	91.061.022	1	/12.5
-SB7	Upevňovací adaptér + 1NO Attaching adapter + 1NO Montageadapter + 1NO	M22-AK10	EATON	91.061.021	1	/16.6
-SB7	Hlavice prosvětleného tlačítka žlutá Yellow trasparent switch Leiter beleuchtet gelbe Taste	M22-DL-Y	EATON	91.060.053	1	/16.6
-SB501	Total stop - hlavice + 3xNC Emergency-stop mushroom push - button + 3xNC Not-Aus-Pilz - Taster + 3 xNC	YW1B-V4E02R	IDEC	91.060.084	1	/16.4
-SB501	Kontakt - 1x NO Contact - 1x NO Kontakt - 1x NO	YW-E10	IDEC	91.061.044	1	/16.4
-TR1	Toroidní transformátor - 400V/230V/20V 4,5A 90VA Toroidal transformer - 400V / 230V / 20V 4,5A 90VA Ringkerntransformator - 400V / 230V / 20V 4,5A 90VA	400V/230V/20V 4,5A 90VA	KARBAN s.r.o.	91.080.023	1	/7.6
-SQ21	Bezpečnostní koncový spínač - 2xNC Safety Limit Switch - 2x NC Sicherheitsendschalter - 2x NC	QKS8	KEDU	91.173.012	1	/16.4
-PA1	Pojistka válcová - 2A, 10x38, pomalá Tube fuse - 2A, 10x38, slow Rohrsicherung - 2A, 10x38, langsam	PV10 2A gG	OEZ	91.230.034	2	/7.5
-PA2	Pojistkový odpínač pro válcové vložky - 3P Switch fuse for the cylinder inserts - 3P Schalter Sicherung für den Zylindereinsätze - 3P	E 93/32	ABB	91.241.014	1	/9.1

The manufacturer reserves right to use an equivalent replacement device.

3.b

Kusovník artiklů / Parts list / Stückliste

Označení přístroje Device identification Geräteidentifikation	Typ přístroje Device description Gerätebeschreibung	Objednací číslo Type number Typennummer	Výrobce Manufacturer Hersteller	Skladové číslo Part number Lagernummer	Množství Quantity Menge	Umístění Location Stelle
-PA2	Pojistka válcová - 16A, 10x38, rychlá Tube fuse - 16A, 10x38, fast Rohrsicherung - 16A, 10x38, schnell	PV10 16A gG	OEZ	91.230.020	1	/9.1
-SQ4	Koncový spínač - 1NC+1NO Limit switch - 1NC+1NO Endschalter - 1NC+1NO	D4N-4A31	OMRON	91.173.007	1	/13.7
-SQ1	Koncový spínač - 1NO + 1NC, kladka, pomalá akce Limit switch - 1NO + 1NC, pulley, slow action Endschalter - 1NO + 1NC, rolle, langsame Einwirkung	FR 605-M2	PIZZATO	91.173.009	1	/13.3
-SQ2	Koncový spínač - 1NO + 1NC, kladka, pomalá akce Limit switch - 1NO + 1NC, pulley, slow action Endschalter - 1NO + 1NC, rolle, langsame Einwirkung	FR 615-M2	PIZZATO	91.173.044	1	/13.4
-SQ3	Koncový spínač - 1NO + 1NC, dlouhá nastavitelná kladka, M2, snap action Limit switch - 1NO + 1NC, long adjustable pulley, M2, snap action Endschalter - 1NO + 1NC, lange verstellbare rolle, M2, schnapp	FR 655-M2	PIZZATO	91.173.045	1	/13.6
-FM1	Frekvenční měnič - 5.5kW, 3x400VAC Frequency converter - 5.5kW, 3x400VAC Frequenzumrichter - 5,5kW, 3x400VAC	VFD055E43A	DELTA ELECTRONICS, INC.	91.012.129	1	/9.1
-QS1	Rukojeť odpínače 48x48mm - černá Handle switch 48x48mm - black Griffschalter 48x48mm - Schwarz	OHBS3PH	ABB	91.180.018	1	/7.0
-CU1	Řídící obvod Control unit Steuereinheit	SMA_4.01W	Bomar	265.918	1	/10.0
-RCF0	Vstupní odrušovací filtr 16A Input noise filter 16A Eingangsrauschfilter 16A	16EB15/50	WIDECOM TECHNOLOGY s.r.o.	91.041.062	1	/7.1
-FU1	Svorka pojistková Fuse terminal Sicherungsklemme	WK4/THSi5U	WIELAND	91.251.102	1	/7.8
-M5	Ventilátor 24VDC, 154CFM Fan 24VDC, 154CFM Fan 24VDC, 154CFM	RDH1238 B2	Xinruilian Electronic Co.	91.015.126	1	/9.8

The manufacturer reserves right to use an equivalent replacement device.

3.c

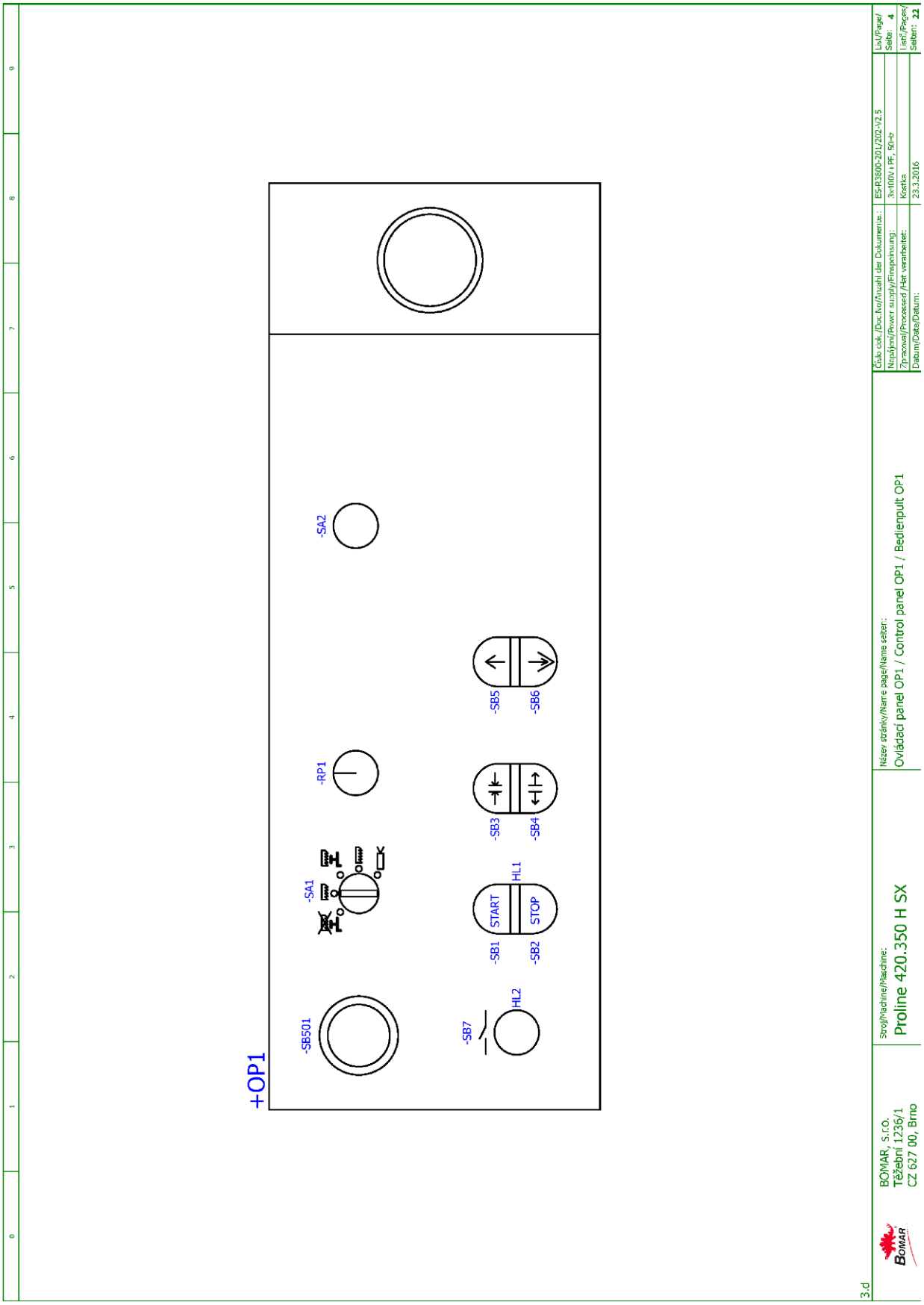
+OP1
-SB501
-SA1
-RP1
-SA2
-SB7
HL2
-SB1
START
-SB2
STOP
HL1
-SB3
-SB4
-SB5
-SB6
3.d
BOMAR, s.r.o.
Těžební 1236/1
CZ 627 00, Brno
Stroj/Machine/Maschine:
Proline 420.350 H SX
Název stránky/Name page/Name seiten:
Ovládací panel OP1 / Control panel OP1 / Bedienpult OP1
Číslo dok./Doc.No/Anzahl der Dokumente:
ES-R3600-201/202-V2.5
Napájení/Power supply/Einspeisung:
3x400V + PE, 50Hz
Zpracoval/Processed /Het verarbeitet:
Kostka
Datum/Date/Datum:
23.3.2016
List/Page/
Seite: 4
List/Pages/
Seiten: 22

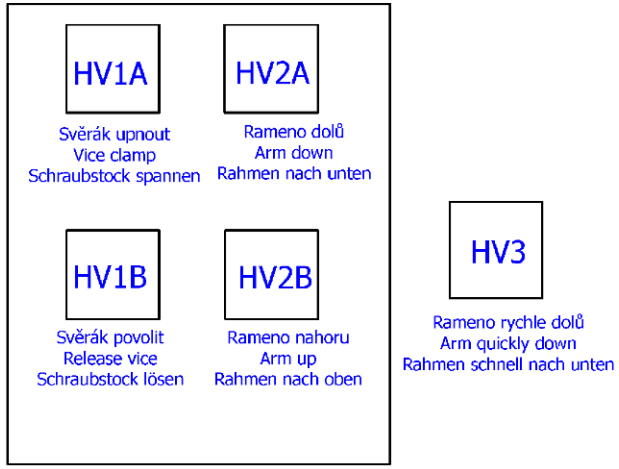

4

BOMAR, s.r.o. Těžební 1236/1 CZ 627 00, Brno	Stroj/Machine/Maschine: Proline 420.350 H SX	Název stránky/Name page/Name seiten: Rozmístění hydraulických ventilů / Placement of Hydraulic valves / Platzierung die Hydroventile Placement of elements in enclosure R1	Číslo dok./Doc.No/Anzahl der Dokumente.: ES-R3800-201/202-V2.5 Napájení/Power supply/Einspeisung: 3x400V + PE, 50Hz Zpracoval/Processed /Hat verarbeitet: Kostka Datum/Date/Datum: 23.3.2016	List/Page/Seite: 5 Listů/Pages/Seiten: 22

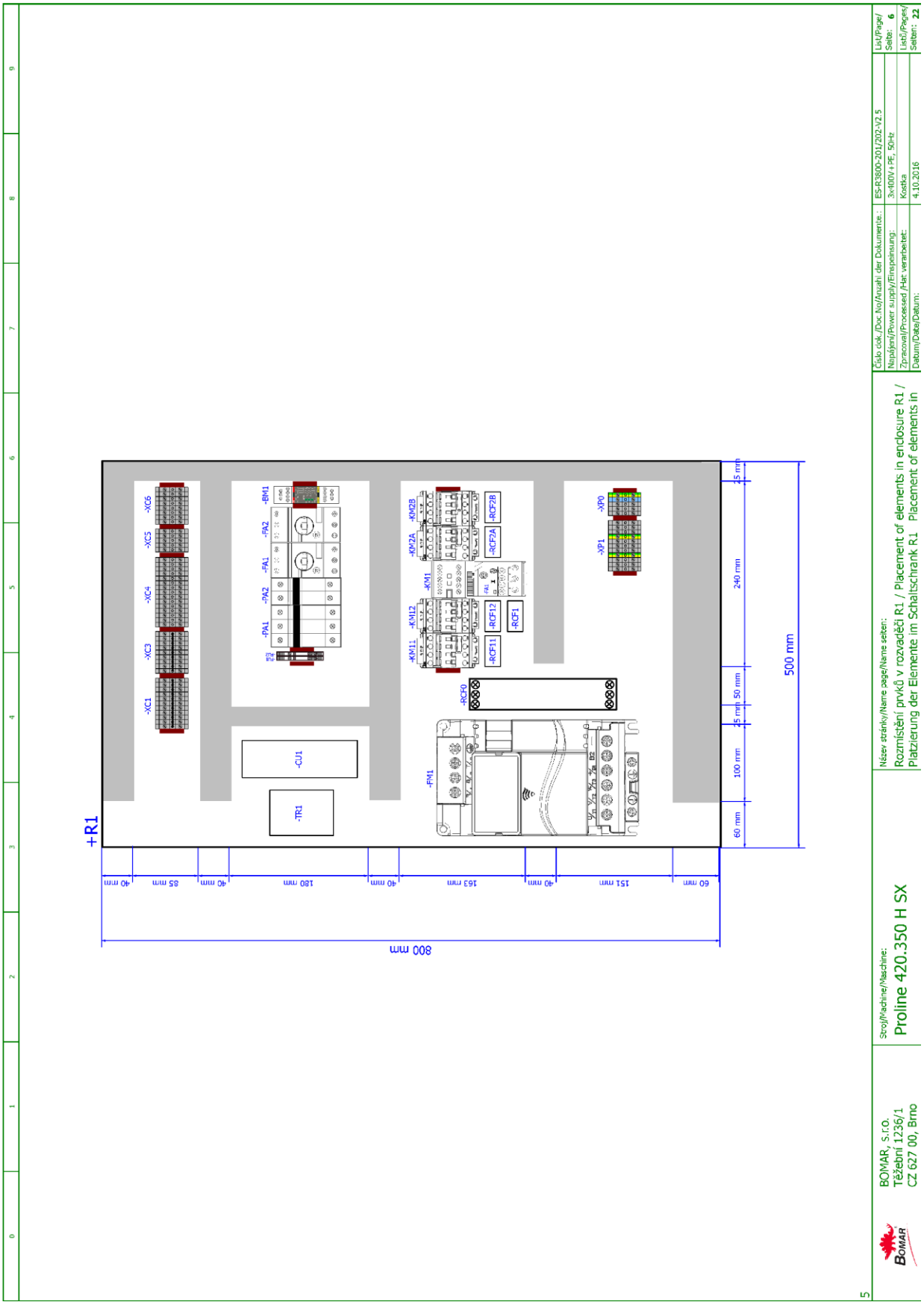

Název stránky/Name page/Name seiten:
Rozmístění prvků v rozvaděči R1 / Placement of elements in enclosure R1 / Platzierung der Elemente im Schaltschrank R1 Placement of elements in

Číslo dok./Doc.No/Anzahl der Dokumente.: ES-R3800-201/202-V2.5
Napájení/Power supply/Einspeisung: 3x400V+PE, 50Hz
Zpracoval/Processed /Hat verarbeitet: Kostka
Datum/Date/Datum: 4.10.2016

List/Page/Seite: 6
Listů/Pages/Seiten: 22

BOMAR, s.r.o.
Těžební 1236/1
CZ 627 00, Brno

Stroj/Machine/Maschine:
Proline 420.350 H SX

5

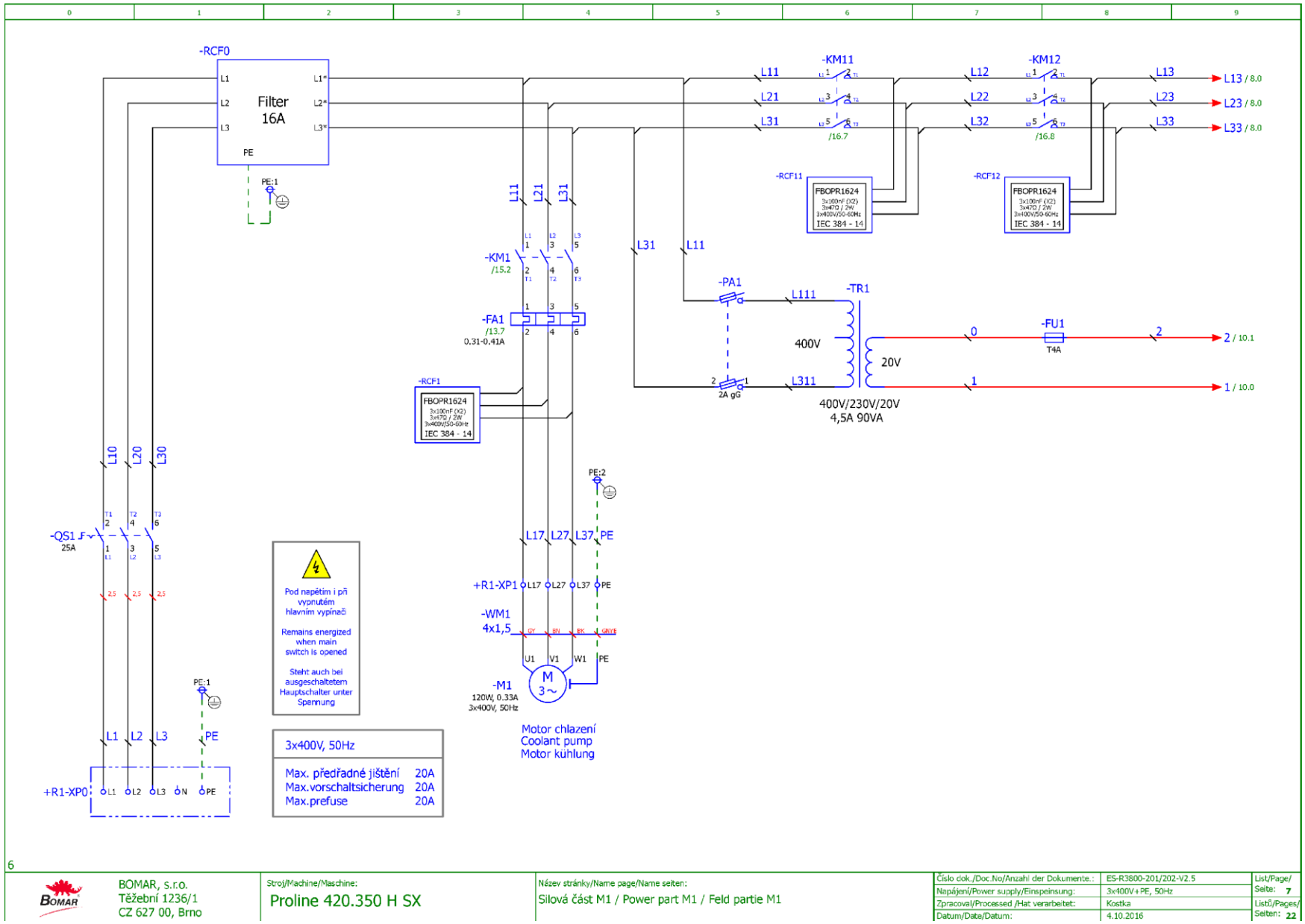

BOMAR, s.r.o. Těžební 1236/1 CZ 627 00, Brno	Stroj/Machine/Maschine: Proline 420.350 H SX	Název stránky/Name page/Name seiten: Silová část M1 / Power part M1 / Feld partie M1	Číslo dok./Doc.No/Anzahl der Dokumente.: ES-R3800-201/202-V2.5	List/Page/Seite: 7
			Napájení/Power supply/Einspeinsung: 3x400V+PE, 50Hz	Listů/Pages/Seiten: 22
			Zpracoval/Processed /Hat verarbeitet: Kostka	
			Datum/Date/Datum: 4.10.2016	

Schémata
Schemas
Schematics

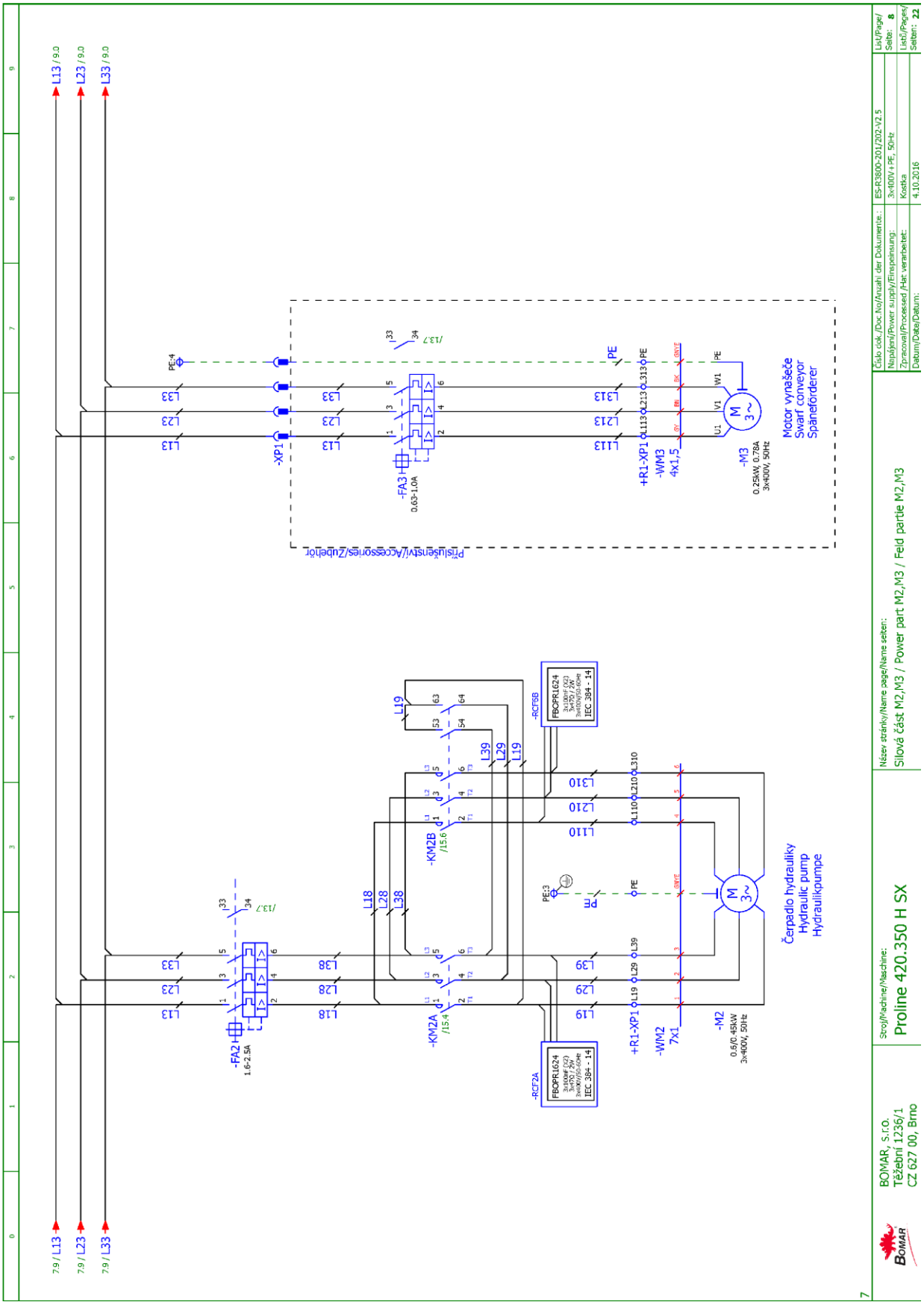
L13 / 9.0
L23 / 9.0
L33 / 9.0
7.9 / L13
7.9 / L23
7.9 / L33
PE:4
-XP1
-FA3
0.63-1.0A
/13.7
+R1-XP1
-WM3
4x1,5
-M3
0.25kW, 0.78A
3x400V, 50Hz
Motor vynašeče
Swarf conveyor
Späneförderer
Příslušenství/Accessories/Zubehör
-FA2
1.6-2.5A
-KM2A
/15.4
-KM2B
/15.6
-RCF2A
-RCF9B
FBOPR1624
IEC 384 - 14
PE:3
+R1-XP1
-WM2
7x1
-M2
0.5/0.45kW
3x400V, 50Hz
Čerpadlo hydrauliky
Hydraulic pump
Hydraulikpumpe
Číslo dok./Doc.No/Anzahl der Dokumente:
ES-R3800-201/202-V2.5
Napájení/Power supply/Einspeisung:
3x400V+PE, 50Hz
Zpracoval/Processed /Hat verarbeitet:
Kostka
Datum/Date/Datum:
4.10.2016
List/Page/
Seite: 8
Listů/Pages/
Seiten: 22
Název stránky/Name page/Name seiten:
Silová část M2,M3 / Power part M2,M3 / Feld partie M2,M3
Stroj/Machine/Maschine:
Proline 420.350 H SX
BOMAR, s.r.o.
Těžební 1236/1
CZ 627 00, Brno

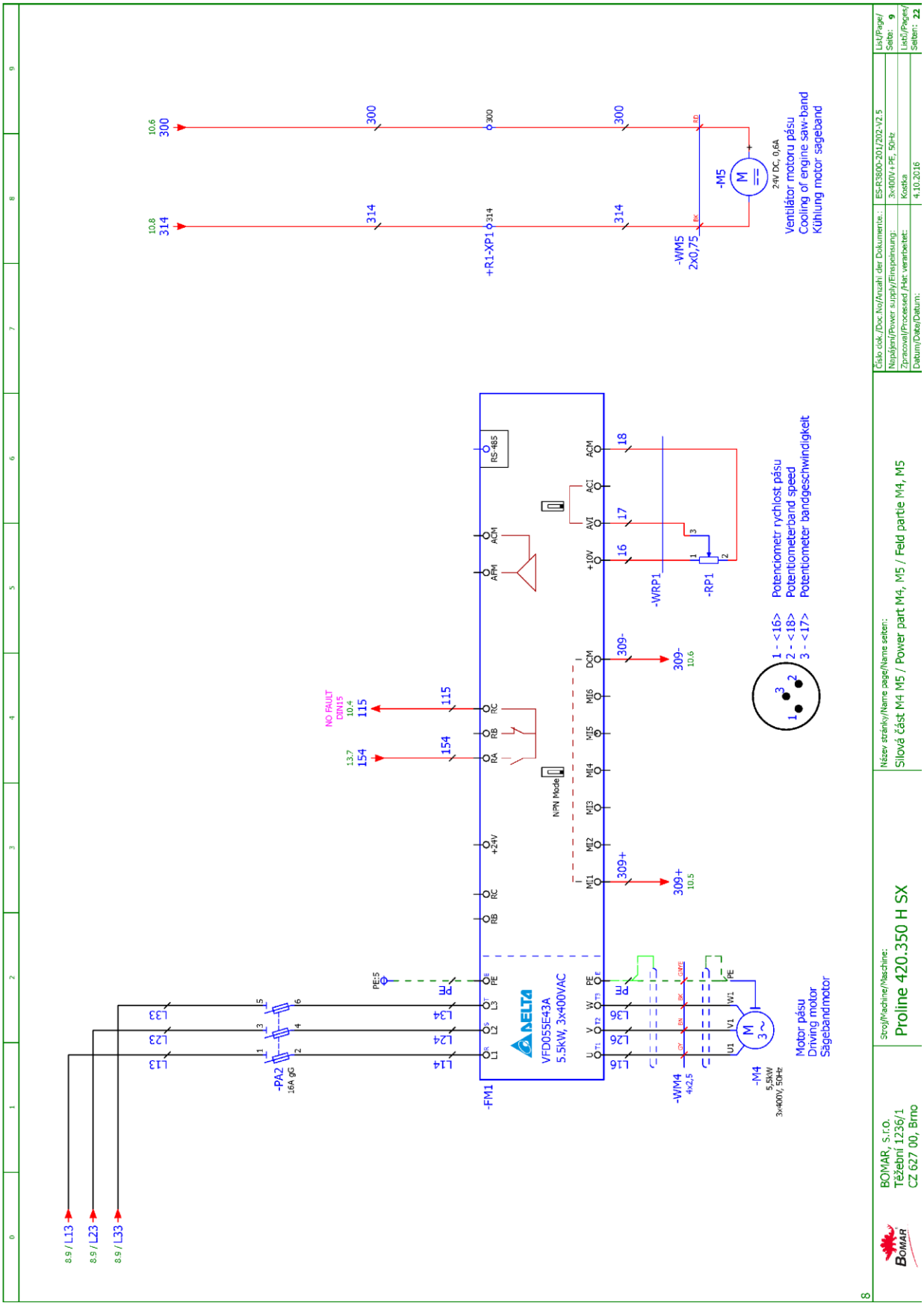

Schémata
Schemas
Schematics

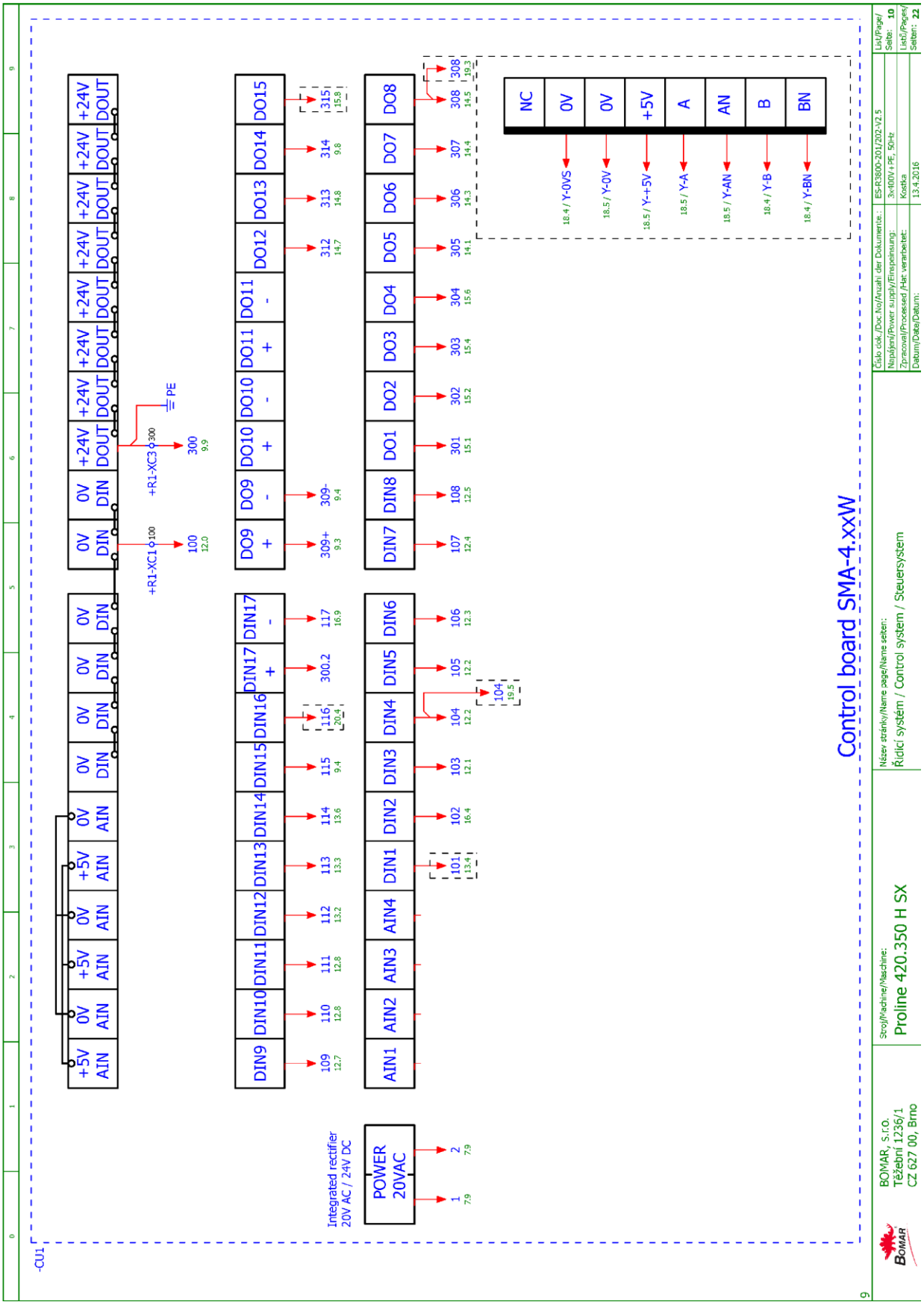
Control board SMA-4.xxW
-CU1
Integrated rectifier
20V AC / 24V DC
POWER
20VAC
AIN1 AIN2 AIN3 AIN4 DIN1 DIN2 DIN3 DIN4 DIN5 DIN6 DIN7 DIN8 DO1 DO2 DO3 DO4 DO5 DO6 DO7 DO8
DIN9 DIN10 DIN11 DIN12 DIN13 DIN14 DIN15 DIN16 DIN17 DO9 DO10 DO11 DO12 DO13 DO14 DO15
+5V AIN 0V AIN +5V AIN 0V AIN +5V AIN 0V AIN 0V DIN 0V DIN 0V DIN 0V DIN 0V DIN 0V DIN 0V DIN 0V DIN +24V DOUT +24V DOUT +24V DOUT +24V DOUT +24V DOUT +24V DOUT +24V DOUT +24V DOUT
+R1-XC1
+R1-XC3
PE
NC 0V 0V +5V A AN B BN
18.4 / Y-0VS
18.5 / Y-0V
18.5 / Y-+5V
18.5 / Y-A
18.5 / Y-AN
18.4 / Y-B
18.4 / Y-BN
BOMAR, s.r.o.
Těžební 1236/1
CZ 627 00, Brno
Stroj/Machine/Maschine:
Proline 420.350 H SX
Název stránky/Name page/Name seiten:
Řídicí systém / Control system / Steuersystem
Číslo dok./Doc.No/Anzahl der Dokumente:
ES-R3800-201/202-V2.5
Napájení/Power supply/Einspeisung:
3x400V+PE, 50Hz
Zpracoval/Processed /Hat verarbeitet:
Kostka
Datum/Date/Datum:
13.4.2016
List/Page/Seite: 10
Listů/Pages/Seiten: 22

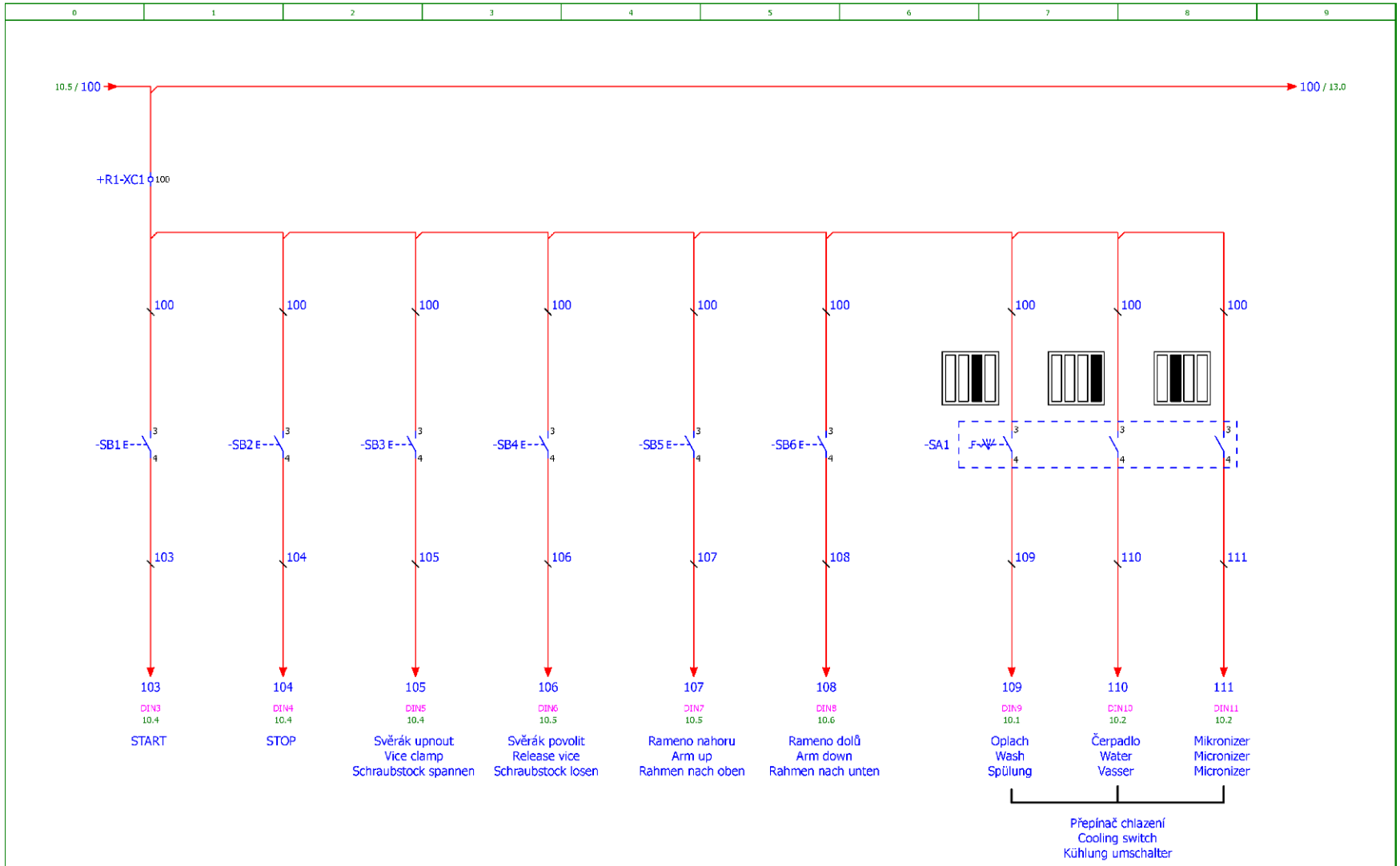

10

BOMAR, s.r.o. Těžební 1236/1 CZ 627 00, Brno	Stroj/Machine/Maschine: Proline 420.350 H SX	Název stránky/Name page/Name seiten: Tlačítka ovládací panel OP1 / Button control panel OP1 / Taste Bedienpult OP1	Číslo dok./Doc.No/Anzahl der Dokumente.: ES-R3800-201/202-V2.5 Napájení/Power supply/Einspeisung: 3x400V + PE, 50Hz Zpracoval/Processed /Hat verarbeitet: Kostka Datum/Date/Datum: 23.3.2016	List/Page/Seite: 12 Listů/Pages/Seiten: 22

Schémata
Schemas
Schematics

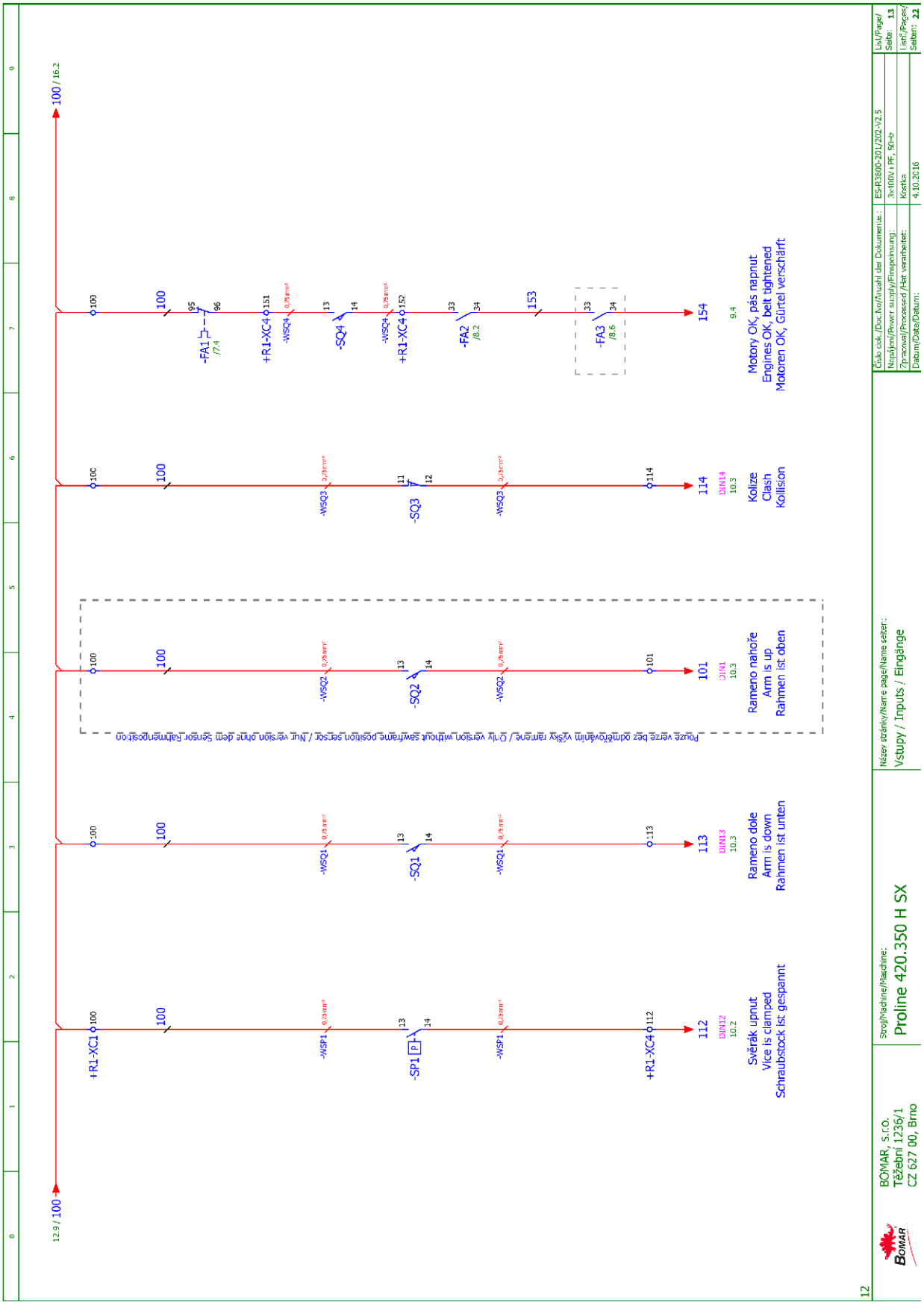
Svěrák upnut
Vice is clamped
Schraubstock ist gespannt
Rameno dole
Arm is down
Rahmen ist unten
Rameno nahoře
Arm is up
Rahmen ist oben
Kolize
Clash
Kollision
Motory OK, pás napnut
Engines OK, belt tightened
Motoren OK, Gürtel verschärft
BOMAR, S.r.o.
Těžební 1236/1
CZ 627 00, Brno
Stroj/Machine/Maschine:
Proline 420.350 H SX
Název stránky/Name page/Name seiten:
Vstupy / Inputs / Eingänge
ES-R3800-201/202-V2.5
3x400V + PE, 50~Hz
Kostka
4.10.2016
Číslo dok./Doc. kus/Anzahl der Dokumente:
Napájení/Power supply/Einspeisung:
Zpracoval/Processed /Hat verarbeitet:
Datum/Date/Datum:
List/Page/Seite: 13
Listů/Pages/Seiten: 22

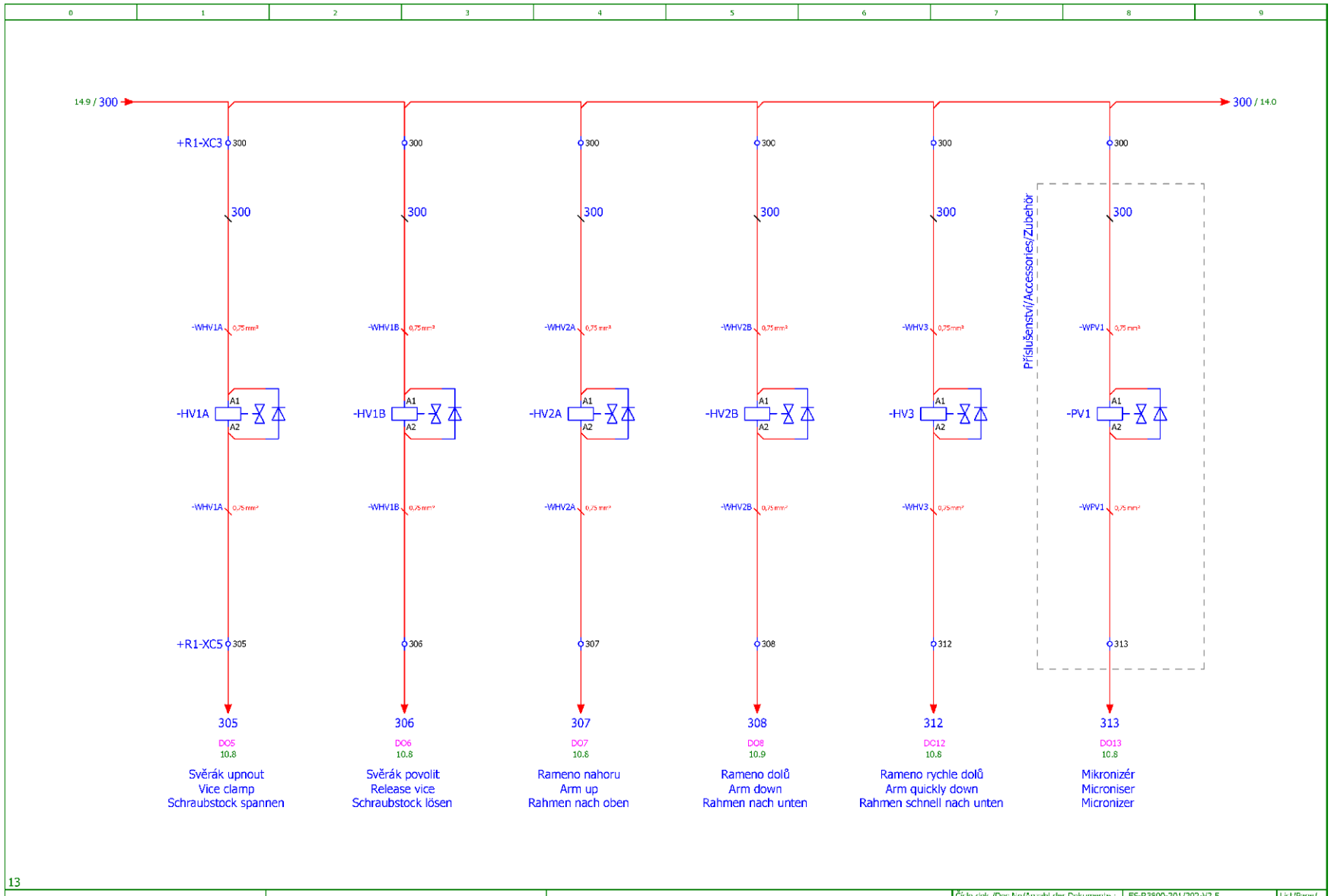

13

BOMAR, s.r.o. Těžební 1236/1 CZ 627 00, Brno	Stroj/Machine/Maschine: Proline 420.350 H SX	Název stránky/Name page/Name seiten: Hydraulické ventily / Hydraulic valves / Hydroventile	Číslo dok./Doc.No/Anzahl der Dokumente.: ES-R3800-201/202-V2.5 Napájení/Power supply/Einspeisung: 3x400V + PE, 50Hz Zpracoval/Processed /Hat verarbeitet: Kostka Datum/Date/Datum: 23.3.2016	List/Page/Seite: 14 Listů/Pages/Seiten: 22

Schémata
Schemas
Schematics

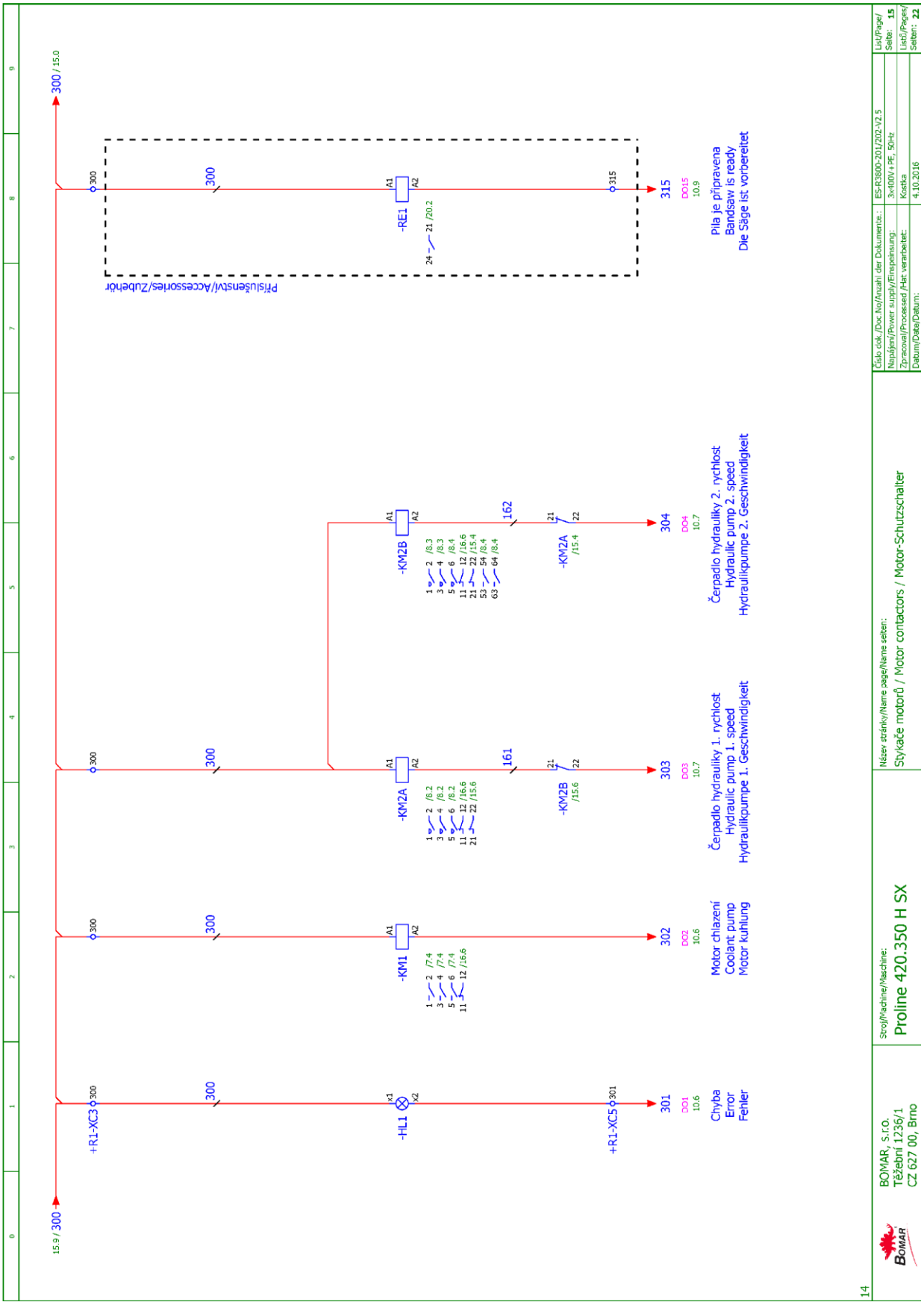
15.9 / 300
300 / 15.0
+R1-XC3
-HL1
Chyba
Error
Fehler
DO1
10.6
301
+R1-XC5
-KM1
Motor chlazení
Coolant pump
Motor kuhlung
DO2
10.6
302
-KM2A
Čerpadlo hydrauliky 1. rychlost
Hydraulic pump 1. speed
Hydraulikpumpe 1. Geschwindigkeit
DO3
10.7
303
-KM2B
Čerpadlo hydrauliky 2. rychlost
Hydraulic pump 2. speed
Hydraulikpumpe 2. Geschwindigkeit
DO4
10.7
304
-RE1
Příslušenství/Accessories/Zubehör
Pila je připravena
Bandsaw is ready
Die Säge ist vorbereitet
DO15
10.9
315
Číslo dok./Doc.No/Anzahl der Dokumente:
ES-R3800-201/202-V2.5
Napájení/Power supply/Einspeisung:
3x400V+PE, 50Hz
Zpracoval/Processed /Hat verarbeitet:
Kostka
Datum/Date/Datum:
4.10.2016
List/Page/
Seite: 15
Listů/Pages/
Seiten: 22
Název stránky/Name page/Name seiten:
Stykače motorů / Motor contactors / Motor-Schutzschalter
Stroj/Machine/Maschine:
Proline 420.350 H SX
BOMAR, s.r.o.
Těžební 1236/1
CZ 627 00, Brno
14

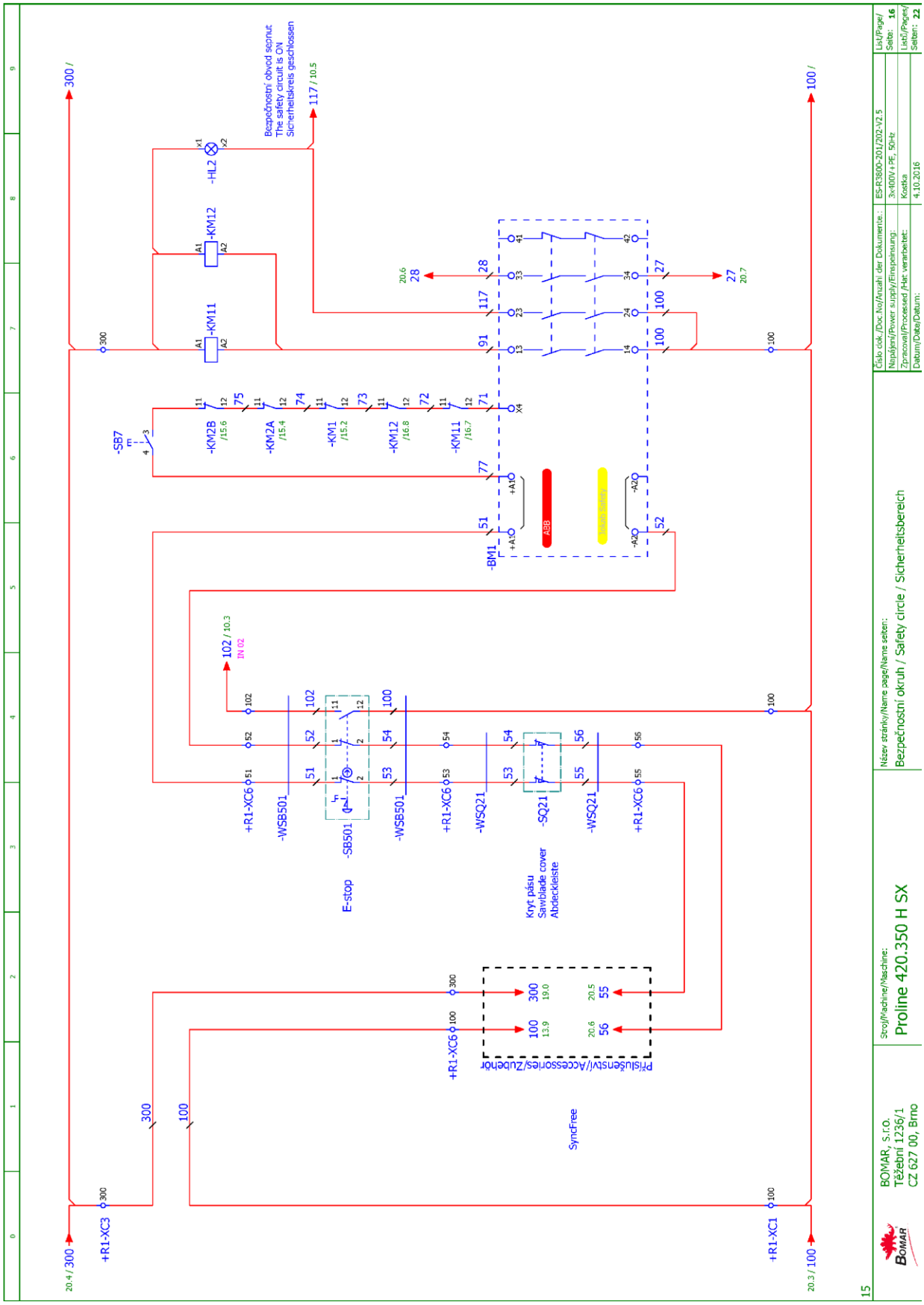

Schémata
Schemas
Schematics

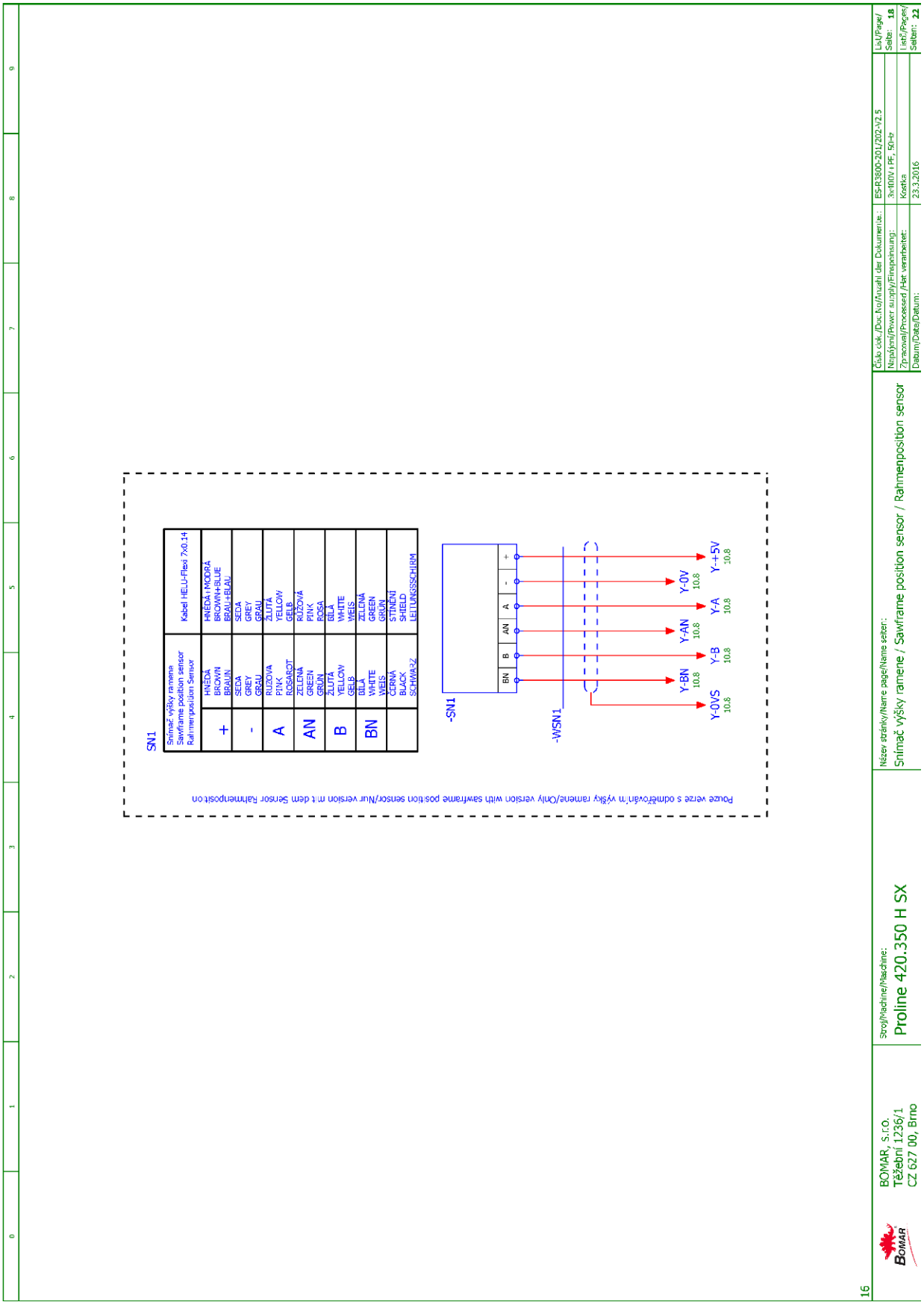

BOMAR, s.r.o. Těžební 1236/1 CZ 627 00, Brno	Stroj/Machine/Maschine: Proline 420.350 H SX	Název stránky/Name page/Name seiten: Snímač výšky ramene / Sawframe position sensor / Rahmenposition sensor	Číslo dok./Doc.No/Anzahl der Dokumente.: ES-R3600-201/202-V2.5 Napájení/Power supply/Einspeisung: 3x400V + PE, 50~Hz Zpracoval/Processed /Het verarbeitet: Kostka Datum/Date/Datum: 23.3.2016

16

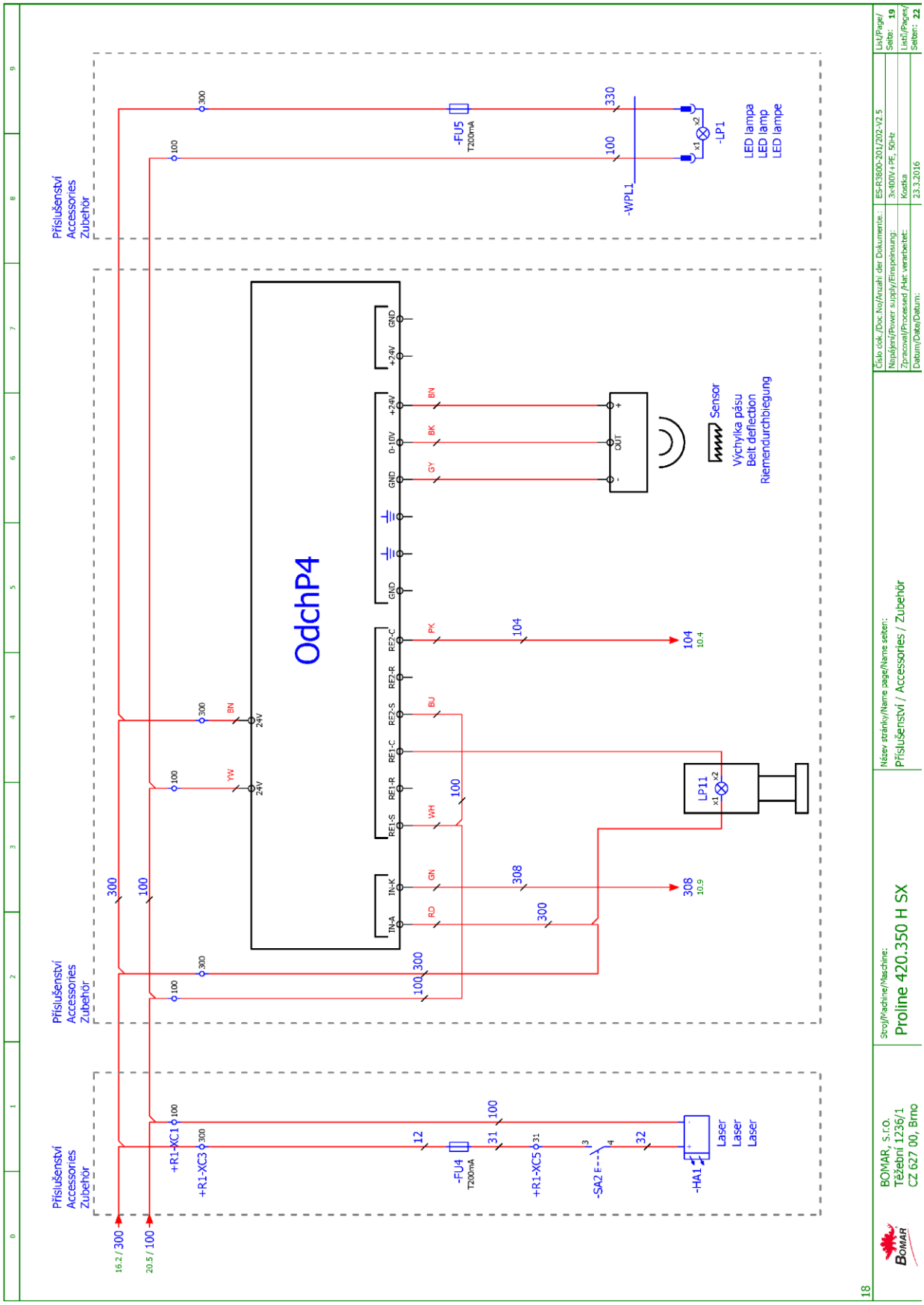

Schémata
Schemas
Schematics

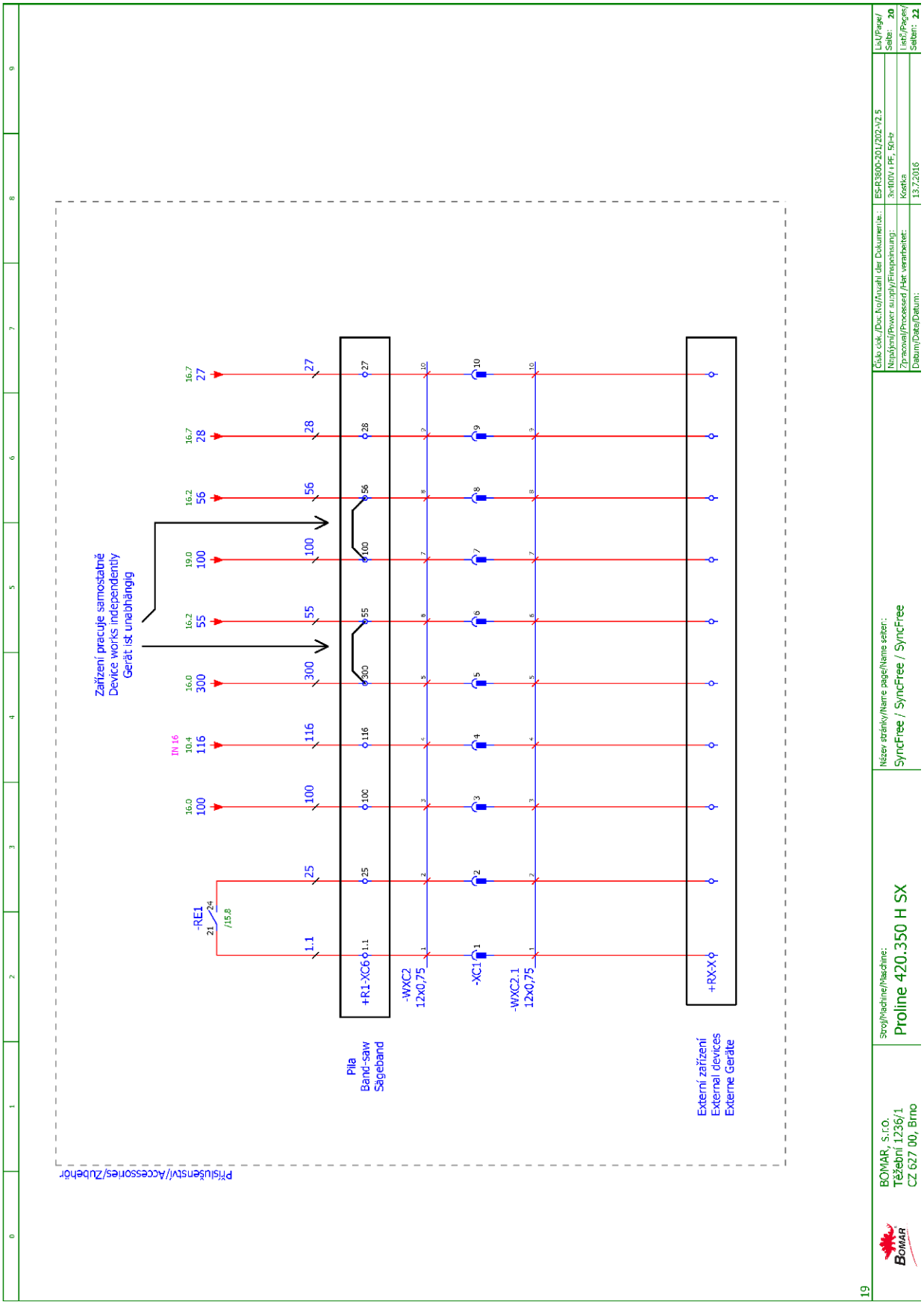
Zařízení pracuje samostatně
Device works independently
Gerät ist unabhängig
-RE1
+R1-XC6
-WXC2
12x0,75
-XC1
-WXC2.1
12x0,75
+RX-X
Pila
Band-saw
Sägeband
Externí zařízení
External devices
Externe Geräte
Příslušenství/Accessories/Zubehör
BOMAR, s.r.o.
Těžební 1236/1
CZ 627 00, Brno
Stroj/Machine/Maschine:
Proline 420.350 H SX
Název stránky/Name page/Name seiten:
SyncFree / SyncFree / SyncFree
ES-R3600-201/202-V2.5
3x400V + PE, 50~Hz
Kostka
13.7.2016
List/Page/
Seite: 20
Listů/Pages/
Seiten: 22
19

6.2.2. 3×230 V + PE, 50 Hz

Obsah / Table of contents / Inhalt

Strana Page Seite	Název strany Page name Seitenname	Datum Date Datum
1	Úvodní strana / Start page / Startseite	13.7.2016
2	Obsah / Table of contents / Inhaltsverzeichnis	4.10.2016
3	Kusovník artiklů / Parts list / Artikelstückliste	4.10.2016
3.a	Kusovník artiklů / Parts list / Artikelstückliste	4.10.2016
3.b	Kusovník artiklů / Parts list / Artikelstückliste	4.10.2016
3.c	Kusovník artiklů / Parts list / Artikelstückliste	4.10.2016
3.d	Kusovník artiklů / Parts list / Artikelstückliste	4.10.2016
3.e	Kusovník artiklů / Parts list / Artikelstückliste	4.10.2016
4	Rozmístění prvků v rozvaděči R1 / Placement of elements in enclosure R1 / Platzierung der Elemente im Schaltschrank R1	4.10.2016
5	Ovládací panel OP1 / Control panel OP1 / Bedienpult OP1	23.3.2016
6	Rozmístění hydraulických ventilů / Placement of Hydraulic valves / Platzierung die Hydroventile	23.3.2016
7	Silová část M1 / Power part M1 / Feld partie M1	4.10.2016
8	Silová část M2, M3 / Power part M2, M3 / Feld partie M2, M3	4.10.2016
9	Silová část M4, M5 / Power part M4, M5 / Feld partie M4, M5	4.10.2016
10	Řidicí systém / Control system / Steuersystem	4.10.2016
12	Tlačítka ovládací panel OP1 / Button control panel OP1 / Taste Bedienpult OP1	23.3.2016
13	Vstupy / Inputs / Eingänge	4.10.2016
14	Hydraulické ventily / Hydraulic valves / Hydroventile	23.3.2016
15	Stykače motorů / Motor contactors / Motor-Schutzschalter	4.10.2016
16	Bezpečnostní okruh / Safety circle / Sicherheitsbereich	4.10.2016
18	Snímač výšky ramene / Sawframe position sensor / Rahmenposition sensor	23.3.2016
19	Příslušenství / Accessories / Zubehör	23.3.2016
20	SyncFree / SyncFree / SyncFree	13.7.2016

Kusovník artiklů / Parts list / Stückliste

Označení přístroje Device identification Geräteidentifikation	Typ přístroje Device description Gerätebeschreibung	Objednací číslo Type number Typennummer	Výrobce Manufacturer Hersteller	Skladové číslo Part number Lagernummer	Množství Quantity Menge	Umístění Location Stelle
-BM1	Bezpečnostní relé 24VDC, 3NO Safety relay 24VDC, 3NO Sicherheitsrelais 24VDC, 3NO	BT50	ABB	91.051.063	1	/16.5
-PA2	Pojistkový odpínač pro válcové vložky - 3P Switch fuse for the cylinder inserts - 3P Schalter Sicherung für den Zylindereinsätze - 3P	E93/32	ABB	91.241.014	1	/9.1
-FA2	Pomocné kontakty - 1xNO+1xNC Auxiliary contacts - 1xNO+1xNC Hilfskontakte - 1xNO+1xNC	HKF1-11	ABB	91.046.002	1	/8.2
-FA3	Pomocné kontakty - 1xNO+1xNC Auxiliary contacts - 1xNO+1xNC Hilfskontakte - 1xNO+1xNC	HKF1-11	ABB	91.046.002	1	/8.6
-HL1	Signálka LED červená na adaptér Red LED light for adapter Red LED-Licht für Adapter	M22-LED-R	EATON	91.061.027	1	/15.1
-KM2A	Stykač - 4kW/400V, 3P Contactor - 4kW/400V, 3P Schütz - 4 kW / 400V, 3P	AF09-30-01-11	ABB	91.040.047	1	/15.4
-KM2A	Mechanické blokování Mechanical interlock unit Mechanische Interlockeinheit	VM4	ABB	91.041.045	1	/15.4
-KM2B	Stykač - 4kW/400V, 3P Contactor - 4kW/400V, 3P Schütz - 4 kW / 400V, 3P	AF09-30-01-11	ABB	91.040.047	1	/15.6
-KM2B	Pomocný kontakt - 1xNO Auxiliary contact - 1xNO Hilfskontakt - 1xNO	CA4-10	ABB	91.041.044	2	/15.6
-SA1	Hlavice s otočným přepínačem - 4 polohy Head with rotary switch - 4 positions Kopf mit Drehschalter - 4 Positionen	M22 - WRK4	EATON	91.060.087	1	/12.7
-FU1	Pojistka trubičková - 4A/250V, pomalá, 5x20 Tube fuse - 4A/250V, slow, 5x20 Rohrsicherung - 4A / 250V, langsam, 5x20	T4A/250V	ESKA	91.230.015	1	/7.8
-M5	Ventilátor 24VDC, 154CFM Fan 24VDC, 154CFM Fan 24VDC, 154CFM	RDH1238 B2	Xinruilian Electronic Co.	91.015.126	1	/9.8

The manufacturer reserves right to use an equivalent replacement device.

2

Kusovník artiklů / Parts list / Stückliste

Označení přístroje Device identification Geräteidentifikation	Typ přístroje Device description Gerätebeschreibung	Objednací číslo Type number Typennummer	Výrobce Manufacturer Hersteller	Skladové číslo Part number Lagernummer	Množství Quantity Menge	Umístění Location Stelle
-RP1	Potenciometr 4k7 Potenciometer 4k7 Potentiometer 4k7	TP195 4k7/N20A	Elektronické součástky CZ, a.s	91.283.015	1	/9.5
-FA1	Tepelné relé - 0.74A Thermal relay - 0.74A Thermische Relais - 0.74A	T16-0,74	ABB	91.050.021	1	/7.4
-RP1	Hlavice potenciometru - 24mm Head of potentiometer 24mm Leiter Potentiometer 24mm	S8877 BLK	GES-ELECTRONICS, a.s.	91.060.063	1	/9.5
-RCF1	Filtr RFC vývodový Efferent RFC filter Ableitenden RFC Filter	FBOPR1624	Ing. Miroslav Vlček	91.041.015	1	/7.3
-RCF2A	Filtr RFC vývodový Efferent RFC filter Ableitenden RFC Filter	FBOPR1624	Ing. Miroslav Vlček	91.041.015	1	/8.1
-RCF6B	Filtr RFC vývodový Efferent RFC filter Ableitenden RFC Filter	FBOPR1624	Ing. Miroslav Vlček	91.041.015	1	/8.4
-RCF11	Filtr RFC vývodový Efferent RFC filter Ableitenden RFC Filter	FBOPR1624	Ing. Miroslav Vlček	91.041.015	1	/7.6
-RCF12	Filtr RFC vývodový Efferent RFC filter Ableitenden RFC Filter	FBOPR1624	Ing. Miroslav Vlček	91.041.015	1	/7.7
-FA2	Motorový spouštěč - 2.5A Motor starter - 2.5A Motorstarter - 2.5A	MS116-2,5	ABB	91.045.021	1	/8.2
-FA3	Motorový spouštěč - 1.6A Motor starter - 1.6A Motorstarter - 1.6A	MS116-1,6	ABB	91.045.020	1	/8.6
-KM1	Ministýkač 4kW/400V Minicontactor 4kW/400V Minischutz 4kW/400V	B6S-30-01-1.7-71	ABB	91.040.049	1	/15.2
-KM2A	Pomocný kontakt - 1xNC Auxiliary contact - 1xNC Hilfskontakt - 1 xNC	CA4-01	ABB	91.041.043	1	/15.4

The manufacturer reserves right to use an equivalent replacement device.

Kusovník artiklů / Parts list / Stückliste

Označení přístroje Device identification Geräteidentifikation	Typ přístroje Device description Gerätebeschreibung	Objednací číslo Type number Typennummer	Výrobce Manufacturer Hersteller	Skladové číslo Part number Lagernummer	Množství Quantity Menge	Umístění Location Stelle
-KM2B	Pomocný kontakt - 1xNC Auxiliary contact - 1xNC Hilfskontakt - 1 xNC	CA4-01	ABB	91.041.043	1	/15.6
-KM11	Stýkač 7,5kW/400V Contactor 7,5kW/400V Schütz 7,5kW/400V	AF16-30-10-11	ABB	91.040.056	1	/16.7
-KM11	Pomocný kontakt - 1xNC Auxiliary contact - 1xNC Hilfskontakt - 1 xNC	CA4-01	ABB	91.041.043	1	/16.7
-KM12	Stýkač 5,5kW/400V Contactor 5,5kW/400V Schütz 5,5kW/400V	AF12-30-01-11	ABB	91.040.051	1	/16.8
-PA1	Pojistkový odpojovač E-90 - 2P Fuse disconnector E-90 - 2P Sicherungstrenner E90 - 2P	E 92/32	ABB	91.241.013	1	/7.5
-QS1	3 pólový odpínač, 40A Disconnector - 3P, 40A Trennschalter - 3P, 40A	OT40FT3	ABB	91.170.019	1	/7.0
-RE1	Ministýkač 4kW/400V Minicontactor 4kW/400V Minischutz 4kW/400V	B6S-30-01-1.7-71	ABB	91.040.049	1	/15.8
-RP1	Svorka rychloupínací Fastconnect clamp Fast Connect Klemm	WAGO 224-112	WAGO	91.250.009	3	/9.5
-SA1	Upevňovací adaptér + 1NO Attaching adapter + 1NO Montageadapter + 1NO	M22-AK10	EATON	91.061.021	1	/12.7
-SA1	Kontaktní blok - 1NO Contact block - 1NO Kontaktblock - 1NO	M22-K10	EATON	91.061.022	2	/12.7
-SB1	Hlavice dvoutlačítka bílá/černá start/stop Double button head white/black start/stop Doppelrundkopf weiß/schwarz Start/Stopp	M22-DDL-WS-GB1/GB0	EATON	91.060.034	1	/12.1
-SB1	Upevňovací adaptér + 1NO Attaching adapter + 1NO Montageadapter + 1NO	M22-AK10	EATON	91.061.021	1	/12.1

The manufacturer reserves right to use an equivalent replacement device.

3.a

Kusovník artiklů / Parts list / Stückliste

Označení přístroje Device identification Geräteidentifikation	Typ přístroje Device description Gerätebeschreibung	Objednací číslo Type number Typennummer	Výrobce Manufacturer Hersteller	Skladové číslo Part number Lagernummer	Množství Quantity Menge	Umístění Location Stelle
-SB2	Kontaktní blok - 1NO Contact block - 1NO Kontaktblock - 1NO	M22-K10	EATON	91.061.022	1	/12.2
-SB3	Upevňovací adaptér + 1NO Attaching adapter + 1NO Montageadapter + 1NO	M22-AK10	EATON	91.061.021	1	/12.3
-SB3	Hlavice dvoutlačítka bílá/černá, zavřít/otevřít Double button head white/black, arrow close/open Doppelrundkopf weiß / schwarz, Pfeil Schließen / Öffnen	M22-DDL-WS-*	EATON	91.060.055	1	/12.3
-SB4	Kontaktní blok - 1NO Contact block - 1NO Kontaktblock - 1NO	M22-K10	EATON	91.061.022	1	/12.4
-SB5	Upevňovací adaptér + 1NO Attaching adapter + 1NO Montageadapter + 1NO	M22-AK10	EATON	91.061.021	1	/12.5
-SB5	Hlavice dvoutlačítka bílá/černá šipka nahoru/dolů Double button head white/black, arrow up/down Doppelrundkopf weiß / schwarz, Pfeil nach oben / unten	M22-DDL-WS-*-*	EATON	91.060.054	1	/12.5
-SB6	Kontaktní blok - 1NO Contact block - 1NO Kontaktblock - 1NO	M22-K10	EATON	91.061.022	1	/12.6
-SB7	Upevňovací adaptér + 1NO Attaching adapter + 1NO Montageadapter + 1NO	M22-AK10	EATON	91.061.021	1	/16.6
-SB7	Hlavice prosvětleného tlačítka žlutá Yellow trasparent switch Leiter beleuchtet gelbe Taste	M22-DL-Y	EATON	91.060.053	1	/16.6
-SB501	Total stop - hlavice + 3xNC Emergency-stop mushroom push - button + 3xNC Not-Aus-Pilz - Taster + 3 xNC	YW1B-V4E02R	IDEC	91.060.084	1	/16.4
-SB501	Kontakt - 1x NO Contact - 1x NO Kontakt - 1x NO	YW-E10	IDEC	91.061.044	1	/16.4
-TR1	Toroidní transformátor - 400V/230V/20V 4,5A 90VA Toroidal transformer - 400V / 230V / 20V 4,5A 90VA Ringkerntransformator - 400V / 230V / 20V 4,5A 90VA	400V/230V/20V 4,5A 90VA	KARBAN s.r.o.	91.080.023	1	/7.6

The manufacturer reserves right to use an equivalent replacement device.

3.b

Kusovník artiklů / Parts list / Stückliste

Označení přístroje Device identification Geräteidentifikation	Typ přístroje Device description Gerätebeschreibung	Objednací číslo Type number Typennummer	Výrobce Manufacturer Hersteller	Skladové číslo Part number Lagernummer	Množství Quantity Menge	Umístění Location Stelle
-SQ21	Bezpečnostní koncový spínač - 2xNC Safety Limit Switch - 2x NC Sicherheitsendschalter - 2x NC	QKS8	KEDU	91.173.012	1	/16.4
-PA1	Pojistka válcová - 2A, 10x38, pomalá Tube fuse - 2A, 10x38, slow Rohrsicherung - 2A, 10x38, langsam	PV10 2A gG	OEZ	91.230.034	2	/7.5
-SQ4	Koncový spínač - 1NC+1NO Limit switch - 1NC+1NO Endschalter - 1NC+1NO	D4N-4A31	OMRON	91.173.007	1	/13.7
-SQ1	Koncový spínač - 1NO + 1NC, kladka, pomalá akce Limit switch - 1NO + 1NC, pulley, slow action Endschalter - 1NO + 1NC, rolle, langsame Einwirkung	FR 605-M2	PIZZATO	91.173.009	1	/13.3
-SQ2	Koncový spínač - 1NO + 1NC, kladka, pomalá akce Limit switch - 1NO + 1NC, pulley, slow action Endschalter - 1NO + 1NC, rolle, langsame Einwirkung	FR 615-M2	PIZZATO	91.173.044	1	/13.4
-SQ3	Koncový spínač - 1NO + 1NC, dlouhá nastavitelná kladka, M2, snap action Limit switch - 1NO + 1NC, long adjustable pulley, M2, snap action Endschalter - 1NO + 1NC, lange verstellbare rolle, M2, schnapp	FR 655-M2	PIZZATO	91.173.045	1	/13.6
-FM1	Frekvenční měnič - 5.5kW, 3x230VAC Frequency converter - 5.5kW, 3x230VAC Frequenzumrichter - 5,5kW, 3x230VAC	VFD055E23A	DELTA ELECTRONICS, INC.	91.012.135	1	/9.1
-PA2	Pojistka válcová - 32A, 10x38, gG Tube fuse - 32A, 10x38, fast Rohrsicherung - 32A, 10x38, schnell	PV10 32A gG	OEZ	91.230.019	3	/9.1
-QS1	Rukojeť odpínače 48x48mm - černá Handle switch 48x48mm - black Griffschalter 48x48mm - Schwarz	OHBS3PH	ABB	91.180.018	1	/7.0
-CU1	Řídící obvod Control unit Steuereinheit	SMA_4.01W	Bomar	265.918	1	/10.0
-RCF0	Odrušovací filtr 32A Noise filter 32A Rauschfilter 32A	32EB15/50/C2	WIDECOM TECHNOLOGY s.r.o.	91.041.066	1	/9.1
-FU1	Svorka pojistková Fuse terminal Sicherungsklemme	WK4/THSi5U	WIELAND	91.251.102	1	/7.8

The manufacturer reserves right to use an equivalent replacement device.

3.c

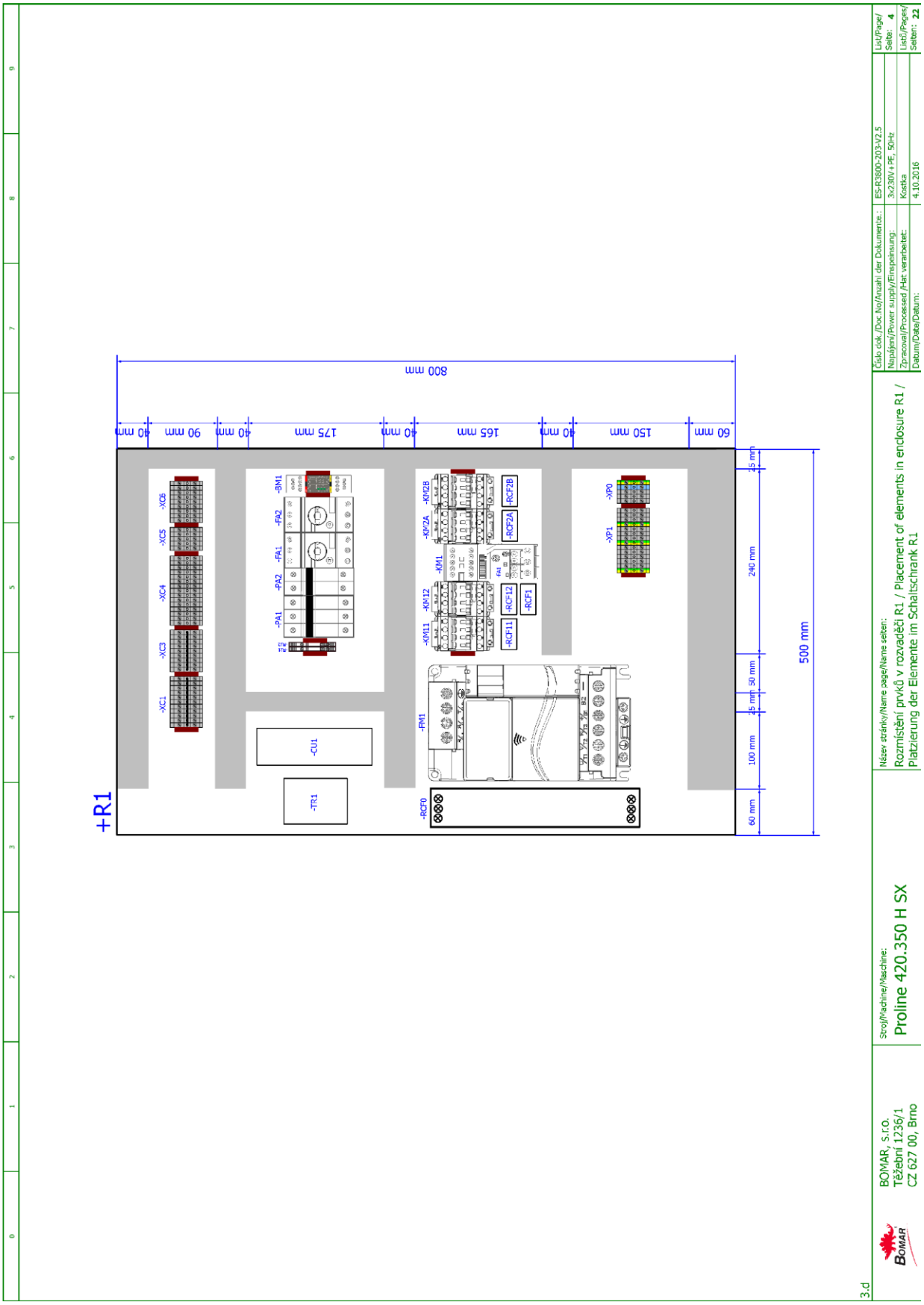
+R1
-XC1
-XC3
-XC4
-XC5
-XC6
-PA1
-PA2
-FA2
-FA1
-BM1
-CU1
-TR1
-RCF0
-FM1
-KM11
-KM12
-KM1
-KM2A
-KM2B
-RCF11
-RCF12
-RCF1
-RCF2A
-RCF2B
-XP1
-XP0
40 mm
90 mm
40 mm
175 mm
40 mm
165 mm
40 mm
150 mm
60 mm
800 mm
60 mm
100 mm
25 mm
50 mm
25 mm
240 mm
25 mm
500 mm
Číslo dok./Doc.No/Anzahl der Dokumente:
ES-R3800-203-V2.5
Napájení/Power supply/Einspeisung:
3x230V+PE, 50Hz
Zpracoval/Processed /Hat: verarbeitet:
Kostka
Datum/Date/Datum:
4.10.2016
List/Page/
Seite: 4
Listů/Pages/
Seiten: 22
Název stránky/Name page/Name seiten:
Rozmístění prvků v rozváděči R1 / Placement of elements in enclosure R1 /
Platzierung der Elemente im Schaltschrank R1
Stroj/Machine/Maschine:
Proline 420.350 H SX
BOMAR, s.r.o.
Těžební 1236/1
CZ 627 00, Brno
3.d

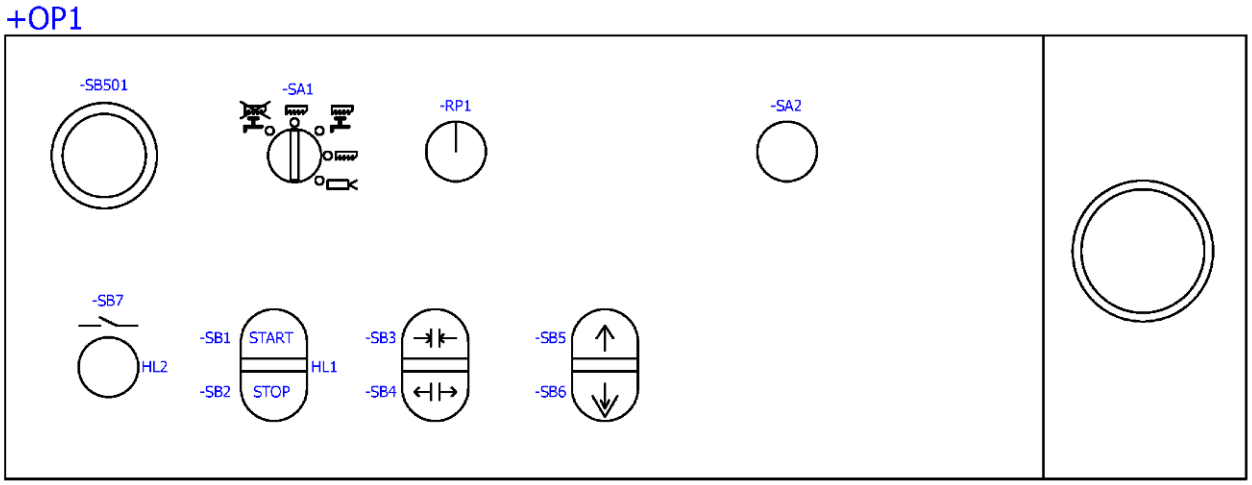

4

BOMAR, s.r.o. Těžební 1236/1 CZ 627 00, Brno	Stroj/Machine/Maschine: Proline 420.350 H SX	Název stránky/Name page/Name seiten: Ovládací panel OP1 / Control panel OP1 / Bedienpult OP1	Číslo dok./Doc.No/Anzahl der Dokumente.: ES-R3800-203-V2.5 Napájení/Power supply/Einspeisung: 3x230V + PE, 50Hz Zpracoval/Processed /Hat verarbeitet: Kostka Datum/Date/Datum: 23.3.2016	List/Page/Seite: 5 Listů/Pages/Seiten: 22

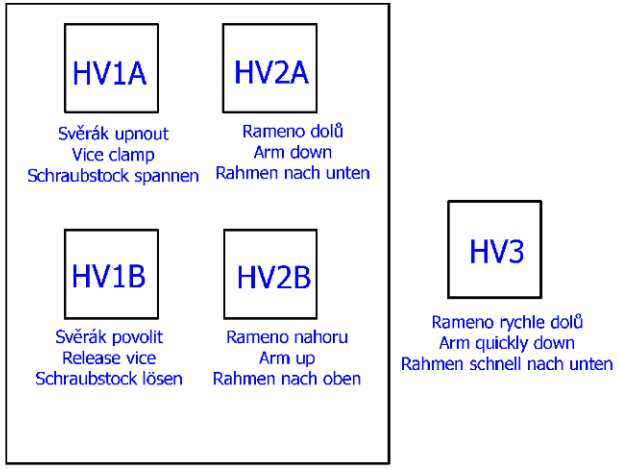

5

BOMAR, s.r.o. Těžební 1236/1 CZ 627 00, Brno	Stroj/Machine/Maschine: Proline 420.350 H SX	Název stránky/Name page/Name seiten: Rozmístění hydraulických ventilů / Placement of Hydraulic valves / Platzierung die Hydroventile	Číslo dok./Doc.No/Anzahl der Dokumente.: ES-R3800-203-V2.5 Napájení/Power supply/Einspeisung: 3x230V + PE, 50Hz Zpracoval/Processed /Hat verarbeitet: Kostka Datum/Date/Datum: 23.3.2016	List/Page/Seite: 6 Listů/Pages/Seiten: 22

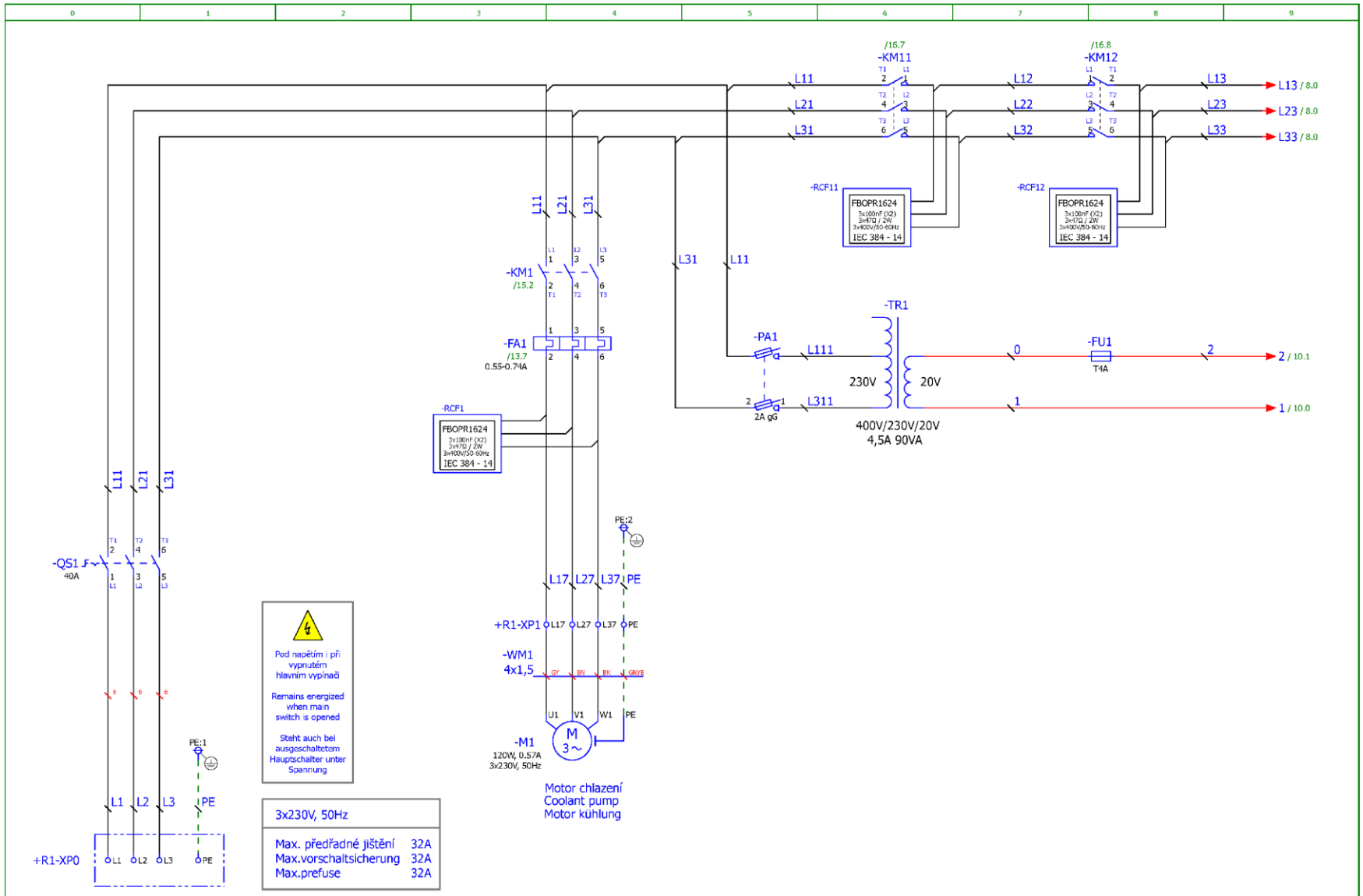

Schémata
Schemas
Schematics

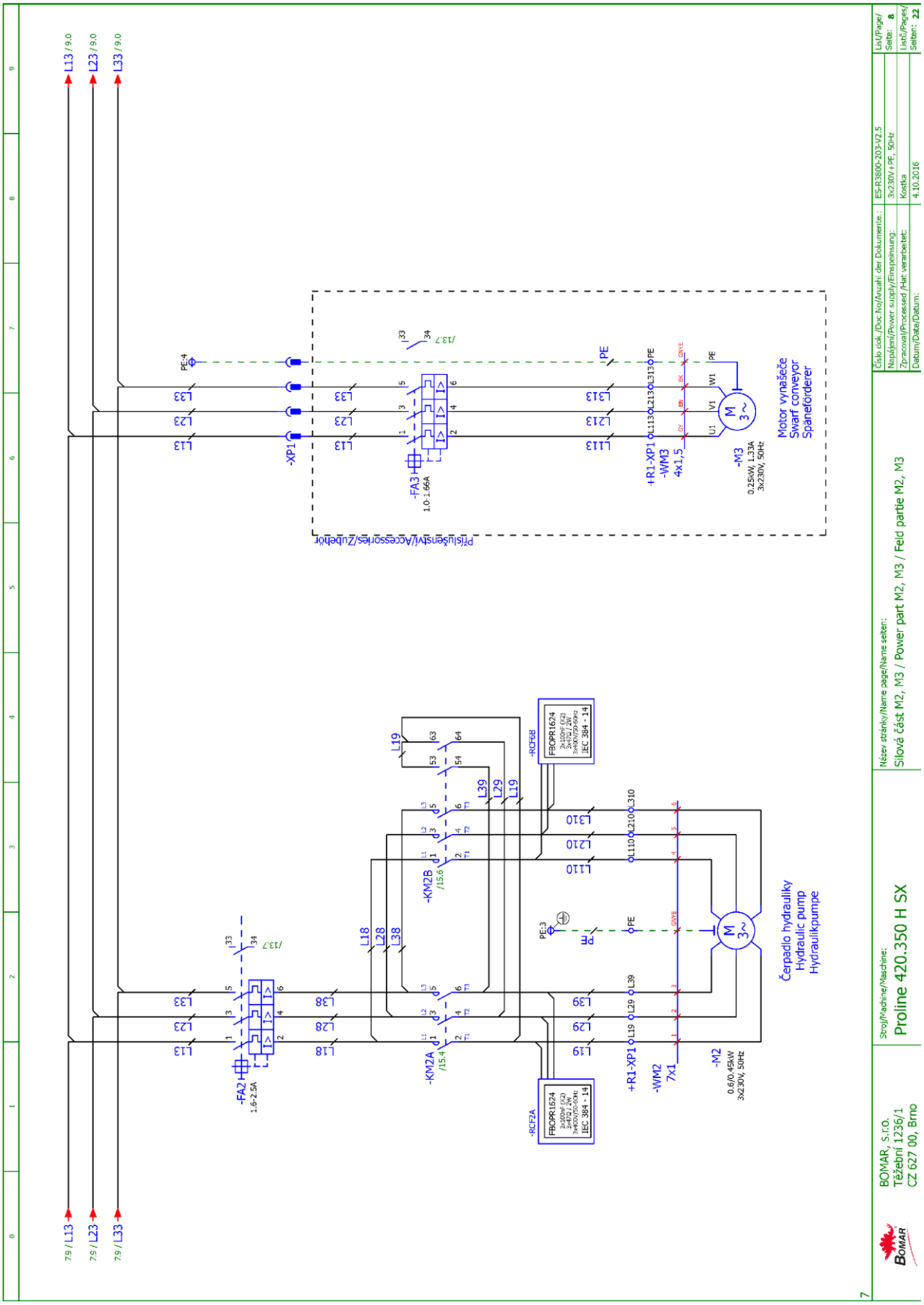
L13 / 9.0
L23 / 9.0
L33 / 9.0
79 / L13
79 / L23
79 / L33
-XP1
PE-4
-FA3
1.0-1.66A
/13.7
+R1-XP1
-WM3
4x1,5
-M3
0.25kW, L.33A
3x230V, 50Hz
Motor vynášeče
Swarf conveyor
Spaneförderer
Příslušenství/Accessories/Ženbeltöt
-FA2
1.6-2.5A
-KM2A
/15.4
-KM2B
/15.6
-RCF2A
-RCF6B
FBOPR1624
IEC 384 - 14
PE-3
-M2
0.6/0.45kW
3x230V, 50Hz
+R1-XP1
-WM2
7x1
Čerpadlo hydrauliky
Hydraulic pump
Hydrauliikpumpe
Číslo dok./Doc.No/Anzahl der Dokumente:
ES-R3800-203-V2.5
Napájení/Power supply/Einspeisung:
3x230V+PE, 50Hz
Zpracoval/Processed /Hat verarbeitet:
Kostka
Datum/Date/Datum:
4.10.2016
List/Page/
Seite: 8
Listů/Pages/
Seiten: 22
Název stránky/Name page/Name seiten:
Silová část M2, M3 / Power part M2, M3 / Feld partie M2, M3
Stroj/Machine/Maschine:
Proline 420.350 H SX
BOMAR, s.r.o.
Těžební 1236/1
CZ 627 00, Brno

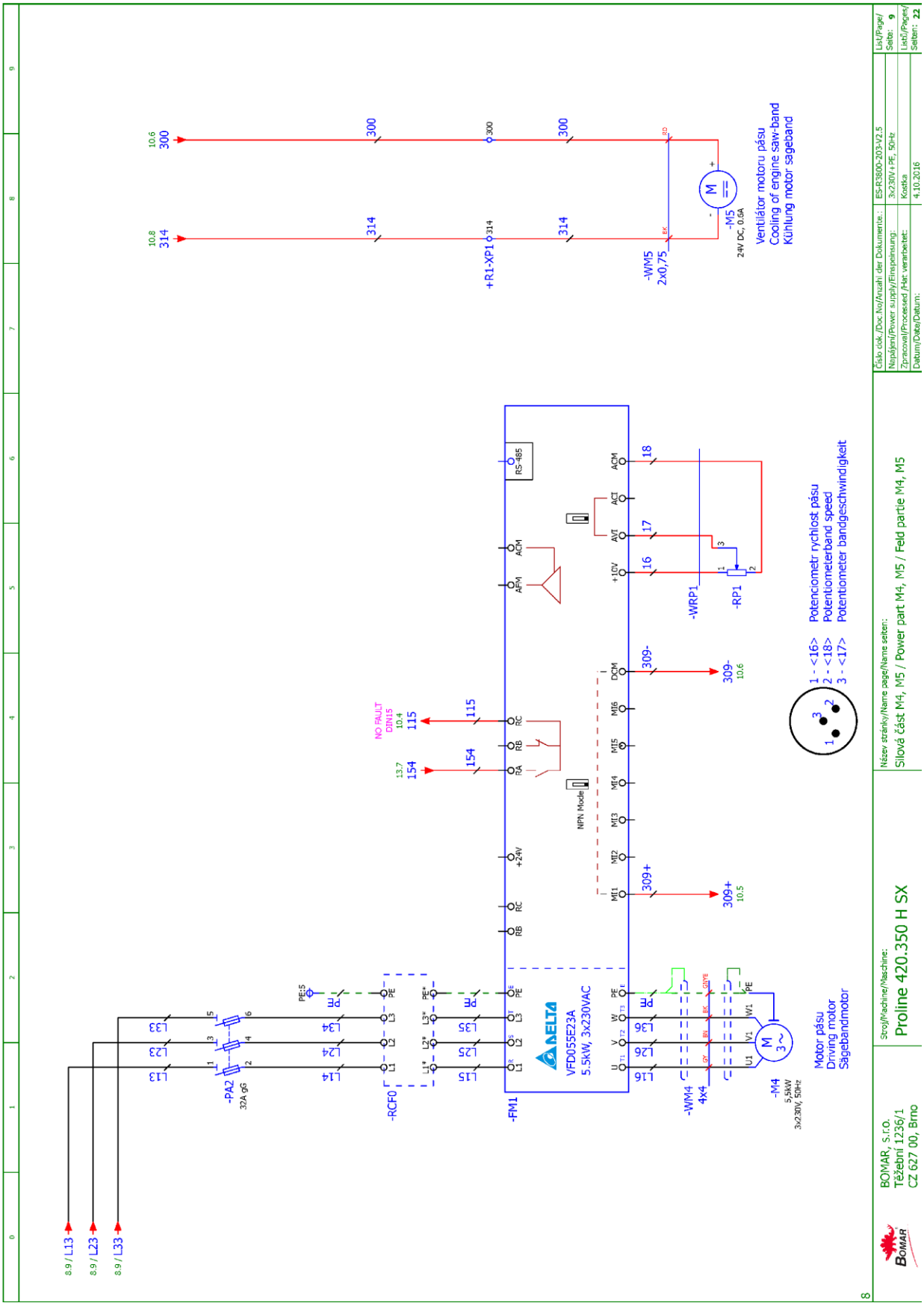

Schémata
Schemas
Schematics

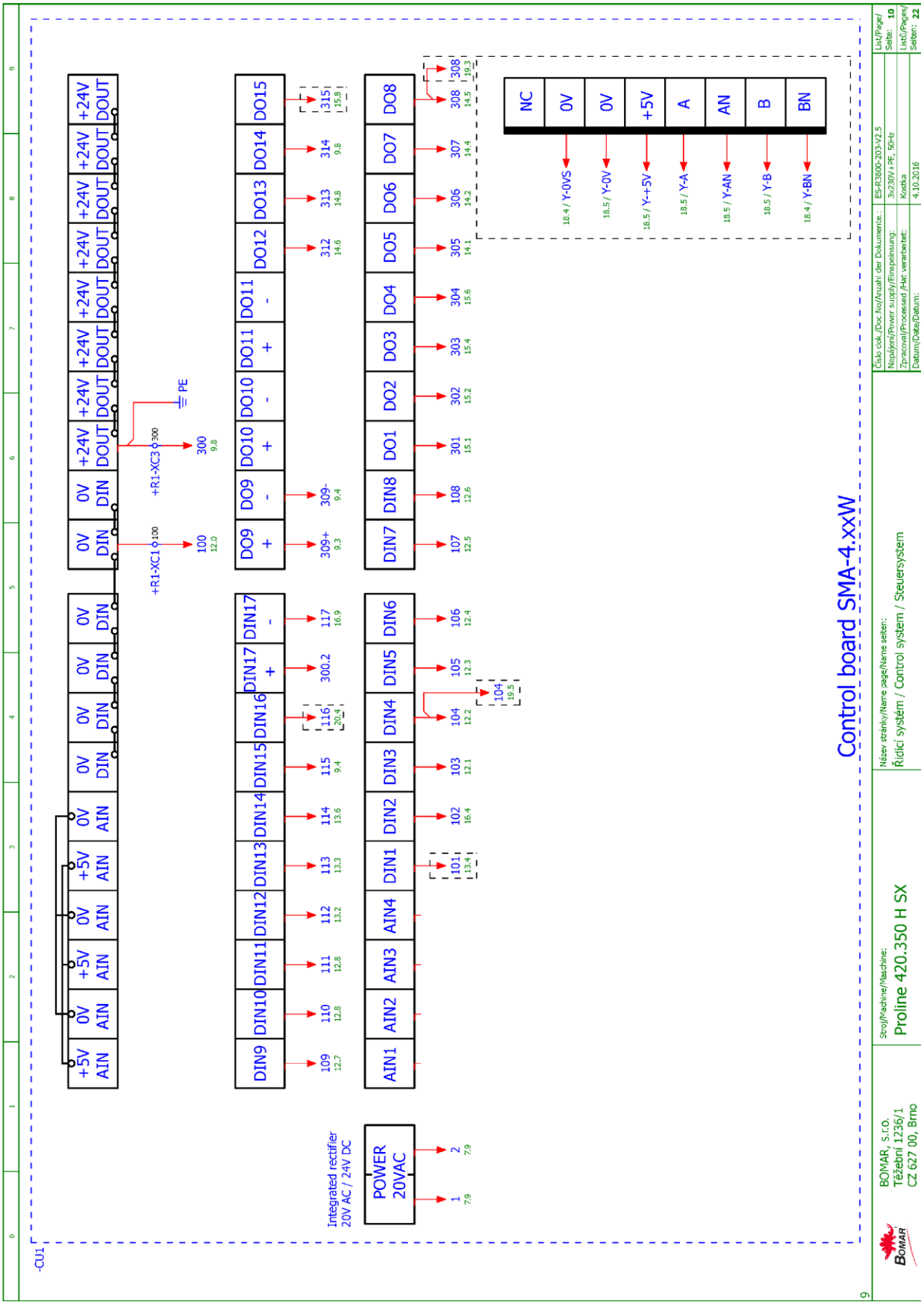
Control board SMA-4.xxW
-CU1
POWER 20VAC
Integrated rectifier 20V AC / 24V DC
AIN1 AIN2 AIN3 AIN4 DIN1 DIN2 DIN3 DIN4 DIN5 DIN6 DIN7 DIN8 DO1 DO2 DO3 DO4 DO5 DO6 DO7 DO8
DIN9 DIN10 DIN11 DIN12 DIN13 DIN14 DIN15 DIN16 DIN17 DO9 DO10 DO11 DO12 DO13 DO14 DO15
+5V AIN 0V AIN 0V AIN +5V AIN 0V AIN 0V AIN 0V DIN 0V DIN 0V DIN 0V DIN 0V DIN 0V DIN +24V DOUT +24V DOUT +24V DOUT +24V DOUT +24V DOUT +24V DOUT +24V DOUT +24V DOUT
+R1-XC1
+R1-XC3
PE
NC 0V 0V +5V A AN B BN
18.4 / Y-0VS
18.5 / Y-0V
18.5 / Y-+5V
18.5 / Y-A
18.5 / Y-AN
18.5 / Y-B
18.4 / Y-BN
BOMAR, s.r.o.
Těžební 1236/1
CZ 627 00, Brno
Stroj/Machine/Maschine:
Proline 420.350 H SX
Název stránky/Name page/Name seiten:
Řídicí systém / Control system / Steuersystem
Číslo dok./Doc.No/Anzahl der Dokumente:
ES-R3800-203-V2.5
Napájení/Power supply/Einspeisung:
3x230V+PE, 50Hz
Zpracoval/Processed /Hat: verarbeitet:
Kostka
Datum/Date/Datum:
4.10.2016
List/Page/Seite: 10
Listů/Pages/Seiten: 22

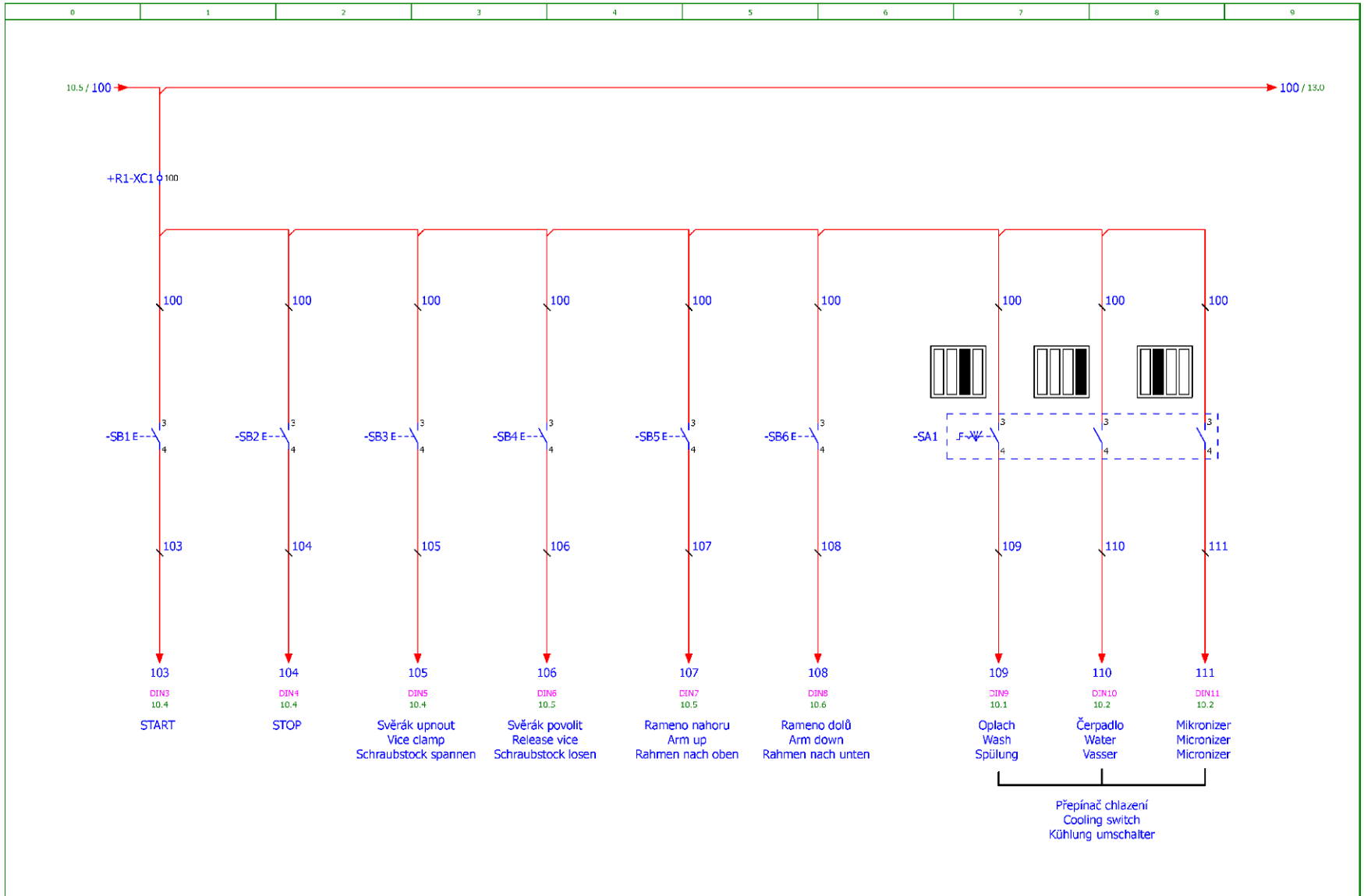

10

BOMAR, s.r.o.
Těžební 1236/1
CZ 627 00, Brno

Stroj/Machine/Maschine: Proline 420.350 H SX

Název stránky/Name page/Name seiten: Tlačítka ovládací panel OP1 / Button control panel OP1 / Taste Bedienpult OP1

Číslo dok./Doc.No/Anzahl der Dokumente.:	ES-R3600-203-V2.5
Napájení/Power supply/Einspeisung:	3x230V + PE, 50Hz
Zpracoval/Processed /Hat verarbeitet:	Kostka
Datum/Date/Datum:	23.3.2016

List/Page/Seite: 12
Listů/Pages/Seiten: 22

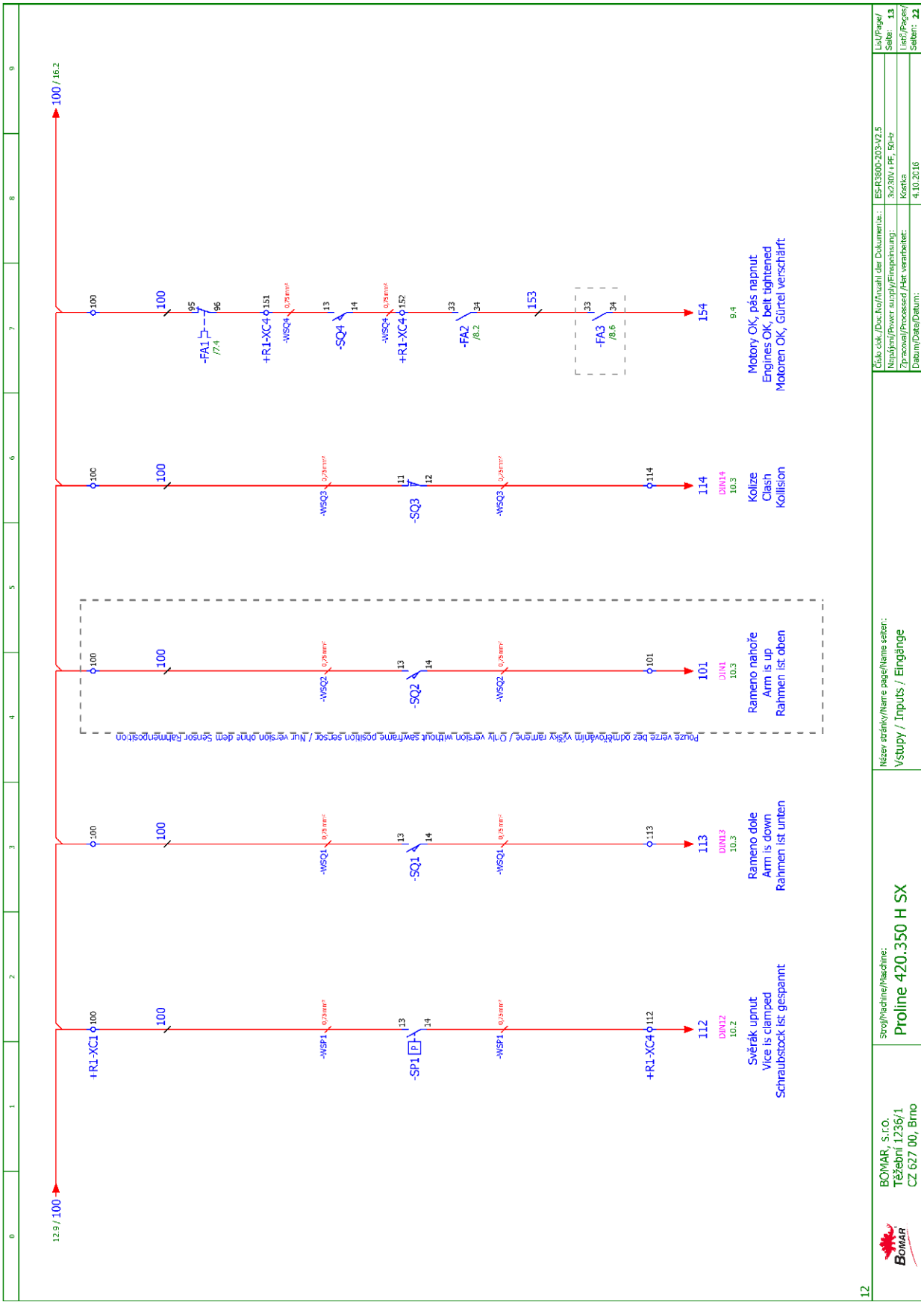
Rameno nahoře
Arm is up
Rahmen ist oben
Rameno dole
Arm is down
Rahmen ist unten
Svěrák upnut
Vice is clamped
Schraubstock ist gespannt
Kolize
Clash
Kollision
Motory OK, pás napnut
Engines OK, belt tightened
Motoren OK, Gürtel verschärft
BOMAR, s.r.o.
Těžební 1236/1
CZ 627 00, Brno
Proline 420.350 H SX
Vstupy / Inputs / Eingänge
ES-R3600-203-V2.5
3x230V + PE, 50~Hz
Kostka
4.10.2016

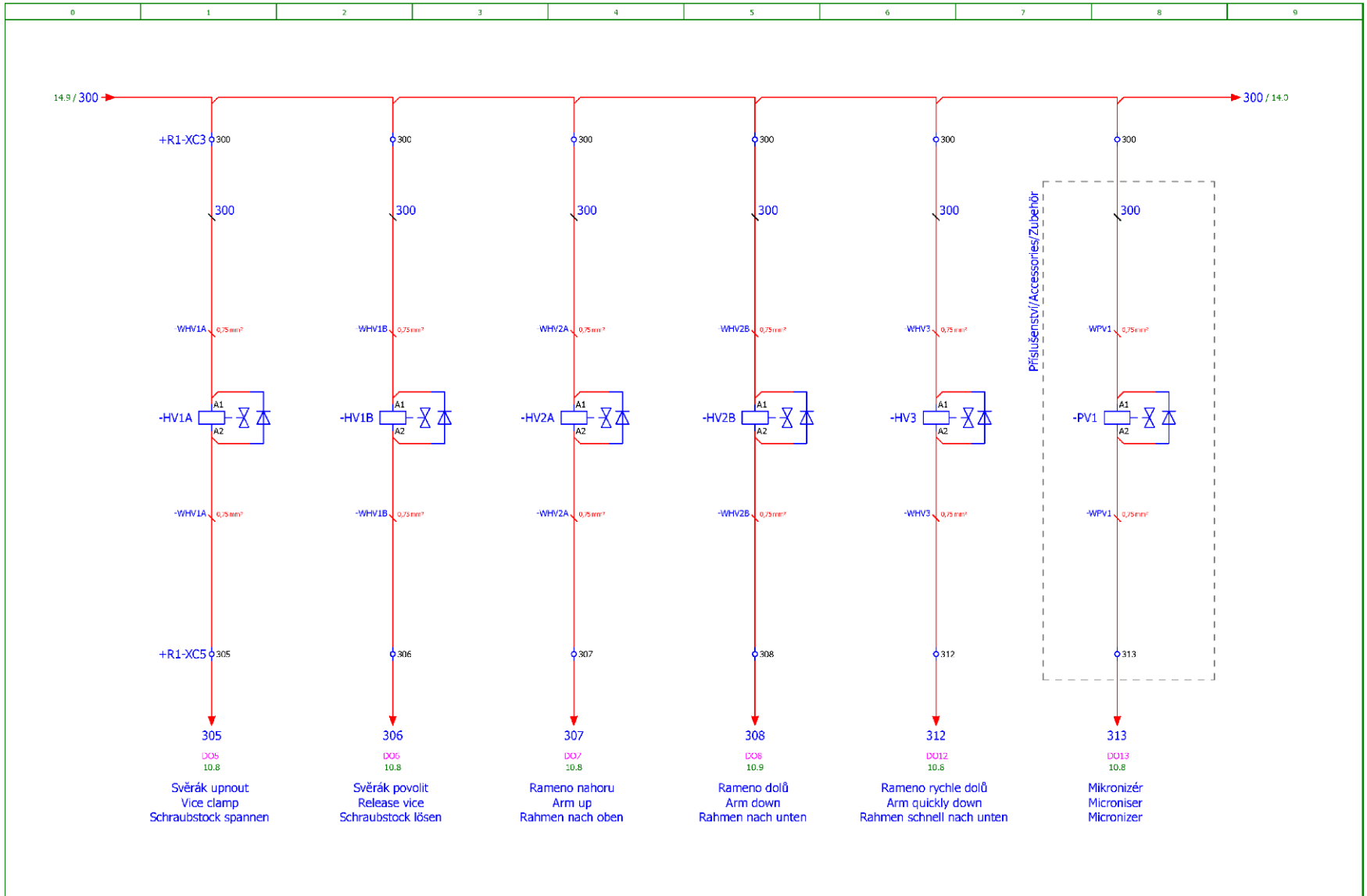

13

BOMAR, s.r.o.
Těžební 1236/1
CZ 627 00, Brno

Stroj/Machine/Maschine: Proline 420.350 H SX

Název stránky/Name page/Name seiten: Hydraulické ventily / Hydraulic valves / Hydroventile

Číslo dok./Doc.No/Anzahl der Dokumente.:	ES-R3800-203-V2.5
Napájení/Power supply/Einspeisung:	3x230V + PE, 50Hz
Zpracoval/Processed /Hat verarbeitet:	Kostka
Datum/Date/Datum:	23.3.2016

List/Page/Seite: 14
listů/Pages/Seiten: 22

Schémata
Schemas
Schematics

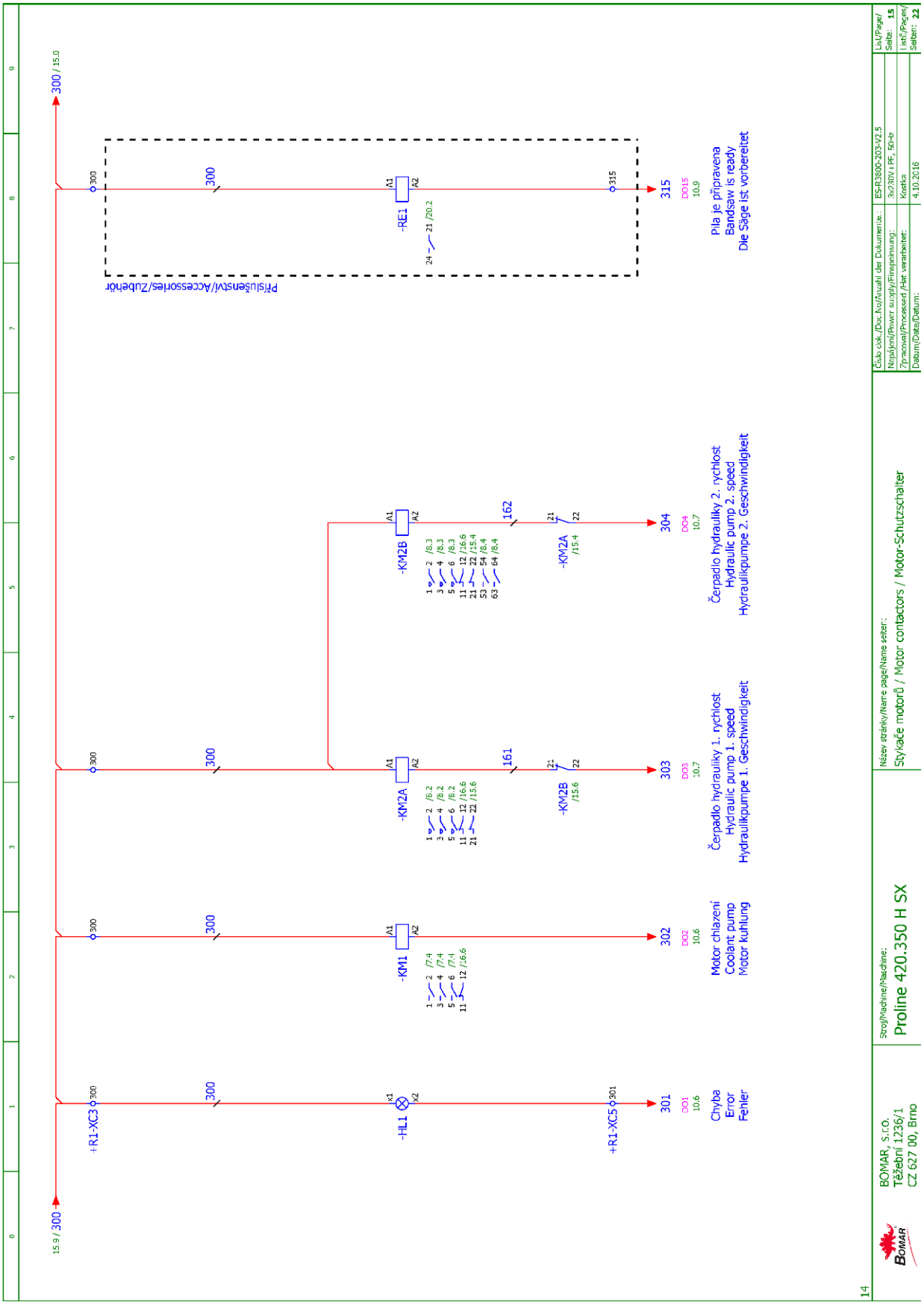
15.9 / 300
300 / 15.0
+R1-XC3
-HL1
Chyba
Error
Fehler
DO1
10.6
+R1-XC5
301
-KM1
Motor chlazení
Coolant pump
Motor kühlung
DO2
10.6
302
-KM2A
Čerpadlo hydrauliky 1. rychlost
Hydraulic pump 1. speed
Hydraulikpumpe 1. Geschwindigkeit
DO3
10.7
303
-KM2B
Čerpadlo hydrauliky 2. rychlost
Hydraulic pump 2. speed
Hydraulikpumpe 2. Geschwindigkeit
DO4
10.7
304
-RE1
Příslušenství/Accessories/Zubehör
Pila je připravena
Bandsaw is ready
Die Säge ist vorbereitet
DO15
10.9
315
Číslo dok./Doc.kod/Anzahl der Dokumente:
ES-R3600-203-V2.5
Napájení/Power supply/Einspeisung:
3x230V + PE, 50~Hz
Zpracoval/Processed /Hat verarbeitet:
Kostka
Datum/Date/Datum:
4.10.2016
List/Page/
Seite: 1.5
Listů/Pages/
Seiten: 2.2
Název stránky/Name page/Name seiten:
Stykače motorů / Motor contactors / Motor-Schutzschalter
Stroj/Machine/Maschine:
Proline 420.350 H SX
BOMAR, s.r.o.
Těžební 1236/1
CZ 627 00, Brno
14

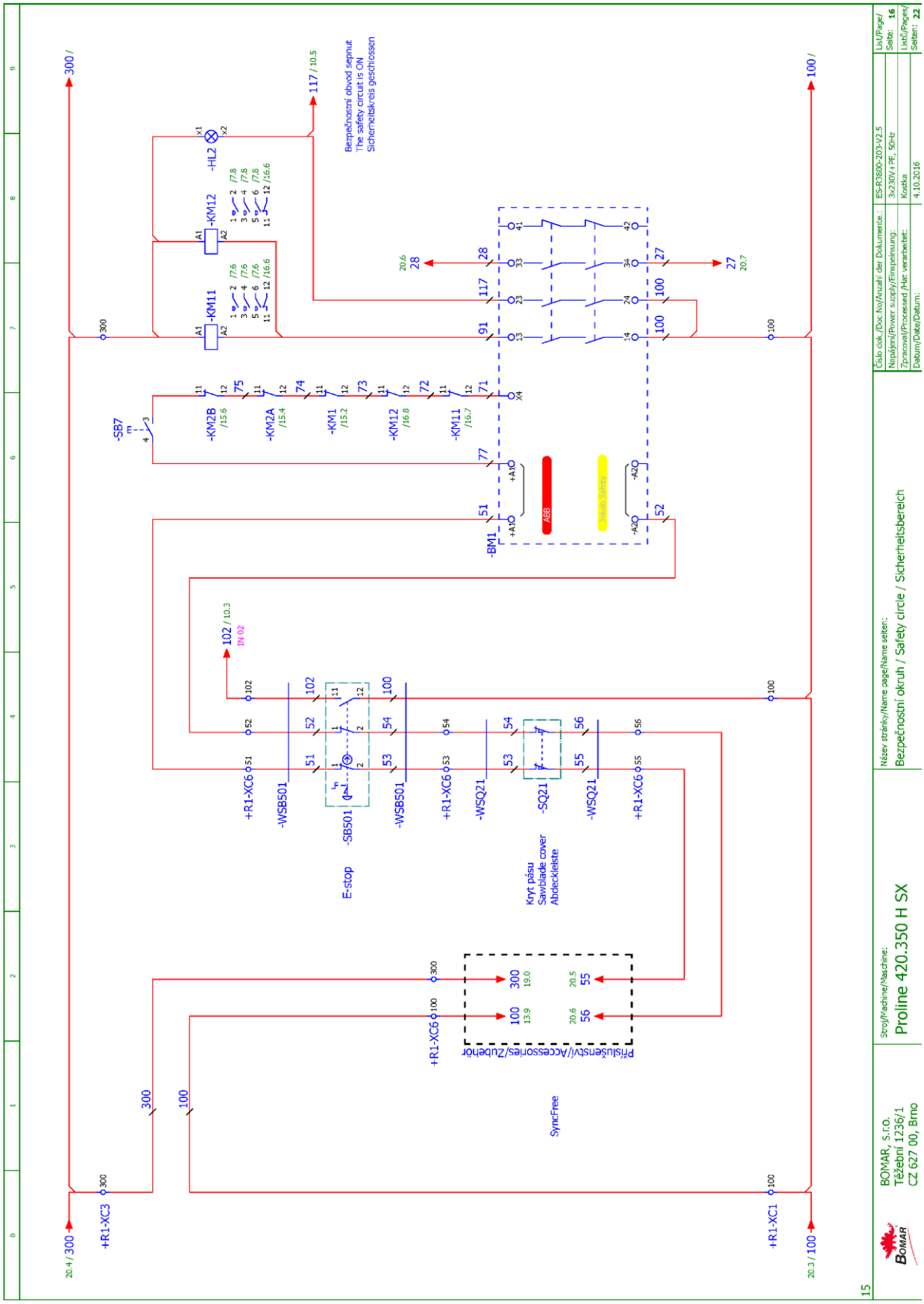

Schémata
Schemas
Schematics

Pouze verze s odměřování výšky ramene/Only version with sawframe position sensor/Nur version mit dem Sensor Rahmenposition

SN1

Snímač výšky ramene Sawframe position sensor Rahmenposition Sensor		Kabel HELU-Flexi 7x0.14
+	HNĚDÁ BROWN BRAUN	HNĚDÁ+MODRÁ BROWN+BLUE BRAU+BLAU
-	SEDÁ GREY GRAU	SEDÁ GREY GRAU
A	RUŽOVÁ PINK ROSAROT	ŽLUTÁ YELLOW GELB
AN	ZELENÁ GREEN GRÜN	RŮŽOVÁ PINK ROSA
B	ŽLUTÁ YELLOW GELB	BÍLÁ WHITE WEIS
BN	BÍLÁ WHITE WEIS	ZELENÁ GREEN GRÜN
	ČERNÁ BLACK SCHWARZ	STÍNĚNÍ SHIELD LEITUNGSSCHIRM

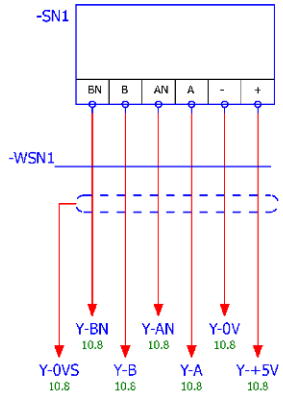

16

BOMAR, s.r.o. Těžební 1236/1 CZ 627 00, Brno	Stroj/Machine/Maschine: Proline 420.350 H SX	Název stránky/Name page/Name seiten: Snímač výšky ramene / Sawframe position sensor / Rahmenposition sensor	Číslo dok./Doc.No/Anzahl der Dokumente.: ES-R3800-203-V2.5 Napájení/Power supply/Einspeisung: 3x230V + PE, 50Hz Zpracoval/Processed /Hat verarbeitet: Kostka Datum/Date/Datum: 23.3.2016

List/Page/Seite: 18
listů/Pages/Seiten: 22

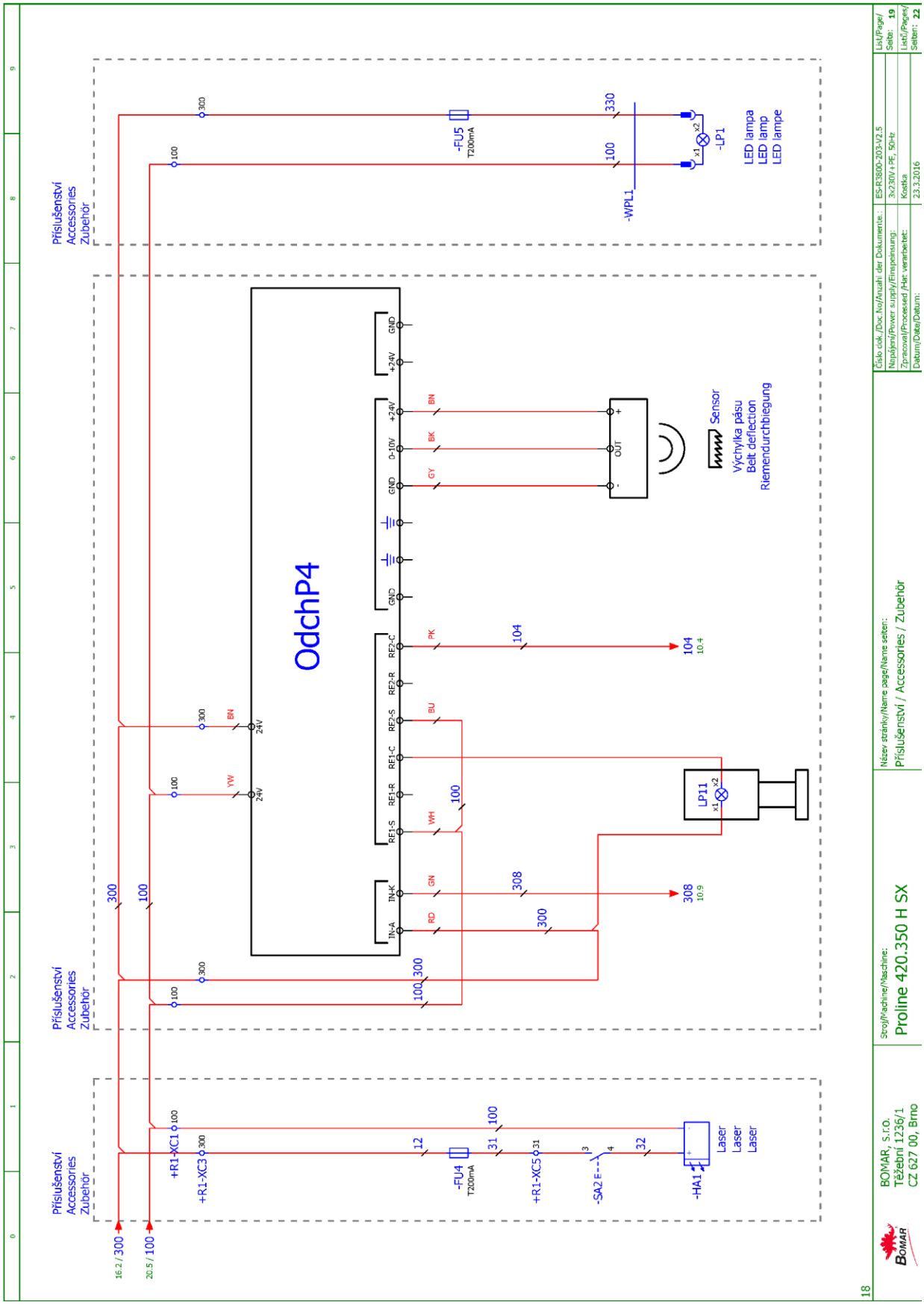

Schémata
Schemas
Schematics

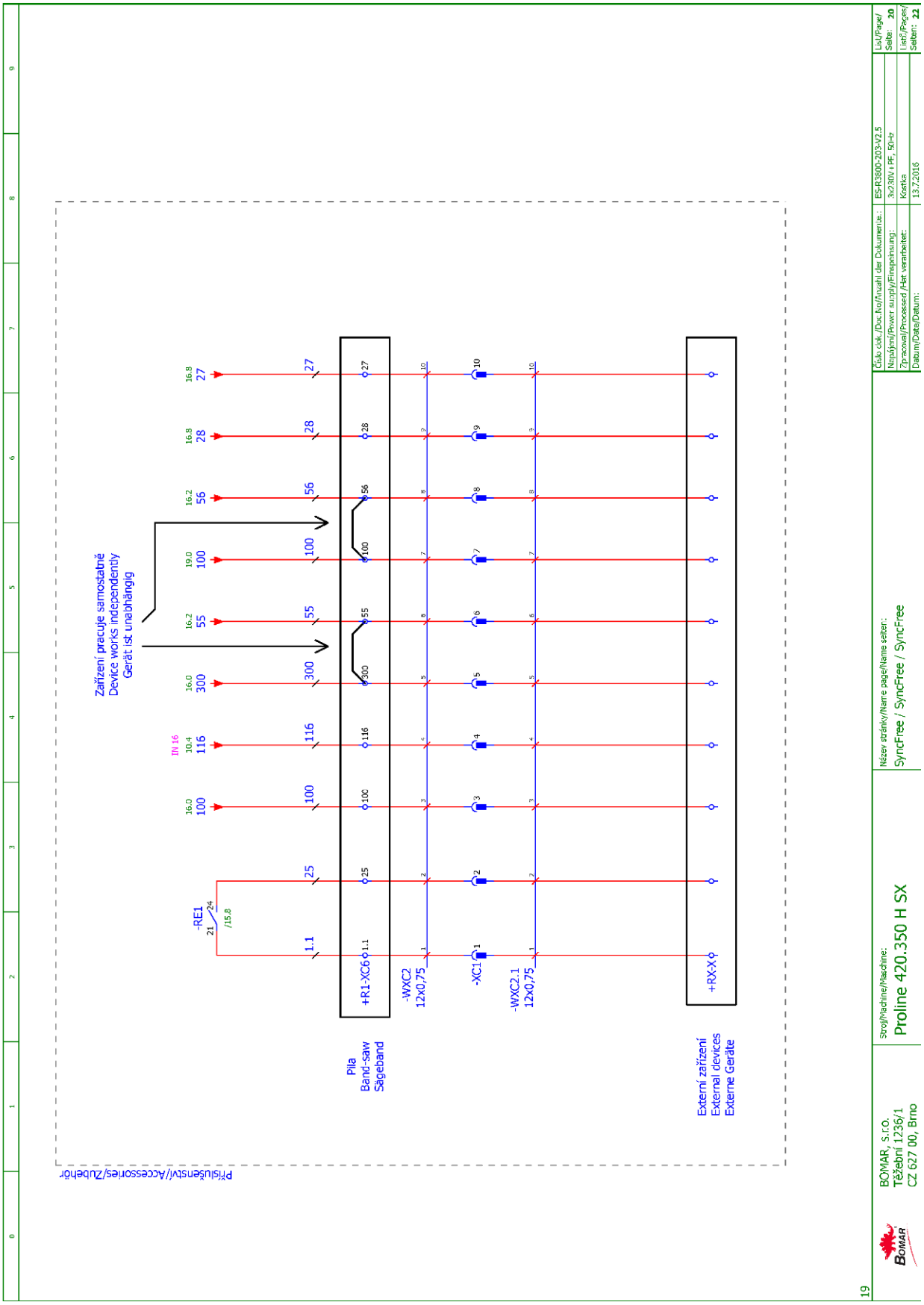
Zařízení pracuje samostatně
Device works independently
Gerät ist unabhängig
-RE1
+R1-XC6
-WXC2
12x0,75
-XC1
-WXC2.1
12x0,75
+RX-X
Pila
Band-saw
Sägeband
Externí zařízení
External devices
Externe Geräte
Příslušenství/Accessories/Zubehör
BOMAR, s.r.o.
Těžební 1236/1
CZ 627 00, Brno
Stroj/Machine/Maschine:
Proline 420.350 H SX
Název stránky/Name page/Name seiten:
SyncFree / SyncFree / SyncFree
ES-R3600-203-V2.5
3x230V + PE, 50~Hz
Kostka
13.7.2016
List/Page/
Seite: 20
Listů/Pages/
Seiten: 22
19

6.3. Hydraulické schéma / Hydraulikschema / Hydraulic scheme

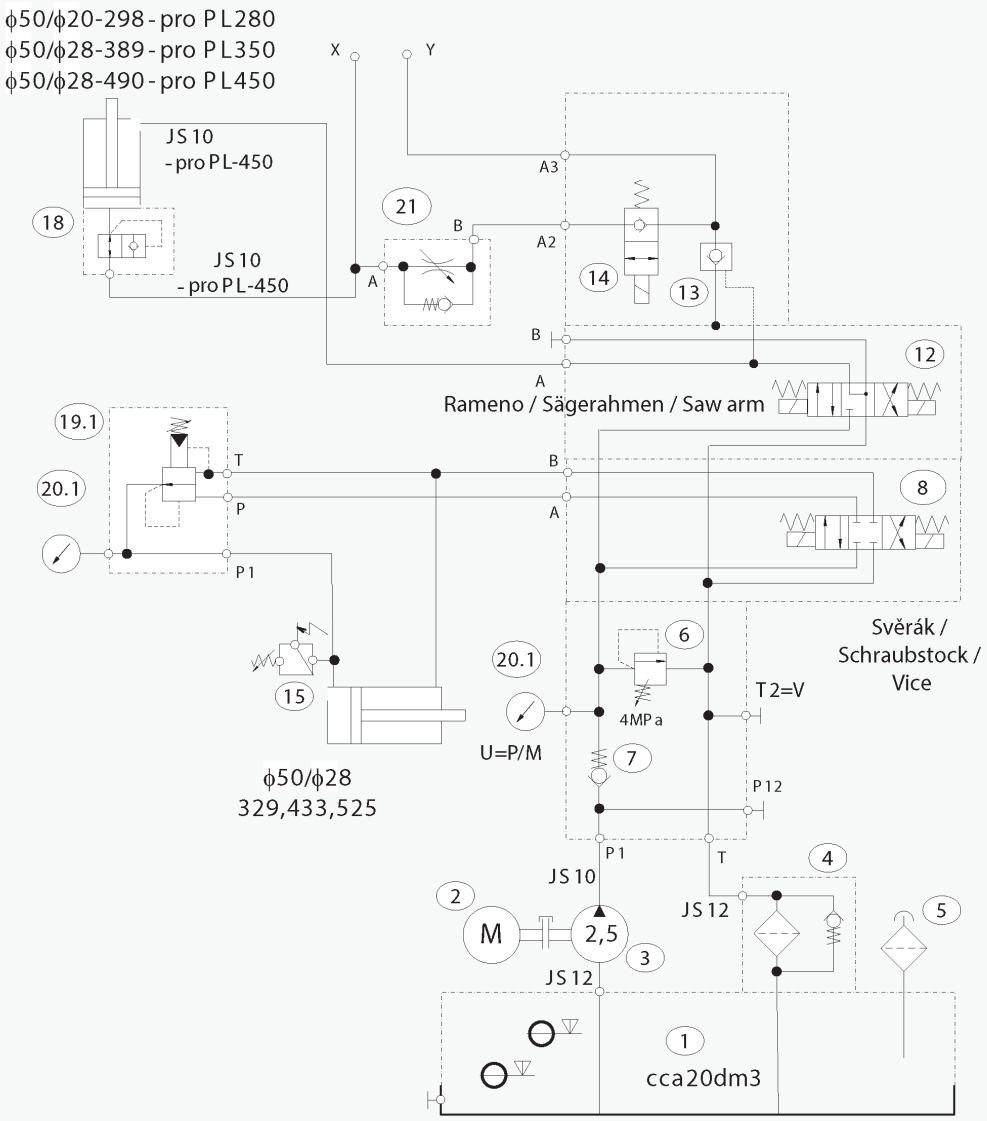

205.R216-00
Proline 280/350/450 H
24.5.2016

Typ / Type / Type	Proline 280/350/450 H
Hydraulický agregát / Hydroaggregat / Hydro aggregat	92.001.077 (FMW), S001-137-2, PPM-AC0, 48/0, 6kW/300/1500-PG1/2,5-TM20-CB03-FR
Neuvedené světlosti / Unerwähnt Lichtbreite / Unlisted inside diameters	JS6
Výstupní šroubení / Ausgangschraubung / Output screewing	G1/4“

Pmax	4,5 MPa
Q	3,3 / 6,6 dm³/min
n	1500 / 3000 ot./min
P	0,48 / 0,6 kW

Regulační závlek stroje: /
Regelungskreis der Anlage für Andruck in den Schnitt: /
Control circuit for the machine: PL450

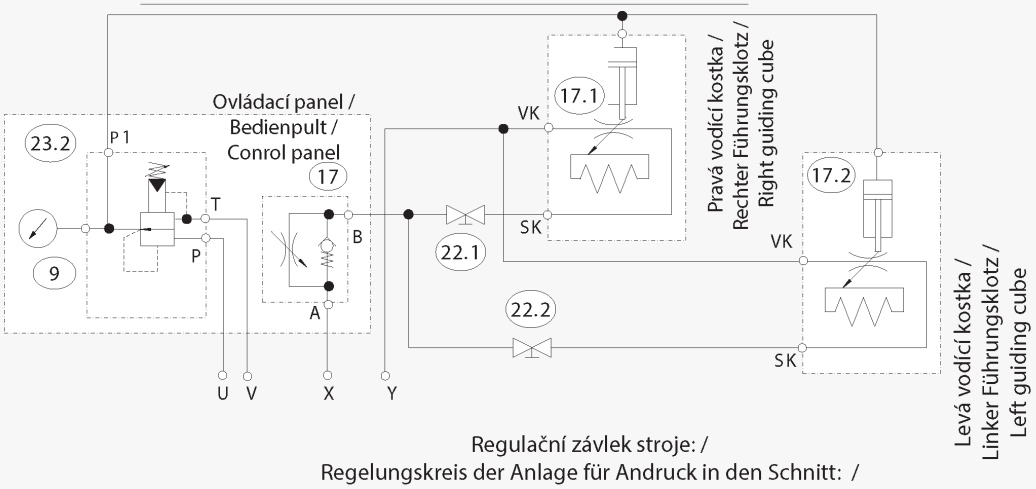

Regulační závlek stroje: /
Regelungskreis der Anlage für Andruck in den Schnitt: /
Control circuit for the machine:
PL-280; PL-350

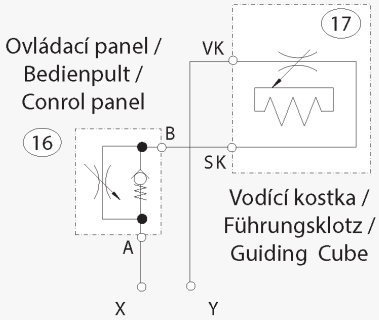

Regulace upínací síly (prvky č. 19+20) jen na přání zákazníka/
Regelung der Spannkraft (Elemente Nr. 19+20) nur auf Wunsch des Kunden/
Clamping force control (elements No. 16+17+18) by customer's request only

V případě el. sítě 3x230V zaměnit elmotor za 92.001.139/
Bei dem Stromnetz 3x230V Elektromotor durch 92.001.139 ersetzen/
In the case of the electric mains 3x230V, replace the electric motor with 92.001.139

U stroje velikosti 460 jsou 2 vodící regul. kostky (poz. 14) paralelně propojené
a mají hydraulický přítlak do řezu, redukčák (19.2+20.2) klasicky v ovlád.pultu a napojen např. pomocí vývodu X, /
Bei der Anlage Gr. 460 sind 2 Führungswürfel (Pos. 14) parallel verbunden und haben hydraulischen
Andruck in den Schnitt, Reduzierventil (19.2+20.2) traditionell in Bedienungstafel und z.B.
mittels Ausgangs X, Y angeschlossenY/
For the machine size 460, there are 2 guide control cubes (pos. 14) connected parallely,
which have hydraulic thrust to cut, reducer (19.2+20.2) at the control panel as usual, connected,
for example, by means of the outlet X, Y

205.R216-00
Proline 280/350/450 H
24.5.2016

Typ / Type / Type
Proline 280/350/450 H

Hydraulický agregát / Hydroaggregat / Hydro aggregat
92.001.077 (FMW), S001-137-2, PPM-AC0, 48/0, 6kW/300/1500-PG1/2,5-TM20-CB03-FR

Neuvedené světlosti / Unerwähnt Lichtbreite / Unlisted inside diameters
JS6

Výstupní šroubení / Ausgangschraubung / Output screewing
G1/4"

Pmax	4,5 MPa
Q	3,3 / 6,6 dm³/min
n	1500 / 3000 ot./min
P	0,48 / 0,6 kW

Poz.	Název položky		ks	Číslo skladové položky
Pos.	**Bezeichnung**		**Menge**	**Artikelnummer im Lagerhaus**
Pos.	**Item**		**Pcs.**	**Stock Item Number**
1	Nádrž / Behälter / Tank	TM 13,5/S, SPEC. (cca20dm3)	1	
2	Elektromotor / Elektromotor / Electromotor	0,48/0,6 kW 400/230 V, 50 Hz	1	
3	Hydrogenerátor / Hydraulikgenerator / Hydrogenerator	10A2, 5X053G, 2,5 cm3/ot.	1	92.153.132
4	Zpětný filtr / Rückschlagfilter / Charge-back filter	MPF0301AG1	1	92.153.131
5	Nalévací zátka / Stopfen / Fill stopper	CPT-MD-FA/1"	1	92.019.007
6	Přepouštěcí ventil / Bypaßventil / By pass valve	MO-020/32	1	92.159.001
7	Jednosměrný ventil / Einwegventil / One-way valve	CV08-20-0-N-4 V205-007-1-01	1	92.160.001
8	Rozváděč / Schaltschrank / Switchboard	DVE03-S01-B4-C24-20-T1-M1	1	92.101.041
9	Manometr / Manometer / Manometer	∅68 s/mit/with Glycerin	1	
10	--	--	--	
11	-	-	-	
12	Rozváděč / Schaltschrank / Switchboard	DVE03-S04-Bx-C24/20/T1-M1	1	92.101.034
13	Hydraulický zámek / Hydraulisches Schloß / Hydraulic lock	PC08-30-0-N	1	92.103.007
14	Sedlový ventil / Sattelventil/ Saddle valve	SV08-20-0-N-24EG	1	92.101.035
15	Tlakový spínač / Druckschalter / Pressure switch	Kod/Kode/Code 0166415031059 20-50bar	1	92.201.003
16	Škrtící ventil / Drosselventil / Throttle-valve	VS01-04-R2, 5-0S	2	92.152.001
17	Kostka regulace / Regulationklotz / Regulation cube	Manuální přítlak/Manuellen Druck/Manual pressure - (Proline 320.280 a/und/ and Proline 420.350)	1	251.078

		Hydraulický přítlak/Hydraulikdruck/Hydraulic pressure (Proline 520.450)	2	251.346
18	Ventil pojistný / Sicherungsventil / Retaining valve	VPNH ¼˝	1	92.151.001
19	Redukčný ventil / Reduktionsventil / Control valve	VRN1-06/RV-6,3,	2/1/0	92.154.001
20	Manometr / Manometer / Manometer	Ø68 , 0-60 bar	2/1/0	
21	Zpětný ventil / Rückschlagfilter / Charge-back filter	VJS3-06-005-G1-150	2/0	
22	Kulový ventil /Kugelventil / Globe valve		4/0	
23	Redukčný ventil / Reduktionsventil / Control valve	VRN2-06/S-6R	1/0	92.154.001

Attention!
After all work and cuts on the saw have been completed, the saw arm should always remain in the lower position (e.g. during a long break between cuts, during the saw's resting state or overnight). If the arm remains in the upper position, the hydraulics of the saw arm can be expected to be loaded and overloaded, leading to damage. (The saw arm will start to drop down spontaneously).
It is also important that there is no material left on the saw that needs to be removed from the saw area.

7. Výkresy sestav pro objednání náhradních dílů / Zeichnungen für Bestellung der Ersatzteile / Drawing assemblies for spare parts order

- Při objednávání náhradních dílů vždy uvádějte: typ stroje (např. Proline 320.280 H) , výrobní číslo (např. 125) a rok výroby (např. 1999).

- In die Bestellung der Ersatzteile führen Sie immer an: Maschinentyp (z. B. Proline 320.280 H), Serien Nr. (z. B. 125) und Baujahr (z. B. 1999).

- For spare parts order, you must always to allege: type of machine (for example Proline 320.280 H), serial number and year of construction (for example 1999).

7.1. 201.R300-700
PROLINE 420.350 H

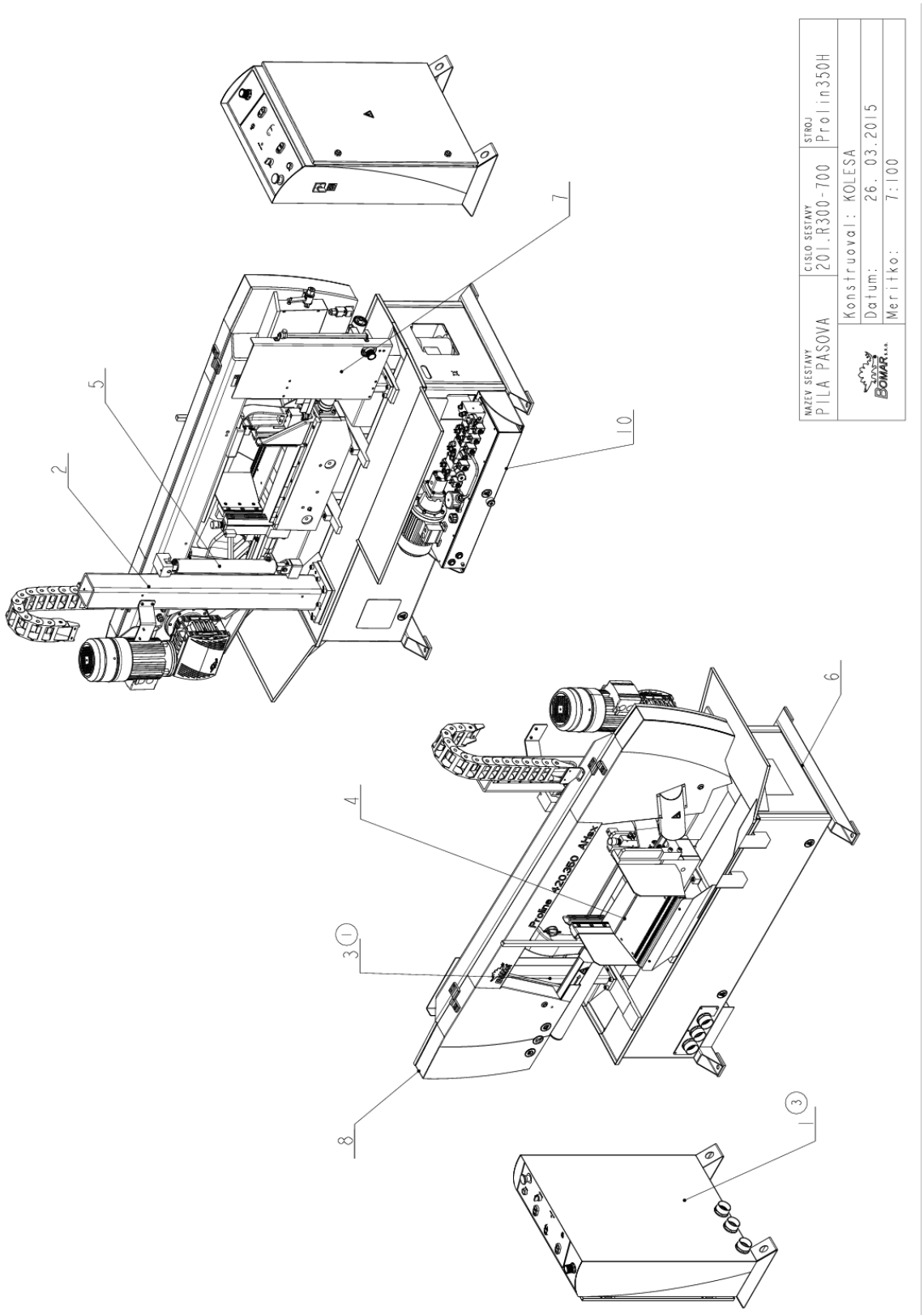

Cislo Sestavy	Ver.	Nazev sestavy
201.R300-700	3	PILA PASOVA/BAND SAW/BANDSÄGE

Poz.	Objednaci cislo	Ver.	Nazev polozky	Rozmer	Ks
1	201.R230-500 (3)	0	OVLADACI PANEL / CONTROL PANEL / BEDIENPULT		1
2	201.R302-050	2	SLOUP / POLE / SÄULE		1
3	201.R302-060 (1)	0	SLOUP / POLE / SÄULE		1
4	201.R303-000	4	SVERAK / VICE / SCHRAUBSTOCK		1
5	201.Y307-010	4	VALEC ZVEDACI / LIFTING CYLINDER / HEBEZYLINDER		1
6	221.R301-700	2	PODSTAVEC / BASE / UNTERSATZ		1
7	221.R302-730	0	ODMEROVANI / POLE / SÄULE		1
8	221.R304-700	5	RAMENO / SAW ARM / SÄGERAHMEN		1
9	30.R399-701	2	STITEK TYPOVY / MACHINE LABEL / MASCHINE SCHILD	P 0.5x65	1
10	92.001.077	0	AGREGAT HYDRAULICKY / HYDRAULIC GENERATOR / HYDRAULIKAGGREGAT		1
11	99.900.039	0	SAMOLEPKA / STICKER / AUFKLEBER	NEBEZP.STLACENI	1
12	99.900.040	0	SAMOLEPKA / STICKER / AUFKLEBER		2
13	99.900.047	0	SAMOLEPKA / STICKER / AUFKLEBER		1
14	99.900.048	0	SAMOLEPKA / STICKER / AUFKLEBER		1
15	99.900.049	0	SAMOLEPKA / STICKER / AUFKLEBER		1
16	99.900.053	0	SAMOLEPKA / STICKER / AUFKLEBER		1
17	99.900.068	0	SAMOLEPKA / STICKER / AUFKLEBER	pouziti vysokozvizneno vozikku	4
18	99.901.044	2	SAMOLEPKA / STICKER / AUFKLEBER		1

1.ZRUSEN SLOUP 201.R302-020 A NAHR.201.R302-060. 229/ZM249 15.10.2013 SLEZACKOVA

2.ZRUSEN OVLADACI PANEL 221.M230-700 A NAHR.221.M230-800169/ZM247 8.12.2014 SLEZACKOVA

3.ZRUSEN OVLADACI PANEL 201.M230-800 A NAHR.201.R230-500. 093/ZM061 7.4.2015 SLEZACKOVA

Cislo Sestavy/Number of assembly/Nummer der Baugruppe; Verze (Ver.)/Version/Version; Nazev sestavy/Assembly title/Name der Baugruppe; Pozice (Poz.)/Position/Position;
Objednaci cislo/Purchase order number/Bestellnummer; Nazev polozky/Volume title/Name der Position; Rozmer/Stock size/Abmessung

7.1.2. 201.R300-700
PROLINE 420.350 H

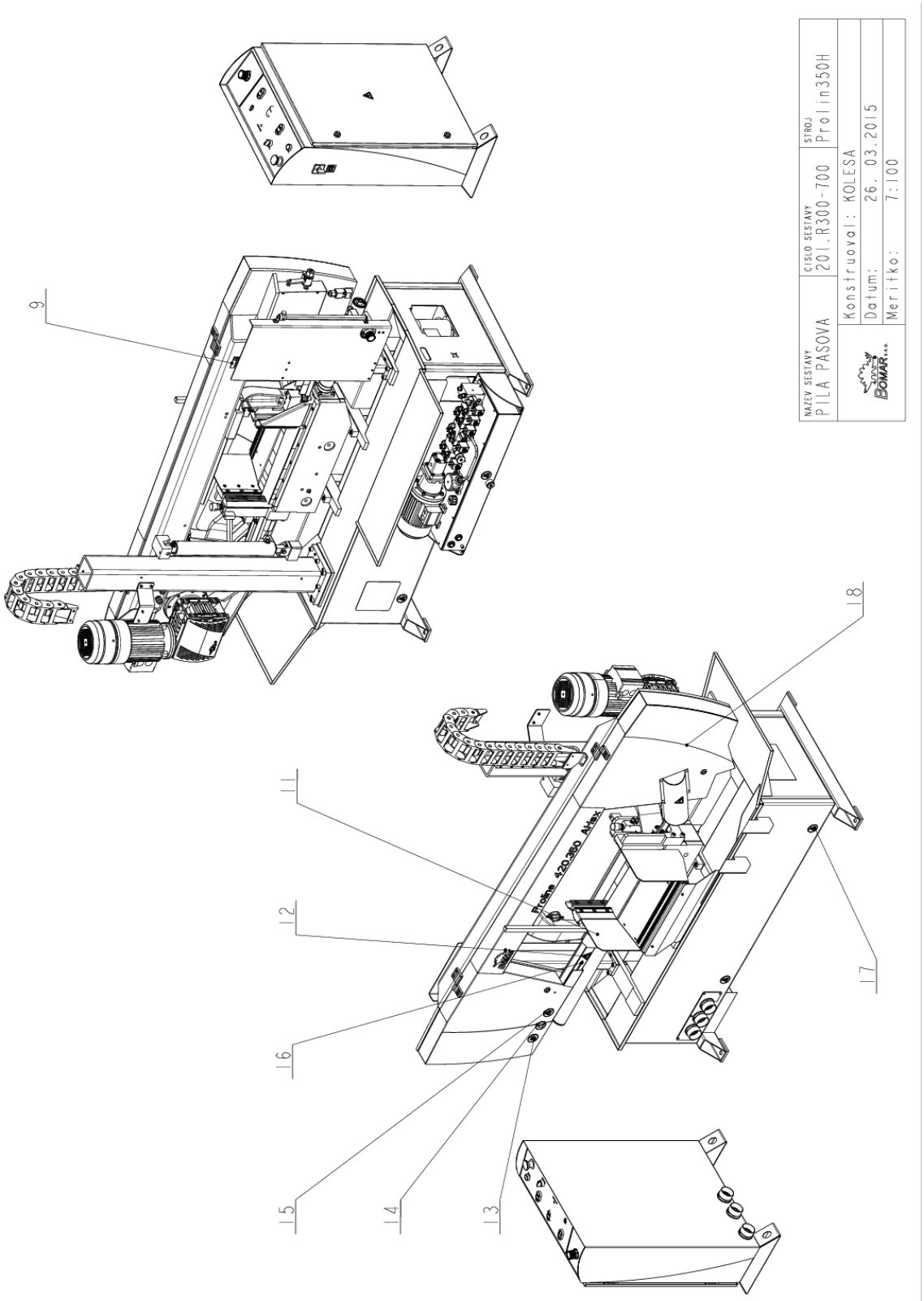

Cislo Sestavy	Ver.	Nazev sestavy
201.R300-700	3	PILA PASOVA/BAND SAW/BANDSÄGE

Poz.	Objednaci cislo	Ver.	Nazev polozky	Rozmer	Ks
1	201.R230-500 (3)	0	OVLADACI PANEL / CONTROL PANEL / BEDIENPULT		1
2	201.R302-050	2	SLOUP / POLE / SÄULE		1
3	201.R302-060 (1)	0	SLOUP / POLE / SÄULE		1
4	201.R303-000	4	SVERAK / VICE / SCHRAUBSTOCK		1
5	201.Y307-010	4	VALEC ZVEDACI / LIFTING CYLINDER / HEBEZYLINDER		1
6	221.R301-700	2	PODSTAVEC / BASE / UNTERSATZ		1
7	221.R302-730	0	ODMEROVANI / POLE / SÄULE		1
8	221.R304-700	5	RAMENO / SAW ARM / SÄGERAHMEN		1
9	30.R399-701	2	STITEK TYPOVY / MACHINE LABEL / MASCHINE SCHILD	P 0.5x65	1
10	92.001.077	0	AGREGAT HYDRAULICKY / HYDRAULIC GENERATOR / HYDRAULIKAGGREGAT		1
11	99.900.039	0	SAMOLEPKA / STICKER / AUFKLEBER	NEBEZP.STLACENI	1
12	99.900.040	0	SAMOLEPKA / STICKER / AUFKLEBER		2
13	99.900.047	0	SAMOLEPKA / STICKER / AUFKLEBER		1
14	99.900.048	0	SAMOLEPKA / STICKER / AUFKLEBER		1
15	99.900.049	0	SAMOLEPKA / STICKER / AUFKLEBER		1
16	99.900.053	0	SAMOLEPKA / STICKER / AUFKLEBER		1
17	99.900.068	0	SAMOLEPKA / STICKER / AUFKLEBER	pouziti vysokozvizneno vozikku	4
18	99.901.044	2	SAMOLEPKA / STICKER / AUFKLEBER		1

1.ZRUSEN SLOUP 201.R302-020 A NAHR.201.R302-060. 229/ZM249 15.10.2013 SLEZACKOVA

2.ZRUSEN OVLADACI PANEL 221.M230-700 A NAHR.221.M230-800169/ZM247 8.12.2014 SLEZACKOVA

3.ZRUSEN OVLADACI PANEL 201.M230-800 A NAHR.201.R230-500. 093/ZM061 7.4.2015 SLEZACKOVA

Cislo Sestavy/Number of assembly/Nummer der Baugruppe; Verze (Ver.)/Version/Version; Nazev sestavy/Assembly title/Name der Baugruppe; Pozice (Poz.)/Position/Position;
Objednaci cislo/Purchase order number/Bestellnummer; Nazev polozky/Volume title/Name der Position; Rozmer/Stock size/Abmessung

7.2. 201.R300-800
PROLINE 420.350 Hsx

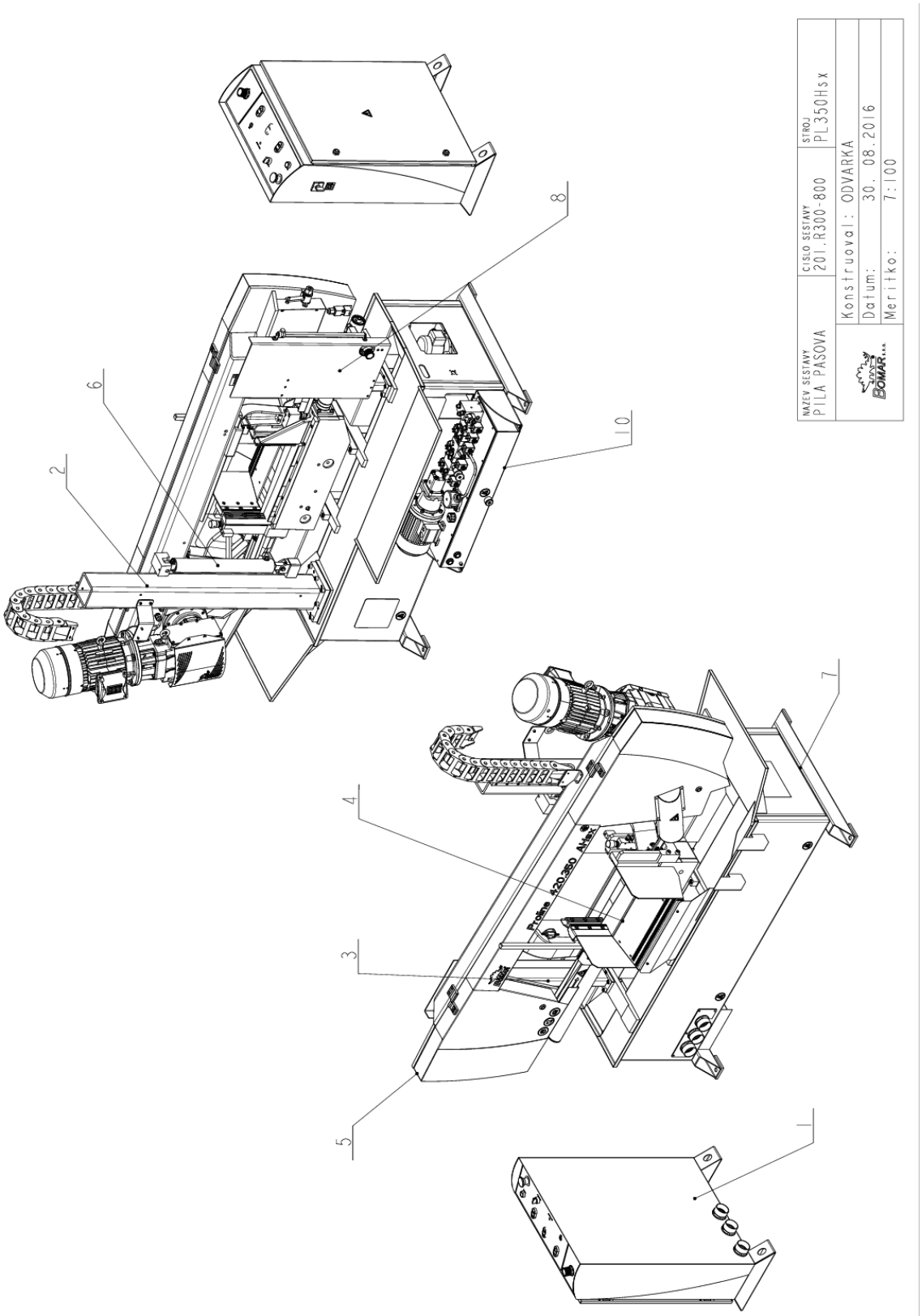

7.2.1. 201.R300-800
Kusovník / Piece list / Stückliste - PROLINE 420.350 H

Cislo Sestavy	Ver.	Nazev sestavy
201.R300-800	0	PILA PASOVA/BAND SAW/BANDSÄGE

Poz.	Objednaci cislo	Ver.	Nazev polozky	Rozmer	Ks
1	201.R230-500	0	OVLADACI PANEL / CONTROL PANEL / BEDIENPULT		1
2	201.R302-050	2	SLOUP / POLE / SÄULE		1
3	201.R302-060	0	SLOUP / POLE / SÄULE		1
4	201.R303-000	4	SVERAK / VICE / SCHRAUBSTOCK		1
5	201.R304-800	0	RAMENO / SAW ARM / SÄGERAHMEN		1
6	201.Y307-010	4	VALEC ZVEDACI / LIFTING CYLINDER / HEBEZYLINDER		1
7	221.R301-700	3	PODSTAVEC / BASE / UNTERSATZ		1
8	221.R302-730	0	ODMEROVANI / POLE / SÄULE		1
9	30.R399-801	0	STITEK TYPOVY / MACHINE LABEL / MASCHINE SCHILD	P 0.5x65	1
10	92.001.077	0	AGREGAT HYDRAULICKY / HYDRAULIC GENERATOR / HYDRAULIKAGGREGAT		1
11	99.900.039	0	SAMOLEPKA / STICKER / AUFKLEBER	NEBEZP.STLACENI	1
12	99.900.040	0	SAMOLEPKA / STICKER / AUFKLEBER		2
13	99.900.047	0	SAMOLEPKA / STICKER / AUFKLEBER		1
14	99.900.048	0	SAMOLEPKA / STICKER / AUFKLEBER		1
15	99.900.049	0	SAMOLEPKA / STICKER / AUFKLEBER		1
16	99.900.053	0	SAMOLEPKA / STICKER / AUFKLEBER		1
17	99.900.068	0	SAMOLEPKA / STICKER / AUFKLEBER	pouziti vysokozvizneno vozikku	4
18	99.901.032	0	SAMOLEPKA / STICKER / AUFKLEBER	CETIFIKACNI SAMOLEPKA	1
19	99.901.044	2	SAMOLEPKA / STICKER / AUFKLEBER		1

Cislo Sestavy/Number of assembly/Nummer der Baugruppe; Verze (Ver.)/Version/Version; Nazev sestavy/Assembly title/Name der Baugruppe; Pozice (Poz.)/Position/Position; Objednaci cislo/Purchase order number/Bestellnummer; Nazev polozky/Volume title/Name der Position; Rozmer/Stock size/Abmessung

7.2.2. 201.R300-800
PROLINE 420.350 H

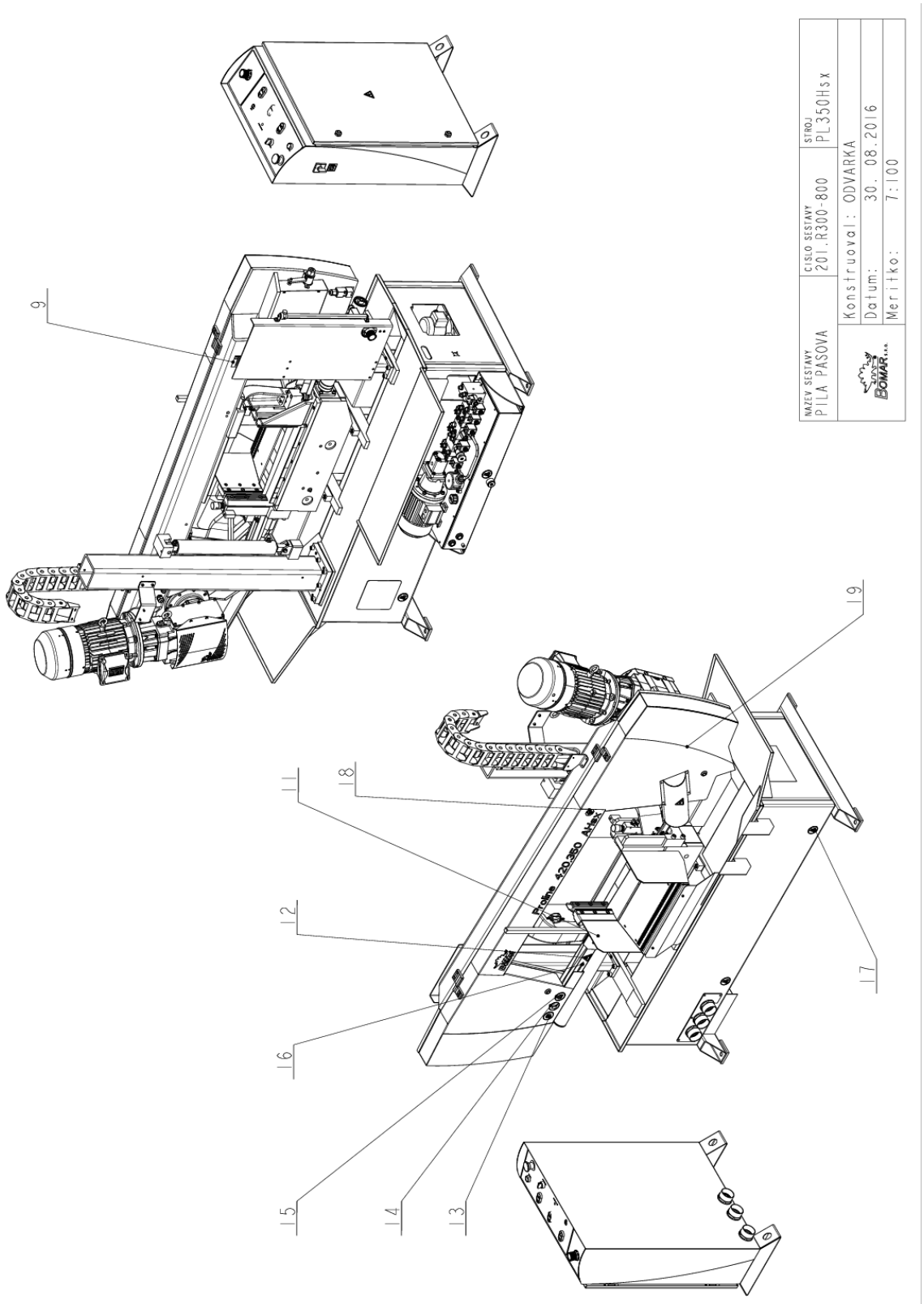

7.2.3. 201.R300-800
Kusovník / Piece list / Stückliste - PROLINE 420.350 H

Cislo Sestavy	Ver.	Nazev sestavy
201.R300-800	0	PILA PASOVA/BAND SAW/BANDSÄGE

Poz.	Objednaci cislo	Ver.	Nazev polozky	Rozmer	Ks
1	201.R230-500	0	OVLADACI PANEL / CONTROL PANEL / BEDIENPULT		1
2	201.R302-050	2	SLOUP / POLE / SÄULE		1
3	201.R302-060	0	SLOUP / POLE / SÄULE		1
4	201.R303-000	4	SVERAK / VICE / SCHRAUBSTOCK		1
5	201.R304-800	0	RAMENO / SAW ARM / SÄGERAHMEN		1
6	201.Y307-010	4	VALEC ZVEDACI / LIFTING CYLINDER / HEBEZYLINDER		1
7	221.R301-700	3	PODSTAVEC / BASE / UNTERSATZ		1
8	221.R302-730	0	ODMEROVANI / POLE / SÄULE		1
9	30.R399-801	0	STITEK TYPOVY / MACHINE LABEL / MASCHINE SCHILD	P 0.5x65	1
10	92.001.077	0	AGREGAT HYDRAULICKY / HYDRAULIC GENERATOR / HYDRAULIKAGGREGAT		1
11	99.900.039	0	SAMOLEPKA / STICKER / AUFKLEBER	NEBEZP.STLACENI	1
12	99.900.040	0	SAMOLEPKA / STICKER / AUFKLEBER		2
13	99.900.047	0	SAMOLEPKA / STICKER / AUFKLEBER		1
14	99.900.048	0	SAMOLEPKA / STICKER / AUFKLEBER		1
15	99.900.049	0	SAMOLEPKA / STICKER / AUFKLEBER		1
16	99.900.053	0	SAMOLEPKA / STICKER / AUFKLEBER		1
17	99.900.068	0	SAMOLEPKA / STICKER / AUFKLEBER	pouziti vysokozvizneno vozikku	4
18	99.901.032	0	SAMOLEPKA / STICKER / AUFKLEBER	CETIFIKACNI SAMOLEPKA	1
19	99.901.044	2	SAMOLEPKA / STICKER / AUFKLEBER		1

Cislo Sestavy/Number of assembly/Nummer der Baugruppe; Verze (Ver.)/Version/Version; Nazev sestavy/Assembly title/Name der Baugruppe; Pozice (Poz.)/Position/Position; Objednaci cislo/Purchase order number/Bestellnummer; Nazev polozky/Volume title/Name der Position; Rozmer/Stock size/Abmessung

7.3. 201.R230-500
Ovladací panel / Control panel / Bedienpult

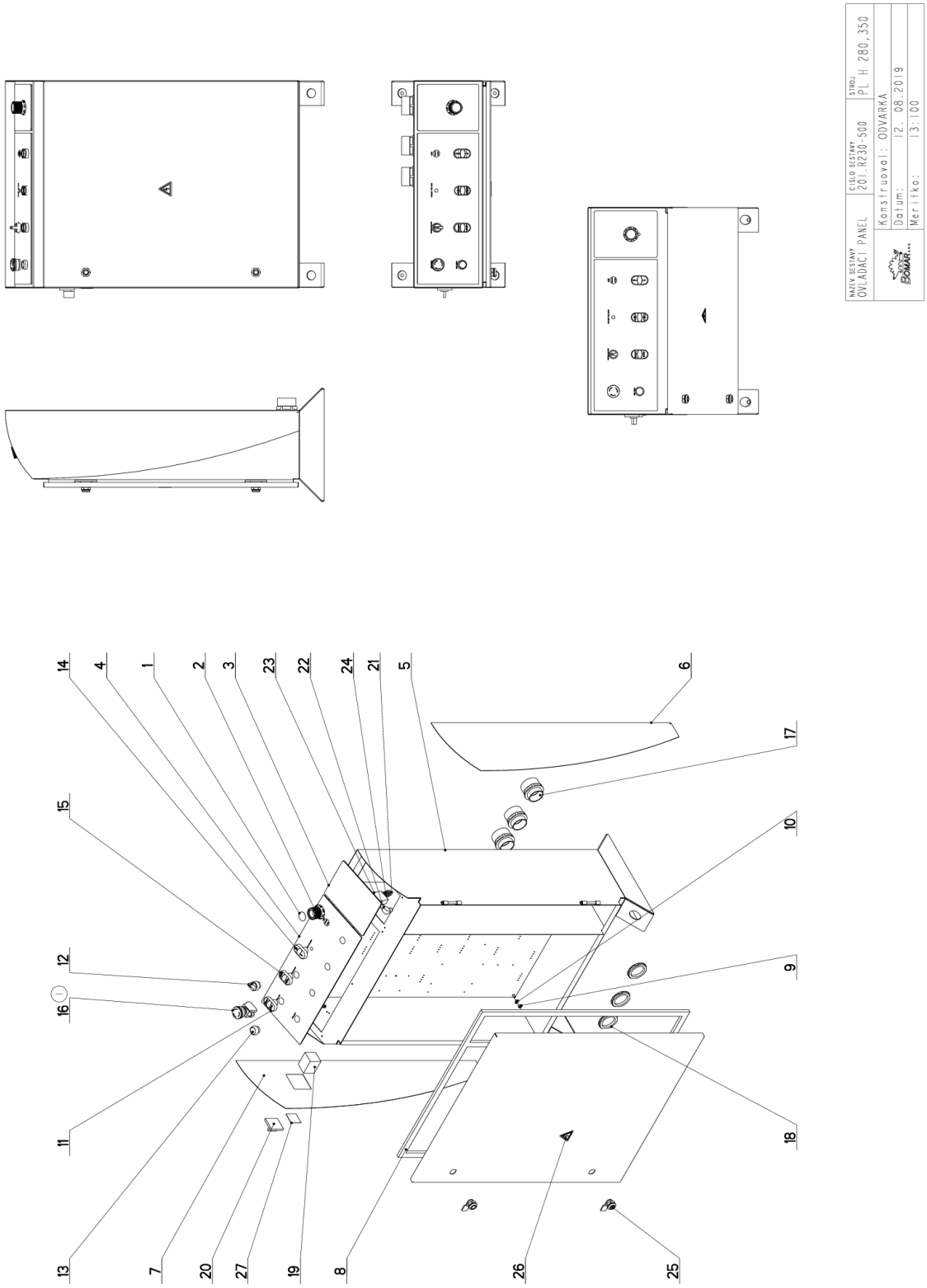

7.3.1. 201.R230-500
Kusovník / Piece list / Stückliste - Ovladací panel / Control panel / Bedienpult

Cislo Sestavy	Ver.	Nazev sestavy
201.R230-500	1	OVLADACI PANEL/CONTROL PANEL/BEDIENPULT

Poz.	Objednaci cislo	Ver.	Nazev polozky	Rozmer	Ks
1	30.6130-012	0	VIKO / COVER / DECKEL	P 0,5x30	1
2	30.6130-018	0	HLAVICE / HEAD / KOPF	VYLISEK	1
3	251.653	0	PANEL / PANEL / PANEL		1
4	251.863	0	PANEL ELEKTRO / ELECTRO PANEL / PANEL		1
5	30.R230-201	4	SKRIN / BOX / KASTEN		1
6	30.R230-204	1	PLECH / PLATE / BLECH	P 1x220	1
7	30.R230-206	2	PLECH / PLATE / BLECH	P 1x220	1
8	61.352.001	0	TESNENI / SEALING / DICHTUNG	TESNENI 19x10	1
9	90.100.55.004	0	MATICE / NUT / MUTTER	MATICE _ M6	4
10	90.150.50.004	0	PODLOZKA / WASHER / UNTERLEGSCHEIBE	PODLOZKA 6,4	4
11	91.060.034	0	HLAVICE / HEAD / KOPF	START/STOP	1
12	91.060.051	0	PREPINAC / SWITCH / UMSCHALTER		1
13	91.060.053	0	HLAVICE / HEAD / KOPF		1
14	91.060.054	0	HLAVICE / HEAD / KOPF	NAHORU/DOLU	1
15	91.060.055	0	HLAVICE / HEAD / KOPF	SV. ZAVR/OTEV	1
16	91.060.084 (1)	0	HLAVICE TOTAL STOP / TOTAL STOP HEAD / TASTE TOTAL STOP		1
17	91.071.022	0	VYVODKA / BUSHING / TÜLLE		3
18	91.072.016	0	MATICE / NUT / MUTTER		3
19	91.170.003	0	SPINAC VACKOVY / CAM SWITCH / SCHALTER	LE2-12-1763	1
20	91.180.001	0	DESKA SPINACE / ELECTRIC BOARD / PLATINE		1
21	92.002.103	0	SROUBENI PRIME / DIRECT BOLTING / GERADE VERSCHRAUBUNG	G 1/4" tr12	1
22	92.004.001	0	SROUBENI UHLOVE / ANGLE BOLTING / WINKELVERSCHRAUBUNG	37701	1
23	92.152.001	0	VENTIL SKRTICI / CHOKE VALVE / DROSSELVENTIL	VS01-04/R 2,5-0	1
24	96.082.002	0	TESNENI / SEAL RING / DICHTUNGSRING	13/17x1,5 CU	1
25	99.104.002	0	ZAMEK / LOCK / SCHLOSS	ZAMEK CINSKY	2
26	99.900.045	0	SAMOLEPKA / STICKER / AUFKLEBER		1
27	99.900.046	0	SAMOLEPKA / STICKER / AUFKLEBER		1

1.ZRUSENO 91.060.030 A NAHRAZENO 91.060.084. 235/ZM329 12.08.2019 KOSYK

Cislo Sestavy/Number of assembly/Nummer der Baugruppe; Verze (Ver.)/Version/Version; Nazev sestavy/Assembly title/Name der Baugruppe; Pozice (Poz.)/Position/Position; Objednaci cislo/Purchase order number/Bestellnummer; Nazev polozky/Volume title/Name der Position; Rozmer/Stock size/Abmessung

7.4. 201.R302-050
Sloup / Pole / Säule

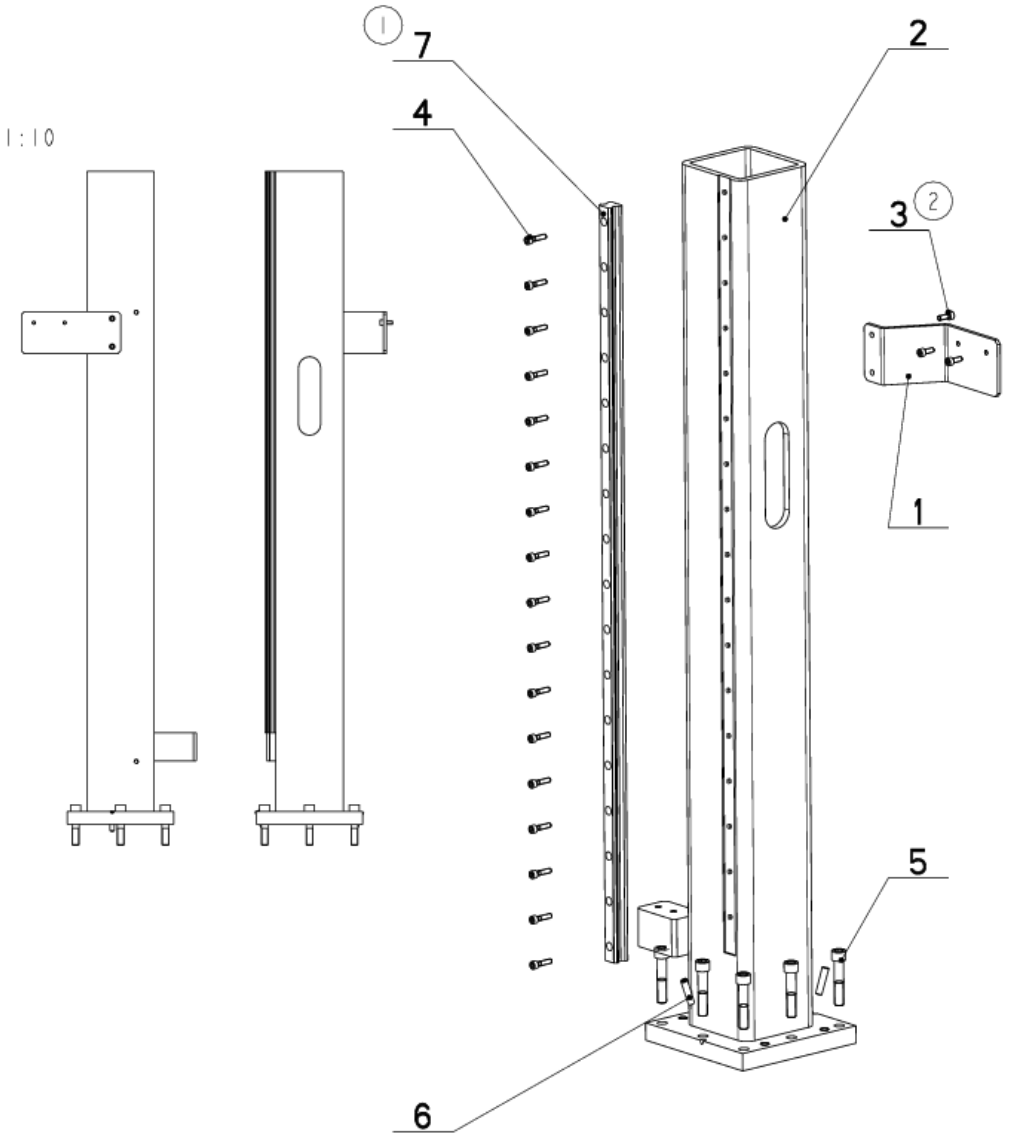

NAZEV SESTAVY	CISLO SESTAVY	STROJ
SLOUP	201.R302-050	PL 350
BOMAR	Konstruoval: ODVARKA	
	Datum: 23. 01.2015	
	Meritko: 7:50	

7.4.1. 201.R302-050
Kusovník / Piece list / Stückliste - Sloup / Pole / Säule

Cislo Sestavy	Ver.	Nazev sestavy
201.R302-050	2	SLOUP/POLE/SÄULE

Poz.	Objednaci cislo	Ver.	Nazev polozky	Rozmer	Ks
1	30.R202-013	0	DRZAK / HOLDER / HALTER	P 5x75	1
2	30.R302-051	1	SLOUP / POLE / SÄULE		1
3	90.001.25.017 (2)	0	SROUB IMBUS / ALLEN HEAD BOLT / IMBUSSCHRAUBE	M6X16	4
4	90.001.25.019	0	SROUB IMBUS / ALLEN HEAD BOLT / IMBUSSCHRAUBE	M6X25	17
5	90.001.25.063	0	SROUB IMBUS / ALLEN HEAD BOLT / IMBUSSCHRAUBE	M12X60	8
6	90.302.02.003	0	KUZEL. KOLIK S ZAV. / TAPER PIN + THREAD / KEGELBOLZEN + GEWINDE	KOLIK 8X36	2
7	99.200.296 (1)	0	VEDENI LINEARNI / LINEAR GUIDE / LINEARE FUHRUNG	MSA 25R 1000 20/20N	1

1.ZRUS.LIN.VEDENI 99.200.204 A NAHR.99.200.296 . 22.3.2012 SLEZACKOVA
2.PRIDAN 4xSROUB M6x16(90.001.25.017). 236/ZM010 23.1.2015 SLEZACKOVA

Cislo Sestavy/Number of assembly/Nummer der Baugruppe; Verze (Ver.)/Version/Version; Nazev sestavy/Assembly title/Name der Baugruppe; Pozice (Poz.)/Position/Position;
Objednaci cislo/Purchase order number/Bestellnummer; Nazev polozky/Volume title/Name der Position; Rozmer/Stock size/Abmessung

7.5. 201.R302-060
Sloup / Pole / Säule

Cislo Sestavy 201.R302-060	Ver. 0	Nazev sestavy SLOUP/POLE/SÄULE

Poz.	Objednaci cislo	Ver.	Nazev polozky	Rozmer	Ks
1	30.R302-061	0	SLOUP / POLE / SÄULE		1
2	90.001.25.057	0	SROUB IMBUS / ALLEN HEAD BOLT / IMBUSSCHRAUBE	M12x25	4
3	90.302.02.003	0	KUZEL. KOLIK S ZAV. / TAPER PIN + THREAD / KEGELBOLZEN + GEWINDE	KOLIK 8X36	2
4	99.200.274	0	VEDENI LINEARNI / LINEAR GUIDE / LINEARE FUHRUNG	MSA20R 540 30//30N	1
5	90.001.25.009	0	SROUB IMBUS / ALLEN HEAD BOLT / IMBUSSCHRAUBE	M5X16	9

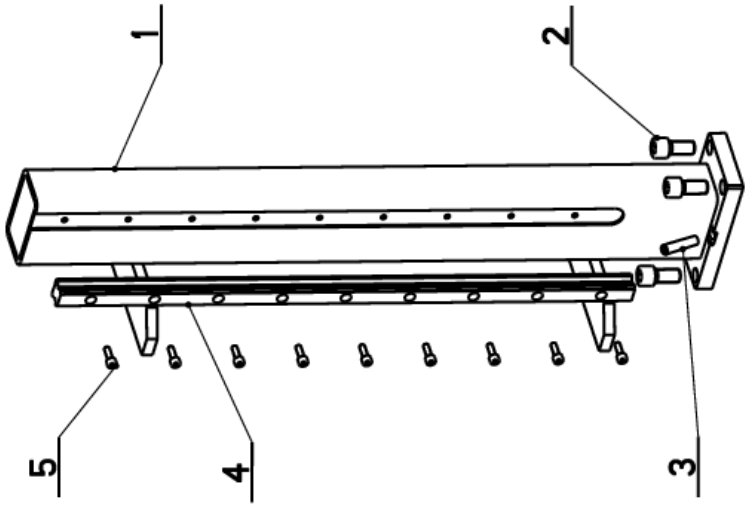

Cislo Sestavy/Number of assembly/Nummer der Baugruppe; Verze (Ver.)/Version/Version; Nazev sestavy/Assembly title/Name der Baugruppe; Pozice (Poz.)/Position/Position;
Objednaci cislo/Purchase order number/Bestellnummer; Nazev polozky/Volume title/Name der Position; Rozmer/Stock size/Abmessung

7.6. 201.R303-000
Svěrák / Vice / Schraubstock

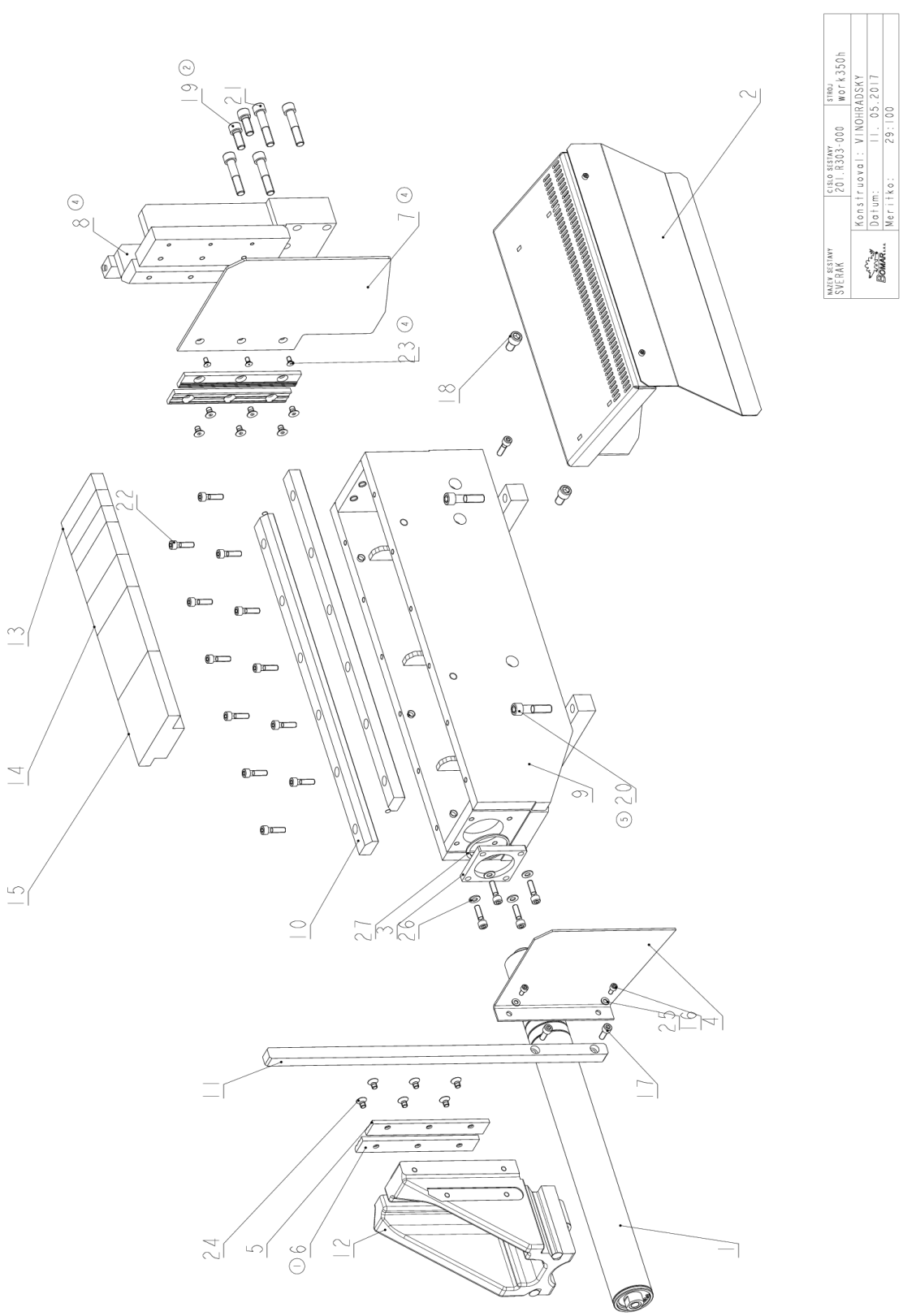

7.7. 201.R303-000
Kusovník / Piece list / Stückliste - Svěrák / Vice / Schraubstock

Cislo Sestavy	Ver.	Nazev sestavy
201.R303-000	5	SVERAK/VICE/SCHRAUBSTOCK

Poz.	Objednaci cislo	Ver.	Nazev polozky	Rozmer	Ks
1	201.3707-000	1	VALEC / ROLLER / ZYLINDER		1
2	201.R303-050	1	SKLUZ / SLIDE / RUTSCH		1
3	30.2011-010	0	PRILOZKA / STRAP / LASCHE	HR 80x10	1
4	30.5503-015	3	BOCNICE / SIDE PLATE / SEITENTEIL	P 3x230	1
5	30.6903-109	2	LISTA CELISTI / JAW TRIM / BACKENLEISTE	HR 30x10	2
6	30.D311-235 (1)	2	LISTA / TRIM / LEISTE	HR 30x10	2
7	30.R203-007 (4)	0	BOCNICE / SIDE PLATE / SEITENTEIL	P 4x237	1
8	30.R203-018 (4)	2	CELIST PEVNA / SOLID JAW / FESTE BACKE		1
9	30.R303-001	8	SVERAK / VICE / SCHRAUBSTOCK		1
10	30.R303-004	1	VEDENI / GUIDE / BACKENFÜHRUNG	HR 40x25	2
11	30.R303-005	1	LISTA / TRIM / LEISTE	HR 20x20	1
12	30.R303-014	2	CELIST POHYBLIVA / MOVING JAW / BEWEGLICHE BACKE	ODLITEK	1
13	30.R303-016	1	VLOZKA / INSERT / EINLAGE	HR 40x30	3
14	30.R303-017	1	VLOZKA / INSERT / EINLAGE	TYC 60x40	2
15	30.R303-018	1	VLOZKA / INSERT / EINLAGE	HR 120x40	2
16	90.001.25.016	0	SROUB IMBUS / ALLEN HEAD BOLT / IMBUSSCHRAUBE	M6X12	2
17	90.001.25.032	0	SROUB IMBUS / ALLEN HEAD BOLT / IMBUSSCHRAUBE	8x20	2
18	90.001.25.056	0	SROUB IMBUS / ALLEN HEAD BOLT / IMBUSSCHRAUBE	M12x20	2
19	90.001.25.058 (2)	0	SROUB IMBUS / ALLEN HEAD BOLT / IMBUSSCHRAUBE	M12X30	2
20	90.001.25.062 (5)	0	SROUB IMBUS / ALLEN HEAD BOLT / IMBUSSCHRAUBE	M12X50	4
21	90.001.25.063	0	SROUB IMBUS / ALLEN HEAD BOLT / IMBUSSCHRAUBE	M12X60	4
22	90.001.25.083	0	SROUB IMBUS / ALLEN HEAD BOLT / IMBUSSCHRAUBE	M8X30	17
23	90.011.27.005 (4)	0	ZAPUSTNY IMBUS / COUNTERSINK BOLT / SENKSCHRAUBE	SROUB M6X12	3
24	90.011.27.007	0	SROUB / BOLT / SCHRAUBE	M8x12	12
25	90.150.50.004	0	PODLOZKA / WASHER / UNTERLEGSCHEIBE	PODLOZKA 6,4	2
26	90.150.50.005	0	PODLOZKA / WASHER / UNTERLEGSCHEIBE	PODLOZKA 8,4	4
27	95.800.021	0	SEGR HRIDEL. / SAFETY RING / SICHERUNGSRING	POJISTNY KROUZEK 62	1

1. ZRUS.LISTA 30.6903-110 A NAHR.30.D311-325,ZRUS.CELIST 30.R203-012 A NAHR.30.R203-015,ZRUS.CELIST 30.R203-002 A NAHR.30.R203-016, ZRUS.6xSROUB M12x35(90.001.25.059) A NAHR.4xSROUB M12x70(90.001.25.064) A 2xSROUB M12x30(90.001.25.058). 112/ZM129 30.5.2011 SLEZACKOVA
2. ZRUS.CELIST 30.R203-015,30.R203-016 A NAHR.30.R203-017,ZRUS.4xSROUB M12x70 (90.001.25.064) A NAHR.2xSROUB M12x30 (90.001.25.058). 196/ZM003 10.1.2013 SLEZACKOVA
3. ZRUS.CELIST 30.R203-017 A NAHR.30.R203-018. 192/ZM226 30.10.2014 SLEZACKOVA
4. ZRUS.CELIST 30.R203-017 A NAHR.30.R203-018,ZRUS.BOCNICE 30.R303-015 A NAHR.30.R203-007,ZRUS.2xSROUB M6x16(90.001.25.017) A NAHR.2xSROUB M6x12(90.011.27.005). 192/ZM242 8.12.2014 SLEZACKOVA
5. ZRUS.SROUB M12x35(90.001.059) A NAHR.M12x50(90.001.25.062). 107/ZM169 11.5.2017 SLEZACKOVA

Cislo Sestavy/Number of assembly/Nummer der Baugruppe; Verze (Ver.)/Version/Version; Nazev sestavy/Assembly title/Name der Baugruppe; Pozice (Poz.)/Position/Position; Objednaci cislo/Purchase order number/Bestellnummer; Nazev polozky/Volume title/Name der Position; Rozmer/Stock size/Abmessung

7.8. 201.3707-000
Válec / Roller / Zylinder

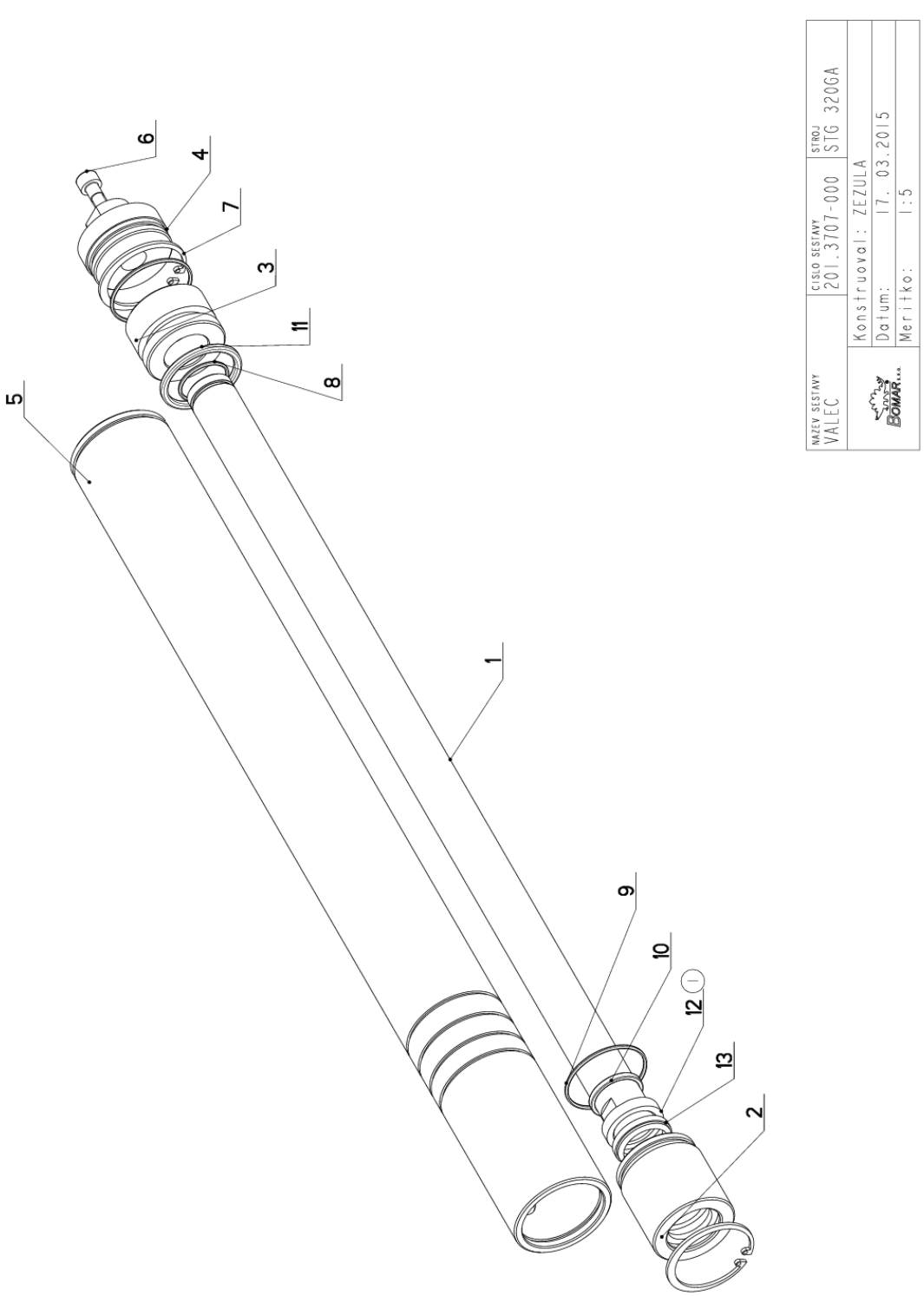

7.8.1. 201.3707-000
Kusovník / Piece list / Stückliste - Válec / Roller / Zylinder

Cislo Sestavy	Ver.	Nazev sestavy
201.3707-000	1	VALEC/ROLLER/ZYLINDER

Poz.	Objednaci cislo	Ver.	Nazev polozky	Rozmer	Ks
1	30.0607-102	1	PISTNICE / PISTON ROD / KOLBENSTANGE	d 28	1
2	30.1807-104	2	VIKO / COVER / DECKEL	TYC 55	1
3	30.2007-302	0	PIST / PISTON / KOLBEN	d 55	1
4	30.2007-304	1	VIKO / COVER / DECKEL	d 55	1
5	30.3707-001	3	VALEC SVERAKU / VICE CYLINDER / SCHRAUBSTOCKZYLINDER	TR 62/50H8	1
6	90.001.25.083	0	SROUB IMBUS / ALLEN HEAD BOLT / IMBUSSCHRAUBE	M8X30	1
7	95.801.009	0	SEGR DIRA / INSIDE SAFETY RING / SICHERUNGSRING INNEN	POJISTNY KROUZEK 52	2
8	96.001.007	0	O-KROUZEK STATIC / STATIC O RING / O-RING STATISCH	25x2 NBR 70SH	1
9	96.001.013	0	O-KROUZEK STATIC / STATIC O RING / O-RING STATISCH	45X2	2
10	96.002.014	0	KROUZEK O DYNAMICKY / DYNAMIC O RING / O-RING DYNAMISCH	28X3	1
11	96.020.005 (1)	0	KROUZEK TESNICI / SEAL RING / DICHTUNGSRING	39.2X5.33	1
12	96.041.003	0	TESNENI / SEALING / DICHTUNG	601-28x36x7.1	1
13	96.060.003	0	KROUZEK STIRACI / SCRAPER RING / ABSTREIFRING	KROUZEK STIRACI 28	1

(1) O-KROUZEK 96.002.014 NAHRAZEN MANZETOU 96.041.003 24.4.2003 ROZKOSNY

Cislo Sestavy/Number of assembly/Nummer der Baugruppe; Verze (Ver.)/Version/Version; Nazev sestavy/Assembly title/Name der Baugruppe; Pozice (Poz.)/Position/Position; Objednaci cislo/Purchase order number/Bestellnummer; Nazev polozky/Volume title/Name der Position; Rozmer/Stock size/Abmessung

7.9. 201.R303-050
Skluz / Slide / Rutsch

Cislo Sestavy
201.R303-050

Ver.
1

Nazev sestavy
SKLUZ/SLIDE/RUTSCH

Poz.	Objednaci cislo	Ver.	Nazev polozky	Rozmer	Ks
1	30.R303-051	1	STUL / TABLE / TISCH		1
2	30.R303-052	0	SKLUZ / SLIDE / RUTSCH	P 1.5x260	1
3	30.3509-015	1	KROUZEK DISTANCNI / DISTANCE RING / DISTANZRING	TR 8x1	2
4	90.001.25.009 (1)	0	SROUB IMBUS / ALLEN HEAD BOLT / IMBUSSCHRAUBE	M5X16	2

1.ZRUS.SROUB M6x16 (90.001.25.017) A NAHR. M5x16 (90.001.25.009). 191/ZM204 19.8.2011 SLEZACKOVA

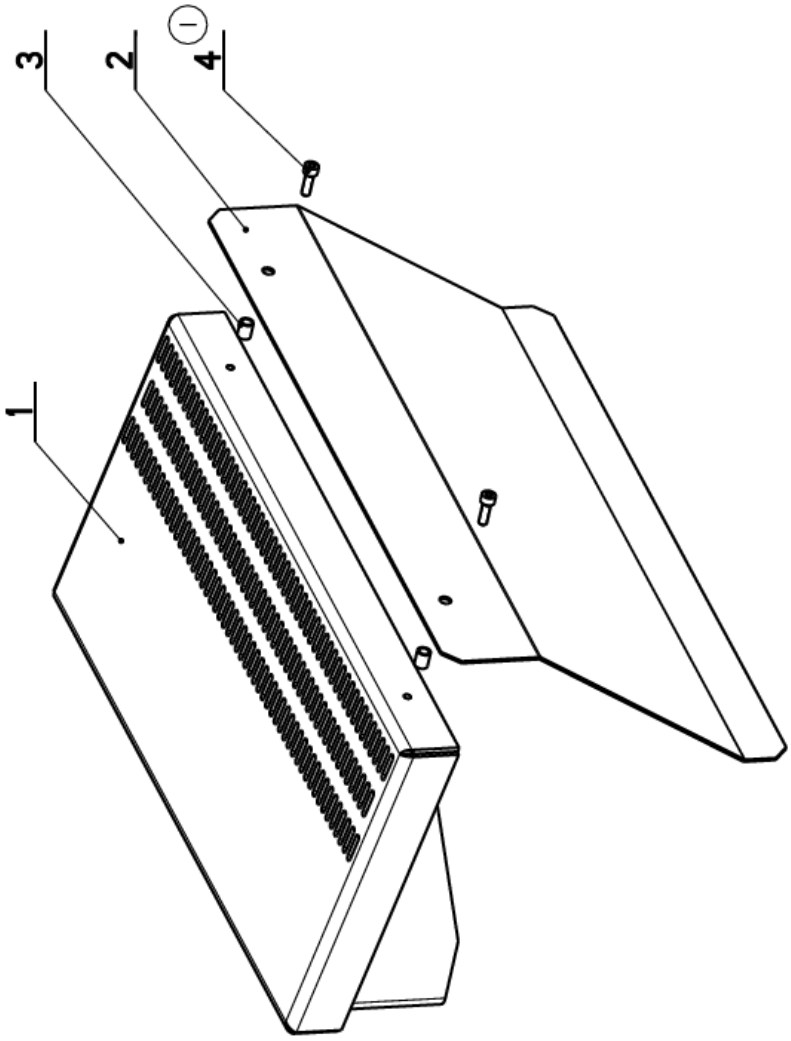

7.10. 201.Y307-010
Válec zvedací / Lifting cylinder / Hebezylinder

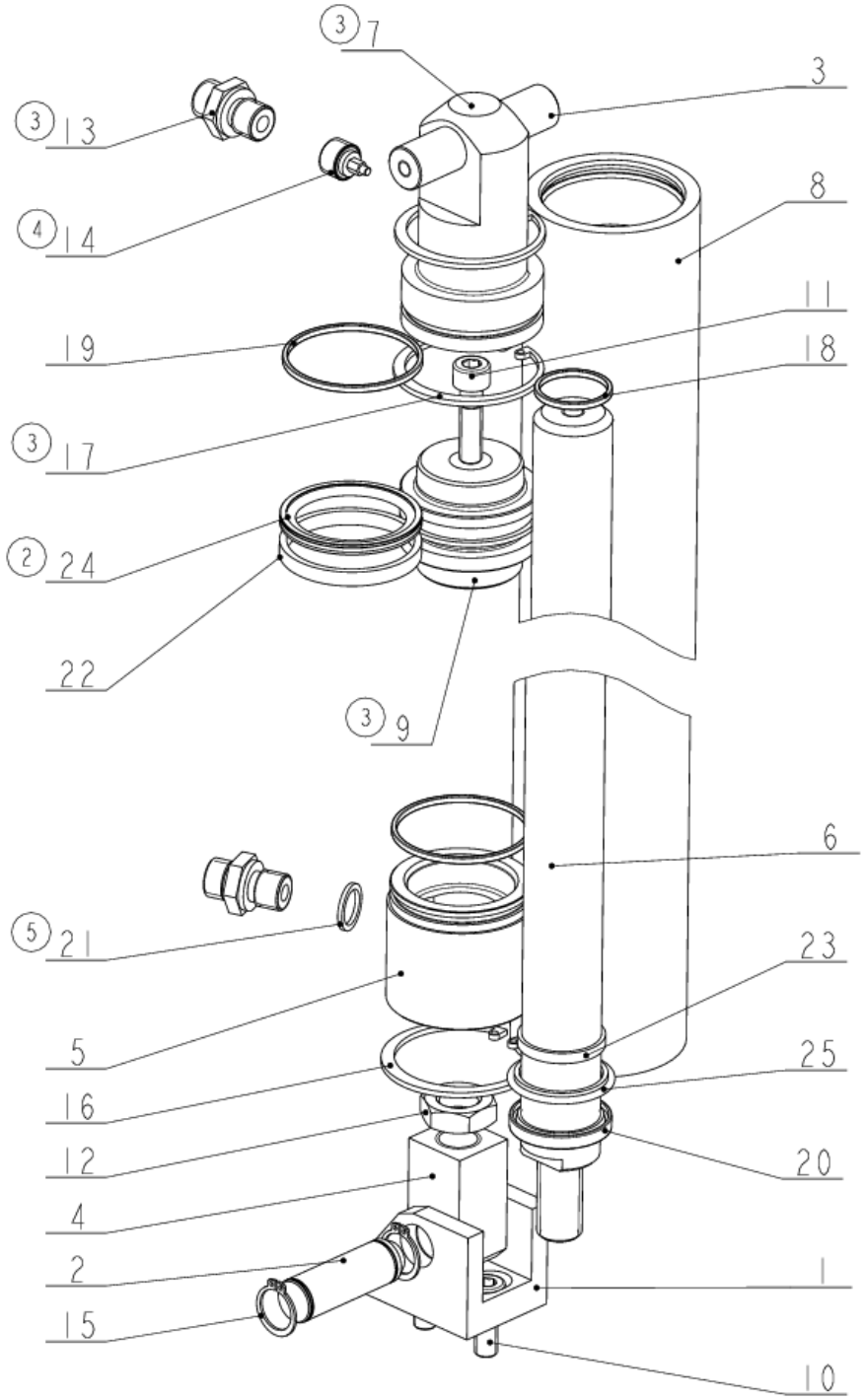

NAZEV SESTAVY	CISLO SESTAVY	STROJ
VALEC ZVEDACI	201.Y307-010	1360

Konstruoval:	MUSIL
Datum:	09. 03.2011
Meritko:	1:2

7.10.1. 201.Y307-010
Kusovník / Piece list / Stückliste - Válec zvedací / Lifting cylinder / Hebezylinder

Cislo Sestavy	Ver.	Nazev sestavy
201.Y307-010	5	VALEC ZVEDACI/LIFTING CYLINDER/HEBEZYLINDER

Poz.	Objednaci cislo	Ver.	Nazev polozky	Rozmer	Ks
1	30.0807-008	3	DRZAK / HOLDER / HALTER	HR 40x40	1
2	30.0807-009	2	CEP / LUG / BOLZEN	d 16h9	1
3	30.8307-205	0	CEP / LUG / BOLZEN	d 16h9	1
4	30.8607-001	1	DRZAK / HOLDER / HALTER	HR 25x25	1
5	30.C407-012	2	VIKO / COVER / DECKEL	d 55	1
6	30.Y307-002	0	PISTNICE / PISTON ROD / KOLBENSTANGE	d 28 f8	1
7	30.Y307-003 (3)	3	VIKO / COVER / DECKEL	d 55	1
8	30.Y307-011	5	VALEC ZVEDACI / LIFTING CYLINDER / HEBEZYLINDER	TR 62/50	1
9	30.Y307-012 (3)	1	PIST / PISTON / KOLBEN	d 55	1
10	90.001.25.032	0	SROUB IMBUS / ALLEN HEAD BOLT / IMBUSSCHRAUBE	8x20	2
11	90.001.55.083	0	SROUB IMBUS / ALLEN HEAD BOLT / IMBUSSCHRAUBE	M8X30	1
12	90.101.55.003	0	MATICE / NUT / MUTTER	MATICE M16	1
13	92.002.001 (3)	0	SROUBENI PRIME / DIRECT BOLTING / GERADE VERSCHRAUBUNG	GES 08LR	2
14	92.151.008 (4)	0	VENTIL POJISTNY / SAFETY VALVE / SICHERUNGSVENTIL	VPN-H 1/4"	1
15	95.800.007	0	SEGR HRIDEL. / OUTSIDE SAFETY RING / SICHERUNGSRING AUSSEN	POJISTNY KROUZEK 16	2
16	95.801.009	0	SEGR DIRA / INSIDE SAFETY RING / SICHERUNGSRING INNEN	POJISTNY KROUZEK 52	1
17	95.801.018 (3)	0	KROUZEK POJIST.VNITR / INSIDE SAFETY RING / SICHERUNGSRING INNEN	POJISTNY KROUZEK 50	2
18	96.002.011	0	KROUZEK O DYNAMICKY / DYNAMIC O RING / O-RING DYNAMISCH	24X2	1
19	96.002.019	0	KROUZEK O DYNAMICKY / DYNAMIC O RING / O-RING DYNAMISCH	46x2 NBR 70SH	2
20	96.061.009	0	KROUZEK STIRACI / SCRAPER RING / ABSTREIFRING	WD2200280 Z201	1
21	96.082.002 (5)	0	TESNENI / SEAL RING / DICHTUNGSRING	13/17x1.5 CU	1
22	96.084.001	0	KROUZEK VODICI / LEAD RING / FÜHRUNGSRING	GP6500500-T47	1
23	96.084.006	0	KROUZEK VODICI / LEAD RING / FÜHRUNGSRING	GR4300280-T47	1
24	96.900.013 (2)	0	TESNENI KOMBINOVANE / COMBINATION SEALING / KOMBIDICHTUNG	PT0200500	1
25	96.900.021	0	TESNENI KOMBINOVANE / COMBINATION SEALING / KOMBIDICHTUNG	RSK200280-46N	1

1.ZRUS.SROUBENI 92.002.005 A NAHR.92.003.001,ZRUS.SROUBENI 30.6107-510 A NAHR.30.9107-509.,ZRUS.1xTESNENI 96.082.002 (ZUSTAVAJI 2ks).071/ZM097 12.4.2010 SLEZACKOVA

2.ZRUSENO TESNENI 96.900.001 A NAHR.96.900.013. 336/ZM006 10.1.2011 SLEZACKOVA

3.ZRUS.REDUKCE 30.9107-509,ZRUS.SROUBENI 30.1807-005,ZRUS.VIKO 30.Y307-005 A NAHR.30.Y307-003,ZRUS.SROUBENI 92.003.001 A NAHR.92.002.001,ZRUS.PIST 30.LM07-504 A NAHR.30.Y307-012,ZRUS.KROUZEK 95.801.009 A NAHR.95.801.018. 026/ZM027 24.2.2011 SLEZACKOVA

4.VENTIL 92.151.001 PRECISLOVAN NA 92.151.008. 222/ZM211 29.7.2013 SLEZACKOVA

5.ZRUS. 2xTESNENI 96.082.002. 290/ZM003 8.1.2019 SZABARI

7.11. 221.R301-700
Podstavec / Base / Untersatz

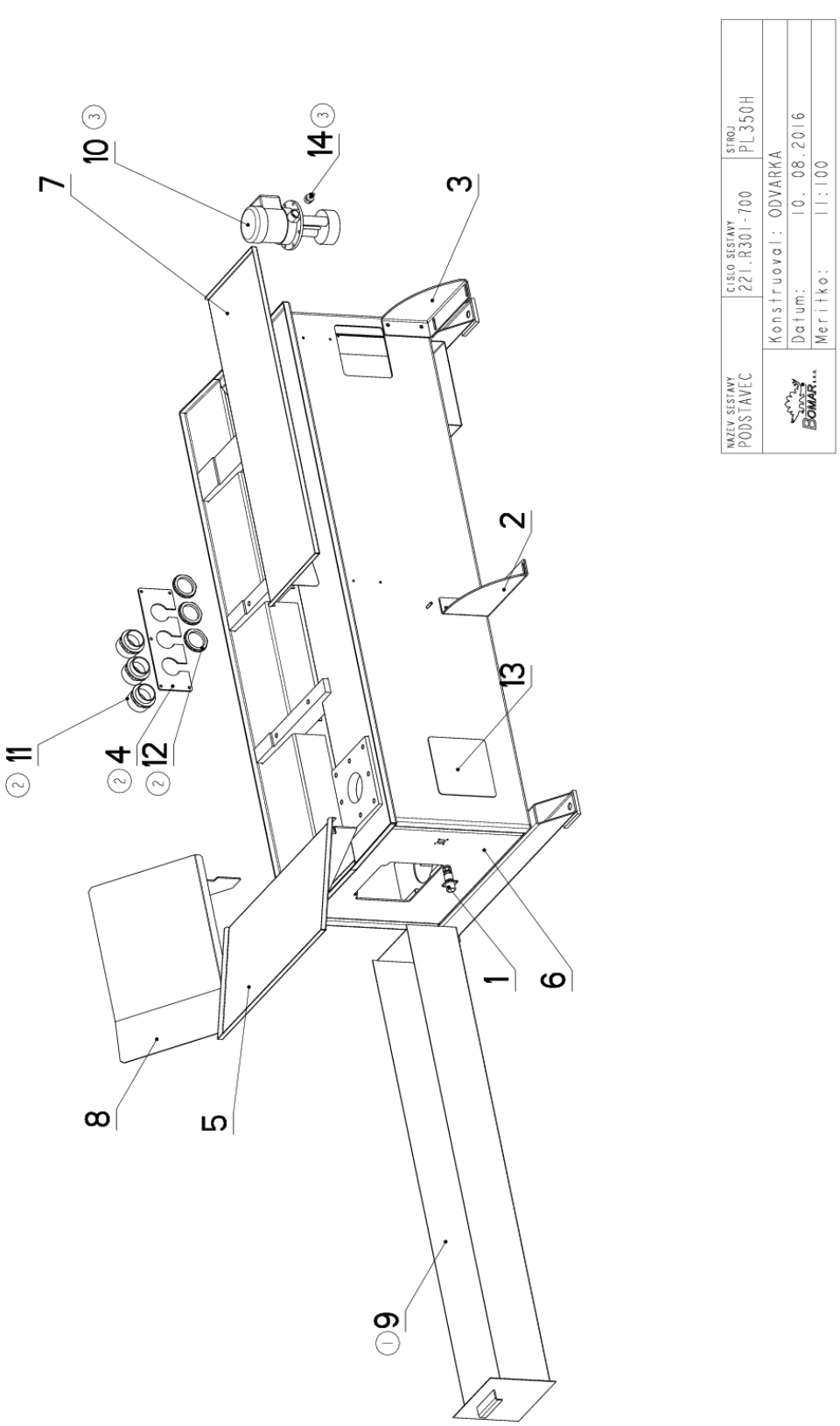

7.11.1. 221.R301-700

Kusovník / Piece list / Stückliste - Podstavec / Base / Untersatz

Cislo Sestavy	Ver.	Nazev sestavy
221.R301-700	3	PODSTAVEC/BASE/UNTERSATZ

Poz.	Objednaci cislo	Ver.	Nazev polozky	Rozmer	Ks
1	262.007	0	KONEKTOR / CONNECTOR / STECKVERBINDER		1
2	30.M201-005	2	DRZAK / HOLDER / HALTER	P 4x173	1
3	30.M201-006 (2)	2	DRZAK / HOLDER / HALTER	P 4x173	1
4	30.R201-056	1	VIKO / COVER / DECKEL	P 4x100	1
5	30.R301-053	1	KRYT / COVER / ABDECKUNG		1
6	30.R301-701	1	PODSTAVEC / BASE / UNTERSATZ		1
7	30.R301-703	1	KRYT / COVER / ABDECKUNG		1
8	30.R314-260	0	KRYT / COVER / ABDECKUNG		1
9	30.R401-006 (1)	0	VANA / TANK / WANNE		1
10	91.020.032 (3)	0	CERPADLO CHLAZENI / COOLING PUMP / KÜHLMITTELPUMPE	230/400V	1
11	91.071.022 (2)	0	VYVODKA / BUSHING / TÜLLE		3
12	91.072.016 (2)	0	MATICE / NUT / MUTTER		3
13	94.101.039	0	ZASLEPKA / PLUG / BLINDFLANSCH	154x154x4	1
14	94.202.020 (3)	0	REDUKCE / REDUCTION / ADAPTOR / REDUKTION	1/2"-6	1

1.ZRUSENA VANA 30.R206-001 A NAHR.30.R401-006. 108/ZM131 15.4.2013 SLEZACKOVA

2.ZRUS.KONZOLA 30.R301-704,30.R301-705 A NAHR.DRZAK 30.R201-056,PRID.VYVODKA 91.071.022,MATICE 91.072.016. 093/ZM061 3.4.2015 SLEZACKOVA

3.ZRUS.CERPADLO 91.020.015 A NAHR.91.020.032,PRID.REDUKCE 94.202.020. 001/ZM243 10.8.2016 SLEZACKOVA

Cislo Sestavy/Number of assembly/Nummer der Baugruppe; Verze (Ver.)/Version/Version; Nazev sestavy/Assembly title/Name der Baugruppe; Pozice (Poz.)/Position/Position; Objednaci cislo/Purchase order number/Bestellnummer; Nazev polozky/Volume title/Name der Position; Rozmer/Stock size/Abmessung

7.12. 201.R302-730
Odměřování / Pole / Säule

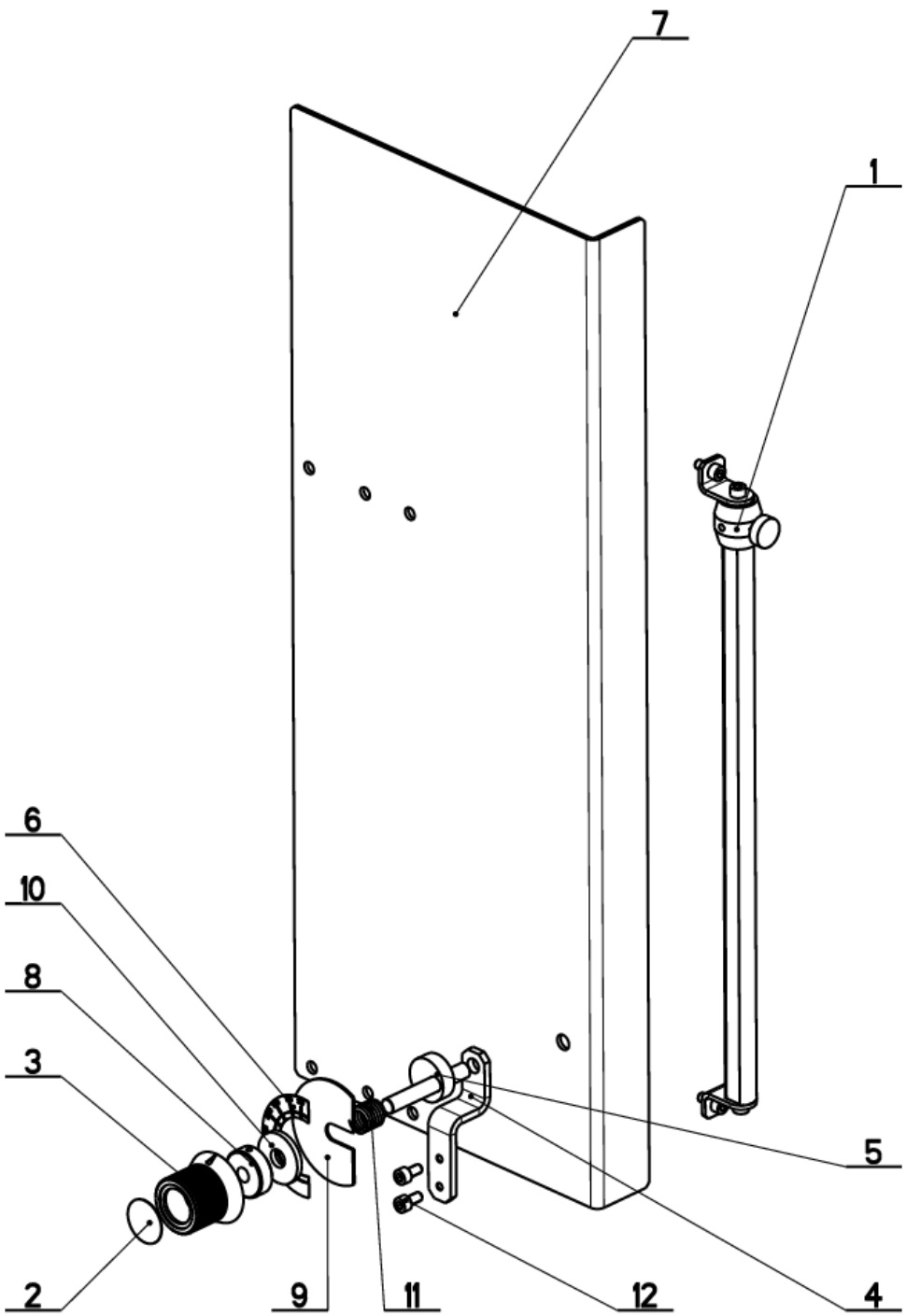

NAZEV SESTAVY	CISLO SESTAVY	STROJ
ODMEROVANI	221.R302-730	Prolin350H

Konstruoval:	KOLESA
Datum:	21. 08.2012
Meritko:	3:10

7.12.1. 201.R302-730

Kusovník / Piece list / Stückliste - Odměřování / Pole / Säule

Cislo Sestavy	Ver.	Nazev sestavy
221.R302-730	0	ODMEROVANI/POLE/SÄULE

Poz.	Objednaci cislo	Ver.	Nazev polozky	Rozmer	Ks
1	201.Y302-070	0	ODMEROVANI / MEASURING / GEHRUNGSMESSUNG	SESTAVA	1
2	30.6130-012	0	VIKO / COVER / DECKEL	P 0.5x 30x30	1
3	30.6130-020	0	OVLADANI / CONTROLS / STEUERUNG	VYLISEK	1
4	30.R202-031	0	DRZAK / HOLDER / HALTER	HR 20x5	1
5	30.R202-033	1	OSA / AXLE / ACHSE	SVARENO	1
6	30.R302-034	0	STUPNICE / SCALE / SKALA	P1x41	1
7	30.R314-701	0	DRZAK / HOLDER / HALTER	P 3x311	1
8	30.Y302-058	1	VLOZKA / INSERT / EINLAGE	d 32	1
9	30.Y302-153	0	PODLOZKA / WASHER / UNTERLEGSCHEIBE	P1,5-72	1
10	31.K107-006	1	GUMA / RUBBER / GUMMI	d35	1
11	31.T302-054	0	PRUZINA / SPRING / FEDER	d 2.24	1
12	90.001.25.016	0	SROUB IMBUS / ALLEN HEAD BOLT / IMBUSSCHRAUBE	M6X12	2

Cislo Sestavy/Number of assembly/Nummer der Baugruppe; Verze (Ver.)/Version/Version; Nazev sestavy/Assembly title/Name der Baugruppe; Pozice (Poz.)/Position/Position; Objednaci cislo/Purchase order number/Bestellnummer; Nazev polozky/Volume title/Name der Position; Rozmer/Stock size/Abmessung

7.13. 201.Y302-070
Odměřování / Measuring / Gehrung smessung

Cislo Sestavy
201.Y302-070

Ver.
0

Nazev sestavy
ODMEROVANI/MEASURING/GEHRUNGSMESSUNG

Poz.	Objednaci cislo	Ver.	Nazev polozky	Rozmer	Ks
1	30.6114-023	0	DRZAK / HOLDER / HALTER	P 3x20	2
2	30.Y302-071	0	TYC / POLE / STANGE	d 20	1
3	30.2014-001	0	KLUZAK / GLIDER / GLEITER		1
4	90.001.25.092	0	SROUB IMBUS / ALLEN HEAD BOLT / IMBUSSCHRAUBE	M6X14	4
5	94.007.001	0	SROUB / BOLT / SCHRAUBE	M5x10	1

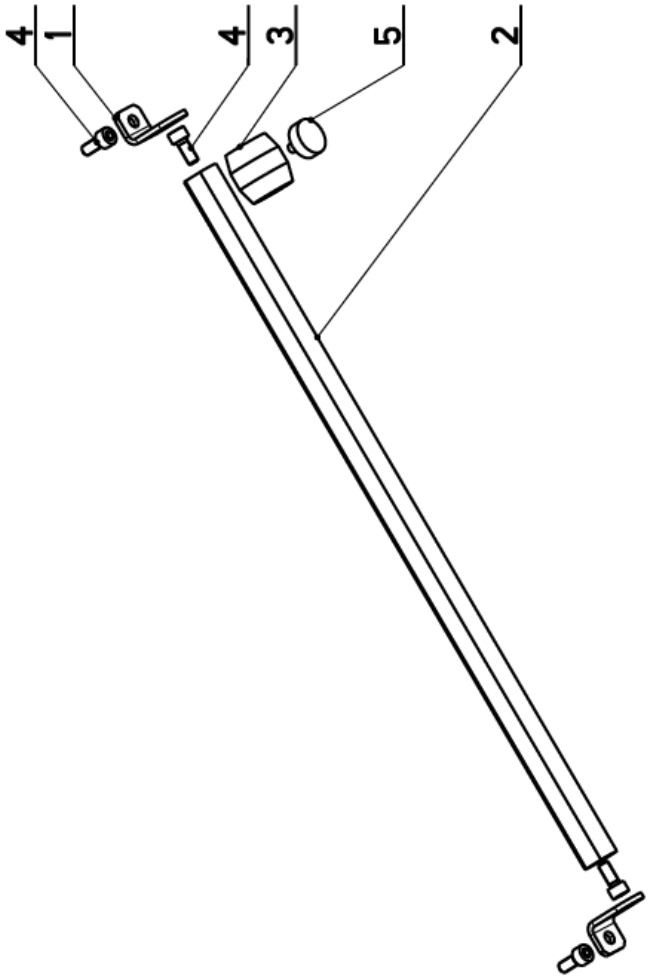

7.14. 201.R304-700
Rameno / Saw arm / Sägerahmen
Proline 420.350 H

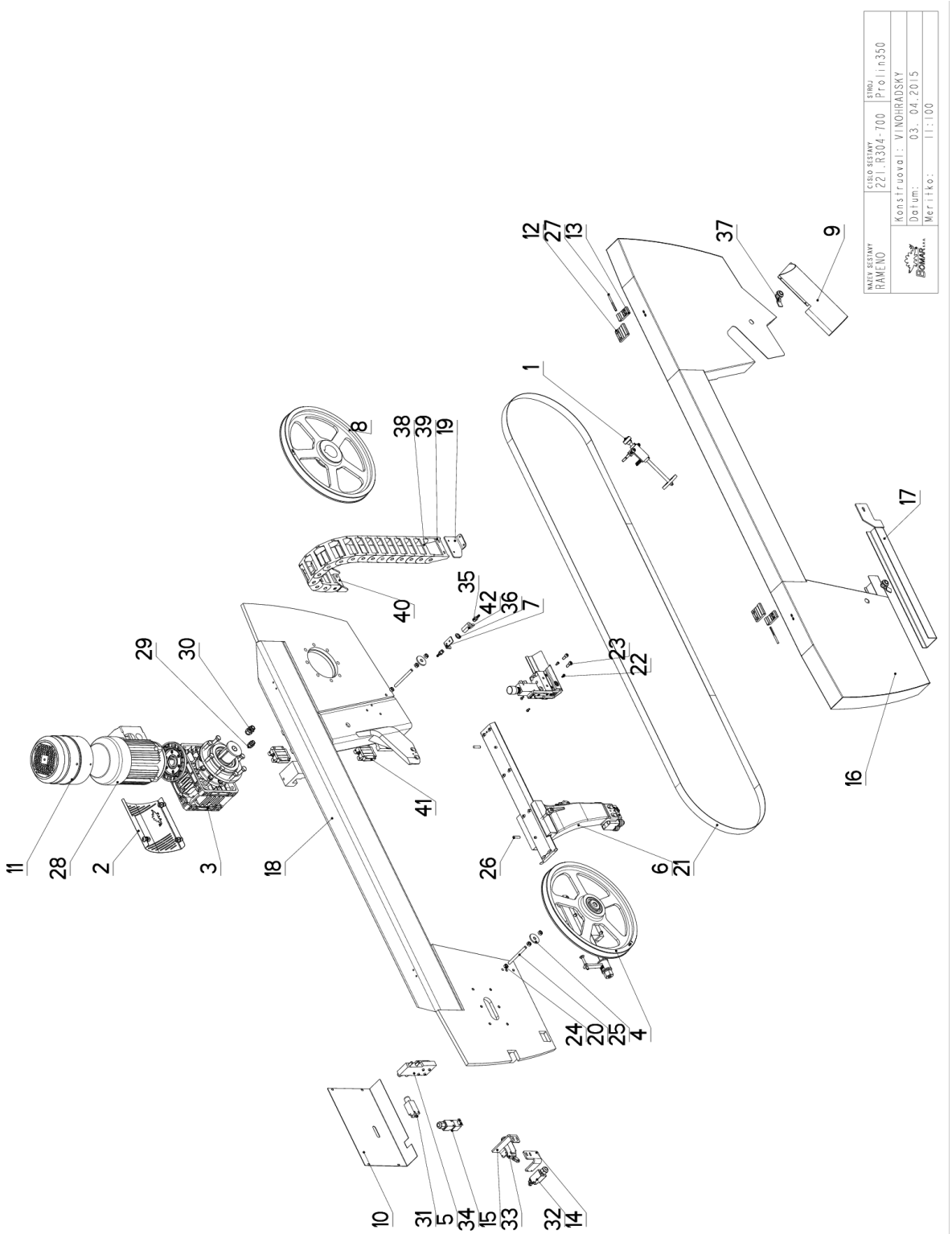

7.14.1. 201.R304-700
Kusovník / Piece list / Stückliste -
Rameno / Saw arm / Sägerahmen
Proline 420.350 H

Cislo Sestavy	Ver.	Nazev sestavy
221.R304-700	5	RAMENO/SAW ARM/SÄGERAHMEN

Poz.	Objednaci cislo	Ver.	Nazev polozky	Rozmer	Ks
1	201.M304-020	0	KARTAC / BRUSH / BÜRSTE		1
2	201.M304-022 (5)	0	KRYT / COVER / ABDECKUNG		1
3	201.M305-000	1	PREVODOVKA / TRANSMISSION / GETRIEBE		1
4	201.M308-100 (1)	0	NAPINANI / TENSIONING / SPANNUNG		1
5	201.R304-040 (2)	0	KONZOLA / CONSOLE / KONSOLE		1
6	201.R310-000	1	VEDENI PASU / BELT GUIDE / SÄGEBANDFÜHRUNG		1
7	30.1814-011	2	DRZAK / HOLDER / HALTER	P 3x76	1
8	30.2904-003	3	KOLO HNACI / DRIVE WHEEL / ANTRIEBSRAD	ODLITEK	1
9	30.M304-009	0	KRYT KARTACKU / BRUSH COVER / BÜRSTENABDECKUNG		1
10	30.M304-017	0	KRYT NAPINANI / TENSIONING COVER / BANDSPANNUNGSABDECKUNG	P 1.5x310	1
11	30.M304-070 (4)	0	VENTILATOR / VENTILATOR / VENTILATOR		1
12	30.R304-006	3	PANT / BOARD / PLATTE	PROFIL	2
13	30.R304-007	2	PANT / BOARD / PLATTE	PROFIL	2
14	30.R304-008	0	DRZAK / HOLDER / HALTER	P 6x80	1
15	30.R304-009	0	DRZAK / HOLDER / HALTER	P 6x74	1
16	30.R304-012 (3)	0	KRYT / COVER / ABDECKUNG		1
17	30.R304-016	1	KRYT PASU / BELT COVER / BANDABDECKUNG		1
18	30.R304-201	4	RAMENO / SAW ARM / SÄGERAHMEN		1
19	30.T304-014	0	DRZAK / HOLDER / HALTER	P 4x100	1
20	30.Y304-018	0	TYC ZAVITOVA / THREADED POLE / GEWINDESTANGE	M10	2
21	44.104.003	0	PAS PILOVY 330 / SAW BELT / SÄGEBAND	4780x32(4)x0.90	1
22	90.001.25.007	0	SROUB IMBUS / ALLEN HEAD BOLT / IMBUSSCHRAUBE	M5X10	4
23	90.001.25.032	0	SROUB IMBUS / ALLEN HEAD BOLT / IMBUSSCHRAUBE	8x20	2
24	90.100.55.006	0	MATICE / NUT / MUTTER	MATICE _ M10	6
25	90.151.50.002		PODLOZKA / WASHER / UNTERLEGSCHEIBE	PODLOZKA 12	2
26	90.302.0Z.003		KUZEL. KOLIK S ZAV. / TAPER PIN + THREAD / KEGELBOLZEN + GEWINDE	KOLIK 8X36	2
27	90.307.0Z.001	0	KOLIK / PIN / BOLZEN	D6	2
28	91.001.053	0	ELEKTROMOTOR / ELECTRIC MOTOR / ELEKTROMOTOR	MDERA 100-32pro	1
29	91.070.011	0	VYVODKA / BUSHING / TÜLLE	M16x1.5	1
30	91.070.012	0	VYVODKA / BUSHING / TÜLLE	M20x1.5	1
31	91.173.007	0	SPINAC KONCOVY / END SWITCH / ENDSCHALTER	-RIWK	1

Cislo Sestavy/Number of assembly/Nummer der Baugruppe; Verze (Ver.)/Version/Version; Nazev sestavy/Assembly title/Name der Baugruppe; Pozice (Poz.)/Position/Position;
Objednaci cislo/Purchase order number/Bestellnummer; Nazev polozky/Volume title/Name der Position; Rozmer/Stock size/Abmessung

7.14.2. 201.R304-700
Rameno / Saw arm / Sägerahmen
Proline 420.350 H

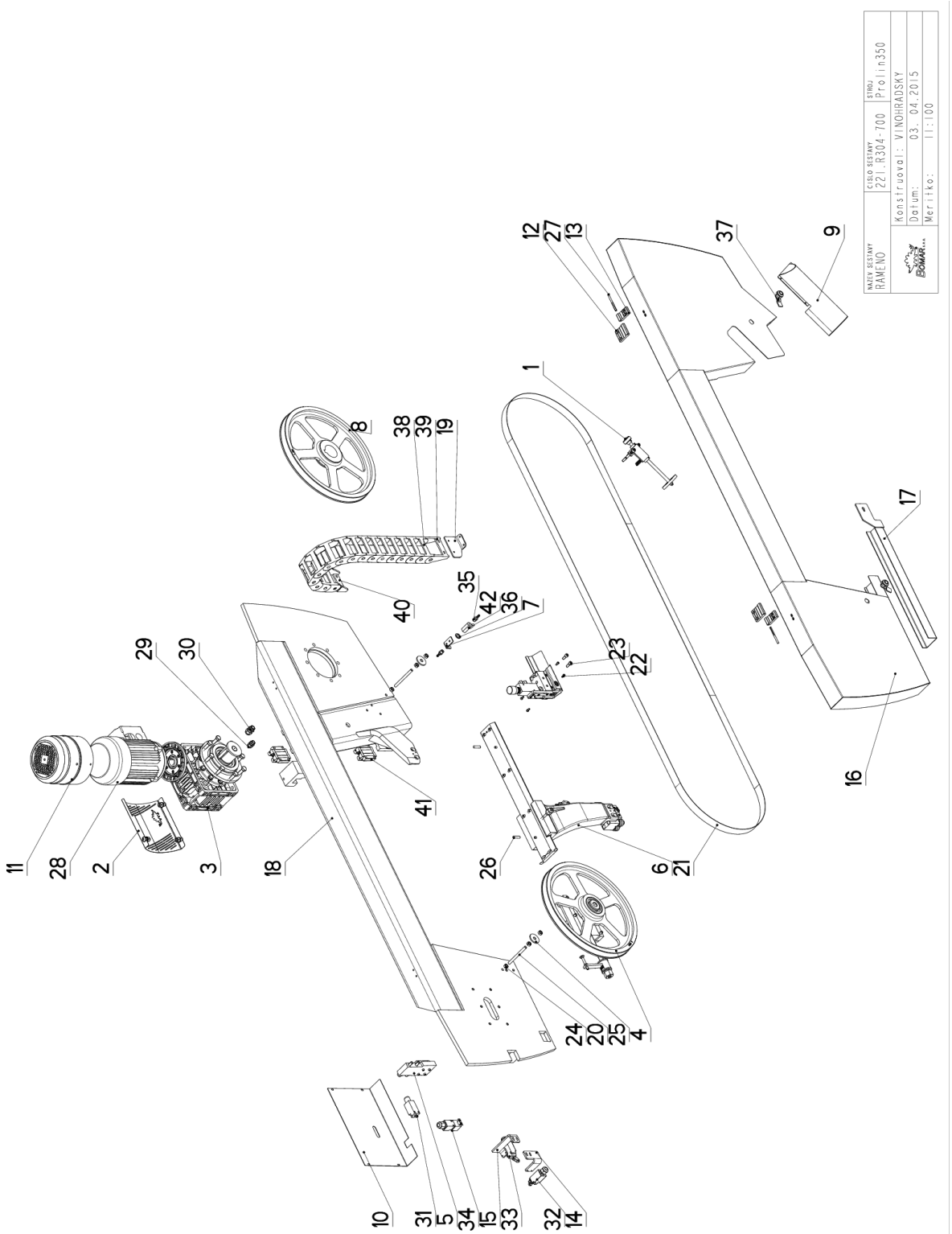

7.14.3. 201.R304-700

Kusovník / Piece list / Stückliste -
Rameno / Saw arm / Sägerahmen
Proline 420.350 H

32	91.173.008	0	SPINAC KONCOVY / END SWITCH / ENDSCHALTER		1
33	91.173.009		SPINAC KONC.S KLADK. / END SWITCH WITH PULLEY / ENDSCHALTER MIT ROLLE	PZ-FR605-M2	1
34	91.173.012	0	SPINAC KONCOVY / END SWITCH / ENDSCHALTER		1
35	94.202.002	0	REDUKCE / REDUCTION / ADAPTOR / REDUKTION	REDUKCE 6/R1/4"	2
36	96.081.001	0	KROUZEK TESNICI / SEAL RING / DICHTUNGSRING	23x15x3	1
37	99.104.002	0	ZAMEK / LOCK / SCHLOSS	ZAMEK CINSKY	2
38	99.170.001	0	RETEZ ENERGII / ENERGY BELT / ENERGIEKETTE	0555.030.075.100	15
39	99.173.001	0	RETEZ ENERGII / ENERGY BELT / ENERGIEKETTE	KONCOVKA VNEJ	1
40	99.173.002	0	RETEZ ENERGII / ENERGY BELT / ENERGIEKETTE	KONCOVKA VNIT	1
41	99.201.046	0	VEDENI LINEARNI / LINEAR GUIDE / LINEARE FÜHRUNG	MSA25E SS F0 N	2
42	99.260.003	0	VENTIL / VALVE / VENTIL	1/4"	1

1.ZRUS.NAPINANI 201.M308-000 A NAHR.201.M308-100. 045/ZM225 18.9.2013 SLEZACKOVA
2.ZRUS.KONZOLA 201.R204-020 A NAHRAZENA 201.R304-040. 229/ZM249 15.10.2013 SLEZACKOVA
3.ZRUS.KRYT 30.M304-011 A NAHR.30.R304-012. 090/ZM108 14.5.2014 SLEZACKOVA
4.ZRUS.VENTILATOR 30.M304-060 A NAHR.30.M304-060. 120/ZM142 24.6.2014 SLEZACKOVA
5.PRIDAN KRYT PREVODOVKY 201.M304-022. 005/ZM061 3.4.2015 SLEZACKOVA

Cislo Sestavy/Number of assembly/Nummer der Baugruppe; Verze (Ver.)/Version/Version; Nazev sestavy/Assembly title/Name der Baugruppe; Pozice (Poz.)/Position/Position;
Objednaci cislo/Purchase order number/Bestellnummer; Nazev polozky/Volume title/Name der Position; Rozmer/Stock size/Abmessung

7.15. 201.R304-800
Rameno / Saw arm / Sägerahmen
Proline 420.350 Hsx

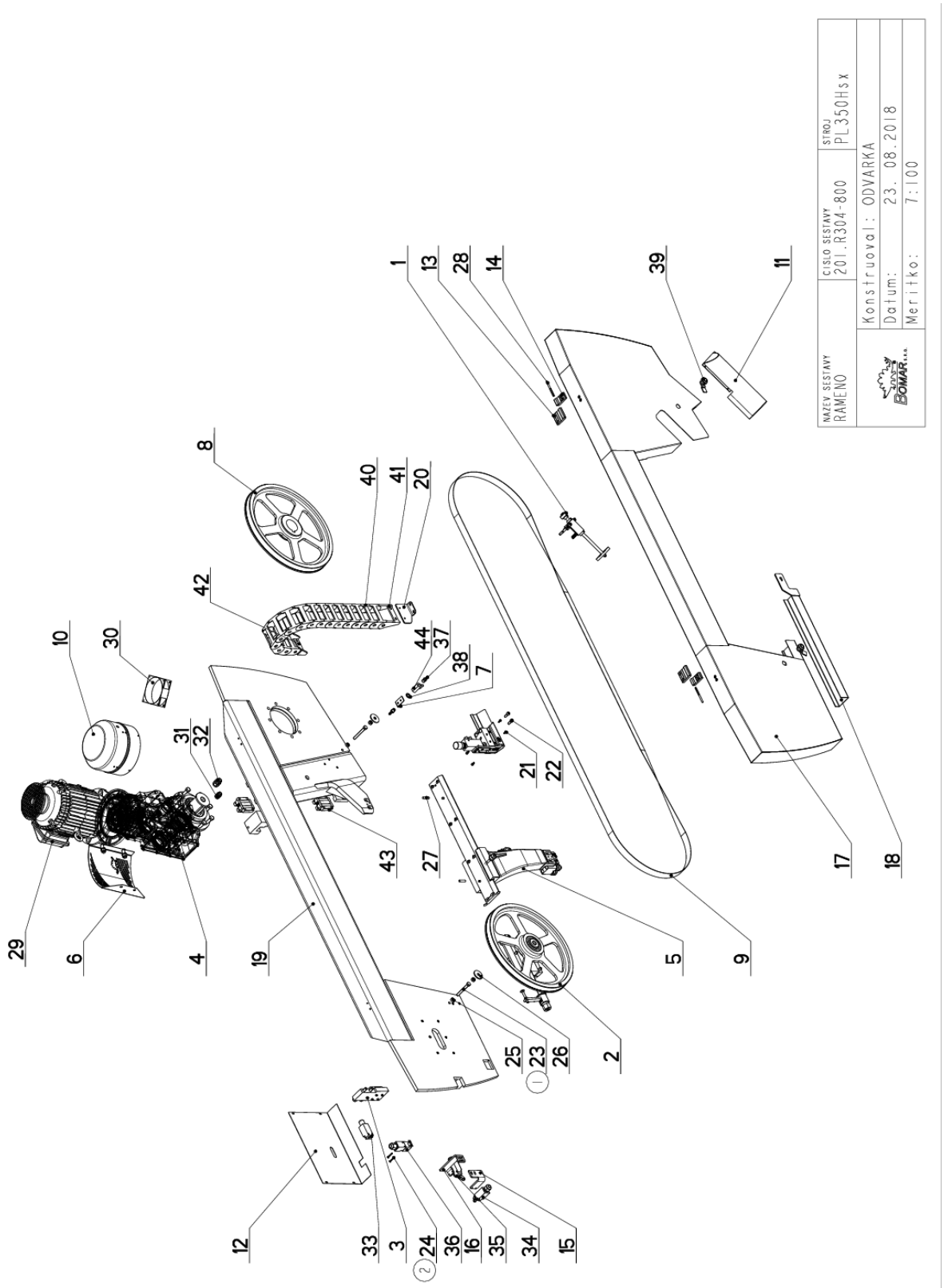

7.15.1. 201.R304-800
Kusovník / Piece list / Stückliste - Rameno / Saw arm / Sägerahmen Proline 420.350 Hsx

Cislo Sestavy	Ver.	Nazev sestavy
201.R304-800	2	RAMENO/SAW ARM/SÄGERAHMEN

Poz.	Objednaci cislo	Ver.	Nazev polozky	Rozmer	Ks
1	201.M304-020	0	KARTAC / BRUSH / BÜRSTE		1
2	201.M308-100	1	NAPINANI / TENSIONING / SPANNUNG		1
3	201.R304-040	0	KONZOLA / CONSOLE / KONSOLE		1
4	201.R305-500	0	POHON / TRANSMISSION / GETRIEBE		1
5	201.R310-000	1	VEDENI PASU / BELT GUIDE / SÄGEBANDFÜHRUNG		1
6	201.R404-022	0	KRYT / COVER / ABDECKUNG		1
7	30.1814-011	2	DRZAK / HOLDER / HALTER	P 3x76	1
8	30.2904-003	3	KOLO HNACI / DRIVE WHEEL / ANTRIEBSRAD	ODLITEK	1
9	30.2904-913	0	PAS PILOVY / SAW BELT / SÄGEBAND	4780x32(4)x1,1	1
10	30.4304-018	4	VENTILATOR / VENTILATOR / VENTILATOR		1
11	30.M304-009	0	KRYT KARTACKU / BRUSH COVER / BÜRSTENABDECKUNG		1
12	30.M304-017	0	KRYT NAPINANI / TENSIONING COVER / BANDSPANNUNGSABDECKUNG	P 1.5x310	1
13	30.R304-006	3	PANT / BOARD / PLATTE	PROFIL	2
14	30.R304-007	2	PANT / BOARD / PLATTE	PROFIL	2
15	30.R304-008	0	DRZAK / HOLDER / HALTER	P 6x80	1
16	30.R304-009	1	DRZAK / HOLDER / HALTER	P 6x74	1
17	30.R304-012	1	KRYT / COVER / ABDECKUNG		1
18	30.R304-016	1	KRYT PASU / BELT COVER / BANDABDECKUNG		1
19	30.R304-201	5	RAMENO / SAW ARM / SÄGERAHMEN		1
20	30.T304-014	1	DRZAK / HOLDER / HALTER	P 4x100	1
21	90.001.25.007	0	SROUB IMBUS / ALLEN HEAD BOLT / IMBUSSCHRAUBE	M5X10	4
22	90.001.25.032	0	SROUB IMBUS / ALLEN HEAD BOLT / IMBUSSCHRAUBE	8x20	2
23	90.005.55.080 (1)	0	SROUB 6HRANNY / 6 SIDED BOLT / SECHSKANTSCHRAUBE	SROUB M10X80	2
24	90.013.9Z.104 (2)	0	SROUB PULKULATY / HALF ROUND BOLT / HALBRUNDSCHRAUBE	M4x30	2
25	90.100.55.006	0	MATICE / NUT / MUTTER	MATICE _ M10	4
26	90.151.50.002	0	PODLOZKA / WASHER / UNTERLEGSCHEIBE	PODLOZKA 12	2
27	90.302.0Z.003	0	KUZEL. KOLIK S ZAV. / TAPER PIN + THREAD / KEGELBOLZEN + GEWINDE	KOLIK 8X36	2
28	90.307.0Z.001	0	KOLIK / PIN / BOLZEN	D6	2
29	91.001.197	0	ELEKTROMOTOR / ELECTRIC MOTOR / ELEKTROMOTOR	W22-MHERAXXL-112M-04	1
30	91.015.126	0	VENTILATOR / VENTILATOR / VENTILATOR	VENTILATOR RDH1238,B2	1
31	91.070.011	0	VYVODKA / BUSHING / TÜLLE	M16x1.5	1
32	91.070.012	0	VYVODKA / BUSHING / TÜLLE	M20x1.5	1
33	91.173.007	0	SPINAC KONCOVY / END SWITCH / ENDSCHALTER	-RIWK	1
34	91.173.008	0	SPINAC KONCOVY / END SWITCH / ENDSCHALTER		1

Cislo Sestavy/Number of assembly/Nummer der Baugruppe; Verze (Ver.)/Version/Version; Nazev sestavy/Assembly title/Name der Baugruppe; Pozice (Poz.)/Position/Position; Objednaci cislo/Purchase order number/Bestellnummer; Nazev polozky/Volume title/Name der Position; Rozmer/Stock size/Abmessung

7.15.2. 201.R304-800
Rameno / Saw arm / Sägerahmen
Proline 420.350 Hsx

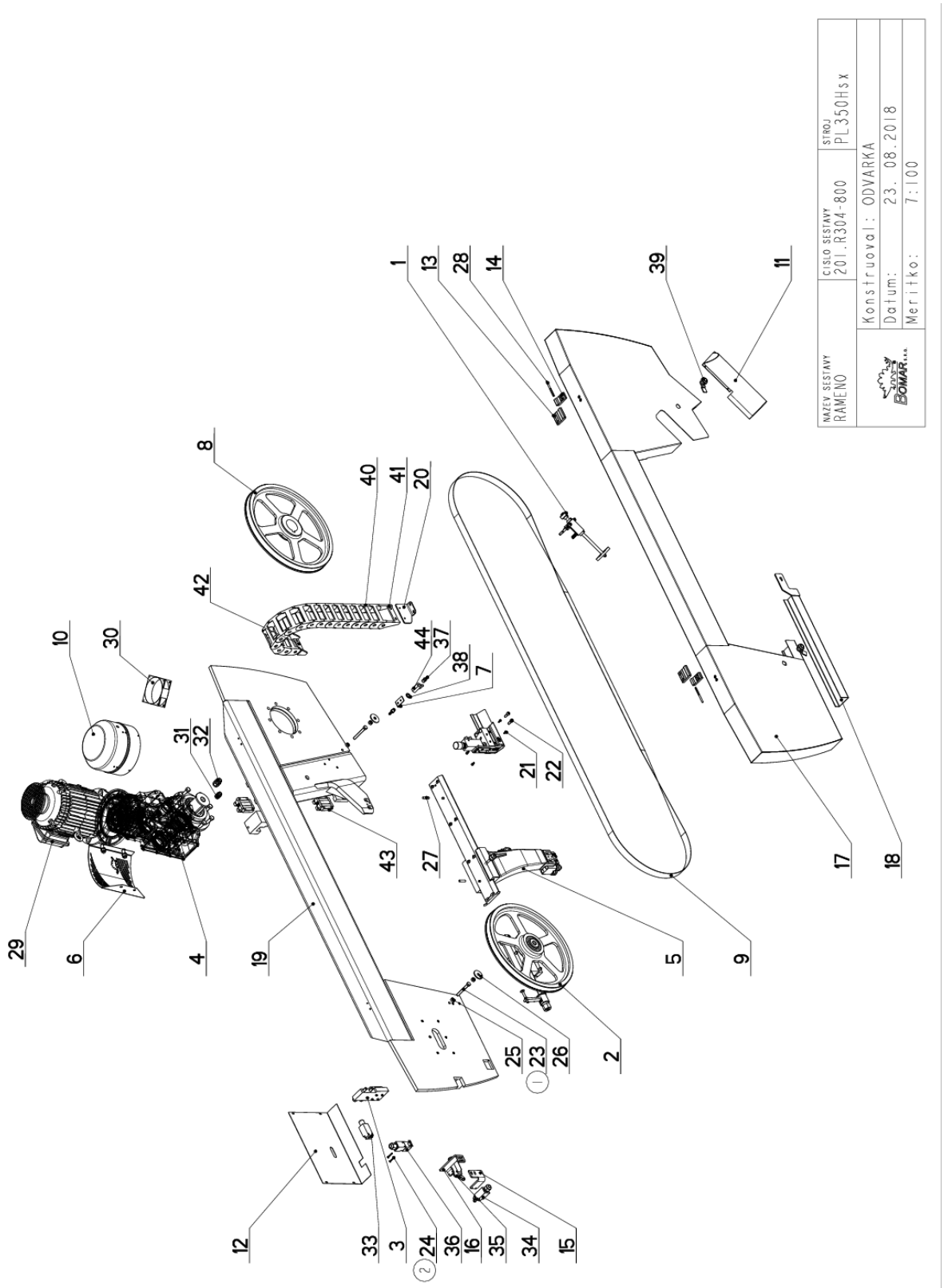

7.15.3. 201.R304-800

Kusovník / Piece list / Stückliste - Rameno / Saw arm / Sägerahmen Proline 420.350 Hsx

35	91.173.009	0	SPINAC KONC.S KLADK. / END SWITCH WITH PULLEY / ENDSCHALTER MIT ROLLE	PZ-FR605-M2	1
36	91.173.012	0	SPINAC KONCOVY / END SWITCH / ENDSCHALTER		1
37	94.202.002	0	REDUKCE / REDUCTION / ADAPTOR / REDUKTION	REDUKCE 6/R1/4"	2
38	96.081.001	0	KROUZEK TESNICI / SEAL RING / DICHTUNGSRING	23x15x3	1
39	99.104.002	0	ZAMEK / LOCK / SCHLOSS	ZAMEK CINSKY	2
40	99.170.001	0	RETEZ ENERGII / ENERGY BELT / ENERGIEKETTE	0555.030.075.100	15
41	99.173.001	0	RETEZ ENERGII / ENERGY BELT / ENERGIEKETTE	KONCOVKA VNEJ	1
42	99.173.002	0	RETEZ ENERGII / ENERGY BELT / ENERGIEKETTE	KONCOVKA VNIT	1
43	99.201.046	0	VEDENI LINEARNI / LINEAR GUIDE / LINEARE FÜHRUNG	MSA25E SS F0 N	2
44	99.260.003	0	VENTIL / VALVE / VENTIL	1/4"	1

1.ZRUSENA TYC 30.M404-056 A NAHR.SROUBEM 90.005.55.080. 291/ZM046 19.2.2018 SLEZACKOVA
2.PRID. 2xSROUB M4x30 90.013.9Z.104. 171/ZM290 23.8.2018 SZABARI

Cislo Sestavy/Number of assembly/Nummer der Baugruppe; Verze (Ver.)/Version/Version; Nazev sestavy/Assembly title/Name der Baugruppe; Pozice (Poz.)/Position/Position;
Objednaci cislo/Purchase order number/Bestellnummer; Nazev polozky/Volume title/Name der Position; Rozmer/Stock size/Abmessung

7.16. 201.M304-020
Kartáč / Brush / Bürste

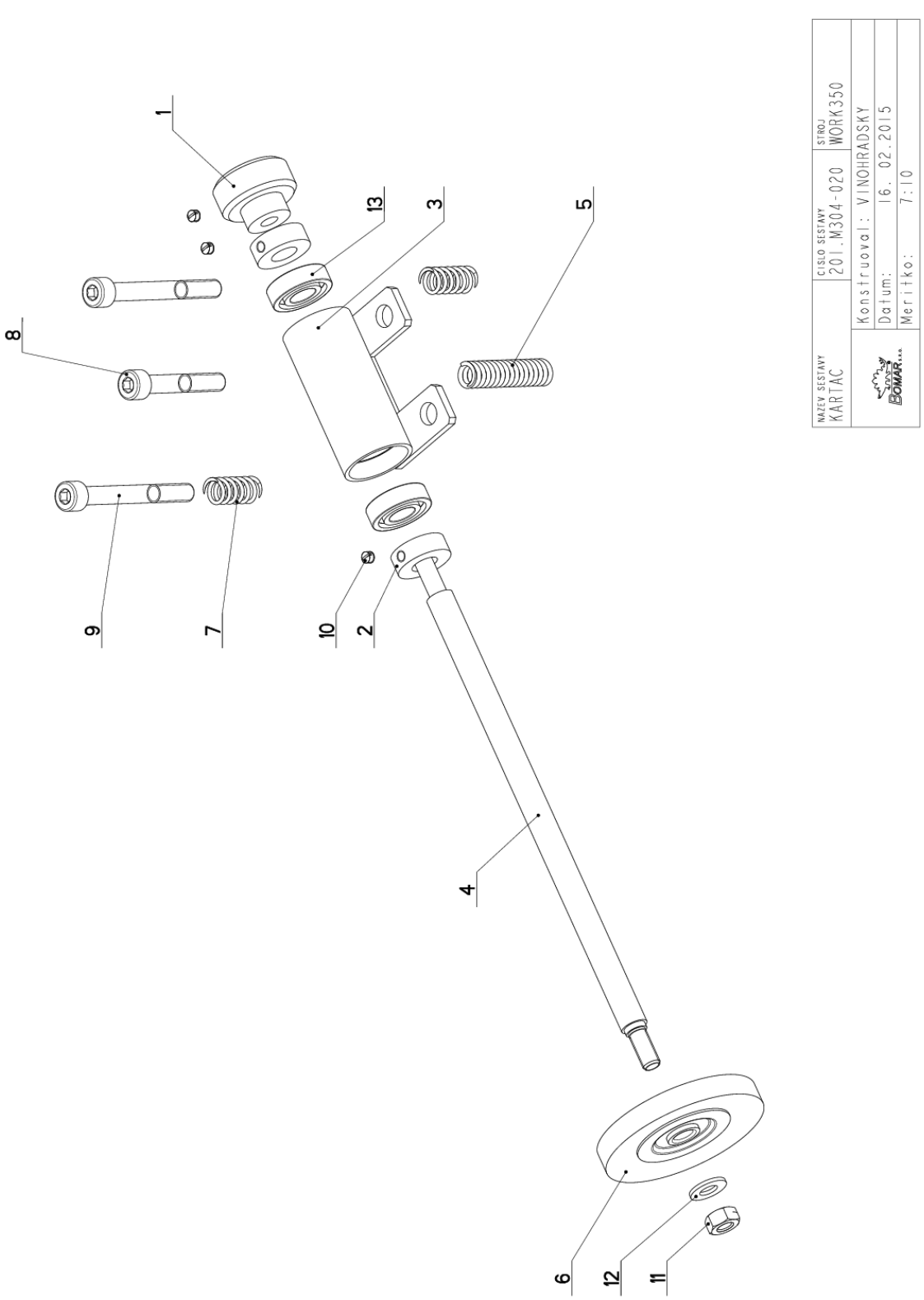

7.16.1. 201.M304-020
Kusovník / Piece list / Stückliste - Kartáč / Brush / Bürste

Cislo Sestavy	Ver.	Nazev sestavy
201.M304-020	0	KARTAC/BRUSH/BÜRSTE

Poz.	Objednaci cislo	Ver.	Nazev polozky	Rozmer	Ks
1	201.0814-204	0	KOLECKO / WHEEL / ROLLE	SESTAVA	1
2	30.0814-207	0	KROUZEK / RING / RING	d 25	2
3	30.9214-301	2	DRZAK / HOLDER / HALTER		1
4	30.M304-021	0	HRIDEL / SHAFT / WELLE	d 12	1
5	31.0305-211	0	PRUZINA / SPRING / FEDER	2x12x50x15,5	1
6	31.0814-208	0	KARTAC / BRUSH / BÜRSTE		1
7	31.1506-115	0	PRUZINA / SPRING / FEDER	1.6x12x25x7.5	2
8	90.001.25.038	0	SROUB IMBUS / ALLEN HEAD BOLT / IMBUSSCHRAUBE	M8X50	1
9	90.001.25.095	0	SROUB IMBUS / ALLEN HEAD BOLT / IMBUSSCHRAUBE	M8X70	2
10	90.003.20.001	0	SROUB STAVECI / ADJUSTMENT BOLT / STELLSCHRAUBE	SROUB M5X6	3
11	90.100.55.005	0	MATICE / NUT / MUTTER	MATICE _ M8	1
12	90.150.50.005	0	PODLOZKA / WASHER / UNTERLEGSCHEIBE	PODLOZKA 8,4	1
13	95.001.005	0	LOZISKO / BEARING / LAGER	6001 2RS	2

Cislo Sestavy/Number of assembly/Nummer der Baugruppe; Verze (Ver.)/Version/Version; Nazev sestavy/Assembly title/Name der Baugruppe; Pozice (Poz.)/Position/Position; Objednaci cislo/Purchase order number/Bestellnummer; Nazev polozky/Volume title/Name der Position; Rozmer/Stock size/Abmessung

7.17. 201.0814-204
Kolečko / Wheel / Rolle

Cislo Sestavy	Ver.	Nazev sestavy
201.0814-204	0	KOLECKO/WHEEL/ROLLE

Poz.	Objednaci cislo	Ver.	Nazev polozky	Rozmer	Ks
1	30.0814-204.1	0	KOLECKO / /	d 35	1
2	30.0814-204.2	0	NABOJ / /	d 20	1

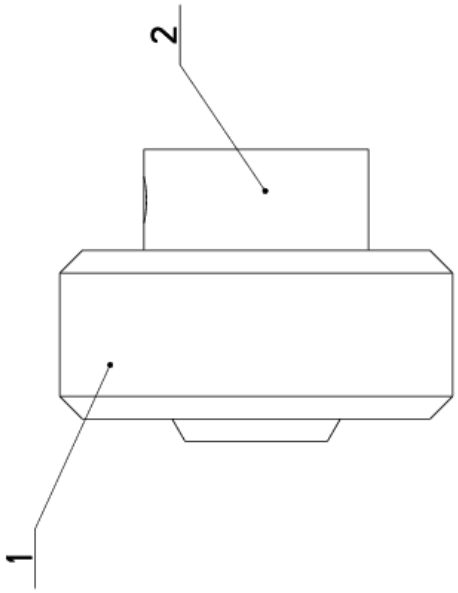

Cislo Sestavy/Number of assembly/Nummer der Baugruppe; Verze (Ver.)/Version/Version; Nazev sestavy/Assembly title/Name der Baugruppe; Pozice (Poz.)/Position/Position;
Objednaci cislo/Purchase order number/Bestellnummer; Nazev polozky/Volume title/Name der Position; Rozmer/Stock size/Abmessung

7.18. 201.M308-100
Napínání / Tensioning / Spannung

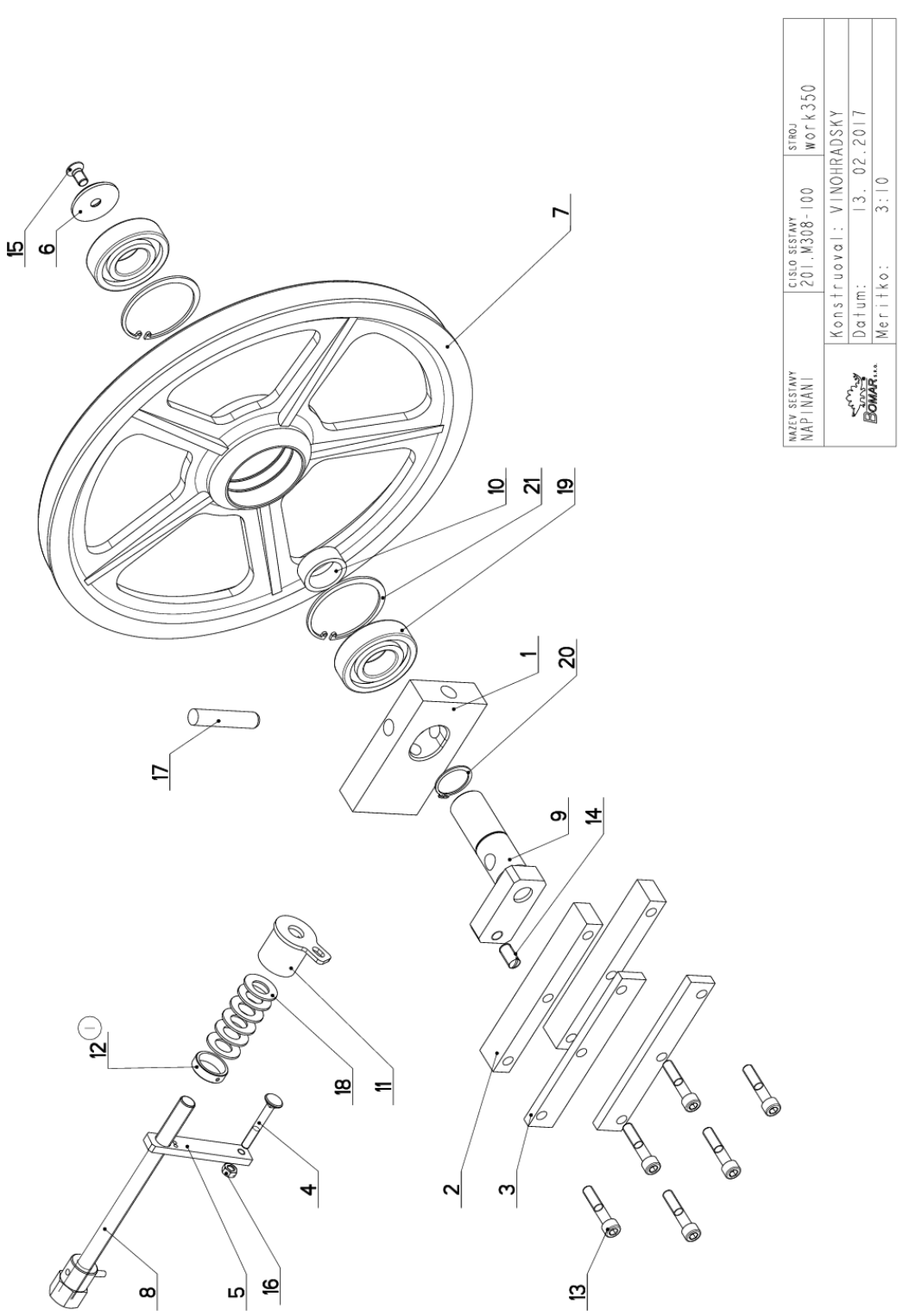

7.19. 201.M308-100

Kusovník / Piece list / Stückliste - Napínání / Tensioning / Spannung

Cislo Sestavy	Ver.	Nazev sestavy
201.M308-100	1	NAPINANI/TENSIONING/SPANNUNG

Poz.	Objednaci cislo	Ver.	Nazev polozky	Rozmer	Ks
1	30.0808-001	1	KOSTKA NAPINANI / TENSIONING CUBE / BANDSPANNUNGSWÜRFEL	80x30	1
2	30.0808-002	1	LISTA VODICI / LEAD TRIM / FÜHRUNGSLEISTE	30x20	2
3	30.0808-006	1	LISTA / TRIM / LEISTE	HR 30x10	2
4	30.0808-007	0	SROUB / BOLT / SCHRAUBE	M8x60	1
5	30.1708-004	4	DRZAK / HOLDER / HALTER	HR 20x8	1
6	30.2908-001	1	PODLOZKA / WASHER / UNTERLEGSCHEIBE	d 50	1
7	30.2908-103	2	KOLO NAPINACI / TENSIONING WHEEL / UMLENKRAD	ODLITEK	1
8	30.4008-001	2	SROUB / BOLT / SCHRAUBE		1
9	30.4808-101	4	CEP NAPINANI / TENSIONING LUG / SPANNUNGSBOLZEN		1
10	30.4808-103	1	KROUZEK DISTANCNI / DISTANCE RING / DISTANZRING	TR 45x5	1
11	30.6908-102	1	DRZAK / HOLDER / HALTER		1
12	30.M208-001 (1)	0	KROUZEK / RING / RING	TR 35x6	1
13	90.001.25.052	0	SROUB IMBUS / ALLEN HEAD BOLT / IMBUSSCHRAUBE	M10X50	6
14	90.002.20.013	0	SROUB STAVECI / ADJUSTMENT BOLT / STELLSCHRAUBE	SROUB M12X25	1
15	90.011.27.008	0	ZAPUSTNY IMBUS / COUNTERSINK BOLT / SENKSCHRAUBE	SROUB M10X20	1
16	90.100.55.005	0	MATICE / NUT / MUTTER	MATICE _ M8	1
17	90.300.02.003	0	KOLIK VALC. KAL. / CYLINDRICAL PIN TEMPERED / ZYLINDERSTIFT GEHARTET	KOLIK 16X80	1
18	90.350.02.002	0	PRUZINA TALIROVA / DISC SPRING / TELLERFEDER	35,5X18,3X2,0X2,8	6
19	95.001.026	0	LOZISKO / BEARING / LAGER	6307 2RS	2
20	95.800.014	0	SEGR HRIDEL. / OUTSIDE SAFETY RING / SICHERUNGSRING AUSSEN	POJISTNY KROUZEK 35	1
21	95.801.013	0	SEGR DIRA / INSIDE SAFETY RING / SICHERUNGSRING INNEN	POJISTNY KROUZEK 80	2

1.ZRUSEN KROUZEK 30.3508-004 A NAHR.30.M208-001. 017/ZM050 13.2.2017 SLEZACKOVA

Cislo Sestavy/Number of assembly/Nummer der Baugruppe; Verze (Ver.)/Version/Version; Nazev sestavy/Assembly title/Name der Baugruppe; Pozice (Poz.)/Position/Position; Objednaci cislo/Purchase order number/Bestellnummer; Nazev polozky/Volume title/Name der Position; Rozmer/Stock size/Abmessung

7.20. 201.R304-040
Konzola/ console/ Konsole

Cislo Sestavy
201.R304-040

Ver.
0

Nazev sestavy
KONZOLA/CONSOLE/KONSOLE

Poz.	Objednaci cislo	Ver.	Nazev polozky	Rozmer	Ks
1	30.R204-041	0	KONZOLA / CONSOLE / KONSOLE	HR 70x20	1
2	90.150.50.006	0	PODLOZKA / WASHER / UNTERLEGSCHEIBE	PODLOZKA 10,5	2
3	90.001.25.113	0	SROUB IMBUS / ALLEN HEAD BOLT / IMBUSSCHRAUBE	M10X80	2
4	99.201.060	0	VOZIK LINEARNIHO VEDENI / LINEAR GUIDE CART / LINEARFUHRUNGSWAGEN	MSA20S SS F0 N	1
5	90.001.25.010	0	SROUB IMBUS / ALLEN HEAD BOLT / IMBUSSCHRAUBE	M5X20	4

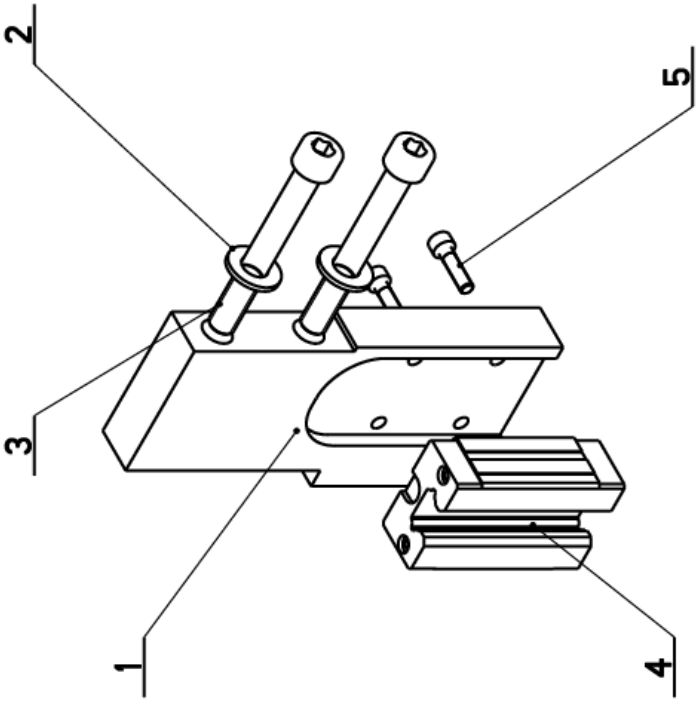

Cislo Sestavy/Number of assembly/Nummer der Baugruppe; Verze (Ver.)/Version/Version; Nazev sestavy/Assembly title/Name der Baugruppe; Pozice (Poz.)/Position/Position;
Objednaci cislo/Purchase order number/Bestellnummer; Nazev polozky/Volume title/Name der Position; Rozmer/Stock size/Abmessung

7.21. 201.R310-000
Vedení pásu/ Belt guide/ Sägebandführung

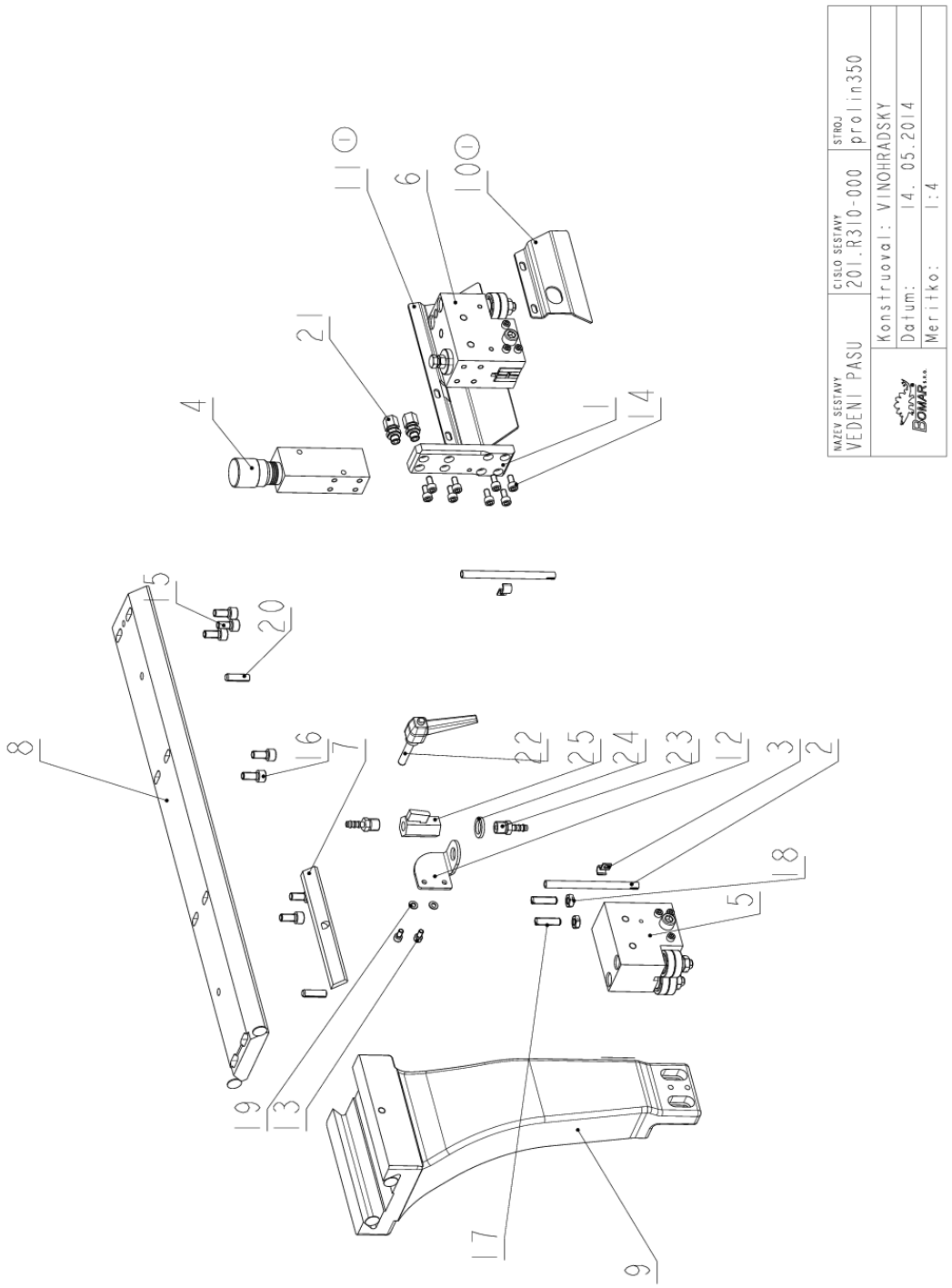

7.21.1. 201.R310-000
Kusovník / Piece list / Stückliste - Vedení pásu/ Belt guide/ Sägebandführung

Cislo Sestavy	Ver.	Nazev sestavy
201.R310-000	1	VEDENI PASU/BELT GUIDE/SÄGEBANDFÜHRUNG

Poz.	Objednaci cislo	Ver.	Nazev polozky	Rozmer	Ks
1	30.2016-006	0	DESKA / BOARD / PLATTE	HR 40x12	1
2	30.3510-004	0	TRUBKA / TUBE / ROHR	TR 8x 1	2
3	30.9010-003	0	DRZAK / HOLDER / HALTER	P1.5x10	2
4	201.2016-000	0	REGULACE PRITLAKU / PRESSURE REGULATION / SCHNITTDRUCKREGULATION		1
5	201.Y310-300	1	KOSTKA VODICI / LEAD CUBE / FÜHRUNGSKLOTZ		1
6	201.Y310-400	1	KOSTKA VODICI / LEAD CUBE / FÜHRUNGSKLOTZ		1
7	30.M210-008	0	LISTA / TRIM / LEISTE	HR 25x6	1
8	30.M310-002	3	LISTA VODICI / LEAD TRIM / FÜHRUNGSLEISTE	HR 90x20	1
9	30.M310-004	1	KONZOLA / CONSOLE / KONSOLE		1
10	30.M310-056 (1)	0	KRYT PASU / BELT COVER / BANDABDECKUNG	P 2x95	1
11	30.M310-057 (1)	0	KRYT PASU / BELT COVER / BANDABDECKUNG	P 2x95	1
12	30.Y310-008	0	DRZAK / HOLDER / HALTER	P3-50	1
13	90.001.25.007	0	SROUB IMBUS / ALLEN HEAD BOLT / IMBUSSCHRAUBE	M5X10	2
14	90.001.25.016	0	SROUB IMBUS / ALLEN HEAD BOLT / IMBUSSCHRAUBE	M6X12	8
15	90.001.25.031	0	SROUB IMBUS / ALLEN HEAD BOLT / IMBUSSCHRAUBE	8x16	1
16	90.001.25.105	0	SROUB IMBUS / ALLEN HEAD BOLT / IMBUSSCHRAUBE	M8X18	6
17	90.002.2D.022	0	SROUB STAVECI / ADJUSTMENT BOLT / STELLSCHRAUBE	SROUB M8X30	2
18	90.101.55.001	0	MATICE / NUT / MUTTER	MATICE M8	2
19	90.150.50.003	0	PODLOZKA / WASHER / UNTERLEGSCHEIBE	PODLOZKA 5,3	2
20	90.303.0Z.021	0	KOLIK PRUZNY / PIN / BOLZEN	KOLIK 8X28	2
21	92.002.102	0	SROUBENI / BOLTING / VERSCHRAUBUNG	S-GEV-8LLR	2
22	94.008.003	0	PAKA UPINACI / ATTACHMENT LEVER / SPANNHEBEL	M8x40	1
23	94.202.002	0	REDUKCE / REDUCTION / ADAPTOR / REDUKTION	REDUKCE 6/R1/4"	2
24	96.081.001	0	KROUZEK TESNICI / SEAL RING / DICHTUNGSRING	23x15x3	1
25	99.260.003	0	VENTIL / VALVE / VENTIL	1/4"	1

1.ZRUS.KRYT PASU 30.M310-006 A NAHR.30.M310-056,ZRUS.KRYT PASU 30.M310-007 A NAHR.30.M310-057.
090/ZM108 15.5.2014 SLEZACKOVA

Cislo Sestavy/Number of assembly/Nummer der Baugruppe; Verze (Ver.)/Version/Version; Nazev sestavy/Assembly title/Name der Baugruppe; Pozice (Poz.)/Position/Position;
Objednaci cislo/Purchase order number/Bestellnummer; Nazev polozky/Volume title/Name der Position; Rozmer/Stock size/Abmessung

7.22. 201.2016-000
Regulace přítlaku/ Pressure regulation/ Schnittdruckregulation

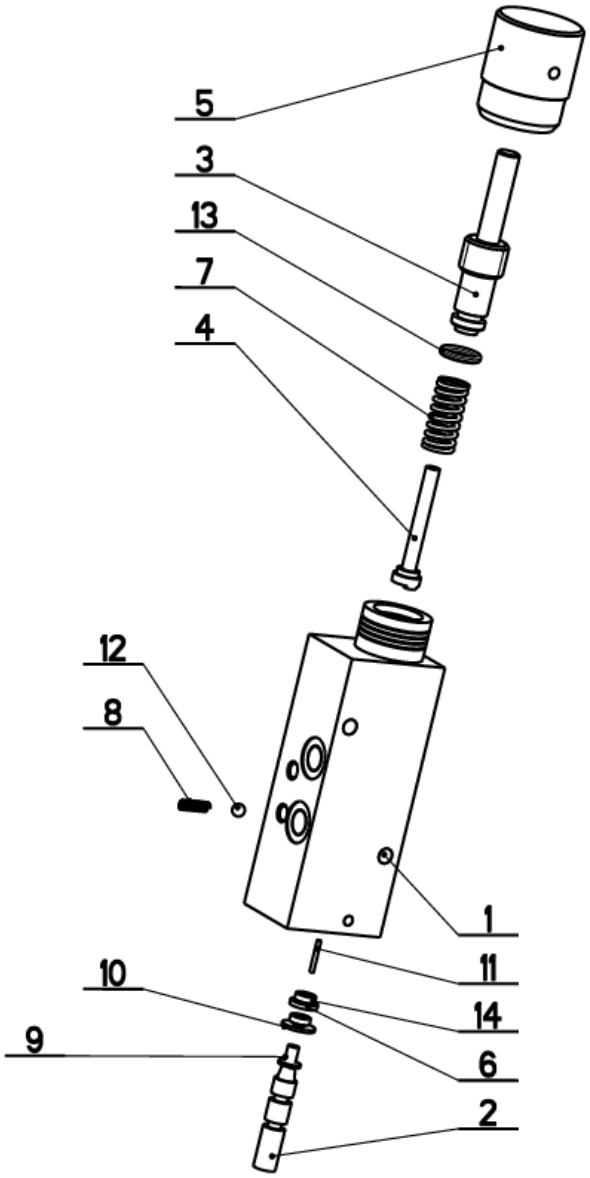

NAZEV SESTAVY	CISLO SESTAVY	STROJ
REGULACE PRITLAKU	201.2016-000	STG340DGS
	Konstruoval: &konstruoval	
	Datum: 19. 02.2010	
	Meritko: 1:2	

7.22.1. 201.2016-000

Kusovník / Piece list / Stückliste -

Regulace přítlaku/ Pressure regulation/ Schnittdruckregulation

Cislo Sestavy	Ver.	Nazev sestavy
201.2016-000	0	REGULACE PRITLAKU/PRESSURE REGULATION/SCHNITTDRUCKREGULATION

Poz.	Objednaci cislo	Ver.	Nazev polozky	Rozmer	Ks
1	30.2016-001	2	TELESO / BODY / KÖRPER	HR 40 x 40	1
2	30.2016-002	0	JEHLA / NEEDLE / NADEL	KR 8	1
3	30.2016-003	0	SROUB / BOLT / SCHRAUBE	d 16	1
4	30.2016-004	0	CIDLO / SENSOR / SENSOR	d 10	1
5	30.2016-005	0	KOLECKO / WHEEL / ROLLE	d 32	1
6	30.2016-009	0	KROUZEK / RING / RING	TR 10x1	1
7	31.2016-007	0	PRUZINA / SPRING / FEDER	d 11.6xx1.6	1
8	31.2016-008	0	PRUZINA / SPRING / FEDER	0.25x3,6x12x9.5	1
9	90.099.002	0	SROUB PULKULATY / HALF ROUND BOLT / HALBRUNDSCHRAUBE	4x6	1
10	90.151.50.003	0	PODLOZKA / WASHER / UNTERLEGSCHEIBE	PODLOZKA 4	1
11	95.690.001	0	JEHLA / NEEDLE / NADEL	1.5x11.8	1
12	95.691.001	0	KULICKA LOZISKA / BALL / KUGEL	RB 4.5	1
13	96.001.003	0	KROUZEK O STATICKY / STATIC O RING / O-RING STATISCH	8X2	1
14	96.002.001	0	KROUZEK O DYNAMICKY / DYNAMIC O RING / O-RING DYNAMISCH	4X2	2

Cislo Sestavy/Number of assembly/Nummer der Baugruppe; Verze (Ver.)/Version/Version; Nazev sestavy/Assembly title/Name der Baugruppe; Pozice (Poz.)/Position/Position; Objednaci cislo/Purchase order number/Bestellnummer; Nazev polozky/Volume title/Name der Position; Rozmer/Stock size/Abmessung

7.23. 201.Y310-300
Kostka vodicí/ Lead cube/Führungsklotz

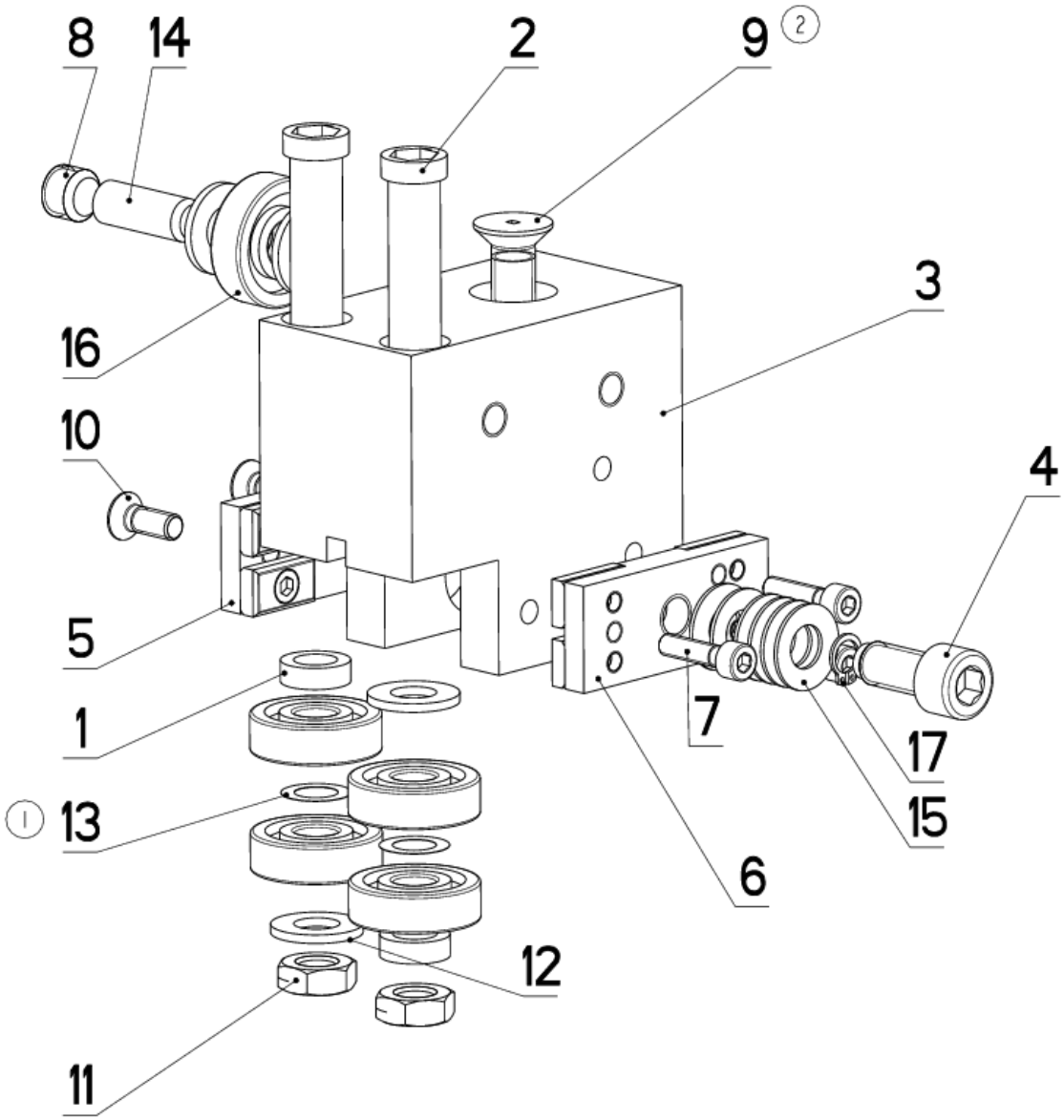

NAZEV SESTAVY	CISLO SESTAVY	STROJ
KOSTKA VODICI	201.Y310-300	IND360

BOMAR	Konstruoval: HLADIL
	Datum: 16. 12.2019
	Meritko: 4:5

7.23.1. 201.Y310-300
Kusovník / Piece list / Stückliste - Kostka vodicí/ Lead cube/Führungsklotz

Cislo Sestavy	Ver.	Nazev sestavy
201.Y310-300	2	KOSTKA VODICI/LEAD CUBE/FÜHRUNGSKLOTZ

Poz.	Objednaci cislo	Ver.	Nazev polozky	Rozmer	Ks
1	30.C210-403	1	DISTANC / DISTANCE / DISTANZ	TR 16x3	2
2	30.Y310-212	3	EXCENTR / CAM / EXZENTER	M12	2
3	30.Y310-301	3	KOSTKA VODICI / LEAD CUBE / FÜHRUNGSKLOTZ	HR 80x50	1
4	30.Y310-306	1	SROUB IMBUS / ALLEN HEAD BOLT / IMBUSSCHRAUBE	M10x25	1
5	30.Y310-310	0	DRZAK TVRDOKOVU / POA HOLDER / HM-HALTER		1
6	30.Y310-320	0	DRZAK TVRDOKOVU / POA HOLDER / HM-HALTER		1
7	90.001.25.010	0	SROUB IMBUS / ALLEN HEAD BOLT / IMBUSSCHRAUBE	M5X20	3
8	90.002.2D.016	0	SROUB STAVECI / ADJUSTMENT BOLT / STELLSCHRAUBE	SROUB M12X10	1
9	90.011.27.008 (2)	0	ZAPUSTNY IMBUS / COUNTERSINK BOLT / SENKSCHRAUBE	SROUB M10X20	1
10	90.011.27.017	0	ZAPUSTNY IMBUS / COUNTERSINK BOLT / SENKSCHRAUBE	SROUB M6X16	2
11	90.101.55.002	0	MATICE / NUT / MUTTER	MATICE M10	2
12	90.150.50.006	0	PODLOZKA / WASHER / UNTERLEGSCHEIBE	PODLOZKA 10,5	4
13	90.154.50.001 (1)	0	PODLOZKA / WASHER / UNTERLEGSCHEIBE	10x16x0.1	2
14	90.301.0Z.001	0	KOLIK VALCOVY / CYLINDRICAL PIN SOFT / ZYLINDERSTIFT WEICH	KOLIK 10X28	1
15	90.350.0Z.005	0	PRUZINA TALIROVA / DISC SPRING / TELLERFEDER	20X10.2X1	6
16	95.001.014	0	LOZISKO / BEARING / LAGER	6200 2RS	5
17	95.800.002	0	SEGR HRIDEL. / OUTSIDE SAFETY RING / SICHERUNGSRING AUSSEN	POJISTNY KROUZEK 8	1

1.PRIDANA PODLOZKA 90.154.50.001. 277/ZM294 1.11.2010 SLEZACKOVA
2.PRIDAN 1xSROUB ZAPUSTNY M10x20 90.011.27.008. 003/ZM004 4.1.2016 SLEZACKOVA

Cislo Sestavy/Number of assembly/Nummer der Baugruppe; Verze (Ver.)/Version/Version; Nazev sestavy/Assembly title/Name der Baugruppe; Pozice (Poz.)/Position/Position; Objednaci cislo/Purchase order number/Bestellnummer; Nazev polozky/Volume title/Name der Position; Rozmer/Stock size/Abmessung

7.24. 201.Y310-400
Kostka vodicí/ Lead cube/Führungsklotz

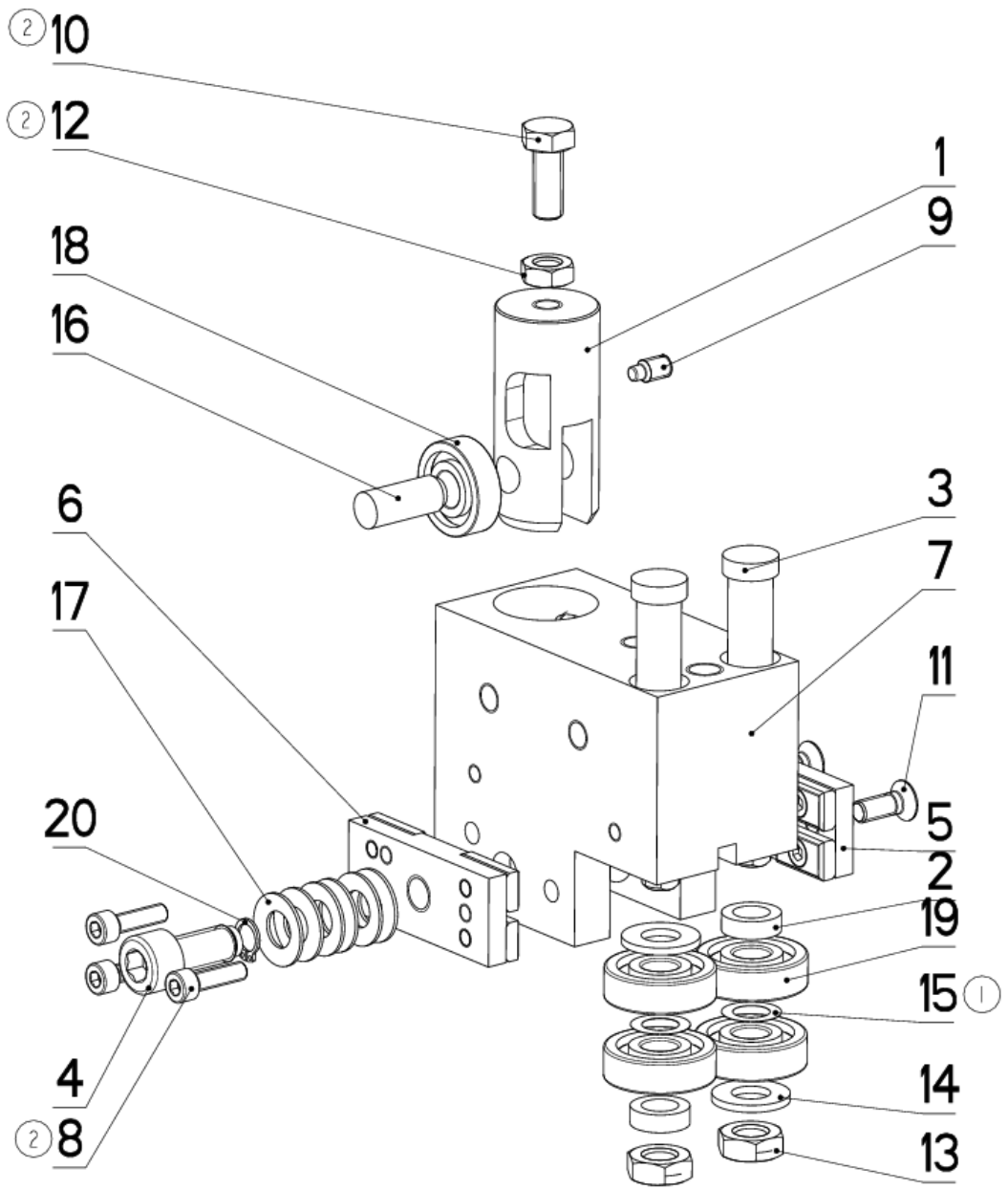

NAZEV SESTAVY	CISLO SESTAVY	STROJ
KOSTKA VODICI	201.Y310-400	IN360
BOMAR	Konstruoval: HLADIL	
	Datum: 05. 02.2016	
	Meritko: 7:10	

7.24.1. 201.Y310-400
Kusovník / Piece list / Stückliste - Kostka vodicí/ Lead cube/Führungsklotz

Cislo Sestavy	Ver.	Nazev sestavy
201.Y310-400	2	KOSTKA VODICI/LEAD CUBE/FÜHRUNGSKLOTZ

Poz.	Objednaci cislo	Ver.	Nazev polozky	Rozmer	Ks
1	30.1810-102	3	DRZAK / HOLDER / HALTER	TYC 28	1
2	30.C210-403	1	DISTANC / DISTANCE / DISTANZ	TR 16x3	2
3	30.Y310-212	2	EXCENTR / CAM / EXZENTER	d 15	2
4	30.Y310-306	0	SROUB IMBUS / ALLEN HEAD BOLT / IMBUSSCHRAUBE	M10x25	1
5	30.Y310-310	0	DRZAK TVRDOKOVU / POA HOLDER / HM-HALTER		1
6	30.Y310-320	0	DRZAK TVRDOKOVU / POA HOLDER / HM-HALTER		1
7	30.Y310-401	4	KOSTKA VODICI / LEAD CUBE / FÜHRUNGSKLOTZ	HR 80x50	1
8	90.001.25.143 (2)	0	SROUB IMBUS / ALLEN HEAD BOLT / IMBUSSCHRAUBE	M5X18	3
9	90.004.2D.002	0	SROUB STAVECI / ADJUSTMENT BOLT / STELLSCHRAUBE	SROUB M6X12	1
10	90.005.55.015 (2)	0	SROUB 6HRANNY / 6 SIDED BOLT / SECHSKANTSCHRAUBE	SROUB M8X20	1
11	90.011.27.017	0	SROUB ZAPUSTNY / COUNTERSINK BOLT / SENKSCHRAUBE	SROUB M6X16	2
12	90.101.55.001 (2)	0	MATICE / NUT / MUTTER	MATICE M8	1
13	90.101.55.002	0	MATICE / NUT / MUTTER	MATICE M10	2
14	90.150.50.006	0	PODLOZKA / WASHER / UNTERLEGSCHEIBE	PODLOZKA 10,5	2
15	90.154.50.001 (1)	0	PODLOZKA / WASHER / UNTERLEGSCHEIBE	10x16x0.1	2
16	90.301.0Z.009	0	KOLIK VALCOVY / CYLINDRICAL PIN SOFT / ZYLINDERSTIFT WEICH	KOLIK 10X26	1
17	90.350.0Z.005	0	PRUZINA TALIROVA / DISC SPRING / TELLERFEDER	20X10.2X1	6
18	95.001.004	0	LOZISKO / BEARING / LAGER	6000 2RS	1
19	95.001.014	0	LOZISKO / BEARING / LAGER	6200 2RS	4
20	95.800.002	0	SEGR HRIDEL. / OUTSIDE SAFETY RING / SICHERUNGSRING AUSSEN	POJISTNY KROUZEK 8	1

1.PRIDANA PODLOZKA 90.154.50.001 .277/ZM294 1.11.2010 SLEZACKOVA

2.ZRUS.SROUB M8x30(90.005.55.017) A NAHR.M8x20(90.005.55.015),ZRUS.MATICE M8(90.100.55.005) A NAHR.MATICI M8(90.101.55.001),ZRUS.SROUB M5x20(90.001.25.010) A NAHR.M8x18(90.001.25.143). 021/ZM041 5.2.2016 SLEZACKOVA

Cislo Sestavy/Number of assembly/Nummer der Baugruppe; Verze (Ver.)/Version/Version; Nazev sestavy/Assembly title/Name der Baugruppe; Pozice (Poz.)/Position/Position; Objednaci cislo/Purchase order number/Bestellnummer; Nazev polozky/Volume title/Name der Position; Rozmer/Stock size/Abmessung

7.25. 201.M304-022
Kryt / Cover / Abdeckung
Proline 420.350 H

Cislo Sestavy
201.M304-022

Ver.
0

Nazev sestavy
KRYT/COVER/ABDECKUNG

Poz.	Objednaci cislo	Ver.	Nazev polozky	Rozmer	Ks
1	30.M304-023	0	PLECH / PLATE / BLECH	P1x238	1
2	90.013.27.028	0	SROUB / BOLT / SCHRAUBE	M12X30_ISO_7380	3
3	90.152.50.006	0	PODLOZKA / WASHER / UNTERLEGSCHEIBE	M12 DIN6798	3
4	90.100.55.007	0	MATICE / NUT / MUTTER	MATICE _ M12	3

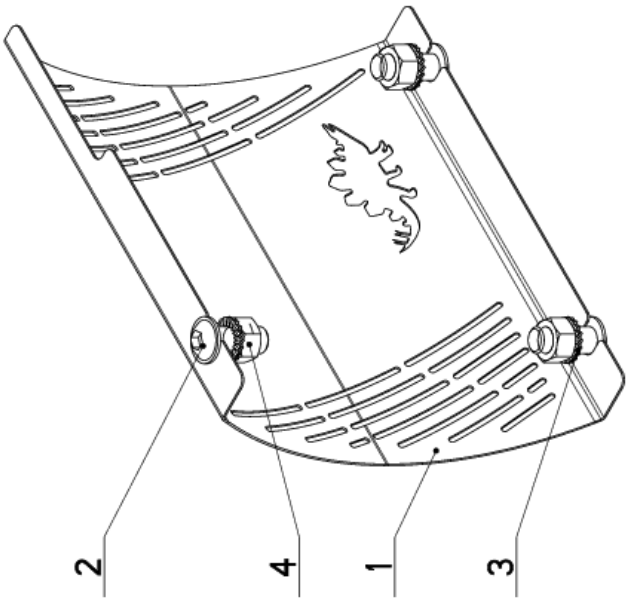

2:5

Cislo Sestavy/Number of assembly/Nummer der Baugruppe; Verze (Ver.)/Version/Version; Nazev sestavy/Assembly title/Name der Baugruppe; Pozice (Poz.)/Position/Position;
Objednaci cislo/Purchase order number/Bestellnummer; Nazev polozky/Volume title/Name der Position; Rozmer/Stock size/Abmessung

7.26. 201.R404-022
Kryt / Cover / Abdeckung
Proline 420.350 Hsx

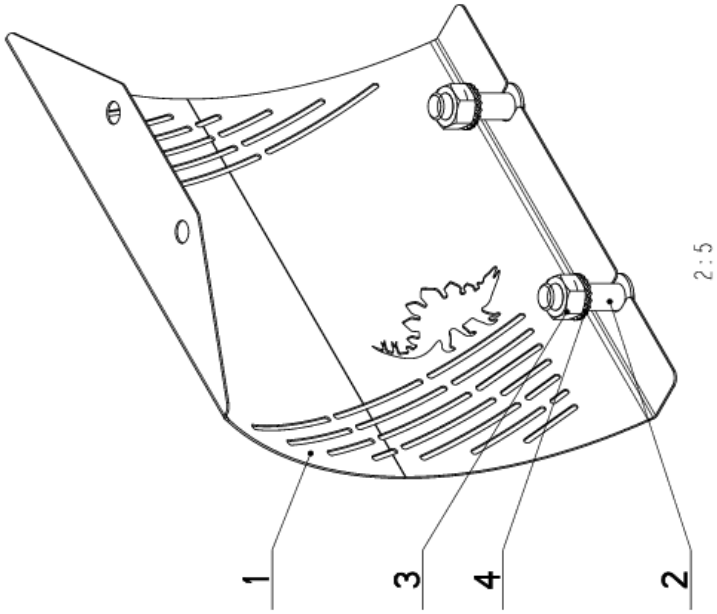

Cislo Sestavy
201.R404-022

Ver.
0

Nazev sestavy
KRYT/COVER/ABDECKUNG

Poz.	Objednaci cislo	Ver.	Nazev polozky	Rozmer	Ks
1	30.R404-023	0	PLECH / PLATE / BLECH	P1x238	1
2	90.013.27.29	0	SROUB / BOLT / SCHRAUBE	M12X40_ISO_7380	2
3	90.100.55.007	0	MATICE / NUT / MUTTER	MATICE _ M12	2
4	90.152.50.006	0	PODLOZKA / WASHER / UNTERLEGSCHEIBE	M12 DIN6798	2

Cislo Sestavy/Number of assembly/Nummer der Baugruppe; Verze (Ver.)/Version/Version; Nazev sestavy/Assembly title/Name der Baugruppe; Pozice (Poz.)/Position/Position;
Objednaci cislo/Purchase order number/Bestellnummer; Nazev polozky/Volume title/Name der Position; Rozmer/Stock size/Abmessung

7.27. 201.M305-000
Převodovka / Transmission / Getriebe

Cislo Sestavy 201.M305-000 | Ver. 1 | Nazev sestavy PREVODOVKA/TRANSMISSION /GETRIEBE

Poz.	Objednaci cislo	Ver.	Nazev polozky	Rozmer	Ks
1	30.1804-010	0	PODLOZKA / WASHER / UNTERLEGSCHEIBE	d 70	1
2	30.2904-005	0	DISTANC / DISTANCE / DISTANZ	TR 55x8	1
3	30.2904-006	0	PERO / SPRING / FEDER	HR 14x14	1
4	30.2908-001	1	PODLOZKA / WASHER / UNTERLEGSCHEIBE	d 50	1
5	30.M305-003	2	HRIDEL / SHAFT / WELLE	d 65	1
6	30.M305-005	0	PRIRUBA / FLANGE / FLANSCHE	ODLITEK	1
7	30.M305-008	0	PERO / SPRING / FEDER	HR 10x8	1
8	90.005.55.025	0	SROUB 6HRANNY / 6 SIDED BOLT / SECHSKANTSCHRAUBE	SROUB M10X30	8
9	90.005.55.035	0	SROUB 6HRANNY / 6 SIDED BOLT / SECHSKANTSCHRAUBE	SROUB M12X45	8
10	90.011.27.025	0	ZAPUSTNY IMBUS / COUNTERSINK BOLT / SENKSCHRAUBE	SROUB M12X25	1
11	90.011.27.036 (1)	0	ZAPUSTNY IMBUS / COUNTERSINK BOLT / SENKSCHRAUBE	SROUB M10X25	1
12	90.150.50.006	0	PODLOZKA / WASHER / UNTERLEGSCHEIBE	PODLOZKA 10,5	8
13	95.001.027	0	LOZISKO / BEARING / LAGER	6309 2RS	2
14	99.001.129	0	PREVODOVKA SNEKOVA / WORM GEAR TRANSMISSION / SCHNECKENGETRIEBE		1

1.ZRUS.1xSROUB M12x25(90.011.27.025) A NAHR.1xSROUBEM M10x25(90.011.27.036). 110/ZM112 25.6.2012 SLEZACKOVA

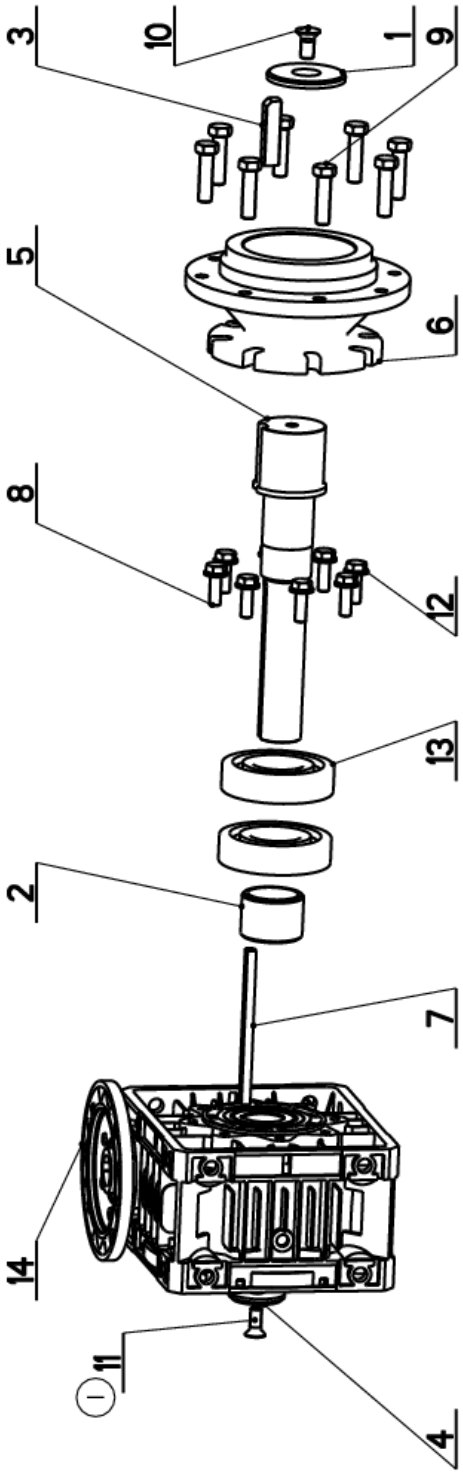

Cislo Sestavy/Number of assembly/Nummer der Baugruppe; Verze (Ver.)/Version/Version; Nazev sestavy/Assembly title/Name der Baugruppe; Pozice (Poz.)/Position/Position;
Objednaci cislo/Purchase order number/Bestellnummer; Nazev polozky/Volume title/Name der Position; Rozmer/Stock size/Abmessung

7.28. 201.R305-500
Pohon/ Drive/ Antrieb
Proline 420.350 Hsx

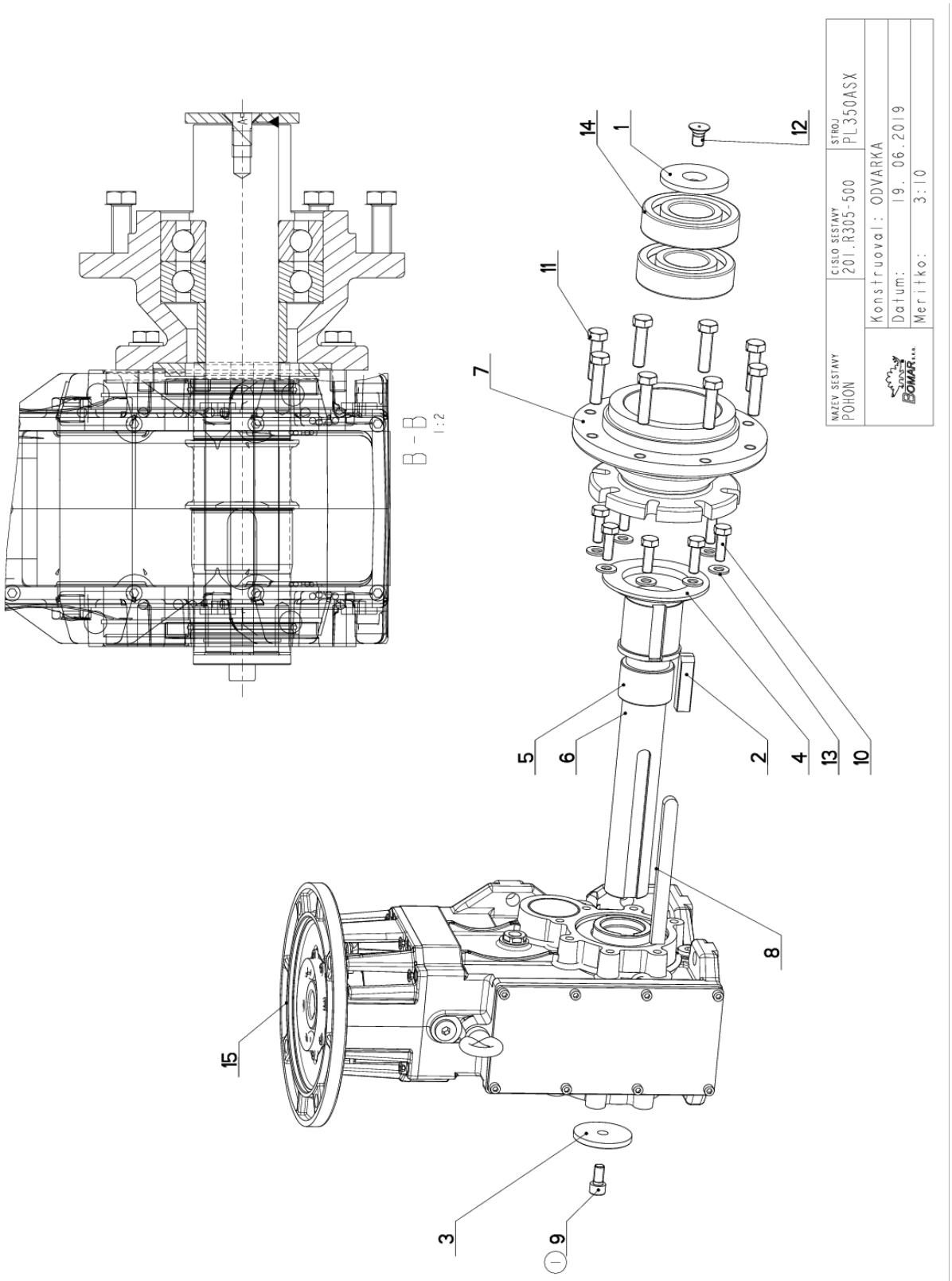

7.28.1. 201.R305-500

Kusovník / Piece list / Stückliste -
Pohon/ Drive/ Antrieb
Proline 420.350 Hsx

Cislo Sestavy	Ver.	Nazev sestavy
201.R305-500	1	POHON/TRANSMISSION /GETRIEBE

Poz.	Objednaci cislo	Ver.	Nazev polozky	Rozmer	Ks
1	30.1804-010	0	PODLOZKA / WASHER / UNTERLEGSCHEIBE	P 6x70	1
2	30.2904-006	0	PERO / SPRING / FEDER	HR 14x14	1
3	30.7901-018	1	PODLOZKA / WASHER / UNTERLEGSCHEIBE	P8x60	1
4	30.R305-501	0	REDUKCE / REDUCTION / ADAPTOR / REDUKTION	d 120	1
5	30.R305-502	0	DISTANC / DISTANCE / DISTANZ	TR 55x8	1
6	30.R305-503	1	HRIDEL / SHAFT / WELLE	d 65	1
7	30.R305-505	0	PRIRUBA / FLANGE / FLANSCHE	ODLITEK	1
8	30.Y605-002	0	PERO / SPRING / FEDER	HR.14x9	1
9	90.001.25.046 (1)	0	SROUB IMBUS / ALLEN HEAD BOLT / IMBUSSCHRAUBE	M10X20	1
10	90.005.55.025	0	SROUB 6HRANNY / 6 SIDED BOLT / SECHSKANTSCHRAUBE	SROUB M10X30	8
11	90.005.55.035	0	SROUB 6HRANNY / 6 SIDED BOLT / SECHSKANTSCHRAUBE	SROUB M12X45	8
12	90.011.27.009	0	ZAPUSTNY IMBUS / COUNTERSINK BOLT / SENKSCHRAUBE	SROUB M12X20	1
13	90.150.50.006	0	PODLOZKA / WASHER / UNTERLEGSCHEIBE	PODLOZKA 10,5	8
14	95.001.027	0	LOZISKO / BEARING / LAGER	6309 2RS	2
15	99.003.028	0	PREVODOVKA KUZELOCEL / CONICAL TRANSMISSION / KEGELRADGETRIEBE	MBH80C PAM112	1

1.ZRUS. SROUB ZAPUSTNY M10x20 90.011.27.008 A NAHR. SROUBEM M10x20 90.001.25.046. 189/259 19.6.2019 SZABARI

Cislo Sestavy/Number of assembly/Nummer der Baugruppe; Verze (Ver.)/Version/Version; Nazev sestavy/Assembly title/Name der Baugruppe; Pozice (Poz.)/Position/Position;
Objednaci cislo/Purchase order number/Bestellnummer; Nazev polozky/Volume title/Name der Position; Rozmer/Stock size/Abmessung

7.29. Volitelné příslušenství

7.29.1. 201.R314-100
Horní upínání/ Top clamping/ obere Klemm

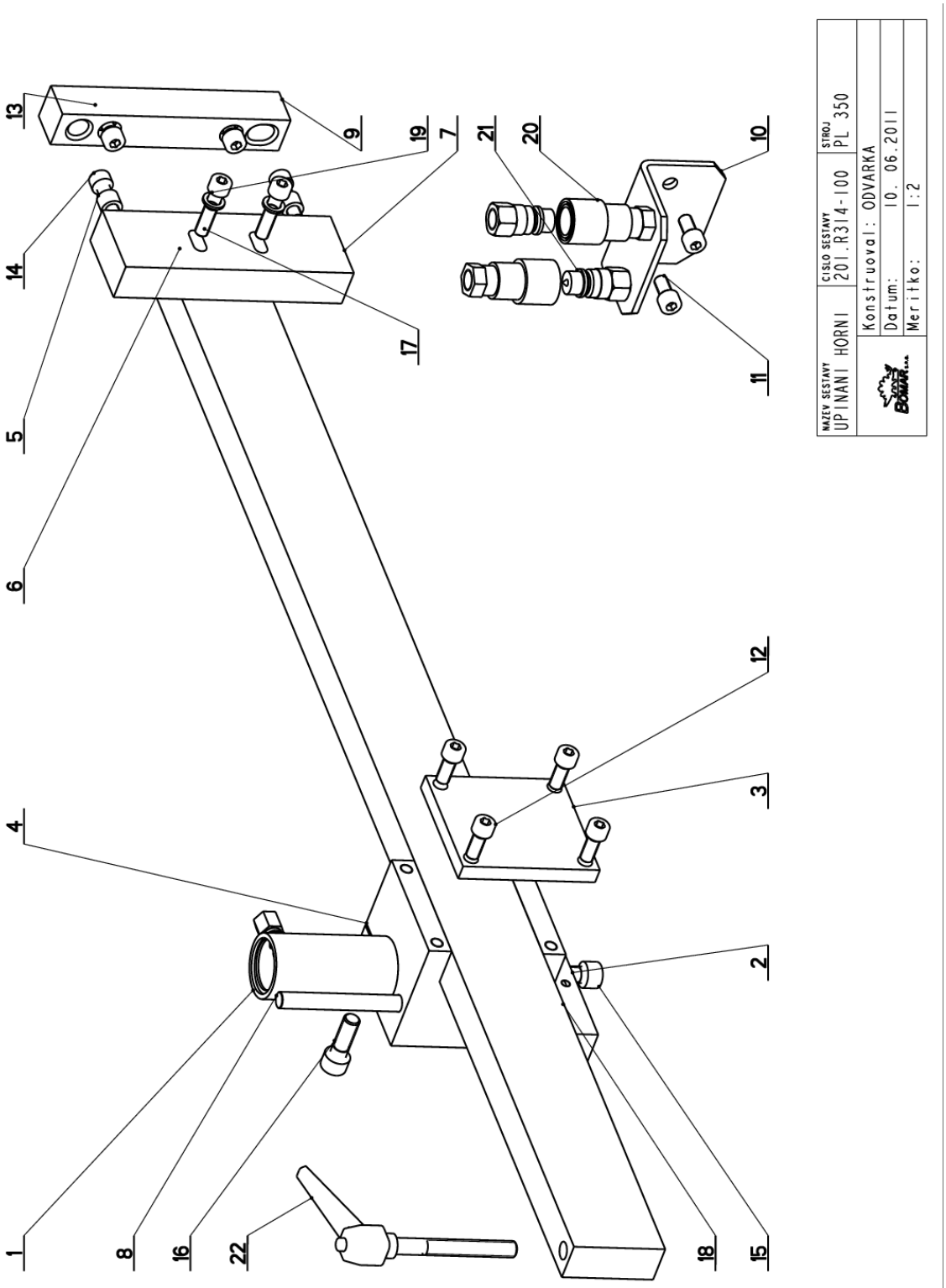

7.29.2. 201.R314-100

Kusovník / Piece list / Stückliste - Horní upínání/ Top clamping/ obere Klemm

Cislo Sestavy	Ver.	Nazev sestavy
201.R314-100	0	UPINANI HORNI/TOP CLAM/SPANNVORRICHTUNG OBEN

Poz.	Objednaci cislo	Ver.	Nazev polozky	Rozmer	Ks
1	201.R307-500	0	VALEC POMOCNY / AUXILIARY CYLINDER / HILFSZYLINDER		1
2	30.R214-103	0	DESKA / BOARD / PLATTE	HR 40x15	1
3	30.R214-104	0	DESKA / BOARD / PLATTE	HR 80x10	1
4	30.R214-105	0	KOSTKA / CUBE / WÜRFEL	HR 80x80	1
5	30.R214-107	0	KROUZEK DISTANCNI / LUG / BOLZEN	d 13	2
6	30.R314-101	0	LISTA VODICI / LEAD TRIM / FÜHRUNGSLEISTE	HR 60x25	1
7	30.R314-102	0	DRZAK / LEAD TRIM / FÜHRUNGSLEISTE	HR 50x25	1
8	30.R314-103	0	TYC / POLE / STANGE	D10	1
9	30.R314-104	0	DESKA / LEAD TRIM / FÜHRUNGSLEISTE	HR 25x25	1
10	30.R314-108	0	PLECH / PLATE / BLECH	P 4x80	1
11	90.001.25.031	0	SROUB IMBUS / ALLEN HEAD BOLT / IMBUSSCHRAUBE	8x16	2
12	90.001.25.032	0	SROUB IMBUS / ALLEN HEAD BOLT / IMBUSSCHRAUBE	8x20	4
13	90.001.25.033	0	SROUB IMBUS / ALLEN HEAD BOLT / IMBUSSCHRAUBE	8x25	2
14	90.001.25.034	0	SROUB IMBUS / ALLEN HEAD BOLT / IMBUSSCHRAUBE	M8X30	2
15	90.001.25.045	0	SROUB IMBUS / ALLEN HEAD BOLT / IMBUSSCHRAUBE	M10X16	1
16	90.001.25.048	0	SROUB IMBUS / ALLEN HEAD BOLT / IMBUSSCHRAUBE	M10X30	1
17	90.001.55.035	0	SROUB IMBUS / ALLEN HEAD BOLT / IMBUSSCHRAUBE	M8X35	2
18	90.002.2D.008	0	SROUB STAVECI / ADJUSTMENT BOLT / STELLSCHRAUBE	SROUB M6X16	1
19	90.163.00.002	0	PODLOZKA / WASHER / UNTERLEGSCHEIBE	PODLOZKA 8	2
20	92.060.007	0	RYCHLOSPOJKA / QUICK CONNECT / SCHNELLKUPPLUNG	6 GI/4"	2
21	92.060.008	0	RYCHLOSPOJKA / QUICK CONNECT / SCHNELLKUPPLUNG	6 GI/4"	2
22	94.008.007	0	PAKA UPINACI / ATTACHMENT LEVER / SPANNHEBEL	M10	1

Cislo Sestavy/Number of assembly/Nummer der Baugruppe; Verze (Ver.)/Version/Version; Nazev sestavy/Assembly title/Name der Baugruppe; Pozice (Poz.)/Position/Position; Objednaci cislo/Purchase order number/Bestellnummer; Nazev polozky/Volume title/Name der Position; Rozmer/Stock size/Abmessung

7.29.3. 201.R314-400
Horní upínání/ Top clamping/ obere Klemm

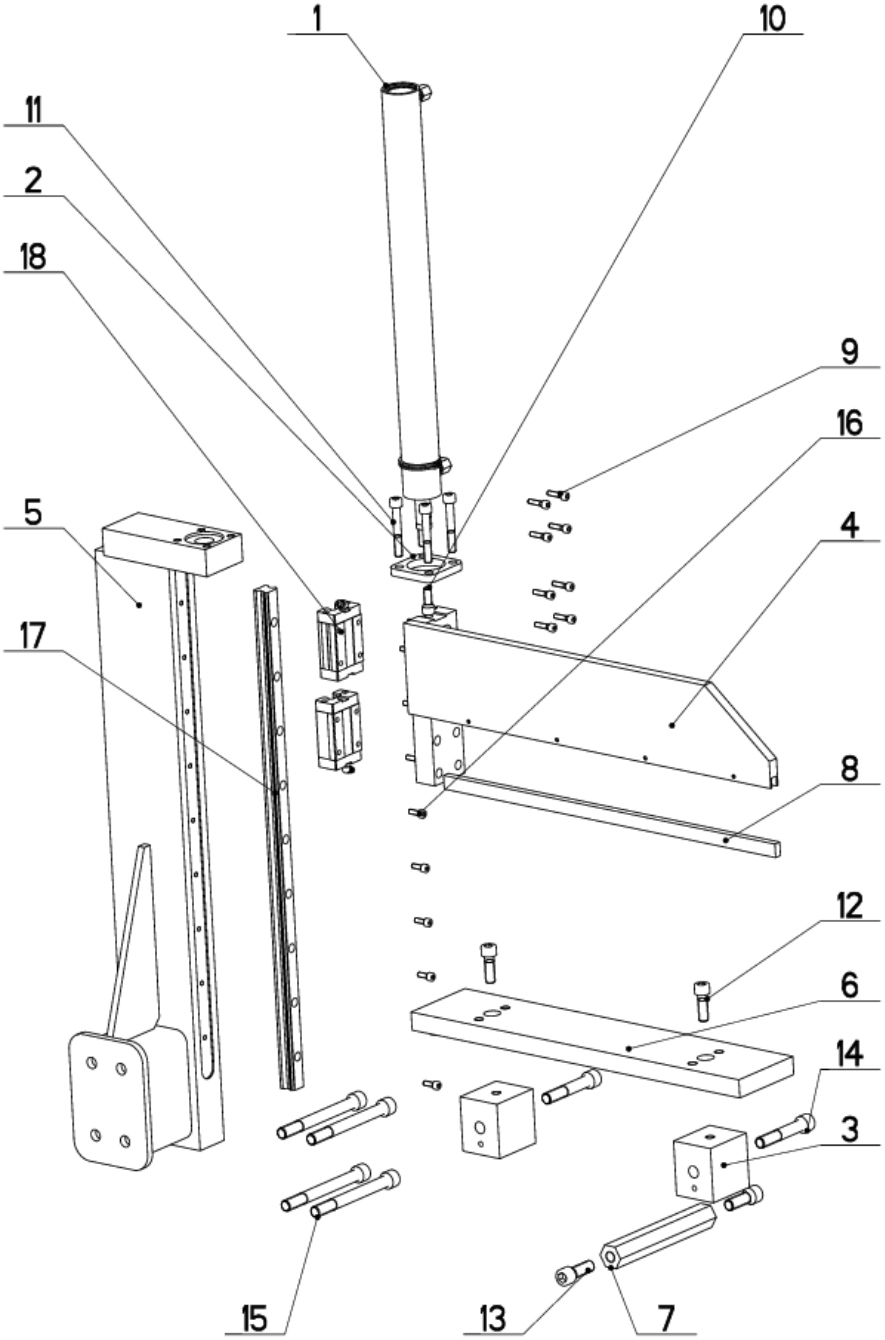

NAZEV SESTAVY	CISLO SESTAVY	STROJ
UPINANI HORNI	201.R314-400	PROLINE 350

BOMAR	Konstruoval: ODVARKA
	Datum: 12. 12.2016
	Meritko: 1:100

7.29.4. 201.R314-400

Kusovník / Piece list / Stückliste - Horní upínání/ Top clamping/ obere Klemm

Cislo Sestavy	Ver.	Nazev sestavy
201.R314-400	0	UPINANI HORNI/TOP CLAM/SPANNVORRICHTUNG OBEN

Poz.	Objednaci cislo	Ver.	Nazev polozky	Rozmer	Ks
1	201.D307-140	0	VALEC NAPINACI / TENSIONING CYLINDER / SPANNZYLINDER	D30/16	1
2	30.D311-126	0	DRZAK / HOLDER / HALTER	P 8x58	1
3	30.R214-404	0	DESKA / BOARD / PLATTE	HR 60x60	2
4	30.R314-401	0	CELIST / JAW / BACKE		1
5	30.R314-402	0	SLOUP / POLE / SÄULE		1
6	30.R314-403	0	DESKA / BOARD / PLATTE	HR 90x20	1
7	30.R314-405	0	DESKA / BOARD / PLATTE	6HR 24	1
8	30.R314-406	0	LISTA / TRIM / LEISTE	HR 15x8	1
9	90.001.25.010	0	SROUB IMBUS / ALLEN HEAD BOLT / IMBUSSCHRAUBE	M5X20	8
10	90.001.25.032	0	SROUB IMBUS / ALLEN HEAD BOLT / IMBUSSCHRAUBE	8x20	1
11	90.001.25.039	0	SROUB IMBUS / ALLEN HEAD BOLT / IMBUSSCHRAUBE	M8X55	4
12	90.001.25.048	0	SROUB IMBUS / ALLEN HEAD BOLT / IMBUSSCHRAUBE	M10X30	2
13	90.001.25.059	0	SROUB IMBUS / ALLEN HEAD BOLT / IMBUSSCHRAUBE	M12X35	2
14	90.001.25.064	0	SROUB IMBUS / ALLEN HEAD BOLT / IMBUSSCHRAUBE	M12X70	2
15	90.001.25.066	0	SROUB IMBUS / ALLEN HEAD BOLT / IMBUSSCHRAUBE	M12X120	4
16	90.001.25.087	0	SROUB IMBUS / ALLEN HEAD BOLT / IMBUSSCHRAUBE	M5X14	9
17	99.200.297	0	VEDENI LINEARNI / LINEAR GUIDE / LINEARE FÜHRUNG	MSA20R	1
18	99.201.060	0	VOZIK LINEARNIHO VEDENI / LINEAR GUIDE CART / LINEARFUHRUNGSWAGEN	MSA20S	2

Cislo Sestavy/Number of assembly/Nummer der Baugruppe; Verze (Ver.)/Version/Version; Nazev sestavy/Assembly title/Name der Baugruppe; Pozice (Poz.)/Position/Position; Objednaci cislo/Purchase order number/Bestellnummer; Nazev polozky/Volume title/Name der Position; Rozmer/Stock size/Abmessung