Series **Transverse**

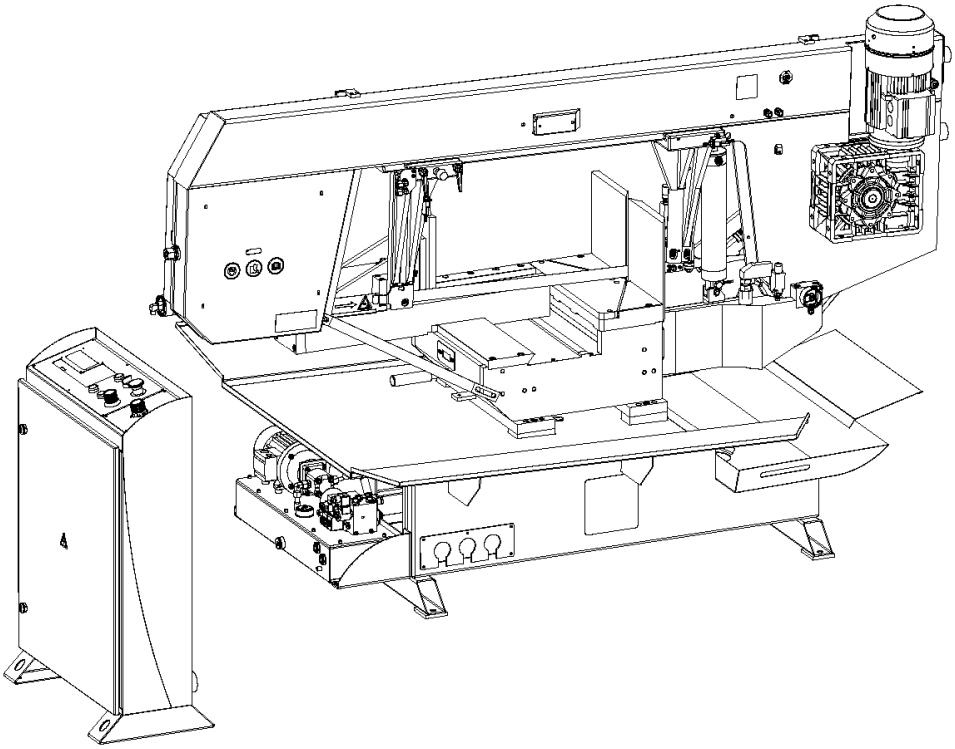

# Transverse 510.330 DGH

## Operating instructions

**Before transporting and using the machine, please read the instructions thoroughly!**

Seriové číslo / Serien Nummer / Serial Number _____

# Service and information

*Your BOMAR dealer:*

**Direct BOMAR contact:**


**BOMAR spol. s r.o.**
Těžební 1236/1
62700 Brno
Czech Republic, EU

telefon: +420 – 533 426 100
fax: +420 – 533 426 109
e-mail: info@bomar.cz
www: http://www.bomar.cz


**We are available:**

Mondays to Fridays $7^{00}$ – $16^{00}$

**Version:**

1.17 / July 2016

rev. 1


**BOMAR, spol. s r.o.** © – Subject to modifications and amendments.

# EC Declaration of Conformity

1) We:

**BOMAR, spol. s r.o.**
**Těžební 1236/1**
**627 00 Brno, Czech Republic**
Id. No: 48908827
**declare herewith**

that the following designated device based on its conception and construction as well as the design launched by us meets the relevant basic safety requirements of the decrees of the government.This statement applies exclusively to the machine device in conditions in which it was brought to the market. It does not apply to parts subsequently added by the end user or to modifications performed subsequently by the end user. In the event of any device modification not approved by us this declaration shall lose its validity

| | |
|---|---|
| **Name:** | **Band Saw** |
| **Type :** | **Transverse 510.350 DGH** |
| **Serial number:** | |
| **Manufacturer** | **BOMAR, spol. s r.o., Těžební 1236/1, 627 00 Brno** |
| **Product data** | |
| **Determination:** | for cross dividing and cutting of rolled and towed bars and profiles made of steel, stainless steel, non-ferrous metals and plastics |
| **Description:** | Stand, table, cutting unit with the arm, saw band and drive, hand clamping device, cooling system, machine control |
| | Pneumatic *NO* ☒ *YES* ☐ Hydraulic *NO* ☐ *YES* ☒ Control system *NO* ☐ *YES* ☒ |
| **Technical data:** | Cutting rate 20-120 m.min-1 |
| | Cutting angle -60° bis 60° |
| | Total dimensions in mm (l×w×h) 2355x1365x1410 |
| | Total power requirement 5,1 kVA |
| | Weight 950 kg |

**Documentation:**
Technical documentation for this machine device was elaborated in compliance with Government regulation no. 176/2008, Annex 7, part A.

**The device meets relevant requirements of the given directives:** **2006/42/ES**
**2004/108/ES**

**The applied harmonized standards, National standards and technical specifications:**

| | | |
|---|---|---|
| ČSN EN ISO 12100:2011 | ČSN EN 13898+A1:2009 | ČSN EN ISO 13857:2008 |
| ČSN EN ISO 4413:2011 | | ČSN EN 60204 -1 ed.2+A1:2009 |
| ČSN EN 55011 ed.3+A1:2011 | ČSN EN 61000-6-2 ed.3:2006 | ČSN EN 61000-6-4 ed.2+A1:2011 |

**The product is safe on condition of the common and determined usage.**

The conformity judging was performed according to §12, par. 3, let. a), of the Law no. 22/1997 Coll. as amended.
The declaration of conformity was carried out in the cooperation with the TÜV SÜD Czech s.r.o, 2) , Novodvorská 994, 142 21 Prague 4 – Czech Republic, Identification number: 63987121 - Inspection body no. 4002.

The inspection certificate no **07.489.661** was issued

BOMAR, spol. s r.o.
Těžební 1236/1, 627 00 Brno
Czech Republic
IČO: 48908827
DIČ: CZ48908827

Brno, 17.12.2015
*Point of issue, datum*

**Alfred Pichlmann, Managing Director**
*Name and function of the responsible subject, signature*

Person authorized to complete the technical documentation:: BOMAR, spol. s r. o., Těžební 1236/1, 627 00 Brno

1) Name, address and identification number of the subject issuing the conformity declaration (producer of importer)
2) The authorized or accredited body co-operating on the conformity judging

| | |
|---|---|
| ! | If the equipment is installed without safety equipment offered by BOMAR, spol. s ro or its agents and used by the customer (or buyer) then EC declaration loses validity.<br>EC Declaration of conformity is valid only if customer (buyer) installed the BOMAR safety equipment with the machine or with some other with equivalent safety device in accordance with current applicable regulations and standards.<br>All machine elements and components that were built into the device by BOMAR, spol. s ro have been declared "identical" to a safety device, as offered by BOMAR, spol. s ro or its agents. |

# Content


## 1. SAFETY NOTES....9

1.1. Machine determination....11
1.2. Protective suit and personal safety....11
1.3. Safety notes for machine operator....12
1.4. Safety notes for the servicing and repairs....12
1.5. Safety notes for the servicing and repairs on hydraulic unit....13
1.6. Safety machine accessories....13
1.6.1. Total Stop....13
1.6.2. Saw arm cover....13
1.6.3. Saw band stretching and rupture inspection....14
1.6.4. Left arm covers....14
1.6.5. Right arm cover....14
1.7. Safety notes for the cooling....14
1.7.1. Instructions for first help....15
1.8. Umístění štítku stroje / Maschinenschild position / Position of machine label....15
1.9. Umístění bezpečnostních značek / Verteilung der Sicherheitszeichen / Position of safety symbols....16

## 2. MACHINE DOCUMENTATION....17

2.1. Technická data / Technische Daten / Technical data....19
2.2. Rozměrové schéma / Aufstellzeichnung / Installation diagram....21
2.3. Popis / Beschreibung / Description....22
2.4. Transportation and stocking....23
2.4.1. Conditions for transportation and stocking....23
2.4.2. Transport and stocking preparations....23
2.4.3. Transport and stocking....23
2.5. Transportní schéma / Transport schema / Transport scheme....24
2.6. Activation....26
2.6.1. Machine working conditions....26
2.7. Band saw unpacking and assembling....26
2.7.1. Machine installing and levelling....27
2.7.2. Machine disposal after lifetime....28
2.8. First run of the power pack....29
2.8.1. Filling the reservoir with hydraulic oil....29
2.9. Kotevní plan / Verankerungsplan / Grounding plan....30
2.10. Electrical connection....31
2.10.1. Check the direction of the saw band....31
2.11. Filling of the cooling system....31
2.12. Check machine function....32
2.13. Saw band....32
2.13.1. Saw band size....32
2.13.2. Selection of the saw band tooth system....32
2.13.3. Saw band running-in....33
2.13.4. Tables for teeth selection....34

## 3. MACHINE CONTROL....35

3.1. Starting the band saw....37
3.2. Control panel....38
3.2.1. Control panel description....39
3.3. Machine setup....41
3.3.1. SERVIS....41
3.3.2. SETUP....42
3.4. Machine error messages....44
3.5. Machine control....44
3.5.1. Semi-automatic cycle....44
3.5.2. Cycle breaking....45
3.6. Band saw adjusting....46
3.6.1. Cutting speed adjusting....46
3.6.2. Speed adjustment of the arm lowering....46
3.6.3. Angular cut setting....46
3.6.4. Adjusting of the guide cubes span....47
3.6.5. Pressure adjusting to the cut....48
3.7. Material insertion....49
3.7.1. Handling agent selection....49
3.7.2. Insertion....49
3.7.3. Bundle material cutting....49

## 4. MACHINE SERVICE....51

4.1. Saw band dismantling....53
4.2. Saw band installation....54
4.3. Saw band stretching and inspection....55
4.3.1. Mechanical indicator of belt tightening....56
4.3.2. Hydraulic indicator of belt tightening (optional accessory)....57
4.4. Saw band run adjustment on stretching wheel....58

4.4.1. Saw band run inspection ... 58
4.4.2. Saw band setting ... 58
4.5. Adjusting of the limit switch of the saw band stretching ... 59
4.6. Guide cubes adjustment ... 60
4.7. Hard metal guides adjustment ... 60
4.8. Saw frame lower stop position adjustment ... 61
4.9. Limit switch of the saw frame lower position adjustment ... 61
4.10. Adjustment of the securing cube of the turning lever ... 62
4.11. Pressure switch adjustment ... 62
4.12. Pressure adjustment of the hydraulic system ... 64
4.13. Brush adjustment ... 65
4.13.1. Adjustment of the regulating pressure to the cut ... 66
4.13.2. Adjustment of a throttle valve ... 66
4.14. Cooling agents and chips disposal ... 67
4.14.1. Coolant device inspection ... 67
4.14.2. Chips disposal ... 68
4.15. Hydraulic, Greases and oils ... 68
4.15.1. Gearbox oils ... 68
4.15.2. Lubricant greases ... 69
4.15.3. Lubrication ... 69
4.15.4. Hydraulic oils ... 69
4.16. Hydraulic unit service ... 70
4.17. Hydraulic oil level check ... 71
4.18. Machine cleaning ... 71
4.19. Worn pieces replacement ... 71
4.19.1. Hard metal guides replacement ... 71
4.19.2. Pushing bearing replacement ... 73
4.19.3. Fixed bearing replacement of the saw band guiding ... 76
4.19.4. Saw band guiding pulleys replacement ... 77
4.19.5. Round brush replacement ... 79
4.19.6. Variator band replacement ... 80
4.19.7. Stretching wheel replacement ... 82
4.19.8. Driving wheel replacement ... 84
4.19.9. Cooling pump replacement ... 85

**5. ZÁVADY / TROUBLESHOOTING ... 87**

5.1. Mechanical problems ... 88
5.2. Electric problems ... 90
5.3. Hydraulic problems ... 91

**6. SCHÉMATA / SCHEMAS / SCHEMATICS ... 93**

6.1. Elektrické schema / Elektroschema / Wiring diagrams ... 95
6.1.1. 3x400V + PE (+N), 50 Hz ... 95
6.2. 3x230 V +PE, 50 Hz ... 117
6.3. Hydraulické schéma / Hydraulikschema / Hydraulic diagram ... 139

**7. VÝKRESY SESTAV PRO OBJEDNÁNÍ NÁHRADNÍCH DÍLŮ / ZEICHNUNGEN FÜR BESTELLUNG DER ERSATZTEILE / DRAWING ASSEMBLIES FOR SPARE PARTS ORDER ... 143**

7.1. Transverse 510.330 DGH ... 144
7.2. Kusovník / Piece list / Stückliste - Transverse 510.330 DGH ... 145
7.3. Podstavec / Base / Untersatz ... 146
7.4. Kusovník / Piece list / Stückliste -Podstavec / Base / Untersatz ... 147
7.5. Vana/ Tank/ Wanne ... 149
7.6. Svěrák / Vice / Schraubstock ... 150
7.7. Kusovník / Piece list / Stückliste - Svěrák / Vice / Schraubstock ... 151
7.8. Svěrák / Vice / Schraubstock ... 152
7.9. Kusovník / Piece list / Stückliste - Svěrák / Vice / Schraubstock ... 153
7.10. Válec / Roller / Zylinder ... 154
7.11. Kusovník / Piece list / Stückliste - Válec / Roller / Zylinder ... 155
7.12. Displej / Display / Display ... 156
7.13. Kusovník / Piece list / Stückliste - Displej / Display / Display ... 157
7.14. Konzola / Turnable comsol / Drehkonsole ... 158
7.15. Kusovník / Piece list / Stückliste - Konzola / Turnable comsol / Drehkonsole ... 159
7.16. Konzola / Turnable comsol / Drehkonsole ... 160
7.17. Kusovník / Piece list / Stückliste - Konzola / Turnable comsol / Drehkonsole ... 161
7.18. Odměřování / Measuring / Gehrungsmessung ... 162
7.19. Kusovník / Piece list / Stückliste - Odměřování / Measuring / Gehrungsmessung ... 163
7.20. Snímač / Sensor / Sensor ... 164
7.21. Kusovník / Piece list / Stückliste - Snímač / Sensor / Sensor ... 165
7.22. Ovladací panel / Control panel / Bedienpult ... 166
7.23. Kusovník / Piece list / Stückliste - Ovladací panel / Control panel / Bedienpult ... 167
7.24. Rameno / Shoulder / Sägerahmen ... 168
7.25. Kusovník / Piece list / Stückliste - Rameno / Shoulder / Sägerahmen ... 169
7.26. Rameno / Shoulder / Sägerahmen ... 170
7.27. Kusovník / Piece list / Stückliste - Rameno / Shoulder / Sägerahmen ... 171
7.28. Převodovka / Transmission / Getriebe ... 172
7.29. Kusovník / Piece list / Stückliste - Převodovka / Transmission / Getriebe ... 173
7.30. Napínámí / Tensioning / Spannung ... 174
7.31. Kusovník / Piece list / Stückliste - Napímámí / Tensioning / Spannung ... 175
7.32. Vedení pásu / Belt guide / Sägebandführung ... 176

7.33. Kusovník / Piece list / Stückliste - Vedení pásu / Belt guide / Sägebandführung ..... 177
7.34. Regulace přítlaku / Pressure regulation / Schnittdruckregulation ..... 178
7.35. Kusovník / Piece list / Stückliste - Regulace přítlaku / Pressure regulation / Schnittdruckregulation ..... 179
7.36. Kostka vodící / Lead cube / Führungsklotz ..... 180
7.37. Kusovník / Piece list / Stückliste - Kostka vodící / Lead cube / Führungsklotz ..... 181
7.38. Kostka vodící / Lead cube / Führungsklotz ..... 182
7.39. Kusovník / Piece list / Stückliste - Kostka vodící / Lead cube / Führungsklotz ..... 183
7.40. Kartáč / Brush / Bürste ..... 184
7.41. Kusovník / Piece list / Stückliste - Kartáč / Brush / Bürste ..... 185
7.42. Kolečko / Wheel / Rolle ..... 186
7.43. Válec zvedací / Lifting cylinder / Hebezylinder ..... 188
7.44. Kusovník / Piece list / Stückliste - Válec zvedací / Lifting cylinder / Hebezylinder ..... 189

# 1. Safety notes

The operating instructions must be read by the person, who keeps in touch with the machine before transportation, installation, using, servicing, reparation, stocking or removal!

The operating instructions include relevant information. The operator must familiarise himself with the install and operation, safety notes and machine servicing, because reliability and service life must be reached. The operating instructions must avoid risks, which are linked to work on the machine. Before transporting and using of the machine, please read the instructions thoroughly!

***Attention!***
*The operating instructions must be available at the machine!*
*Keep the operating instructions in good condition!*

## 1.1. Machine determination

The band saw **Transverse 510.330 DGH** is determined for cutting and shortening of rolled bars and drawn bars and profiles from steels, stainless steels, non-ferrous metals and plastics **with cutting angle from -60° to 60°.**

**Combustible materials are excepted for cutting!** Any other usage and operation outside this range are unauthorized and the manufacturer/supplier does not accept any responsibility for any damages resulting from such misuse. **The operator has full responsibility!**

The machine is equipped with safety and protective guarding for operator and machine protection. Nevertheless, this safety and protective guarding cannot prevent injury. Service personnel must read this chapter and comprehend it, before he starts to work on the machine. **Always keep instructions about work safety!** Service personnel must take into account other aspects of the risk, which refer to the ambient conditions and the material.

***Attention!***
*Consider the safety signs on the machine. Do not remove or damage them!*

## 1.2. Protective suit and personal safety

**Wear tight fitting overalls!** Loose fitting clothes may be caught with machine parts and cause serious injury.

**Wear protective gloves!** Material cuts and saw band have sharp edges and may cause serious injuries.

***Attention!***
*Gloves you can use only at working material replacement (saw band)! The machine and accessories must be inactive!*
*If the machine is running, you must not wear gloves! It is dangerous, because some parts of the machine can catch gloves!*

**Wear protective shoes with non-skid soles!** The unsuitable shoes may cause balance loss and following injury. Falling work pieces may cause serious injuries too.

**Wear protective goggles!** Chips and cooling liquid may damage your eyes.

**Always wear ear protections!** Most of the machines emit up to 80 dB and may damage your hearing.

**Do not wear jewellery and always tie back long hair!** Moving machine parts can catch jewellery or loose hair and may cause serious injuries.

**Operate the machine only when you are fit enough to work.** Illnesses or injuries diminish concentration. Avoid machine work, which may compromise the safety of you and your colleagues!

## 1.3. Safety notes for machine operator

***Attention!***
*Machine can be operated by person older than 18 years!*
*Machine can be operated only person physically and mentally fit for this activity*

***Keep instructions and orders about work safety!***
*Read the operating instructions, before you start to work on the machine! Keep the operating instructions in good condition!*

Machine can be operated only by one person. Machine operator is responsible for presence of other persons by the machine.

Close covers before the machine starting and check, if the covers are not damaged. Damaged covers must be repaired or changed. Do not start the machine, if the cover is removed! Check, if the electric cables are not damaged.

- Do not hold the material for clamping to the vice and for cutting!
- Do not operate with the buttons and the switches on the control panel, when you have gloves!

***Attention!***
*Do not connect the machine to electricity if the covers are removed. Do not touch the electrical equipment.*

- For machine starting take care, that there is nobody in the working area of the machine (it means in the working area of the vice, the saw band, the saw arm etc.).
- In no circumstances touch the rotating elements.
- Work on the machine only when the machine is in good condition!
- Check at least once in a shift, if the machine is not damaged. If the machine is damaged, you must bring the machine in order and you must inform your superior!
- Keep your working area clean! Ensure sufficient lighting in the working area.
- Take off the spilt water or the oil from the floor and dry it. Do not touch the cooling liquid with bare hands! Do not set the nozzle of the cooling liquid, when the machine is started on
- Do not remove the chips from the working area of the machine, when the machine is started on!
- Do not use the compressed air for the machine cleaning or for the chips removing!
- Use the protective instruments for chips removal!

## 1.4. Safety notes for the servicing and repairs

***Attention!***
*Only a qualified professional can carry out the servicing and repairs of the electric equipment! Take special care during the work with electrical equipment. High voltage shock can have fatal consequences! Always keep notes about work safety! Otherwise, there is possibility of heavy injury!*

Switch off the main switch and lock it, before you start service work! Otherwise, there is possibility of hazardous machine starting.

Only qualified person can do the servicing and repairs. For parts changing, use only parts, which are identical with the originals. Otherwise, there is possibility of health hazard. Use only recommended type of the hydraulic oils and oils and lubricants!

Do not remove or do not lock the limit switches or safety equipments! Any use of the saw, accessories or machine parts other than that intended by the BOMAR, spol. s r.o. company is not permitted. The guarantee on this product will be afterward lost and BOMAR, spol. s r.o. takes no responsibility for caused damages.

## 1.5. Safety notes for the servicing and repairs on hydraulic unit

Compliance with the the principles of cleanliness is basic requirement for trouble-free operation of hydraulic equipment. Hydraulic components are products made with high accuracy, and any contamination leads to a reduction lifetime or even malfunction. The consequences are very difficult to remove and expensive.

Always use clean tools. Parts and fasteners, which are part of a hydraulic circuit, never put away the dirty surface. The best cleaning agent is crepe paper, because the fibers of the cleaning cloths can also cause malfunction.

Protective cap from the threaded chamber remove just before the assembly of the unit.

Hoses and pipes before mounting flush with gasoline or other cleaning agent and blow compressed air.

All fittings must be properly tightened. However, do not raw power.

## 1.6. Safety machine accessories

The machine is equipped with safety accessories. It protects the operator from injuries and the machine before damage. The safety accessories are blocking accessories, emergency switches and covers. Check once in a week the function of the safety accessories. If the safety accessories are functionless, you must stop work and repair or change the safety accessories.

***Enhanced risk!***
*Do not come into or intervene in the cutting area. Otherwise, there is possibility of heavy injury.*

### 1.6.1. Total Stop

**TOTAL STOP** button is used for emergency switching – off the machine in case defect or health hazard. By pressing **TOTAL STOP** button is interrupted the supply of the electrical power.

**If any damages or fault appears, immediately press TOTAL STOP button!** Release the pressing button is possible by twisting of the upper part of the button.

### 1.6.2. Saw arm cover

If the cover is opened during operation, the limit switch is opened and the band saw is stopped. The band saw is not possible to start in set mode

The band saw is stated to the operation, when the cover is closed!

### 1.6.3. Saw band stretching and rupture inspection

This device checks the saw band tension and causes immediate machine stop if the band incidentally ruptures

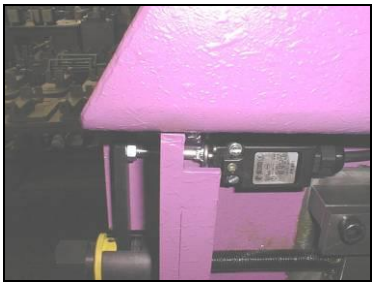

The device includes a limit switch. Its adjustment is described in chapter „Servicing and adjusting". Check the switch carefully and periodically – adjust it if necessary

### 1.6.4. Left arm covers

**Left cover** – It covers tightening wheel. If the cover is opened during operation, the limit switch is opened and the band saw is stopped. The band saw is not possible start in set mode.

### 1.6.5. Right arm cover

**Right cover –** It covers driving wheel. If the cover is opened during operation, the limit switch is opened and the band saw is stopped. The band saw is not possible start in set mode.

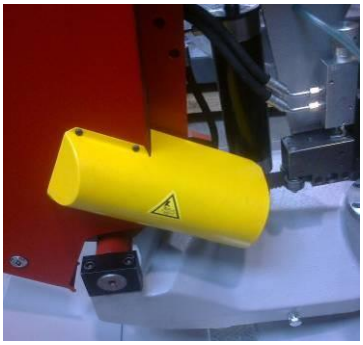

## 1.7. Safety notes for the cooling

***Attention!***

- *When handling cooling agents always wear hazardous fluid-proof gloves!*
- *Wear protective goggles!*
- *Cooling liquid can get in contact with your eyes and may cause permanent severe injuries*

### 1.7.1. Instructions for first help

1. Pull off and safely remove polluted, soaked clothing.
2. For breathing, go out in the fresh air or look for first aid treatment.
3. Wash with water or use crèmes for contact with the skin.
4. Flush with water for eyes and look for first aid treatment.
5. For swallowing, drink a lot of water and induce vomiting. Look for medical help.

## 1.8. Umístění štítku stroje / Maschinenschild position / Position of machine label

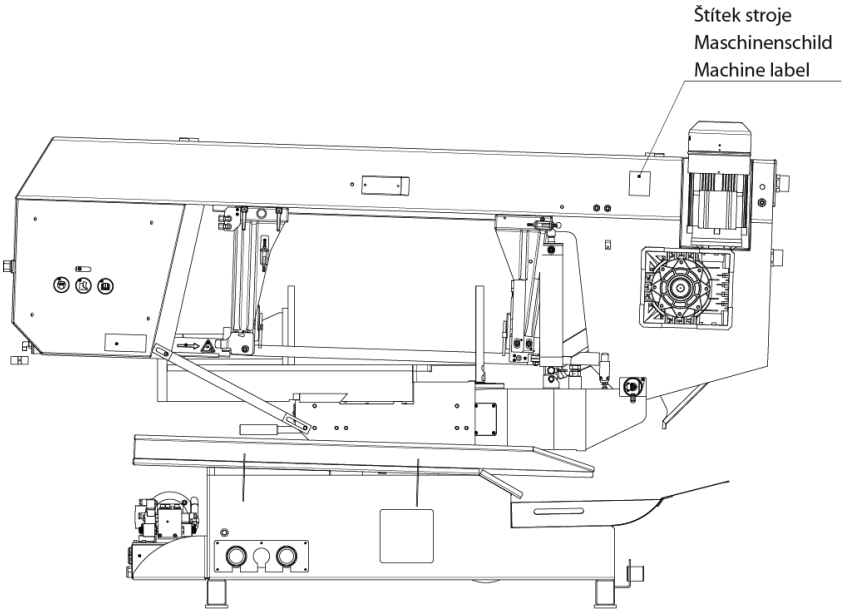


Machine label is placed on saw arm near elctromotor.

## 1.9. Umístění bezpečnostních značek / Verteilung der Sicherheitszeichen / Position of safety symbols

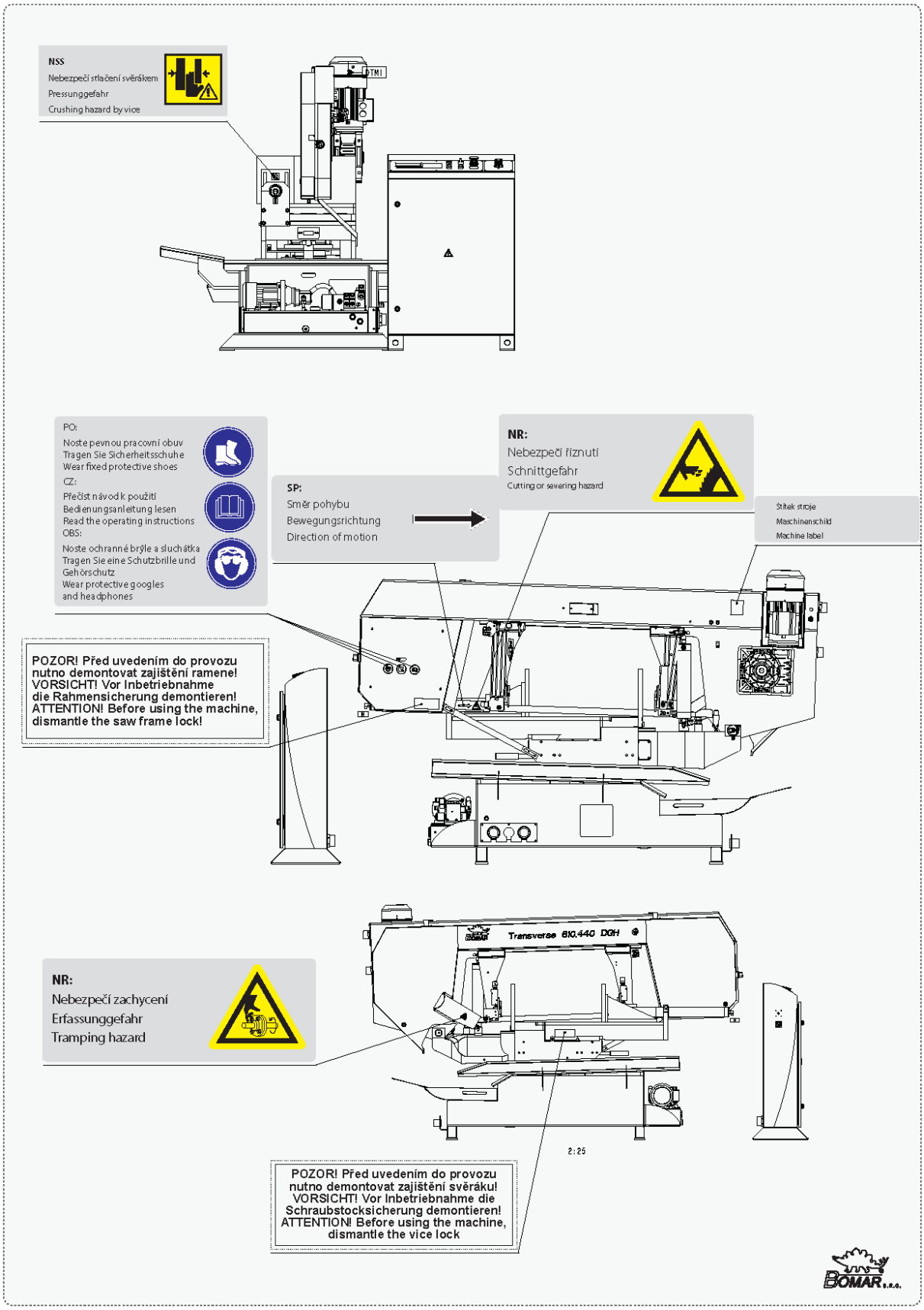

# 2. Machine documentation

## 2.1. Technická data / Technische Daten / Technical data

| | |
|---|---|
| **Hmotnost stroje / Maschinengewicht / Machine weight:** | |
| • Hmotnost / Gewicht / Weight | 950 kg |
| **Rozměry stroje / Maschinengröße / Machine size :** | |
| • Délka / Länge / Lenght | 2355 mm |
| • Šířka / Breite / Width | 1365 mm |
| • Výška / Höhe / Height | 1410mm |
| **Elektrické vybavení / Elektrische Ausrüstung / Electical equipment:** | |
| • Napájení / Versorgungsspannun / Supply voltage | ~3 x 400 V (230 V), 50Hz, TN-C-S/TN-C |
| • Příkon / Gesamptschlusswert / Total Input | 5,1kW |
| • Max.jištění / Max. Vorschaltsicherung / Max. Fuse | 16 A |
| • Krytí / Schutzart / Protection | IP 54 |
| **Akustický tlak / Schalldruckpegel / Acoustic pressure:** | |
| • Transverse 510.330 DGH | $L_{Aeqv}$=76,3 dB |
| **Pohon / Atrieb / Drive:** | |
| • Typ / Typ / Type | 1LA7107-4AA10 |
| • Napájení / Versorgungsspannun / Supply voltage | ~3 x 400V, 50Hz |
| • Výkon / Leistung / Output | 3kW |
| • Jmenovité otáčky / Motornenndrehzahl / Nominal speed | 1420 $min^{-1}$ |
| **Hydraulické zařízení / Kühlmiteleinrichtung / Hydraulic equipment:** | |
| • Typ / Typ / Type | PPM-AC0,37-P61/2,5-TM16-CB03-FR |
| • Výkon / Leistung / Output | 0,25 kW/4 MPa |
| • Jmenovité otáčky / Motornenndrehzahl / Nominal speed | 1350 $min^{-1}$ |
| **Chladící zařízení / Kühlmiteleinrichtung / Cooling equipment:** | |
| • Typ / Typ / Type | 2COP1-12HP1-4 |
| • Výkon / Leistung / Output | 0,06 kW |
| • Obsah nádrže / Volumen vom Kühlmittel / Capacity | 25 l |
| **Rozměr pásu / Sägebanddimension / Band size:** | |
| **4780×34(32)×1,1 mm** | |
| **Řezná rychlost / Schnittgeschwindigkeit / Cutting speed:** | |
| **20–120 m/min.** | |
| **Řezné rozsahy / Schnittbereiche / Cutting size:** | |

| 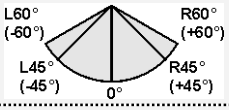 | | | 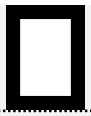 | |
|---|---|---|---|---|
| 0° | Ø345 mm | 510×345 mm | 510×345 mm | 345×345 mm |
| 45° R | Ø345 mm | 400×100 mm | 290×345 mm | 330×330 mm |
| 45° L | Ø345 mm | 400×100 mm | 370×315 mm | 315×315 mm |
| 60° R | Ø260 mm | 260×130 mm | 145×345 mm | 245×245 mm |
| 60° L | Ø260 mm | 280×120 mm | 270×180 mm | 260×260 mm |

**Level of acoustic pressure:**

Equivalent level of acoustic pressure A (noise) at operator position are $L_{Aeqv}$=76,3 dB. Mentioned values are levels of emission which doesn't have to represent safe levels. Factors which influence real level of acoustic pressure on machine operator are: working place characteristics, cut material, saw band. These factors have significantly influence on acoustic pressure.

## 2.2. Rozměrové schéma / Aufstellzeichnung / Installation diagram

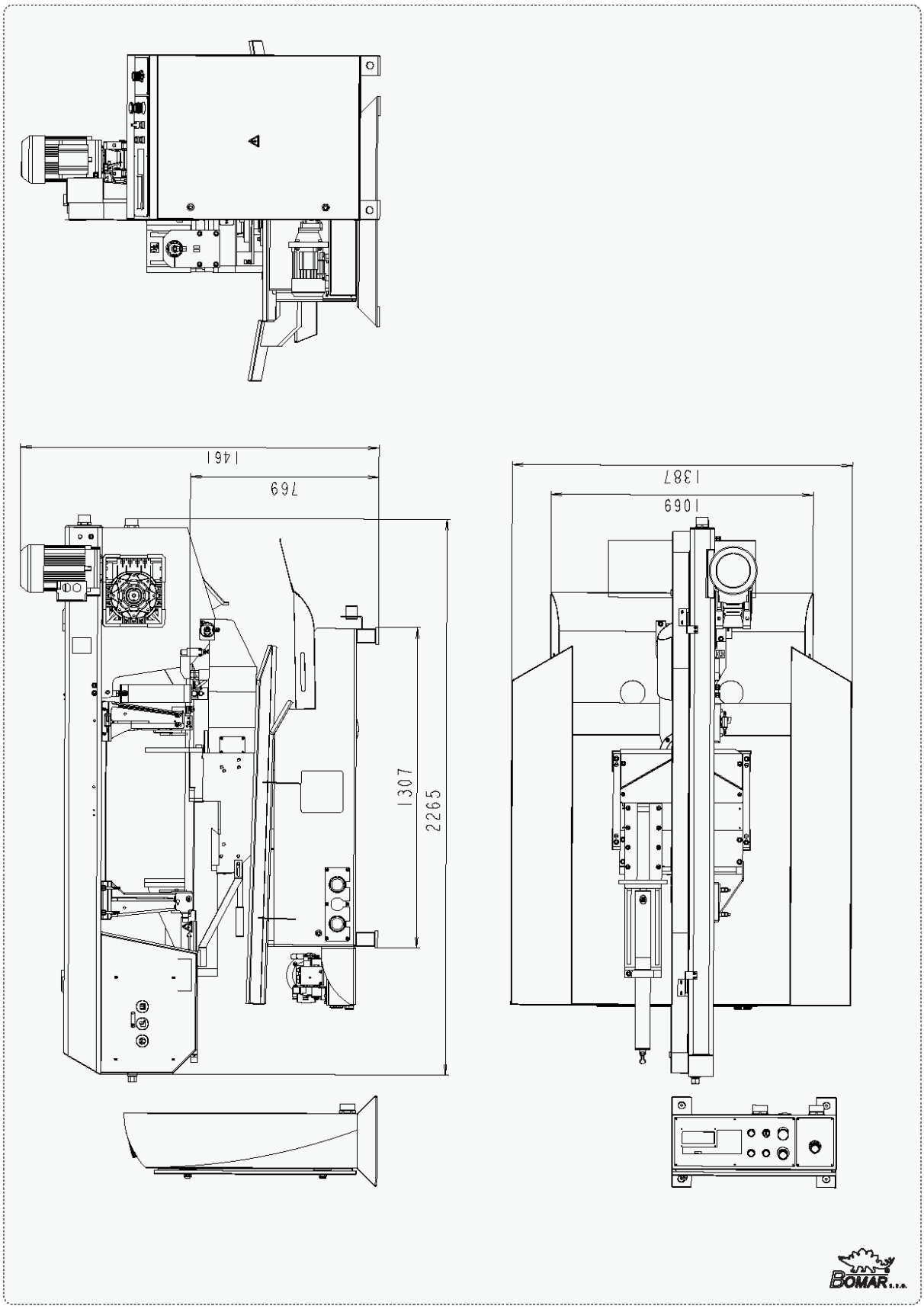

## 2.3. Popis / Beschreibung / Description

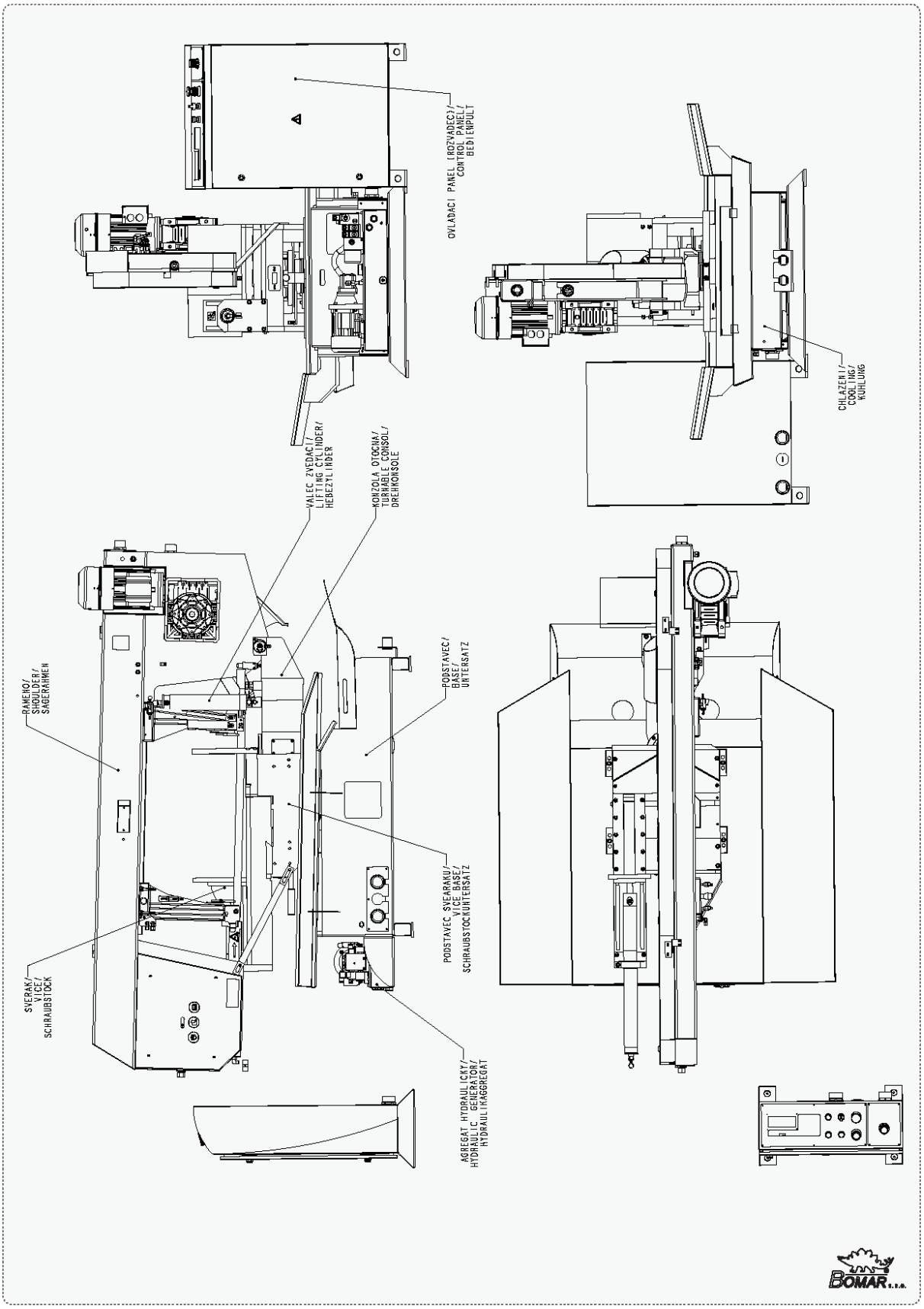

## 2.4. Transportation and stocking

### 2.4.1. Conditions for transportation and stocking

Keep recommendations for the manufacturers for transportation and stocking! If the recommendations are not kept, damage can occur to the machine.

- Don't use a forklift truck for handling the machine, if you do not have license for it!
- Don't move under suspended loads! Fault in lifting device may cause serious injury.
- Keep a safe distance from the machine during the transport.
- Temperature of the air from ***-25°C to 55°C***, for a *short term* (max. 24 hours) temperature of the air until *70°C*
- Do not expose the machine to radiation (for example microwave radiation, ultraviolet radiation, laser radiation, x-ray radiation). Radiation can cause problems with the machine function and deteriorating condition of the isolation.
- Take measures, to prevent damage by dampness, by vibrations and by shakes.

### 2.4.2. Transport and stocking preparations

Close the vice and thoroughly oil all blank surfaces.

Lower the saw frame to the lowest position.

Make sure to empty the machine of all traces of the cooling agent.

Fasten all loose parts securely to the machine.

Pack and wrap the control desk securely to avoid damage during transport.

Fix the stickers stating the minimum approximate machine weight to at least five well visible places.

### 2.4.3. Transport and stocking

Handle the machine only with the hand pallet truck or the forklift truck! Use the lifters of the truck according to the schema (num. 1). If the hand pallet truck or the forklift truck is not available it is possible to use suspension cables and the crane. The machine is equipped with screw threads M20 for fixing the shackles (num. 2). Use only shackles with appropriate capacity.

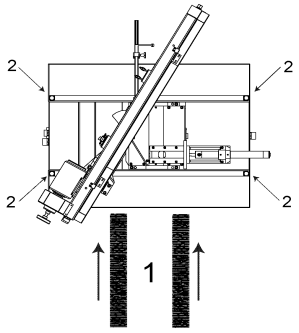


- Make sure that the hand pallet truck; the forklift truck or the crane and the suspension cables had sufficient capacity.
- Make sure that the van or the trailer had sufficient capacity.
- The machine must be secured during transportation.
- Screw on the palette to the floor of the van or the trailer.
- Be careful that the machine is not damaged during transportationThe machine must be secured during transportation...

It is forbidden to handle the machine any other way (for example by, lifting by the saw frame of the band saw), than it is written in this operating instructions, the machine can be damaged!

## 2.5. Transportní schéma / Transport schema / Transport scheme

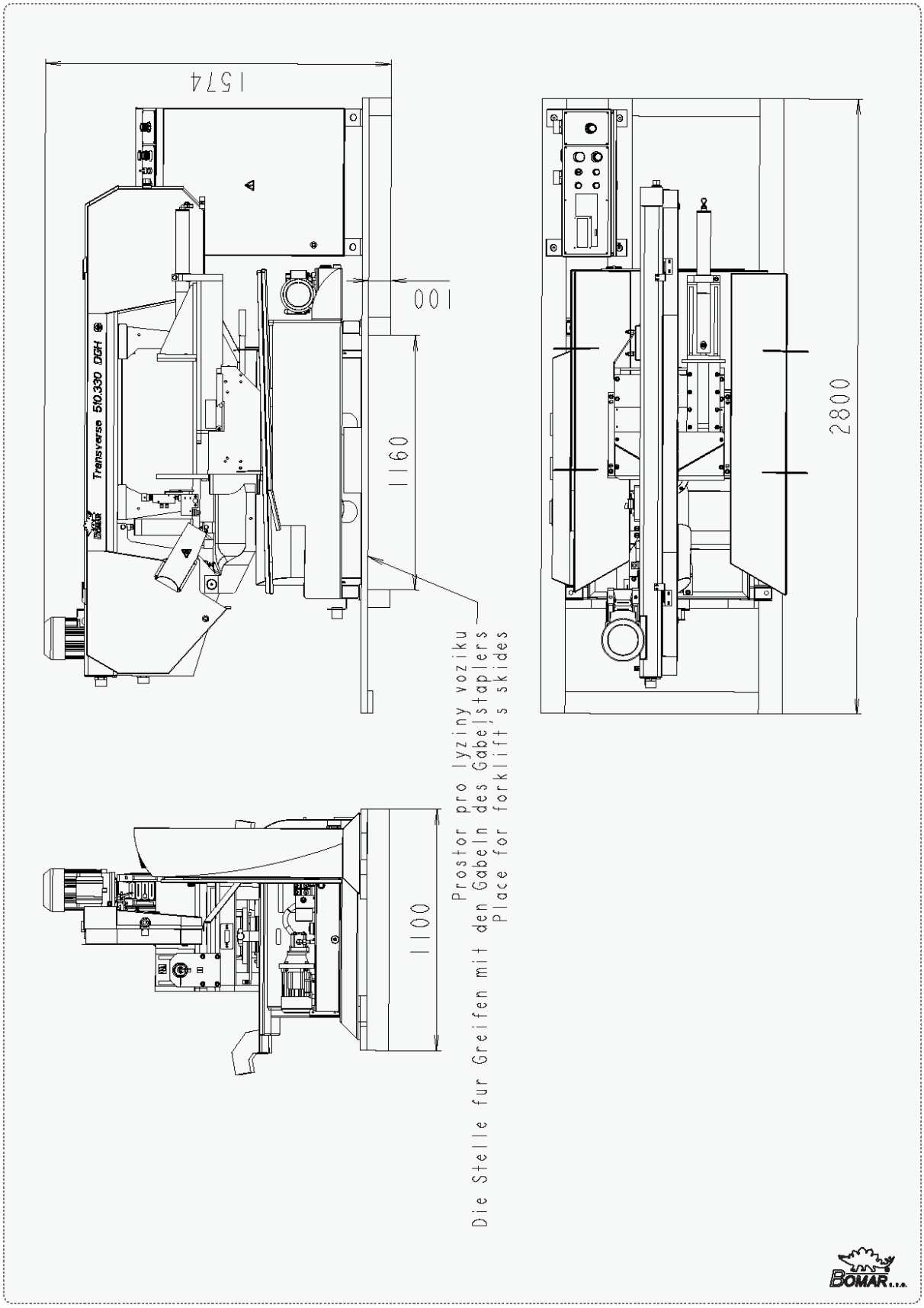
1574
Transverse 510.330 DGH
100
1160
2800
1100
Prostor pro lyziny vozíku
Die Stelle fur Greifen mit den Gabeln des Gabelstaplers
Place for forklift's skides
BOMAR s.r.o.

## 2.6. Activation

### 2.6.1. Machine working conditions

Keep the conditions of the manufacturer for machine operating! If recommendations are not kept, damage can occur to the machine.

**The manufacturer warrants the correct function of the machine for these conditions:**

- At temperature air from ***10°C to 40°C***, the temperature average during 24 hours must ***not exceed over 35°C***.
- At relative dampness of the air in the extend from 30% to 95% (not concentrate)
- Altitude lower than 1000 metres.

***Attention!***
*If the ambient temperature drops below 15 ˚ C is required before operating the machine to have switch on hydraulic unit around 10 minutes and then made several motion few times (for example, in manual mode) by all hydraulic cylinders. The reason is to heat hydraulic oil to the operating temperature for proper function of the pressure switches (and choke).*

- Do not expose the machine to the radiation (for example microwave radiation, ultra-violet radiation, laser radiation, x-ray radiation). Radiation can cause problems with the machine function and deteriorating condition of the isolation.

## 2.7. Band saw unpacking and assembling

Remove the packing from the machine and unpack all parts.

***Attention!***
*Switch off the main switch and lock it, before you start assembly! Otherwise, there is possibility of hazardous machine starting.*

If the hydraulic unit is outside the machine (the machine only connected hoses and cables), it needs to be placed and mounted on a solid basis (floors, etc.). The mounting holes are used on the bottom (bases) of the tank.

| Picture | Description |
|---|---|

| Picture | Description |
|---|---|
| 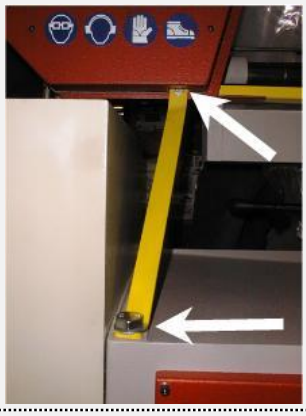 | **Saw frame blocking**<br>Dismantle the saw frame blocking from the machine before band saw operation.<br>***Remark:*** Store the holder and screws! Install the saw frame blocking on the machine for band saw displacement! You can avoid the saw frame damage |
| 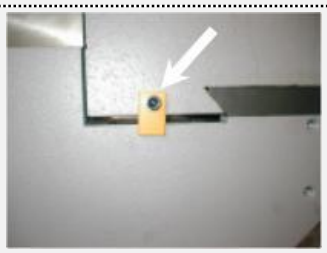 | **Vice blocking**<br>Dismantle the vice blocking from the machine before band saw operation.<br>***Remark:*** Store the holder and screw! Install the vice blocking on the machine for band saw displacement! You can avoid the vice damage. |
| | **Assembly of the draining metal plate**<br>Position the draining metal plate to the pedestal. |
| 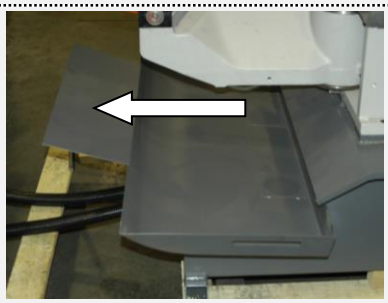 | Put the dripping board on the tank. |

## 2.7.1. Machine installing and levelling

Check the floor supporting capacity before machine installing. If the floor capacity does not agree with requirements, you must prepare the necessary base for the machine.

**Minimal requirement:**

machine weight – **Transverse 510.330 DGH – 950 kg**

+ weight of accessories

+ maximum weight of material

- The machine must be levelled at the horizontal position. All feet of the machine must touch with the floor after levelling
- The machine must be levelled by means of the calibrated spirit level. Spirit level is put on the vice area. Set the roller conveyors according to the spirit level.

- For machine levelling, take care that there is sufficient available space for operation, repair work, servicing of the machine and handling the material..
- The machine including appended parts and accessories must be visible from the place of operation.



### 2.7.2. Machine disposal after lifetime

Blown out all service fluids (cooling liquid, hydraulic oil) into designated reservoir. Dismantle machine into separate parts and dispose them in accordance with valid directives.

## 2.8. First run of the power pack

***Attention!***
*When you connect the machine to the electrical network observe correct connection of all phases!*
*ENGINE IN IN HYDRAULIC AGGREGATE CANNOT BE OPERATED WITH REVERSE TURNING MORE THEN 10 SECONDS!!!*

**Before the first run check:**

- The direction of the Pump, while run the power pack for max. 2seconds.
- The cooling fan of the motor has to rotate in the same direction as the arrow on the top of the motor cowling indicates.
- In case of wrong rotational direction, the electrical phase in the connection box is to be changed. This check is required after every disconnection from the power source
- Wiring matches with electrical and hydraulic diagrams
- the electric motors (pump and cooler) are properly connected and have the prescribed rotation
- the hydraulic accumulator with nitrogen gas to the specified value
- aux. elements work right (thermometer, level gauge, heater)

**First run (Attention – working pressure on securing valve is set by producer in accoring the hydraulic diagram):**

- In the short intervals activate an electric pump
- check for leaks and noise
- Bleed the hydraulic circuit
- if possible, test the circuit function with minimum load
- test the electrical equipment
- during operation monitor measuring equipment, noise, height and temperature of oil in the tank
- During this time a careful bleeding off for the whole hydraulic system is necessary. In case there is no bleeder port, the power pack will bleed itself after a while via the air breather on the tank or the return line filter.

After multiple start-up

### 2.8.1. Filling the reservoir with hydraulic oil

Oil regulations and recommendations of the manufacturer in the technical documentation (appendix) are to be carefully observed. For standard power packs we recommend the oiltype OH-HM32 (DIN 51524) of all known oil manufacturers.

Power packs have to be filled up with clean, pre-filtered oil! The purity of the hydraulic fluid must correspond to the class 10 NAS 1638 (reachable with filter ß =75)!

Filling from container, such as barrels, backets, etc. is not recommended or permitted!

The maximum oil level will be shown on the upper marking at the dipstick or the sight level glass. Overfilling has to be prevent. The maximum filling rate of 15 l/min shouldn´t be exceed.

| Oil type | Kinematic viscosity v in $mm^2/s$ in relationship to the fluid temperatur | | | | | Freezing point |
|---|---|---|---|---|---|---|
| | 0°C | 20°C | 40°C | 60°C | 80°C | °C |
| OH-HM 32 | 220 | 100 | 32 | 15 | 7 | -40 |
| OH-HV 32 | 180 | 67 | 32 | 17 | 11 | -40 |

## 2.9. Kotevní plan / Verankerungsplan / Grounding plan

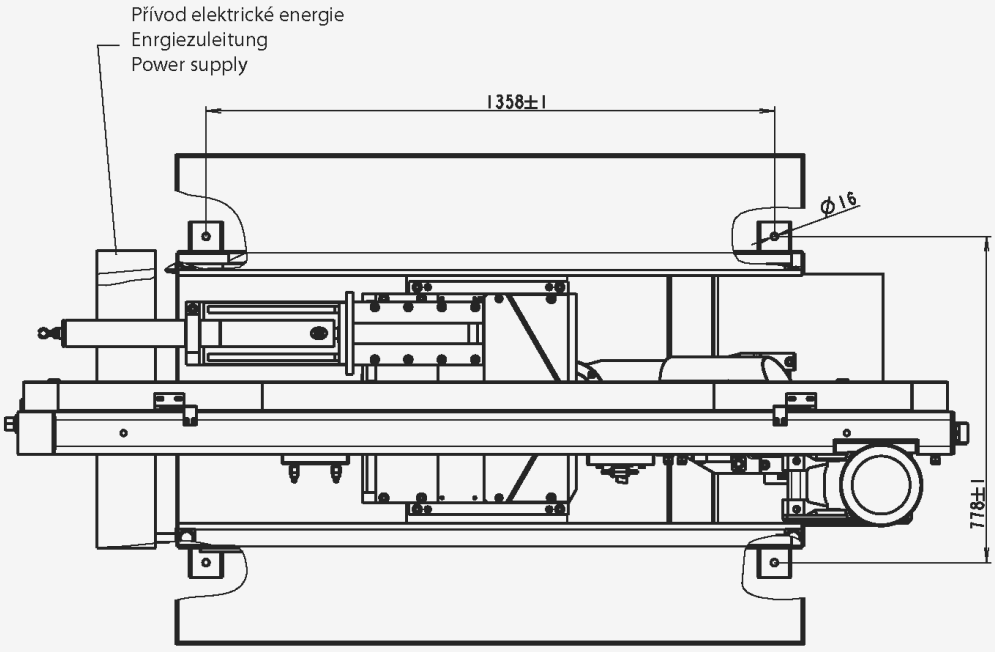


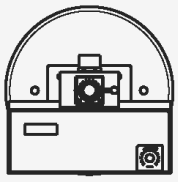

### Kotvící materiál / Verankerungsmaterial / Grouding material

- 4× Hmoždina / Dübel / Plug – ø12 mm
- Vrtáno do hloubky / In die Tiefe gebohrt / Drilled to – 100 mm
- 4× Šrouby / Schraube / Screws – M12

Šrouby podložit deskami o min. rozměrech P10×100-100
- Die Schrauben mit Platten mit Minimaldimensionen P10×100-100 unterlegen
Screew must be bottomed with plates (min. dimensions P10×100-100)

### Požadavky na rovinnost podlahy / Anforderungen an die Bodenebenheit / Requirements for floor flatness

± 10 mm / 1 m

## 2.10. Electrical connection

***Attention!***
***Only a qualified professional must carry out the servicing and repairs of the electric equipment!*** *Take special care during work with electrical equipment. High voltage shock can have fatal consequences! Always keep notes about work safety.*

**Electrical parameters of the machine:**

- Service voltage: ~ 3×400 V, ~ 3×230 V, 50 Hz, TN-C/ TN-C-S
- Total input / Max. fuse: 5,1 kW / 16 A

Before connecting switch off the main switch of the power supply circuit for the machine and ensure dry place when doing connecting works!

***Note***
*The values of the crosscut of the conductor and the rated current are in the norms.*

*Service voltage must agree with the line voltage!* Crosscut of the supply line must respond with rated current for max. machine load.

***Note***
*The socket with the fork can be used only at the machines with the rated current less than 16 A and total input less than 3 kW.*

In case the machine is connected with a direct connection, an extra main switch must be added which can be locked in zero position.

***Attention!***
*In this case the extra main switch becomes primary and the main switch on the machine has only secondary function.*

### 2.10.1. Check the direction of the saw band

After the machine has been successfully connected, briefly switch on the machine and put the driving engine of the band in the running position. The direction must be in accordance with the arrow direction on the saw band cover. In case the direction of the saw band does not match, two phases at the terminal strip must be switched.

## 2.11. Filling of the cooling system

Prepare the mixture of the water and the cooling liquid. Keep the concentration specified by manufacturer. Shift away the cover from the drainage hole. Fill the mixture of the water and the cooling liquid to the tank of the cooling system. Area of the tank for the cooling liquid is discovered from the chapter *Technical data*.

Let the drainage hole opened and with the sieve during operation, because it secures the right work of the cooling system. Filling the tank with the cooling liquid, take care that the liquid does not drip out of the tank and the tank does not overflowed.

***Note***
*If machine is equiped with microniser, fill microniser with prescribed cooling liquid. This made the Microniser ready for use.*

## 2.12. Check machine function

Check, if the machine or some parts of the machine were not damaged during transport.

Check, if covers are installed and functional. Check by means of the Tenzomat if the saw band is correctly stretched. If it is necessary, you can stretch the saw band according to chapter *Selection and replacement of the saw band*. Values of the saw band stretching are on the Tenzomat. Switch on the main switch and check the motors and systems (saw band drive, hydraulic pump, cooling pump, chips conveyor).

Open and close the main vice. Turn the saw frame of the band saw from one outer position to other outer position. Raise the saw frame to the top position and drop the saw frame to the lowest position.

Start the machine with the cooling pump and let it run without load until the cooling system will be filled with cooling liquid. As soon as the cooling liquid starts to escape from the nozzles of the cooling system, the cooling system is ready for the operation. Carry one cycle of cutting without material. Check, if the machine runs with no irregularities. If all machine functions are right, the machine is ready for operation..

## 2.13. Saw band

Refit the saw band cover only after you have installed and tightened the saw band.

### 2.13.1. Saw band size

**4780×34(32)×1,1 mm**

### 2.13.2. Selection of the saw band tooth system

The manufacturers provide the saw bands with constant and variable tooth system. The important factor for selection of the tooth system is length of the cutting canal with respect to the size of the product

1. *Constant tooth system* – the saw band has parallel tooth pitch all over length. This way is suitable for cutting of solid material.

***BOMAR recommended Variable tooth system for band saw.***

2. *Variable tooth system* – tooth pitch is variable. Variable tooth system is used for profiled materials and bundle cutting. Variable tooth pitch lowers vibration of the saw band, increases service life of the saw band and quality of the cutting area.

In tables, there are advised type of the tooth system depending on sizes and form of the cutting material.

**Footnotes:**

$Z_4$Z – teeth number on one inch S – tooth with zero angle of the teeth K – tooth with positive angle of the teeth

**Examples of the tooth system marking:**

32 S – number „32“ means 32 teeth on one inch (that means constant tooth system), letter „S“ marks teeth with zero angle of the tooth.

4–6 K – number „4–6“ means 4 till 6 teeth on one inch
(that means variable tooth system); letter „K“ marks teeth with positive angle of the teeth.

### 2.13.3. Saw band running-in

**Running-in:** Cut the material with the frame lowering reduced to 50% only. When vibrations occur increase or decrease the band speed.

When cutting small pieces run the band until approximately 300 $cm^2$ of material has been cut. When cutting large pieces run the band for 15 minutes approximately. When the band has been run, increase the lowering-speed to normal speed. The running in of the saw band avoids micro-breaks on the cutting edges of new saw band ensuing from first excessive stress. This would decrease service life substantially. The optimal running in of the saw band produces ideal rounded cutting edges and therefore the conditions for an optimal service life.

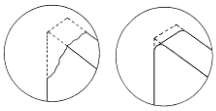

***Note:*** *Run regrinding saw bands too.*

## 2.13.4. Tables for teeth selection

**SHAPED MATERIAL ($D_p$, S = mm)**

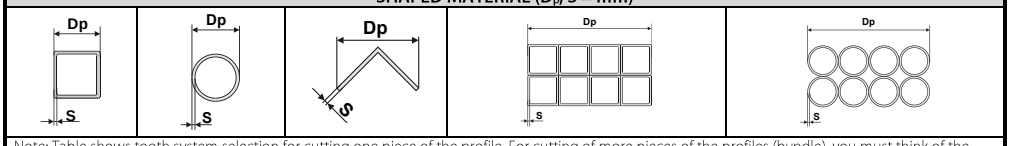


Note: Table shows tooth system selection for cutting one piece of the profile. For cutting of more pieces of the profiles (bundle), you must think of the size of the wall as double size of the wall of one profile (that means, size „S" equates to 2×S). In table, there are tooth systems constant and variable.

| Size of the wall S [mm] | Tooth system ($Z_pZ$) Outer diameter of the profile $D_p$ [mm] | | | | | |
|---|---|---|---|---|---|---|
| | 20 | 40 | 60 | 80 | 100 | 120 |
| 2 | 32 S | 24 S | 18 S | 18 S | 14 S | 14 S |
| 3 | 24 S | 18 S | 14 S | 14 S | 10–14 S | 10–14 S |
| 4 | 24 S | 14 S | 10–14 S | 10–14 S | 8–12 S | 8–12 S |
| 5 | 18 S | 10–14 S | 10–14 S | 8–12 S | 6–10 S | 6–10 S |
| 6 | 18 S | 10–14 S | 8–12 S | 8–12 S | 6–10 S | 6–10 S |
| 8 | 14 S | 8–12 S | 6–10 S | 6–10 S | 5–8 S | 5–8 S |
| 10 | - | 6–10 S | 6–10 S | 5–8 S | 5–8 S | 5–8 S |
| 12 | - | 6–10 S | 5–8 S | 5–8 S | 4–6 K | 4–6 K |
| 15 | - | 5–8 S | 5–8 S | 4–6 K | 4–6 K | 4–6 K |
| 20 | - | - | 4–6 K | 4–6 K | 4–6 K | 3–4 K |
| 30 | - | - | - | 3–4 K | 3–4 K | 3–4 K |
| 50 | - | - | - | - | - | 3–4 K |

| Size of the wall S [mm] | Tooth system ($Z_pZ$) Outer diameter of the profile $D_p$ [mm] | | | | | |
|---|---|---|---|---|---|---|
| | 150 | 200 | 300 | 500 | 750 | 1000 |
| 2 | 10–14 S | 10–14 S | 8–12 S | 6–10 S | 5–8 S | 5–8 S |
| 3 | 8–12 S | 8–12 S | 6–10 S | 5–8 S | 4–6 K | 4–6 K |
| 4 | 6–10 S | 6–10 S | 5–8 S | 4–6 K | 4–6 K | 4–6 K |
| 5 | 6–10 S | 5–8 S | 4–6 K | 4–6 K | 4–6 K | 3–4 K |
| 6 | 5–8 S | 5–8 S | 4–6 K | 4–6 K | 3–4 K | 3–4 K |
| 8 | 5–8 S | 4–6 K | 4–6 K | 3–4 K | 3–4 K | 3–4 K |
| 10 | 4–6 K | 4–6 K | 4–6 K | 3–4 K | 3–4 K | 2–3 K |
| 12 | 4–6 K | 4–6 K | 3–4 K | 3–4 K | 2–3 K | 2–3 K |
| 15 | 4–6 K | 3–4 K | 3–4 K | 2–3 K | 2–3 K | 2–3 K |
| 20 | 3–4 K | 3–4 K | 2–3 K | 2–3 K | 2–3 K | 2–3 K |
| 30 | 3–4 K | 2–3 K | 2–3 K | 2–3 K | 1,4–2 K | 1,4–2 K |
| 50 | 2–3 K | 2–3 K | 2–3 K | 1,4–2 K | 1,4–2 K | 1,4–2 K |
| 75 | - | 2–3 K | 1,4–2 K | 1,4–2 K | 1,4–2 K | 0,75–1,25 K |
| 100 | - | - | 1,4–2 K | 0,75–1,25 K | 0,75–1,25 K | 0,75–1,25 K |
| 150 | - | - | - | 0,75–1,25 K | 0,75–1,25 K | 0,75–1,25 K |
| 200 | - | - | - | 0,75–1,25 K | 0,75–1,25 K | 0,75–1,25 K |

**SOLID MATERIAL (D = mm)**

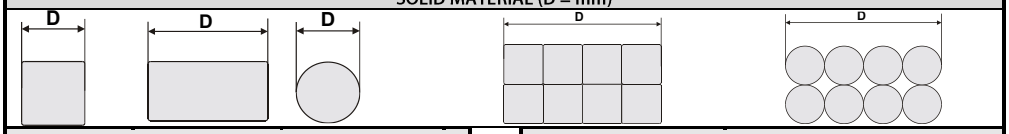


| Constant tooth system | |
|---|---|
| length of the cut D | tooth system ($Z_pZ$) |
| to 3 mm | 32 |
| to 6 mm | 24 |
| to 10 mm | 18 |
| to 15 mm | 14 |
| 15–30 mm | 10 |
| 30–50 mm | 8 |
| 50–80 mm | 6 |
| 80–120 mm | 4 |
| 120–200 mm | 3 |
| 200–400 mm | 2 |
| 300–800 mm | 1,25 |
| 700–3000 mm | 0,75 |

| Variable tooth system | |
|---|---|
| length of the cut D | tooth system ($Z_pZ$) |
| to 30 mm | 10 –14 |
| 20–50 mm | 8–12 |
| 25–60 mm | 6–10 |
| 35–80 mm | 5–8 |
| 50–100 mm | 4–6 |
| 70–120 mm | 4–5 |
| 80–150 mm | 3–4 |
| 120–350 mm | 2–3 |
| 250–600 mm | 1,4–2 |
| 500–3000 mm | 0,75–1,25 |
| | |
| | |

# 3. Machine control

## 3.1. Starting the band saw

» 1. Switch on the main switch of the band saw. The main switch is situated on the side of the switchboard.

2. Switch on the safety circuit of the band saw (button **3** – control panel of the band saw).

## 3.2. Control panel

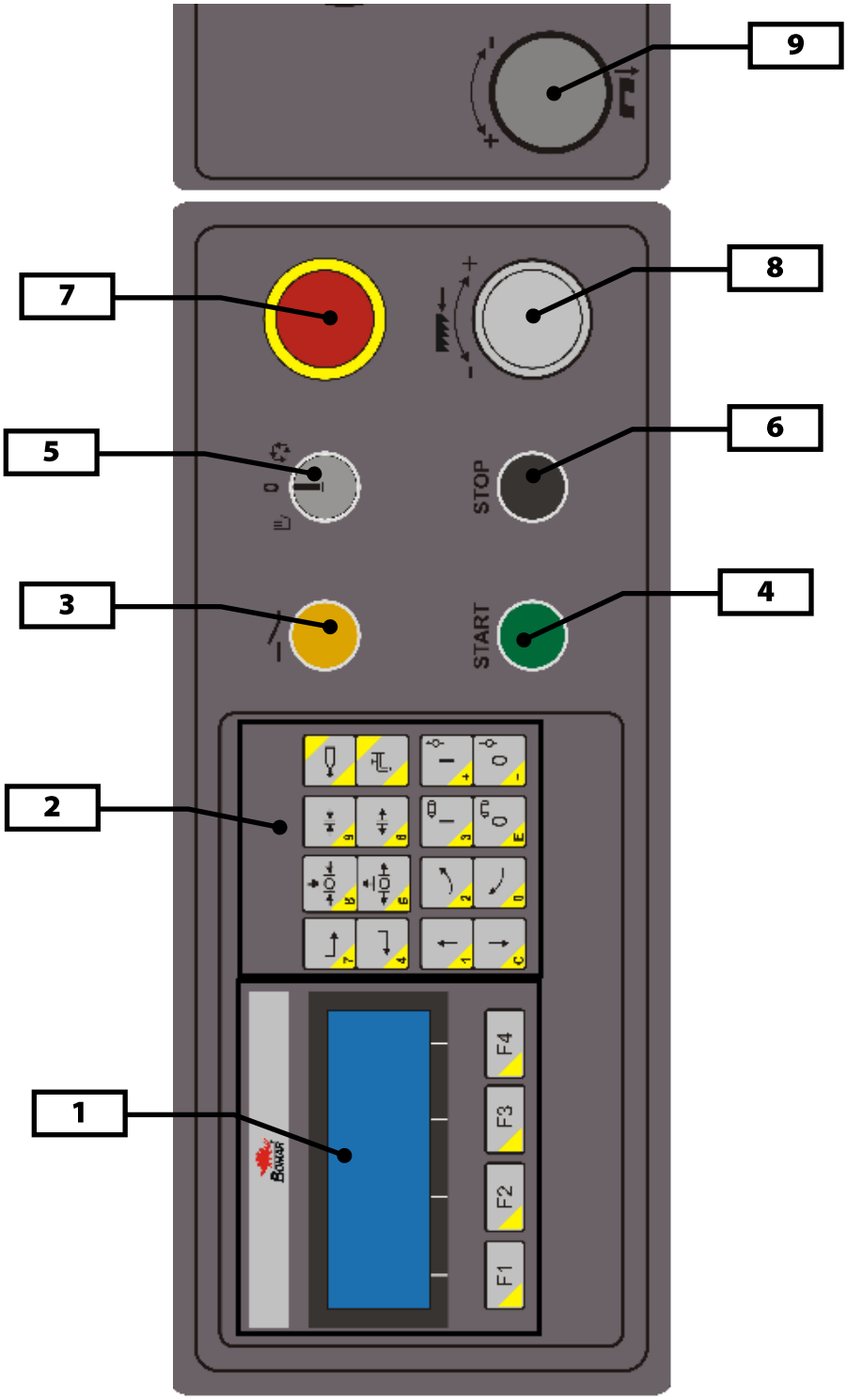

### 3.2.1. Control panel description

| | |
|---|---|
| 1 | **LCD Display**<br>Onto display are described all runnind processes, control with functional buttons **F1-F4** |
| 2 | **Control buttons / numeric keypad** |
| 7 / 4 | **No function** |
| 8 / 5 | **No function** |
| 9 / 6 | **Clamp / release vice**<br>In manual cycle pressing and holding the button allows you to release pressure or clamping vise.<br>. |
| | **Cooling system selection**<br>Cooling with Microniser (optional cccessories)<br>Cooling with water cooling pump runs even when the saw band drive isswitch off. |
| 1 / C | **Movement of the arm**<br>Pressing and holding a button or trigger arm lifts the lifting hydraulic cylinder. When lifting the arm using the arm can be lifted in its entirety lifting cylinder.<br>On the down can be activated by simultaneously pressing the **rapid move** functional button **F1**. |
| 2 / 0 | **No function** |
| I / 3 / 0 / E | **Turn on / off the band drive**<br>In manual mode the button is displayed "I" switched band drive, the button with the symbol "0" switch off |
| I / + / 0 / - | **Turn on / off the hydraulic circuit**<br>Button with the symbol "I" turns the hydraulic circuit, the button with the symbol "0" disables the hydraulic circuit. The hydraulic circuit is automatically switched on when needed. |
| 3 | **Safety circuit**<br>Switch on the safety circuit by pressing button. |
| 4 | **Button START - Switch on the semi-automatic cycle**<br>After pressing the button will start the cutting cycle |

| | |
|---|---|
| 5 | **Selecting a mode machines**<br>0 for servicing and settings<br>manual mode<br>semi-automatic mode<br><br>**Note**: The functions performed in both manual and semi-automatic mode are the same, but only in semi-automatic cycle it is possible to use the START / STOP (ie start / off cycle) |
| 6 | **Button STOP - Switch off on the semi-automatic cycle**<br>After pressing the button will turn off the interruption or of cutting cycle |
| 7 | **TOTAL – STOP button**<br>In emergency causes the machine must be immediately switched off. |
| 8 | **Frequency convertor**<br>Turn to change the speed of the saw band in the range of 20-120 m / min |
| 9 | **Governing valve for adjust the spped of the arm sinking to the cut**<br>Adjust the speed of the arm sinking to the cut by governing valve.<br><br>**Notice:** If you keep closing the throttle valve too tightly, the valve seat may wear off which causes its leakage. Therefore, close the valve always gently. |

## 3.3. Machine setup

Machine setup mode is activated by switch on control panel. Switch must be in **"0"** position.

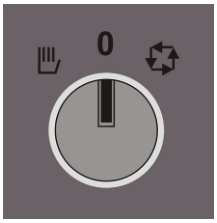


After swiching into position "0" is displayed on LCD this screen.

Reset to 0 a display showing angel on console by pressing **F2**.

### 3.3.1. SERVIS

After pressing the **F1** functional key can be set servis parameters that are password protected (947).

Control and movement in SERVIS can be set using the function keys **F1 - F4.**

| On display | Descriptiom |
|---|---|
| 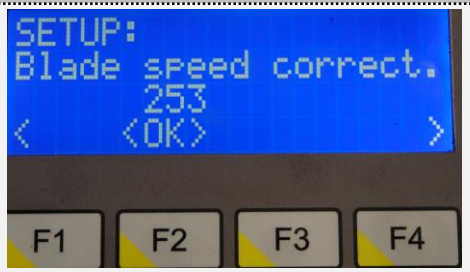  | **Blade speed correction**<br>• Constant for calculation of blade speed display values from analog input.<br>• **F1** go back, **F4** next menu screen, **F2** enter value |
| | **Sensor**<br>• Display variable sensor arm (optional accessories)<br>• Use to check the functionality of the sensor on the arm<br>• Read only<br>• **F1** go back, **F4** next menu screen |

| | |
|---|---|
| 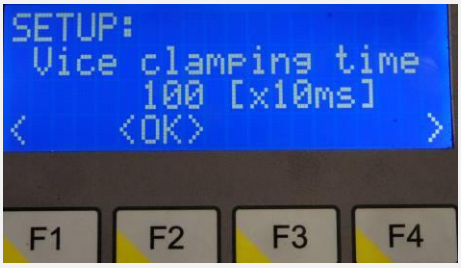 | **Vice clamping time**<br>• Watch vice clamping time in ms.<br>• **F1** go back, **F4** next menu screen, **F2** enter value |
| | **The type of machine.**<br>• Display the machine type (the value set by the manufacturer)<br>• Read only |

### 3.3.2. SETUP

After pressing the **F4** functional key can be set setup parameters that are not password protected.

Control and movement in SETUP can be set using the function keys **F1 - F4.**

| On display | Description |
|---|---|
| 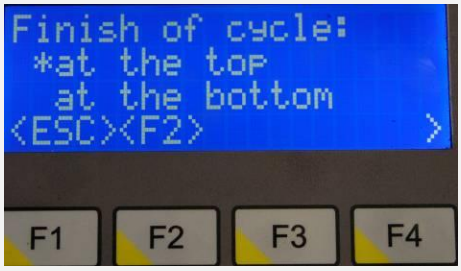 | **Finish of cycle**<br>• At the top – arm after cut starts above the material and cutting cycle ends<br>• Athe the bottom – arm after cut remains in the lower position, the above material does not exit<br>• **F1** go back, **F4** next menu screen, **F2** enter value |
| | **Turn off motor after cut**<br>• Up position – saw arm move up after cut and then turn off drive of saw blade.<br>• Down position – drive of saw band turn off immediately after cut.<br>• **F1** go back, **F4** next menu screen |

**Upper vice**

- Allows to able / disable the upper vice in the cutting process
- **F1** go back, **F4** next menu screen, **F2** enter value

**Vice opening time**

- Watch vice opening time in ms.
- **F1** go back, **F4** next menu screen, **F2** enter value

**Upper vice opening time**

- Watch upper vice opening time in ms.
- **F1** go back, **F4** next menu screen, **F2** enter value

**Switch off hydraulic**

- Setting the hydraulic unit off when idle machines
- **F1** go back, **F4** next menu screen, **F2** enter value

**Language**

- Choose menu language
- **F1** go back, **F4** next menu screen, **F2** enter value

**Displaying of speed**

- Displaying of band speed according to the selected units
  (m / min or ft / min)
- **F1** go back, **F4** next menu screen, **F2** enter value

## 3.4. Machine error messages

| Error | Information |
|---|---|
| SAFETY BUTTON is OFF<br>F1 F2 F3 F4 | Saffety button (pos. **3** on kontrol panel) is not ON.<br>Press **F4** to confirm error. |
| TOTALSTOP pressed<br>F1 F2 F3 F4 | Total Stop button is active. Turn button **TOTAL STOP** according to the arrows.<br>Press **F4** to confirm error. |
| Blade tension faulty<br>F1 F2 F3 F4 | Saw blade in properly tensioned.<br>Press **F4** to confirm error. |
| Faulty motor protec.<br>F1 F2 F3 F4 | Engine temperature protection is active.<br>**Do not overload saw!**<br>Press **F4** to confirm error. |

## 3.5. Machine control

### 3.5.1. Semi-automatic cycle

1. Lift the saw arm to the top position by pressing button 1.
2. Open the vice by pressing button 6.
3. Clamp material to the vice by pressing button 9.
4. Lower the frame about **10 mm above the material** by button C.

***Attention!***
*Do not move the saw frame to the material, when the saw band driving is not running! Do not move the saw frame to the material with accelerated motion! The saw band can be damaged!*

5. Set the maximal height of saw arm by F2.

   If arm height was not set the screen below appears:

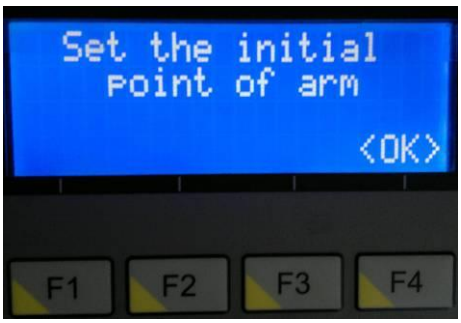


   Press button **F4** and then set the position of arm by buttons ↑ and ↓ and confirm by pressing **F2**.

6. Press button **START** (position **4**) of semi-automatic cycle.

   Set the saw band speed according to the kind of the cutting material.

   Set the speed of the arm sinking by adjust governing valve (position **9**).

> ***Attention!***
> *Press button „6" (STOP of semi-automatic cycle). In risk of injury or damage of the band saw, press the emergency button TOTAL STOP "7"!*

7. The band saw clamps the material to the vice and it makes the cut.

8. Open the vice. If the vice is not opened, you can open it by button 6. Remove the blank ((cut off a piece of material).

9. You can repeat whole process.

### 3.5.2. Cycle breaking

» **STOP button**

Semi-automatic cycle is interrupted by pressing button **STOP** (position **6**) of the semi-automatic cycle.

The arm is lifted to the top position and the saw band drive is stopped..

By pressing button ***START*** (position **4**) of the semi-automatic cycle, you can start the cycle.

**TOTAL STOP button**

In case of the risk, press button **TOTAL STOP** (position **7**).

After pressing **TOTAL STOP** button, saw band drive is immediately broken and the arm sinking is stopped.

**Reactivation**

1. Turn button **TOTAL STOP** according to the arrows (on the button).
2. Switch on the **Safety circuit** by button (position **3**).
3. By pressing button **START** (position **4**) of the semi-automatic cycle), you can start the cycle. The arm is lifted to the top position and the saw band starts the cycle.

## 3.6. Band saw adjusting

### 3.6.1. Cutting speed adjusting

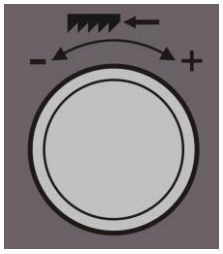


Speed of the saw band is possible change from ***20 to 120 m/min***. You can effect to adjusting speed of the saw band following.

Use the frequency convertor by button ***8*** (position on control panel) to adjust requested speed of the saw band. You can see the speed on display. Band speed is displayed on the screen **1** (position on control panel) during one semi-automatic cycle.

### 3.6.2. Speed adjustment of the arm lowering

Set the speed of the arm lowering to the cut by control valve for Cutting pressure regulation **9** (position on control panel).

- Set the lower speed of the arm lowering to the cut by turning the switch clockwise.
- Set the higher speed of the arm lowering to the cut by turning the switch anti-clockwise.

***Notice:***
*If you keep closing the throttle valve too tightly, the valve seat may wear off which causes its leakage. Therefore, close the valve always gently.*

### 3.6.3. Angular cut setting

The cut angle is possible set from **–60°** to **+60°**

1. Lift the saw frame.

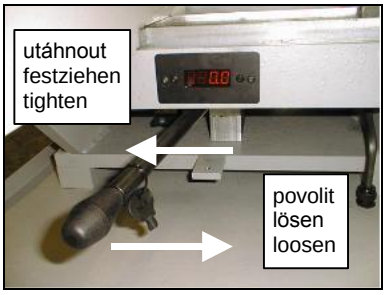


2. Loosen the securing lever of the console and set the desired cut angle. Setting cut angle is depicted on the display over the securing lever.
3. Tighten the securing lever of the console.

4. Shift the vice according to setting angle of the cutting. Shift the vice to the right for angle of the cut, which is less than 0°, shift the vice to the left for angle of the cut 0° or for angle of the cut, which is bigger than 0°..

| Angle < 0° | Angle ≥ 0° |
|---|---|
| | |

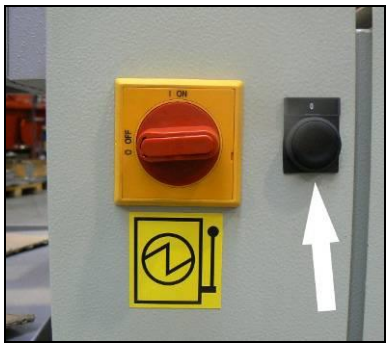


*Set the saw frame to the position 0° and press button zeroizing of the angle (on the distribution box under the main switch) after main switch starting of the machine. Angles admeasurement is secured.*

### 3.6.4. Adjusting of the guide cubes span

If you want to achieve a smooth and precise cut, it is helpful to position the guide cube as close as possible to the material.

1. Release the lever of the left listel and move left part of the guide apparatus so that the left guide cube edge is as close to the cut material as possible.

2. Lower the frame to the lower position and check the position of the guide cube towards vice loading area. The guide cube must be a distance of at least 10 mm from the vice loading area.

3. Tighten the lever of the gib and check the guide cube setting once more for possible collision with binding table or vice jaw.

### 3.6.5. Pressure adjusting to the cut

The band saw **Transverse 510.330 DGH** is equipped with automatic down-feed regulator on the right guiding cube. The band saw can be equipped with down-feed regulator on the left guiding cube for requirement of the customer.

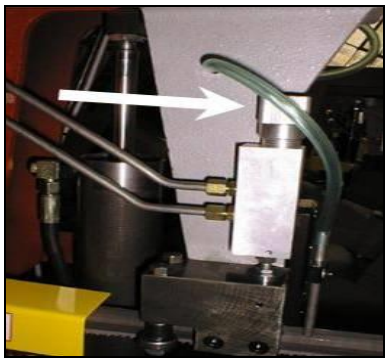

Adjusting the down-feed regulator is performed with regulating wheel on the guiding cube. Screw on the wheel, the pressure is increased. Screw off the wheel, pressure is lowered.

| Picture | Sequence |
|---|---|
| 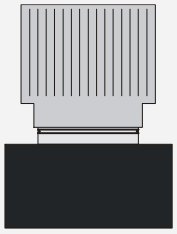 | **One visible neck**<br>Solid material over ∅300 mm. |
| 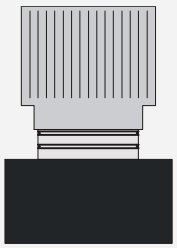 | **Two visible necks**<br>Solid material to ∅100 -∅300 mm. |
| 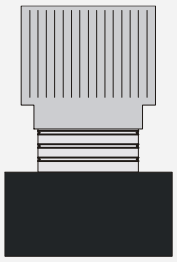 | **Three visible necks**<br>• Pipes and shapes material with surface from 10 – 15 mm.<br>• I-shaped material from 200 – 500 mm.<br>• Solid material to ∅100 mm. |

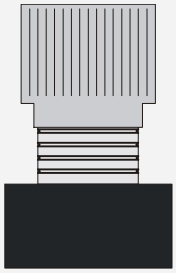

**Four visible necks**

- Pipes and shapes material with surface to10 mm.
- I-shaped material to 200 mm.

## 3.7. Material insertion

- Never walk under a suspended load!
- Never climb onto the gravity-roller conveyor!
- Do not hold the material for clamping material to the vice! The vice can cause injury!

### 3.7.1. Handling agent selection

- Use the strong handling agents to lift and transfer the material!
- Handle with the material only with the lift truck or use the suspension strands and the crane!
- Do not use the lift truck or crane in case that you do not have the license to handle with it!

### 3.7.2. Insertion

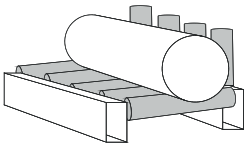

Insert material to the vice and ensure that the material cannot move in the vice or fall from the vice after the clamping. If you cut long pieces of the material (for example rod, tube), you must use the roller conveyors for material shifting to the band saw. Contact Bomar for more information about roller conveyors

Make sure the conveyor is long enough and the material cannot tip off the conveyor.

Be especially careful with round materials that it always stays on two vertical rollers and that it cannot fall off the conveyor!

### 3.7.3. Bundle material cutting

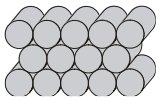

If you want to cut the material in the bundle, there are suggestions for the positioning of bundles

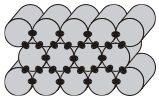

*Round material bundle:* Take care especially with round material that the bars are put according to the picture. If the bars are put differently, you may have problems with movement.

Always weld the material at the rear end of the bundle to secure it from moving.

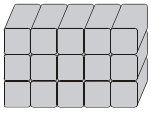

Before welding always, switch the machine off at the main switch! The magnetic fields, which often occur during welding, may damage the controls!

*Square material bundle:*

***Attention!***
*Not all material shapes are suitable for bundle cuts. Keep the recommendation of your supplier of the saw bands for material insertion to the bundle.*

# 4. Machine service

## 4.1. Saw band dismantling

1. Lift the saw frame by button „Lift the saw frame“ to the top position. If the saw band is breaking, press buttons „Lift the saw frame“ and „Start of aggregate hydraulics.

2. Release the securing lever of the left holder of the guiding cube and move whole part of the guiding including left cover to the right side.

3. Dismantle left protective cover of the band. Cover is fastened by screw with plastic head.

4. Release 3 clasps on rear cover of the frame and move the frame up.

5. Release the adjusting screws of the hard metal guides, that the band was loose.

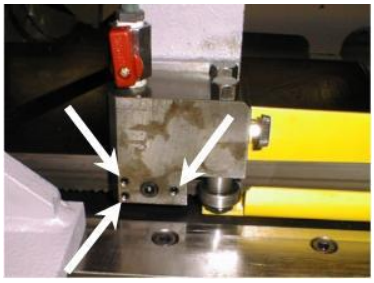

6. Release the saw band stretching by means of screw, until it is possible to remove the band off the wheel.

7. Pull down the band from the wheels.

8. Carefully to remove the saw band from the guide cubes.

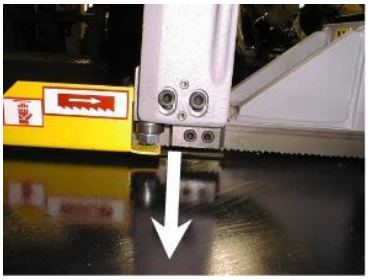

## 4.2. Saw band installation

1. Prior to installation clean all track wheels and guide shoes thoroughly, removing all traces of chips and dirt
2. Put the saw band to both guiding cubes. Make sure the saw band runs between both guide pulleys and it is pushed all the way to the top.

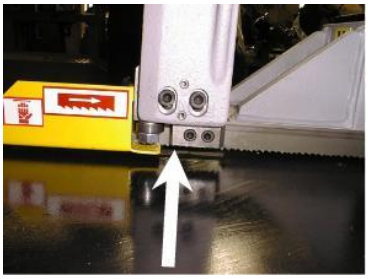

3. Insert the saw band on both guiding wheels. Make sure, that saw band rear part fit tightly to the wheel rim.

4. Stretch the saw band by means of the screw, that the band did not falls from wheels.
5. Close the rear cover of the frame.
6. Install yellow protective cover of the band.

7. Make the hard metal guides setting according to chapter.

## 4.3. Saw band stretching and inspection

Right saw band stretching is one of the most important criteria's, which influents accuracy and saw band service life. Stretch the saw bands according to the selected saw band and the band saw. Keep the recommendation of your manufacturer.

| Pilový pás<br>Sägeband<br>Saw band | Napětí pilového pásu<br>Sägebandspannung<br>Blade tension | Napětí pilového pásu PSI (pro Tenzomat)<br>Sägebandspannung PSI (für Tenzomat)<br>Blade tension PSI (for Tenzomat) |
|---|---|---|
| 20 x 0,9 mm | 160 $N.mm^{-2}$ | 23 500 |
| 27 x 0,9 mm | 180 $N.mm^{-2}$ | 26 500 |
| 34 x 1,1 mm | 210 $N.mm^{-2}$ | 30 500 |
| 41 x 1,3 mm | 240 $N.mm^{-2}$ | 35 000 |
| 54 x 1,3 mm | 240 $N.mm^{-2}$ | 35 000 |
| 54 x 1,6 mm | 280 $N.mm^{-2}$ | 40 600 |
| 67 x 1,6 mm | 290 $N.mm^{-2}$ | 42 000 |
| 80 x 1,6 mm | 300 $N.mm^{-2}$ | 43 500 |

### 4.3.1. Mechanical indicator of belt tightening

To facilitate tightening of the belt, a mechanical indicator is installed on the machine by default, enabling the belt to be tightened to the optimum value easily and quickly.

Mechanical indicator of belt tightening

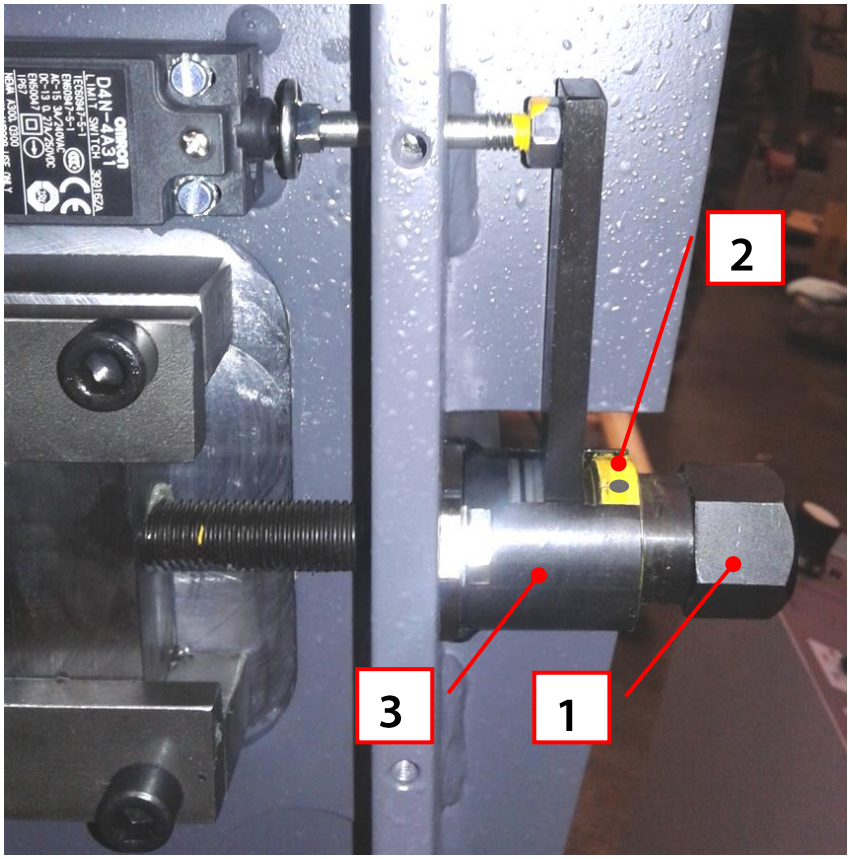


| | |
|---|---|
| 1 | Tightening screw |
| 2 | Yellow ring – indicator of correct belt tightening |
| 3 | Bush |

1. **After the belt replacement, the tightening screw (Pos. 1) must be tightened** so that the face of the yellow ring (Pos. 2) be aligned with the face of the bush (Pos.3)

   **The areas indicated in red in Fig. 1 must be aligned.**

   **Fig.1**

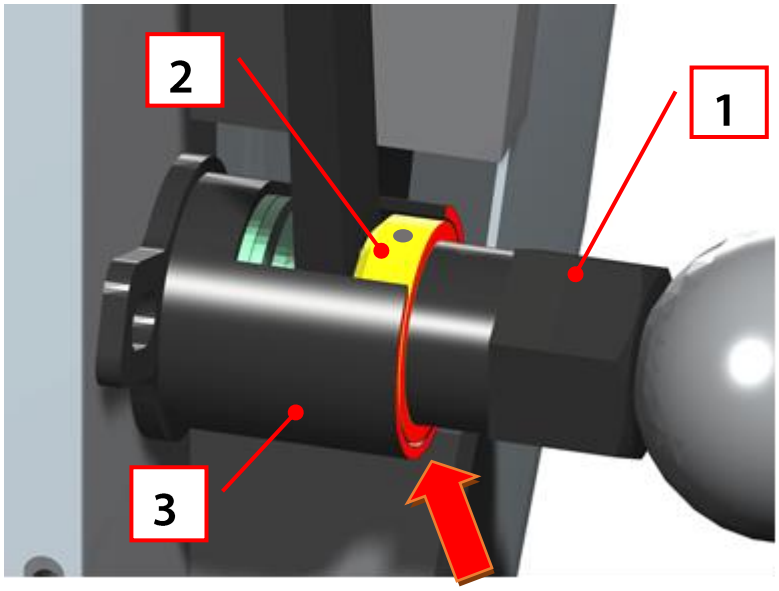


NOTE:

**The belt length with deviations within normal tolerances has no influence on the method of the belt tightening indication!**

If the belt length deviations fall within normal tolerances and the belt is tightened correctly, the face of the yellow ring (Pos. 2) is always aligned with the face of the bush (Pos. 3), regardless of the real dimension of the belt.

**Belts with deviations outside the normal tolerances must not be mounted on the machine!**

### 4.3.2. Hydraulic indicator of belt tightening (optional accessory)

If the machine is equipped with a hydraulic indicator of the belt tightening (optional accessory), the belt tightening value can be seen on the indicator gauge.

**The optimum working tightening value of the belt is indicated with a green arrow.**

## 4.4. Saw band run adjustment on stretching wheel

Saw band run on the stretching wheel must be regularly inspected. The inspection has to follow every saw band replacement.

### 4.4.1. Saw band run inspection

**If the run is not correct, the following problems may occur:**

- **The saw band falls off the wheel** – The saw band and protective cover can be damaged.
- **The saw band runs on the wheel rim** – The saw band and wheel rim can be damaged

1. Start and stop saw band drive.
2. Stop the main switch!.
3. Open rear cover of the saw frame.

4. Check saw band placing on the wheels.

- If the distance of the rear part of the saw band from wheel rim is **1 mm**, setting is right.
- If the distance is bigger than **1 mm**, or the saw band runs on the wheel rim, saw band run must be set.

### 4.4.2. Saw band setting

The saw band run is set with screw in the stretching cube on the saw frame. Optimal distance has been determined at **1mm**.

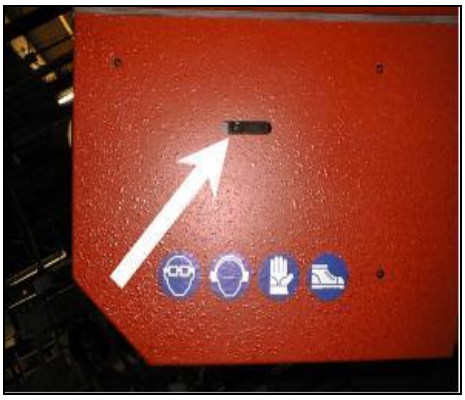

- Turn by screw to the right, the saw band approximates to the stretching wheel rim.
- Turn by screw to the left, the saw band departs from the stretching wheel rim.

Check saw band run again after setting.

## 4.5. Adjusting of the limit switch of the saw band stretching

After the saw band is replaced, the saw band stretching must be checked. If the limit switch is not adjusted correctly, the band is stretched too little or too much.

1. Dismantle the protective cover

2. Tighten the saw band  on the optimal value using TENZOMAT (see table for TENZOMAT)

- If the drive engine is switched on, but it is not running, turn with the screw clockwise, until the engine begins run..
- If the drive engine is possible switched on, turn with the screw anticlockwise, until the engine is stopped and then turn with the screw clockwise, until the engine begins run.

3. Install the protective cover.

4.

## 4.6. Guide cubes adjustment

The guiding cubes are set from the manufacturer. Cubes are secured with two pins. It is not necessary to set the guiding cubes all the while of the lifetime.

## 4.7. Hard metal guides adjustment

Hard metal guides adjustment is one of the most important criterions which influences cutting accuracy and saw band life. Therefore, it is essential to check regularly that hard metal guides adjustment is correct.

1. Release the screw. The screw holds the guide in the guiding cube. Make sure, that the guide of the hard metal does not falls

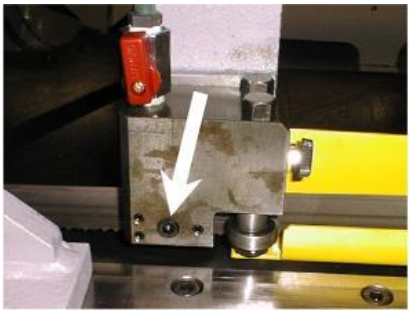

2. Press the guide on the saw band by tighten three screws. Check, if the hard metal guide does not put up to much resistance against the movement of the band. As soon as it is possible to move the band without resistance (and between saw band and the guide is not width) the hard metal guides are adjusted.

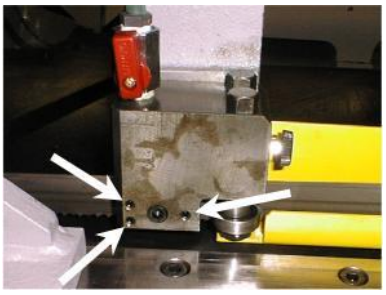

3. Tighten the screw. The screw holds the guide in the guiding cube. Make sure, that the guide is not damaged

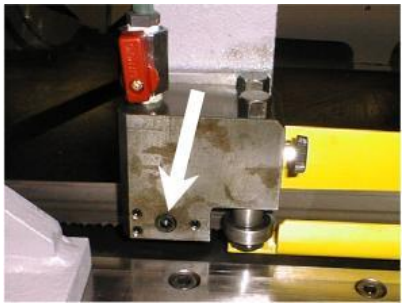

Make sure that the hard metal guides do not put up to much resistance otherwise the lifetime of the saw band and drive decreases.

## 4.8. Saw frame lower stop position adjustment

The lower stop limits the lowest position of the saw frame. This stop point has to be checked at least once a month. If the lower stop point is incorrectly adjusted, the cutting table can be damaged or the material will not be cut completely.

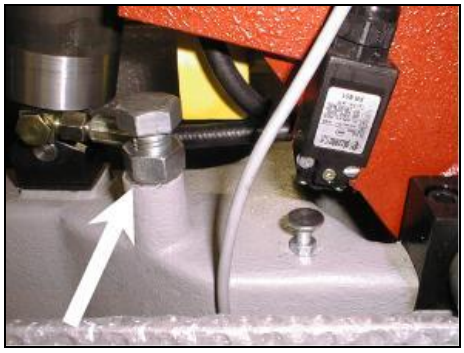

1. Lift the saw frame to the top position.
2. Release the nut of the screw and set it to the desired value.
3. Secure the screw with nut.
4. Set the limit switch of the saw frame lower position

## 4.9. Limit switch of the saw frame lower position adjustment

***If the lower stop of the saw frame was set, the limit switch must be set again.***

Lower the saw frame to the bottom position. If the saw frame is on the lower stop and the limit switch was responded, the limit switch adjustment is right. If the limit switch is not right, it must be set.

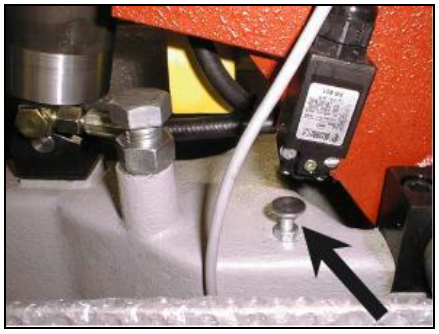

**Limit switch setting**

1. Release the nut of the stop screw of the switch and screw the screw.
2. Lower the saw frame to the lower stop and start saw band drive..
3. Screw off the stop screw of the switch, until the saw band drive is not stopped.
4. Secure the screw with the nut and check limit switch adjustment again.

5.

## 4.10. Adjustment of the securing cube of the turning lever

The securing cube is adjusted right from the manufacture, but if the saw frame is not secured, the securing cube must be adjusted. Check the functionality of this cube regularly; if the console is not fastened correctly, inaccuracy may occur.

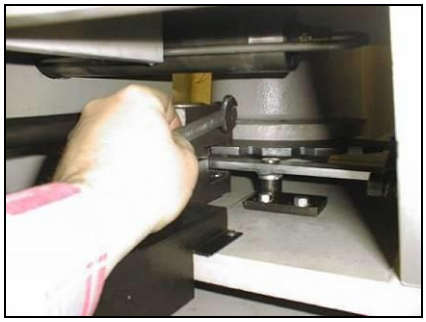

1. Release the fixative screw of the securing lever. By lever is possible to move
2. Turn by lever to the left side to the stop and fasten the fixative screw again.

3. Secure the console by lever and carry out the inspection

If the adjustment is correct, the saw frame cannot be turned around

## 4.11. Pressure switch adjustment

**Be careful for working on the hydraulic system!**

*In hydraulic system stays residual pressure after hydraulic aggregate stopping!*

- The pressure switch is located on the vice hydraulic cylinder.

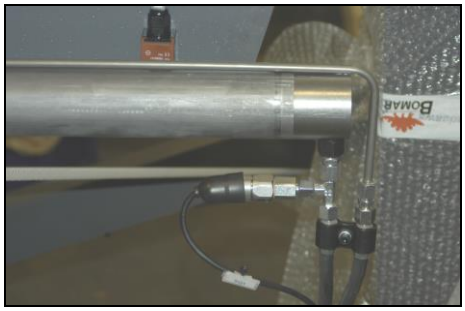

- Pull off the elastic cover of the pressure switch (carefully – outlets must not be broken).

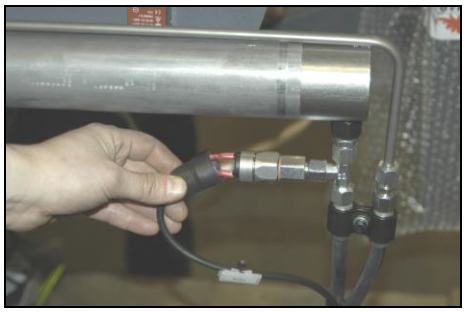

- Set the sensitivity of the pressure switch by means of the screwdriver.

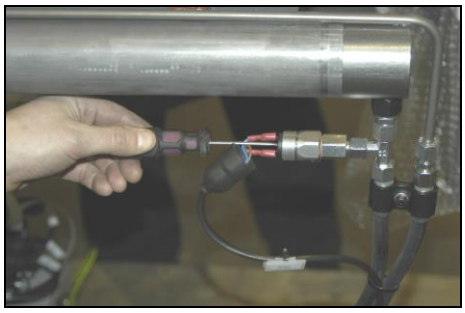

- Turn by screwdriver to the left, the sensitivity is bigger Turn by screwdriver to the right, the switch will be clip with higher pressure

**Check limit switches adjustment:**

- ***The vice is clamped*** – The pilot lights of the control system are lighted
- ***The vice is opened*** – The pilot lights of the control system are not lighted
- ***The vice is on the move*** – The pilot lights are not lighted, they are not winked

Return the cover on the pressure switch after adjustment

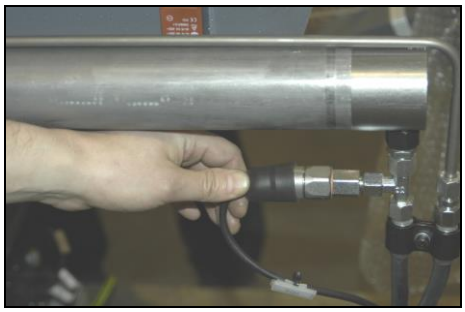

## 4.12. Pressure adjustment of the hydraulic system

**Be careful for working on the hydraulic system!**

*In hydraulic system stays residual pressure after hydraulic aggregate stopping!*

- Switch off the machine. Remove the screw coupling from the vice hose.

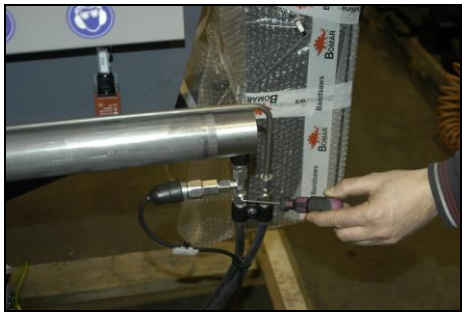

- Screw on the manometer in place of the screw (thread G1/4") with range 0 – 60 bar.

**Switch on the machine; turn the switch with the key to the position „set mode“.**

***Work extremely carefully now!!!***

- The hydraulic circuit can be pressurized by pushing the vice clamping button on the control panel.
- Loosen the backnut of the setting screw.

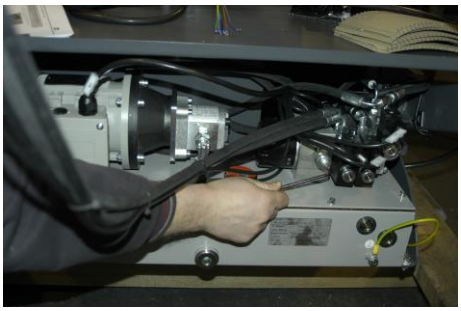

- Adjust the pressure by means of the setting screw and pressure gauge. If the required pressure has been adjusted, tighten the backnut. Switch off the main switch of the machine.
- Remove the pressure gauge and screw back the vice hose.

## 4.13. Brush adjustment

The brush for chip removal from the saw band influences cutting durability, saw band lifetime and wheels lifetime, hard metal guides and finally the cut accuracy. Brush adjustment must be checked every shift.

1. Lift the cover of the saw frame.

2. Release screws on the brush holder.

3. The brush must touch with teeth of the saw band.

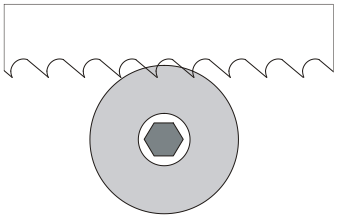

***Notice!***
*The brush **must not** touch the bottom of the saw teeth!!*

4. Tighten the screws on brush holder after brush adjustment.

### 4.13.1. Adjustment of the regulating pressure to the cut

Set the body of the regulation by adjusting handle. It is under the handle. Set it on the second groove. There is visible one neck (pos. 1, 2).

Screw the stopper screw to the maximum, or the valve will be blocked (pos. 3)

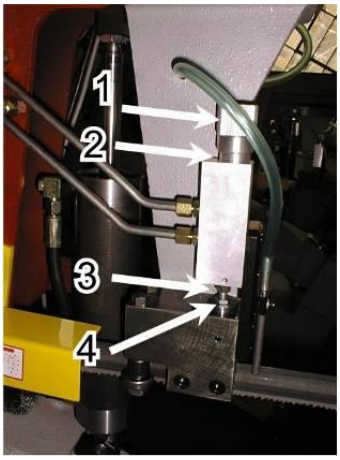


Now the frame can be freely moved up only, because the saw frame movement is blocked with the governing valve

Press button „ saw frame down „ screw on the setscrew

Screw in the stop screw as long as you reach the optimal speed of the frame sinking

Optimal speed of the frame sinking is between 35 sec

Secure the adjusting screw by means of the nut after reaching of the sinking speed

Switch on the engine of the drive and check speed of the saw frame sinking again

### 4.13.2. Adjustment of a throttle valve

1. Switch off the machine by its main switch. Let the sawing head down at the bottom. Close the throttle valve gently.
2. The worm screw (pos. A) must be next to the stop (pos. B), when the valve is closed

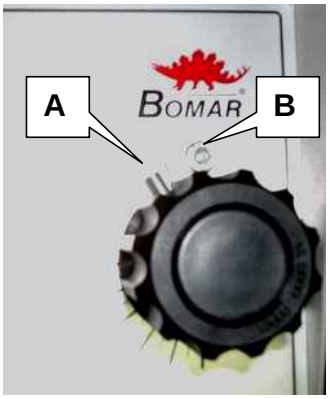

3. Otherwise, you must loosen the worm screw, lift the plastic knob and close the throttle valve to the maximum. Next loosen the worm screw and take off the plastic knob. Put it back so that the worm screw must be next to the stop while the valve is closed. Then tighten the worm screw again

4. Turn the machine on and test the down-feed control

## 4.14. Cooling agents and chips disposal

| The quality of the cooling agent will deteriorate due to: | If the solution is too weak: | If the solution is too strong: |
|---|---|---|
| • use of contaminated water<br>• impurity<br>• outside oil contamination (hydraulics, gears)<br>• high operating temperatures<br>• lack of air circulation<br>• wrong concentration | • corrosion protection is diminished<br>• lubrication decreases<br>• microbial attack is more likely | • the cooling ability is decreased<br>• foam behaviour increases<br>• emulsions stability deteriorates<br>• sticky residue develops |

### 4.14.1. Coolant device inspection

The state of the cooling agent has significant influence on the cutting quality and on the operational life of the machine. Lifetime of the cooling liquid is 1 year, after this time we recommend change the cooling liquid. This time is dependent on the degree of pollution cooling liquid (especially with oils) and on the other factors.

***Check level of the cooling liquid and function of the pump periodically!***

> ***Note***
> *If the state of the cooling liquid is not satisfactory, the cooling liquid must be changed.*

**Check the state of the cooling agent according to the following table:**

| Testing | Interval | Method | Condition | Precaution |
|---|---|---|---|---|
| **Liquid level** | daily | visually | too low | after concentration check, refill with water or emulsion |
| **Concentration** | daily | refractometer<br>densimeter | too high<br>too low | refill water<br>refill base emulsion |
| **Smell** | daily | by sense of smell | unpleasant smell | good ventilation, add biocides or renew coolant |
| **Contamination** | daily | by sense of smell | visible oil leaks, sludge fungi | surface cleaning, fix leaks, add biocides or fungicides, or coolant renewal after added system cleanser* |
| **Corrosion-protection** | when necessary | visually<br>chip test<br>Herbert-test | insufficient corrosion protection | test stability, if necessary – increase concentration or pH value |
| **Stability** | when necessary | refractometer | oiling | add concentrate, enquiries to supplier |
| **Foam reaction** | when necessary | shaking test | too much foam, foam disperses too slowly | avoid aeration, increase water hardness, ix with defoamer |

* According to manufacturers' instructions

### 4.14.2. Chips disposal

Chips resulting from cutting operations must be disposed of in accordance with the relevant regulations.

- Let the chips drip excess fluid!.
- Fill a watertight container with the chips! Be careful that the container does not leak, because even after a long dripping time, they still contain coolant residue.
- *Place the container into the care of a disposal company equipped for the disposal of chips contaminated with cooling liquid.* In case the machine is equipped with micro-spray installation, the chips must also be handed over to a disposal company.



## 4.15. Hydraulic, Greases and oils

### 4.15.1. Gearbox oils

In gearboxes, oil is used for the whole lifetime of the gearbox. We recommend replacing of the filling oil in case of repair.

Use oils with specification DIN 51517 in the gearboxes. Select the viscosity grade ISO VG according to the original oil fill.

***Attention!***
*When replacing, use oils recommended by BOMAR or oils, which has comparable parameters from the other manufacturers. Do not forget, that mineral and synthetic oils must not be mixed!*

**Recommended oils and quantity according to the type of the band saw**

| Band saw | Gearbox oil | Capacity |
|---|---|---|
| Transverse 510.330 DGH | Shell Tivela S 320 | 1,8 l |
| Swarf conveyor | Shell Tivela S 320 | 0,075 l |

**Comparative table of the gearbox oils**

| Manufacturer | Viscosity grade | | |
|---|---|---|---|
| | ISO VG 100 | ISO VG 220 | ISO VG 320 |
| BP | Energol GR-XP 100 | Energol GR-XP 220 | Energol GR-XP 320 |
| Castrol | Alpha SP 100<br>Alpha MW 100 | Alpha SP 220<br>Alpha MW 220 | |
| Elf | Reductelf SP 100 | Reductelf SP 220<br>Reductelf Synthese 220 | Reductelf SP 320 |
| Esso | Spartan EP 100 | Spartan EP 220 | Spartan EP 320 |
| Mobil | Mobilgear 627 | Mobilgear SHC 220<br>Mobilgear 630 | Mobilgear 632 |
| ÖMV | | PG 220 | |
| Paramo | PP 7 | Paramo CLP 220 | Paramo CLP 320 |
| Shell | Shell Omala 100 | Shell Omala 220<br>Shell Tivela S 220 | Shell Omala 320<br>Shell Tivela S 320 |
| Total | Carter EP 100 | Carter EP 220 | Carter EP 320 |

### 4.15.2. Lubricant greases

We recommend using lithium based saponified grease, class NGLI-2 for lubrication. Different greases are mixable, if their oil bases and consistence type are identical.

**Comparative table of the lubricant greases:**

| Manufacturer | Type of the lubricant grease |
|---|---|
| BP | Energrease LS - EP |
| DEA | Paragon EP1 |
| Esso | FETT EGL 3144 |
| | Beacon EP 1 |
| | Beacon EP 2 |
| FINA | FINA LICAL M12 |
| Klüber | Microlube GB0 |
| | Staburags NBU8EP |
| | Isoflex Spezial |
| Optimol | Optimol Longtime PD 0, PD1, PD2 |
| Shell Aseol AG | ASEOL Litea EP 806-077 |
| Texaco | Multifak EP1 |

### 4.15.3. Lubrication

There are several placing on the machine, which are necessary to grease periodically. It secures the right function of the machine.

| Lubrication place | Lubrication |
|---|---|
| 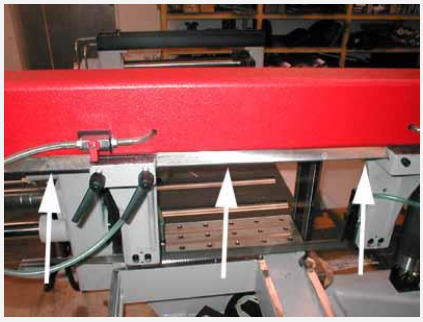 | The guiding cubes leading – grease with oil from both sides once a week. |

### 4.15.4. Hydraulic oils

Replace the hydraulic oil once in 2 years, because the oil can deteriorate its properties and cause problems the hydraulic equipment. If the hydraulic system is equipped with filter (2SF 56/48-0,063), replace the filter too.

Use oils with specification DIN 51524-HLP, ISO 6743-4 and viscosity grade ISO VG 32 in hydraulic aggregates. Hydraulic oils quantity – see chapter **Hydraulic oil level check**.

***Note***
*When replacing, use oils recommended by BOMAR or oils, which has comparable parameters from the other manufacturers. Do not forget, that mineral and synthetic oils may not be mixed!*

**Comparative table of the hydraulic oils**

| Manufacturer | Type | Manufacturer | Type |
|---|---|---|---|
| Agip | Oso 32 | Ina | Hidraol 32 HD |
| Aral | Vitam GF 32 | Klüber | Lamora HLP 32 |
| Avia | Avilub RSL 32 | Hungary | Hidrokomol P 32 |
| Benzina | OH-HM 32 | Mobil | Mobil DTE 25 |
| BP | Energol HLP 32 | ÖMV | HLP 32 |
| Bulgaria | MX-M/32 | Poland | Hydrol 30 |
| Castrol | Hyspin AWS 32 | Rumania | H 32 EP |
| Čepro | Mogul HM 32 | Russia | IGP 30 |
| DEA | Astron HLP 4hy6 | Shell | Tellus Oil 32 |
| Elf | Elfolna 32 | Sun | Sunvis 832 WR |
| Esso | Nuto H 32 | Texaco | Rando HD B 32 |
| Fam | HD 5040 | Valvoline | Ultramax AW 32 |
| Fina | Hydran 32 | | |

## 4.16. Hydraulic unit service

After 50 hours working time, or the latest 3 month after the first run, the first service should be carried out. This includes:

- checking off all screws and connections, fixing points, tubes and hoses for leakage
- Cheb hydraulic oil level
- During time of duty the oil temperature shouldn´t exceed 60-70°C
- check function of signaling components (thermometer, level gauge, dirty filter indicator)
- Check the adjustment of working pressure

**To realise a high reliability of the power pack, the manufacturer lays down following inspection intervals**

| Interval | daily | weekly | monthly | three monthly | six monthly | annually |
|---|---|---|---|---|---|---|
| **Hydraulic fluid** | | | | | | |
| Level | - | • | - | - | - | - |
| Temperature | - | • | - | - | - | - |
| Condition | - | - | • | - | - | - |
| Change interval | - | - | - | - | - | • |
| **Filter** Change interval | - | - | - | - | - | - |
| **Other checks** External Leakages | | | | | | |

| | | | | | | |
|---|---|---|---|---|---|---|
| Contamination | • | - | - | - | - | - |
| Damages | • | - | - | - | - | - |
| Noise-(level) | • | • | - | - | - | - |
| Gauges | • | - | - | - | - | - |
| | - | - | • | - | - | - |

## 4.17. Hydraulic oil level check

Pull up the gauge and check the state of the oil. The oil level must be situated between water-glas.

Fill the hydraulic oil, if it is necessary. Use always the filter (10 μm or better) when you fill the oil. You avoid impurities penetration to the hydraulic system and troubles in hydraulic system.

## 4.18. Machine cleaning

Clean the machine from the cooling liquid and impurities after every shift stopping. Conserve the guiding surfaces, mainly.

- Clamping jaws guiding of the vice.
- The guiding of the feeder.
- Loading surface of the vice.

## 4.19. Worn pieces replacement

### 4.19.1. Hard metal guides replacement

If the hard metal guides cannot be adjusted, they have to be replaced.

1. Remove the hosepipe leading to the cooling agent and dismantle saw band and saw band guiding cube

2. Fasten the guiding cube to the vice. Release clamping screws of both hard metal guides and remove them

3. Screw out the adjusting screw of the adjustable hard metal guide.

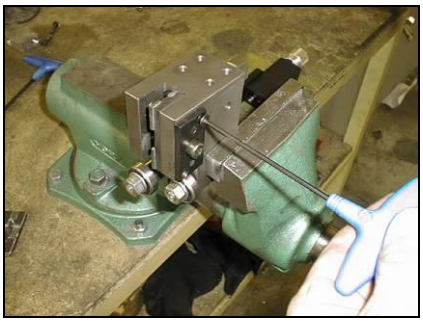

4. Screw out the adjusting screw of the adjustable guide as far from the guiding cube so that it is not possible to see it from the inner side.

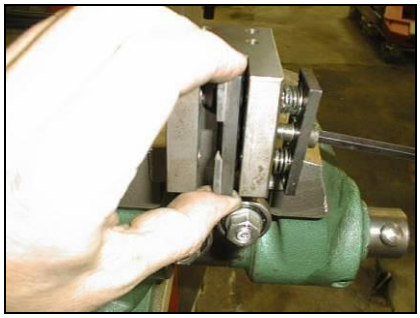

5. Remove the adjustable guide.

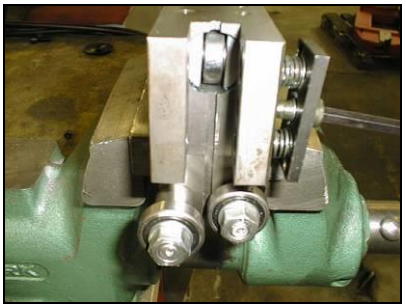

6. Insert new hard metal guides and screw on them.

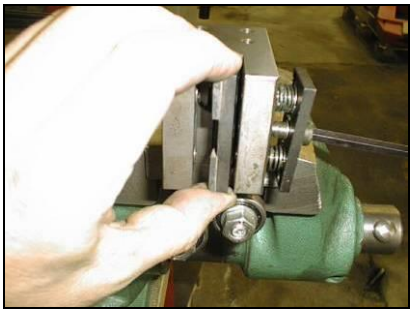

7. Install the cube on the holder and connect the cooling

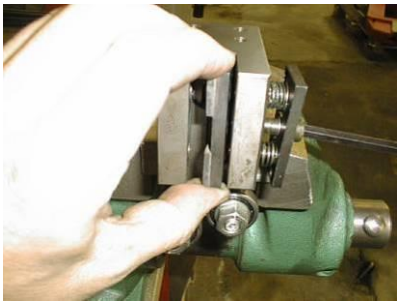

8. .Adjust hard metal guides

### 4.19.2. Pushing bearing replacement

If it is impossible to adjust the bundle gripping assembly and the pushing bearing is worn, it needs to be replaced.

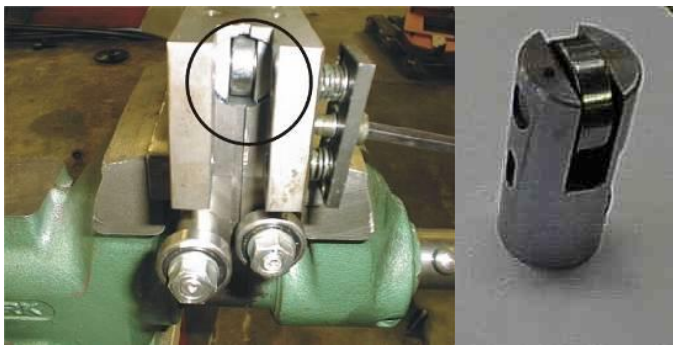

The bearing condition is possible discover, on the cube from the bottom side, for a better inspection is possible to put out the holder of the bearing from the cube.

If the bearing is worn, there is a visible channel on it.

***Bearing replacement:***

1. Disconnect the hosepipe from the cooling agent supply, screw off the cutting pressure regulation. The gripping assembly regulation should stay connected to the hydraulic system. Dismantle the guiding cube of the saw band
2. Fasten the guiding cube to the vice by means of the wrench no.3, release fixative screw of the bearing holder

3. Take out the bearing holder from the guiding cube

4. Insert the pivot to the vice
5. Remove the bearing pivot from the bearing holder by means of the swanger

***Attention!***
*The vice has aluminium jaws, eventually, there has to be an aluminium agent to protect the pivot from damage.*

6. Check all parts and remove the worn ones

7. Fasten the holder to the vice

***Attention!***
*The vice has aluminium jaws, eventually, there has to be an aluminium agent to protect the pivot from damage.*

8. nsert the bearing and washers and return the pivot to its original place
9. The pivot may not extend past the holder, otherwise, the bundle gripping assembly regulator gets worse.

10. Insert the holder to the guiding cube and fasten it by means of the screw and wrench.

11. Install the cube on the holder of the guiding cube, fasten cutting pressure regulation and connect cooling distribution

12. Set the guiding cube, hard metal guides and cutting pressure regulation

### 4.19.3. Fixed bearing replacement of the saw band guiding

If the fixed bearing is worn, replace it

1. Dismantle hard metal guide

2. Remove the screw by means of the wrench. It secure pivot of the bearing

3. Put the guide cube on the vice with its hole pointing up. The pivot of the bearing can release from the cube
4. Remove the bearing pivot by means of the hammer
5. Remove the bearing and washers from the cube
6. Check all parts and damaged parts and replace bearing

7. Insert bearing with washers to the groove in the cube and beat pivot

8. Complete the guiding cube according to the previous chapters. Install the guiding cube on the machine and set it

### 4.19.4. Saw band guiding pulleys replacement

If the saw band is not sufficiently guided by guiding pulleys or if the pulleys are obviously worn, the pulleys should be replaced

**ATTENTION!** Guiding pulleys must be replaced together on both guiding cubes!

1. Dismantle the saw band
2. Disconnect the hosepipe from the cooling agent input, screw off the cutting pressure regulation
3. The gripping assembly regulation should stay connected to the hydraulic system
4. Dismantle the guiding cube of the saw band
5. Tighten the guiding cube to the vice and dismantle both eccentrics with bearings following way

6. Remove the washers from the eccentrics
7. Remove eccentrics from the bearings by means of the swager

8. Pull up the eccentrics from the cube

9. Change both bearings and other worn parts

10. Install eccentrics to the cubes

11. Insert washer on the shorter eccentric and insert ring on the longer eccentric. Further add both eccentrics of bearings and attach them to the eccentrics with the help of a pipe

12. Shorter eccentric is located on the side of binding screws of the guide cube

**ATTENTION!!** Do not forget the eccentrics' position in the cube

13. Put the washers on the bearings

14. Screw on the securing nuts on the eccentrics by means of the two wrenches

15. Insert piece of the saw band to the guiding cube (c. 15 – 20cm)

16. Set the eccentrics by means of the wrenches, the saw band must run in the centre. Guide pulleys must not press too much on the band, but must spin freely during the band run
17. Optimal distance between the band and the pulley is 0,05 mm.
18. Remove the testing piece of saw band from the guide cube and attach the guide cube on the machine; adjust it

### 4.19.5. Round brush replacement

If the chip removing brush is not able to fulfil its function, it has to be replaced

1. Hold shaft of the brush by wrench

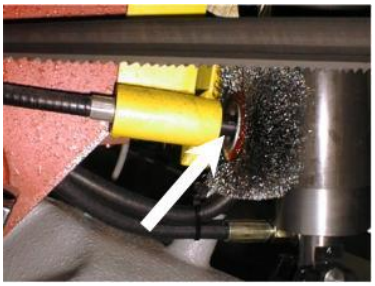

2. Release the nut on the brush, replace worn brush on the new brush, screw on the nut
3. Set the brush to the saw band

### 4.19.6. Variator band replacement

1. Dismantle lid of the variator and cover of the variator

2. Release securing nut of the top disk of the variator by lever

3. Release the screw of the variator

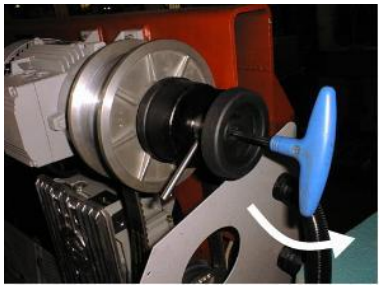

4. Dismantle hand wheel with the shaft and disk of the variator

5. Take down the strap of the brush drive (white arrow) and pull through old band by interstice between wheels (black arrow)

6. Put new band on the bottom disks of the variator and pull on the band. Print band between disks of the bottom variator

7. Stretch the band on the top disk of the variator and secure top part of the variator with second disk

**Attention!!**

8. The pivot prohibiting the variator regulation spinning has to fit into the frame channel.

9. Install the strap of the brush drive

   Install variator cover and front lid of the variator

   Switch on the machine and check functionality of the machine.

   Set the speed

### 4.19.7. Stretching wheel replacement

1. Dismantle the saw band.

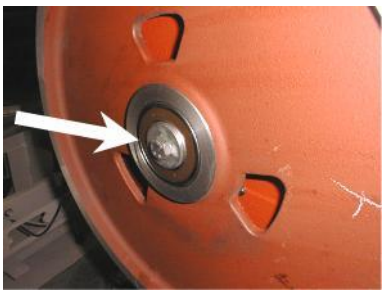

2. Screw off the screw and take down the washer.

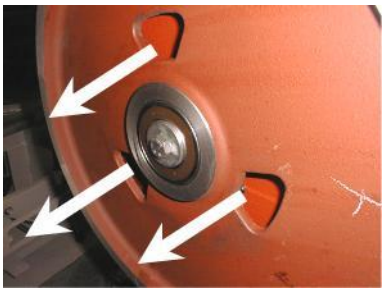

3. Pull off the wheel from the shaft by means of the three-armed puller. If bearing stayed on the shaft, pull off it too

4. Check score of the bearings of the stretching wheel and replace them for new.

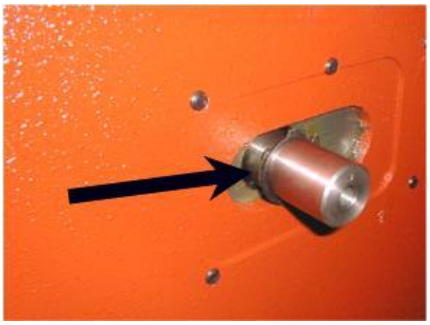

5. Clean the shaft and grease it with oil. Insert retaining ring to the groove.

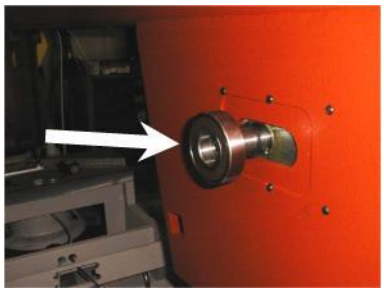

6. Install bearing on the shaft and move it to the retaining ring. Insert the distance ring on the shaft and move it to the bearing.

7. Insert the retaining ring to the hole in the wheel.

8. Insert the bearing to the hole in the wheel and press it to the retaining ring.

9. Put the wheel on the shaft and screw on the preparation to the wheel stretching to the hole in the shaft.

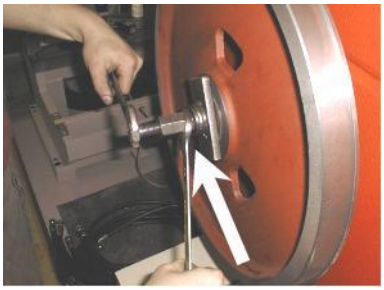

10. Pull on the wheel on the shaft.

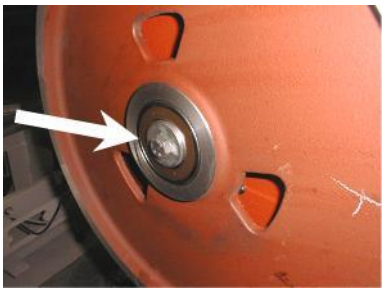

11. Screw on washer and screw back..
12. Install the saw band. Wheel replacement is ready.

### 4.19.8. Driving wheel replacement

1. Dismantle the saw band

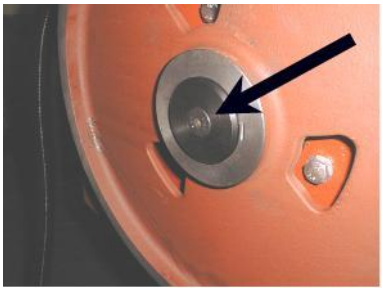

2. Screw off the screw and remove the washer.

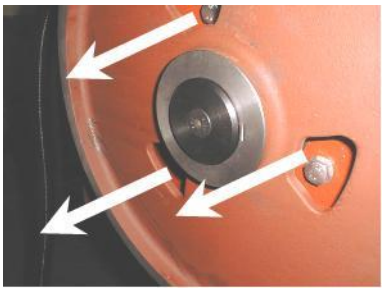

3. Pull off the wheel from the shaft by means of the three-armed puller.

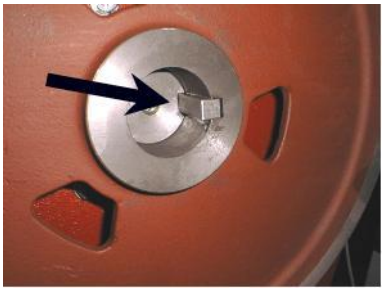

4. Install the wheel on the shaft. Insert the feather to the groove.

5. Screw on the preparation to the wheel stretching to the hole in the shaft. Pull on the wheel on the shaft.

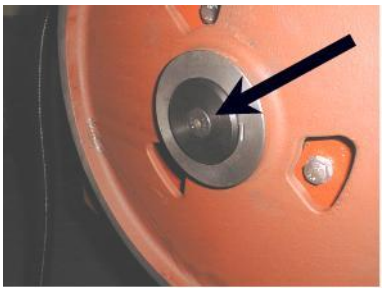

6. Screw on washer and screw back.
7. Install the saw band. Wheel replacement is ready

***Attention !***
*Only a qualified worker can carry out the connection!!*
*High-voltage shock may have fatal results.*
*Further instructions are needed for qualified personnel!*
*Do not do the work yourself!!!*

### 4.19.9. Cooling pump replacement

- The tank with cooling agent is fastened to the pedestal by screws
- Screw off the screws and remove the tank from the pedestal
- Remove the hosepipe leading to the cooling agent from the plug on the pump
- Unscrew four screws on the cooling pump flange and pull out the pump from the sheet metal holder
- Remove the pump clamp box cover. Disconnect 4 clamps of the input cables
- Loosen the bushing and pull the cable out of the pump
- Dismantle new pump clamp box cover
- Push the cable through the bushing and fasten it
- Connect the cable clamps on the pump clamps as is described in the previous case
- Install again the clamp box cover; do not forget the rubber gasket
- Seal the hosepipe leading to the cooling agent connection
- Put the pump on the sheet metal holder and secure it to the pedestal with the four screws

# 5. Závady / Troubleshooting

## 5.1. Mechanical problems

| Problem | Possible causes | Repair |
|---|---|---|
| 1. Slanting cut | - Wrongly adjusted hard metal guides. | Set according to the chapter „Servicing and adjustment“ |
| | - Worn hard metal guides. | Replace to the chapter „Worn pieces replacement“ |
| | - Wrongly adjusted cubes of the saw band guiding. | Set according to the chapter „Servicing and adjustment“ |
| | - Worn bearings of the saw band guiding. | Replace according to the chapter „Worn pieces replacement“ |
| | - Wrongly adjusted swarf brush. | Set according to the chapter „Servicing and adjustment“ |
| | - Worn swarf brush. | Replace according to the chapter „Worn pieces replacement“ |
| | - Insufficient saw band stretching. | Rise the saw band stretching and set the limit switch. |
| | - Wrongly chosen tooth system of the saw band. | Replace the saw band and keep the instructions of manufacturer on new saw band choice. |
| | - Worn saw band. | Replace the saw band. |
| | - Wrongly balanced roller conveyor. | Set the roller conveyor. |
| | - Dirty feeding board. | Cleanse the feeding board from debris, chip and residue material. |
| | - Guiding arm and guiding cube are loosened. | Clamp the guiding arm. |
| | - Guiding arm and cube are too far from the material. | Set the guiding cube to the material. |
| | - Too fast cutting rate. | Lower the material feeding speed. |
| | - Unexpected oscillation in material quality. | Set the cut and feeding speed to the relevant material. |
| 2. The cut is not cut upon desired angle | - Securing lever is loosened. | Check the securing lever efficiency and carry out its adjustment according to chapter „Servicing and adjustment“. |
| | - Set angle does not match the cut angle. | Check the angle adjustment with a protractor and possibly set it according to chapter „Servicing and adjustment“. |
| | - Insufficient saw band stretching. | Stretch the saw band and set the limit switch according to chapter „Servicing and adjustment“. |
| | - Guiding arm and guiding cube are loosened. | Fasten the guiding arm and the cube. |
| | - Dirt between material and clamping jaw. | Cleanse the material and mating jaw. |
| 3. Short lifetime of the saw band | - Insufficient saw band stretching. | Raise the tightening of the saw band set the scanner of saw band tightening according to chapter „Servicing and adjustment“. |
| | - Worn swarf brush. | Check the swarf brush condition and replace it in case of excessive use as described in chapter „Worn pieces replacement“ |
| | - Wrongly adjusted swarf brush. | Check swarf brush adjustment, set it according to chapter „Servicing and adjustment“ |
| | - Over stretched saw band | Lower stretching of the saw band and set the limit switch of the saw band stretching according to chapter „Servicing and adjustment“ |
| | - Wrongly adjusted hard metal guides. | Check the adjustment of the hard metal guides and carry out adjustment as described in chapter „Servicing and adjustment“ |
| | - Worn hard metal guides of the saw band. | Check the condition of the hard metal guide and if it is too worn, replace hard metal guides according to chapter „Worn pieces replacement“ |

| Problem | Possible causes | Repair |
|---|---|---|
| | - Worn saw band guide bearings. | Check guiding bearings and if you notice some sort of excessive damage, replace them according to chapter„Worn pieces replacement“ |
| | - Wrongly adjusted guiding cubes of the saw band. | Set guiding cube according to chapter „Servicing and adjustment“ |
| | - Wrongly adjusted down feed and saw band speed. | Adjust the feeding and speed of a saw band according to values published by saw band manufacturer. |
| | - Different material quality. | Adjust feeding and speed of a saw band according to desired material (try cut-test). |
| | - Low-class saw band | Replace the saw band (contact your local accessory supplier for more information) |
| | - Wrongly chosen saw band tooth system. | Replace the saw band and keep instructions of the manufacturer on the choice. |
| | - Wrongly adjusted tracking. | Check the space between top of a saw band and driving wheel. Perhaps adjust the tracking as described in chapter „Servicing and adjustment“ |
| 4. Insufficient cut output. | - Worn saw band. | Replace the saw band and keep instructions of the manufacturer on the choice. |
| | - Wrong saw band tooth system. | Replace the saw band and keep instructions of the manufacturer on the choice. |
| | - Wrongly set down feed and speed of a saw band. | Set feed and speed of a saw band according to values published by saw band manufacturer. |
| 5. The cut is not finished. | - Wrongly adjusted lower stop point of the saw frame. | Check lower limit switch and screw. |
| | - Stop point surface is messed-up. | Cleanse stop point surface of the limit switch from debris and residue material. |
| 6. By choke is not possible turn | - Metal clamps between valve and panel. | Clamps must be removed and put on the shaft O-Ring about 10x2 mm. |
| | - Metal clams are in body of valve. | Valve must be cleared or changed. |
| 7. Saw band drive cannot be started. | - Pressure switch is adjusted wrong. | Set the pressure switch according to chapter „Servicing and adjustment“ |
| | - Pressure switch is defective. | Replace defective parts of the pressure switch. |
| 8. The saw bands are cracked. | - In stretching wheel is wrong adjusting geometry. | Adjust distance band from recess wheel c.2 mm according to operating instructions. |
| | - Hard metal plates of circuit saw band are not adjusting. | Hard metal plates of circuit saw band must be adjusting according to operating instructions. |
| | - Guiding cubes are not adjusting (bearings + hard metal circuit) | Guiding cubes must be adjusting (bearings + hard metal circuit) according to operating instructions. |
| | - Bearings of guiding cubes are used (rolling elements are damaged or outside ring of bearing has conical form). | Bearings of guiding cubes must be replaced. Bearings must be adjusting according to operating instructions. |
| 9. Damage tooth system of the saw band | - In gripping the lifting cylinder is backlash. | |
| | - Squeezed pin upper or downer holder of the lifting cylinder. | Exchange complete upper or downer holder of lifting cylinder. |
| 10. The saw is cut downing. | - Geometry of hardmetal guiding cubes is wrong adjusted. | Hardmetal guiding cubes must be adjusted. |
| | - Bearings of guiding cubes are used. | Bearings of guiding cubes must be replaced. |
| 11. Cleansing of the saw band is not functional. | - Elastic wheel of the brush drive is worn-down. | Elastic wheel of the brush must be changed. |
| | - Knurling of the driving wheel is worn-down. | Driving wheel must be changed. |
| | - The shaft of the brush drive is rusted. | The shaft of the brush must be cleaned and oiled. |

| Problem | Possible causes | Repair |
|---|---|---|
| | - The brush position and the brush cover is adjusted wrong – with the brush cannot be turned. | The brush cover must be posed, in order to the brush can be turned. |
| 12. The saw arm periodically rise and fall during the cut; this cause short lifetime of the saw band. | - Backslash in driving wheel lodgement on the shaft. | Change the driving shaft for a long one, new bearings, distance ring, new driving wheel, spring, two covers on the forehead of the shaft + screws. |
| | - Worn channel for spring. | |

## 5.2. Electric problems

| Problem | Possible causes | Repair |
|---|---|---|
| 1. Machine is not possible start. | - In socket is not voltage | Line voltage must be checked. |
| | - Transfer relay is closed (thermal protector) | Each FA relay must be checked. |
| | - Limit switch of saw band stretching, cover of frame or cover of saw band is not started. | Check of saw band stretching and covers closing. |
| 2. When cut is finished, the frame is not raising. | - Bottom limit switch is adjusted wrong. | Bottom limit switch must be adjusted according to chapter ADJUSTING. |
| | - In hydraulic (pneumatic) ring is error. HYTOS (BOSCH) is not acting to frame uplift. | Function of magnetic valve must be checked, valve must be closed, voltage of clamps and inductor must be checked. |
| 3. Electric motor and pump are without voltage. Between contactor and thermal protector is not voltage. | - Wrong contactor. | Replace contactor of engine. |
| 4. The indicator of speed saw band is not functional. | - Sensor of speed is not adjusted. | Sensor of speed must be adjusted. |
| | - Defective display | The display must be changed. |
| | - Wrong sensor – diode of indicator speed is not light. | Sensor must be changed and adjusted. |
| 5. Protector is switched off from engine hydraulic aggregate MA3 sometimes. | - Into hydraulic system is high working pressure. | Service engineer must reduce the pressure in hydraulic system. |
| 6. The hydraulic aggregate cannot be started | Auxiliary contact on thermo-relay FA1 is defective. | Replace the defective contact on motor starter FA1. |
| 7. Hydraulic aggregate is switched on but the saw arm or the main vice is not functional | - Wrong connection of electrical supply. The electrical phases are connected conversely. | The phases must be switched. Only service engineer can do this. |
| 8. Cooling is not active | Lack of cooling agent. | Fill the tank with cooling agent. |
| | - Thermal relay is defective | Change the thermal relay |
| | - Input hosepipe is broken or obstructed. | Check the cooling circuit and perhaps cleanse cooling system. |
| | - Cooling pump protection is defective | Check the protection of cooling pump if need change it. |
| | - Cooling pump is defective. | Replace the cooling pump. |

## 5.3. Hydraulic problems

| Problem | Possible causes | Repair |
|---|---|---|
| 1. Hydrogenerator not supplying oil | • reverse rotation | Check the connections of each phase. Reconnect properly connection of the electrical phases. |
| | • shortage of oil in the tank | Add hydraulic oil |
| | • Oil viscosity does not correspond prescribed viscosity value | Change hydraulic oil. |
| | • Hydrogenerator malfunction | Call service |
| | • Wrong power supply connection. | Check the connections of each phase. Reconnect properly connection of the electrical phases. |
| 2. Hydraulic oil contains bubbles | • Hydraulic circuit is not adequately deaerated | Make deaeration of hydraulic circuit. |
| | • Low oil level | Add hydraulic oil |
| | • the pump shaft seals damaged | Call service |
| 3. Increased mechanical noise | • damaged joint drive | Call service |
| | • damaged or destroyed motor bearings | Call service |
| | • air intake | Check for leaks. |
| 4. Low pressure, pump supplies oil | • problem in the safety valve | Wrong settings. Check the settings and adjust the safety valve. |
| | • pump wear | Call service |
| | • external or internal leakage | Call service |
| 5. Hydrogenerator is seized | • damage by solid particles in oil | Make oil filtration, or call the service. |
| | • non-prescribed oil | Change hydraulic oil. |
| | • wrong type of oil | Change hydraulic oil. |
| | • exceeding the life of the pump | Call service |
| 6. Overheating oil | • cooler malfunction | Check the cooler function or call service. |
| | • wear the pump, the energy is converted into heat | Call service |
| 7. Hydraulic valve can not be readjusted | • electromagnet has no signal (voltage) - interrupted supply lines | Check again. |
| | • Electromagnet coil burnt | Replace coil – Call service. |
| | • spool valve sticking | Replace valve – Call service |

# 6. Schémata / Schemas / Schematics

## 6.1. Elektrické schema / Elektroschema / Wiring diagrams

### 6.1.1. 3x400V + PE (+N), 50 Hz

# Obsah / Table of contents / Inhalt


| Strana<br>Page<br>Seite | Název strany<br>Page name<br>Seitenname | Datum<br>Date<br>Datum |
|---|---|---|
| 1 | Úvodní strana / Start page / Startseite | 31.10.2016 |
| 2 | Obsah / Table of contents / Inhaltsverzeichnis | 31.10.2016 |
| 3 | Kusovník artiklů / Parts list / Artikelstückliste | 13.5.2016 |
| 3.a | Kusovník artiklů / Parts list / Artikelstückliste | 13.5.2016 |
| 3.b | Kusovník artiklů / Parts list / Artikelstückliste | 13.5.2016 |
| 3.c | Kusovník artiklů / Parts list / Artikelstückliste | 13.5.2016 |
| 3.d | Kusovník artiklů / Parts list / Artikelstückliste | 31.10.2016 |
| 3.e | Kusovník artiklů / Parts list / Artikelstückliste | 31.10.2016 |
| 4 | I/O řídící systém / I/O Control station / I/O Steuerung | 31.10.2016 |
| 5 | Ovládací panel OP1 / Control panel OP1 / Bedienpult OP1 | 24.3.2016 |
| 6 | Rozmístění prvků v rozvaděči R1 / Placement of elements in enclosure R1 / Platzierung der Elemente im Schaltschrank R1 | 31.10.2016 |
| 7 | Silová část M1 / Power part M1 / Feld partie M1 | 31.10.2016 |
| 8 | Silová část M2, M3 / Power part M2, M3 / Feld partie M2, M3 | 31.10.2016 |
| 9 | Deska zdroje / Power board / Netzgerat-Platte | 31.10.2016 |
| 10 | Stykače motorů, M5/Motor contactor, M5/Motor-Schutzschalter, M5 | 24.3.2016 |
| 11 | Hydraulické ventily / Hydraulic valve / Hydroventil | 13.5.2016 |
| 12 | Vstupy / Inputs / Eingänge | 13.5.2016 |
| 13 | Tlačítka ovládací panel / Button control panel / Taste Bedienpult | 13.5.2016 |
| 14 | Bezpečnostní okruh / Safety circle / Sicherheitsbereich | 13.5.2016 |
| 15 | Řídící systém / Control system / Steuersystem | 13.5.2016 |
| 16 | Příslušenství / Accessories / Zubehör | 13.5.2016 |
| 17 | SyncFree / SyncFree / SyncFree | 13.5.2016 |

# Kusovník artiklů / Parts list / Stückliste

| Označení přístroje<br>Device identification<br>Geräteidentifikation | Typ přístroje<br>Device description<br>Gerätebeschreibung | Objednací číslo<br>Type number<br>Typennummer | Výrobce<br>Manufacturer<br>Hersteller | Skladové číslo<br>Part number<br>Lagernummer | Množství<br>Quantity<br>Menge | Umístění<br>Location<br>Stelle |
|---|---|---|---|---|---|---|
| -ZD1 | Napájecí zdroj - 15VAC/24VDC; 20VAC/28VDC<br>Power supply unit - 15VAC/24VDC; 20VAC/28VDC<br>Netzteil - 15VAC/24VDC; 20VAC/28VDC | ZDR-03 | Bomar | 265.915 | 1 | /9.2 |
| -BM1 | Bezpečnostní relé 24VDC, 3NO<br>Safety relay 24VDC, 3NO<br>Sicherheitsrelais 24VDC, 3NO | BT50 | ABB | 91.051.063 | 1 | /14.5 |
| -CU1 | Klávesnice - fóliová<br>Touch-sensitive keyboard<br>Folientastatur | 31.R230-207 | AKI ELECTRONIC,spol.s.r.o. | 31.R230-207 | 1 | /15.0 |
| -SN1 | Snímač výšky ramene<br>Arm height sensor<br>Arm Höhensensor | DHB | ASTP | 251.232 | 1 | /12.8 |
| -FU1 | Pojistka trubičková - 2A/250V, pomalá, 5x20<br>Tube fuse - 2A/250V, slow, 5x20<br>Rohrsicherung - 2A / 250V, langsam, 5x20 | T2A/250V | ESKA | 91.230.001 | 1 | /9.1 |
| -FU2 | Pojistka trubičková - 2A/250V, pomalá, 5x20<br>Tube fuse - 2A/250V, slow, 5x20<br>Rohrsicherung - 2A / 250V, langsam, 5x20 | T2A/250V | ESKA | 91.230.001 | 1 | /9.1 |
| -FU3 | Pojistka trubičková - 500mA/250V, pomalá, 5x20<br>Tube fuse - 500mA/250V, slow, 5x20<br>Rohrsicherung - 500 mA / 250 V, langsam, 5x20 | T500mA/250V | ESKA | 91.230.011 | 1 | /9.4 |
| -FU7 | Pojistka trubičková - 6,3A/250V, pomalá, 5x20<br>Tube fuse - 6,3A/250V, slow, 5x20<br>Rohrsicherung - T6,3A / 250V, langsam, 5x20 | T6,3A/250V | ESKA | 91.230.002 | 1 | /9.4 |
| -RP1 | Potenciometr 4k7<br>Potenciometer 4k7<br>Potentiometer 4k7 | TP195 4k7/N20A | Elektronické součástky CZ, a.s | 91.283.015 | 1 | /8.8 |
| -RP1 | Hlavice potenciometru - 24mm<br>Head of potentiometer 24mm<br>Leiter Potentiometer 24mm | S8877 BLK | GES-ELECTRONICS, a.s. | 91.060.063 | 1 | /8.8 |
| -RCF1 | Filtr RFC vývodový<br>Efferent RFC filter<br>Ableitenden RFC Filter | FBOPR1624 | Ing. Miroslav Vlček | 91.041.015 | 1 | /7.3 |
| -RCF2 | Filtr RFC vývodový<br>Efferent RFC filter<br>Ableitenden RFC Filter | FBOPR1624 | Ing. Miroslav Vlček | 91.041.015 | 1 | /8.0 |

The manufacturer reserves right to use an equivalent replacement device.

2

# Kusovník artiklů / Parts list / Stückliste

| Označení přístroje<br>Device identification<br>Geräteidentifikation | Typ přístroje<br>Device description<br>Gerätebeschreibung | Objednací číslo<br>Type number<br>Typennummer | Výrobce<br>Manufacturer<br>Hersteller | Skladové číslo<br>Part number<br>Lagernummer | Množství<br>Quantity<br>Menge | Umístění<br>Location<br>Stelle |
|---|---|---|---|---|---|---|
| -RCF11 | Filtr RFC vývodový<br>Efferent RFC filter<br>Ableitenden RFC Filter | FBOPR1624 | Ing. Miroslav Vlček | 91.041.015 | 1 | /7.6 |
| -RCF12 | Filtr RFC vývodový<br>Efferent RFC filter<br>Ableitenden RFC Filter | FBOPR1624 | Ing. Miroslav Vlček | 91.041.015 | 1 | /7.8 |
| -FA1 | Motorový spouštěč 0,16A<br>Motor starter 0,16A<br>Motorstarter 0,16 | MS116-0,16A | ABB | 91.045.015 | 1 | /7.4 |
| -FA1 | Pomocné kontakty - 1xNO+1xNC<br>Auxiliary contacts - 1xNO+1xNC<br>Hilfskontakte - 1xNO+1xNC | HKF1-11 | ABB | 91.046.002 | 1 | /7.4 |
| -FA2 | Motorový spouštěč - 1A<br>Motor starter - 1A<br>Motorstarter - 1A | MS116-1,00 | ABB | 91.045.019 | 1 | /8.1 |
| -FA2 | Pomocné kontakty - 1xNO+1xNC<br>Auxiliary contacts - 1xNO+1xNC<br>Hilfskontakte - 1xNO+1xNC | HKF1-11 | ABB | 91.046.002 | 1 | /8.1 |
| -FU1 | Svorka pojistková<br>Fuse terminal<br>Sicherungsklemme | WK4/THSi5U | WIELAND | 91.251.102 | 1 | /9.1 |
| -FU2 | Svorka pojistková<br>Fuse terminal<br>Sicherungsklemme | WK4/THSi5U | WIELAND | 91.251.102 | 1 | /9.1 |
| -FU3 | Svorka pojistková<br>Fuse terminal<br>Sicherungsklemme | WK4/THSi5U | WIELAND | 91.251.102 | 1 | /9.4 |
| -FU4 | Svorka pojistková<br>Fuse terminal<br>Sicherungsklemme | WK4/THSi5U | WIELAND | 91.251.102 | 1 | /9.4 |
| -FU4 | Pojistka trubičková - 800mA/250V, pomalá, 5x20<br>Tube fuse - 800A/250V, slow, 5x20<br>Rohrsicherung - 800A / 250V, langsam, 5x20 | T800mA/250V | ESKA | 91.230.010 | 1 | /9.4 |
| -FU5 | Svorka pojistková<br>Fuse terminal<br>Sicherungsklemme | WK4/THSi5U | WIELAND | 91.251.102 | 1 | /9.4 |

The manufacturer reserves right to use an equivalent replacement device.

3

# Kusovník artiklů / Parts list / Stückliste

| Označení přístroje<br>Device identification<br>Geräteidentifikation | Typ přístroje<br>Device description<br>Gerätebeschreibung | Objednací číslo<br>Type number<br>Typennummer | Výrobce<br>Manufacturer<br>Hersteller | Skladové číslo<br>Part number<br>Lagernummer | Množství<br>Quantity<br>Menge | Umístění<br>Location<br>Stelle |
|---|---|---|---|---|---|---|
| -FU5 | Pojistka trubičková - 1A/250V, pomalá, 5x20<br>Tube fuse - 1A/250V, slow, 5x20<br>Rohrsicherung - 1A / 250V, langsam, 5x20 | T1A/250V | ESKA | 91.230.031 | 1 | /9.4 |
| -FU6 | Svorka pojistková<br>Fuse terminal<br>Sicherungsklemme | WK4/THSi5U | WIELAND | 91.251.102 | 1 | /9.4 |
| -FU6 | Pojistka trubičková - 200mA/250V, pomalá, 5x20<br>Tube fuse - 200mA/250V, slow, 5x20<br>Rohrsicherung - 160mA / 250V, langsam, 5x20 | T200mA/250V | ESKA | 91.230.037 | 1 | /9.4 |
| -FU7 | Svorka pojistková<br>Fuse terminal<br>Sicherungsklemme | WK4/THSi5U | WIELAND | 91.251.102 | 1 | /9.4 |
| -FU8 | Pojistka trubičková - 200mA/250V, pomalá, 5x20<br>Tube fuse - 200mA/250V, slow, 5x20<br>Rohrsicherung - 160mA / 250V, langsam, 5x20 | T200mA/250V | ESKA | 91.230.037 | 1 | /16.1 |
| -FU8 | Svorka pojistková<br>Fuse terminal<br>Sicherungsklemme | WK4/THSi5U | WIELAND | 91.251.102 | 1 | /16.1 |
| -FU9 | Pojistka trubičková - 200mA/250V, pomalá, 5x20<br>Tube fuse - 200mA/250V, slow, 5x20<br>Rohrsicherung - 160mA / 250V, langsam, 5x20 | T200mA/250V | ESKA | 91.230.037 | 1 | /16.9 |
| -FU9 | Svorka pojistková<br>Fuse terminal<br>Sicherungsklemme | WK4/THSi5U | WIELAND | 91.251.102 | 1 | /16.9 |
| -HL1 | Signálka zelená na adaptér<br>Green light for Eaton adapter<br>Grünes Licht für Eaton-Adapter | M22-LED-G | EATON | 91.061.023 | 1 | /10.4 |
| -KM1 | Ministýkač 4kW/400V<br>Minicontactor 4kW/400V<br>Minischutz 4kW/400V | B6S-30-01-1.7-71 | ABB | 91.040.049 | 1 | /10.1 |
| -KM2 | Ministýkač 4kW/400V<br>Minicontactor 4kW/400V<br>Minischutz 4kW/400V | B6S-30-01-1.7-71 | ABB | 91.040.049 | 1 | /10.3 |
| -KM11 | Ministýkač 4kW/400V<br>Minicontactor 4kW/400V<br>Minischutz 4kW/400V | B6S-30-01-1.7-71 | ABB | 91.040.049 | 1 | /14.7 |

The manufacturer reserves right to use an equivalent replacement device.

3.a

# Kusovník artiklů / Parts list / Stückliste

| Označení přístroje<br>Device identification<br>Geräteidentifikation | Typ přístroje<br>Device description<br>Gerätebeschreibung | Objednací číslo<br>Type number<br>Typennummer | Výrobce<br>Manufacturer<br>Hersteller | Skladové číslo<br>Part number<br>Lagernummer | Množství<br>Quantity<br>Menge | Umístění<br>Location<br>Stelle |
|---|---|---|---|---|---|---|
| -KM11 | Pomocné kontakty - 1xNO+1xNC<br>Auxiliary contacts - 1xNO+1xNC<br>Hilfskontakte - 1xNO+1xNC | CAF 6-11M | ABB | 91.041.042 | 1 | /14.7 |
| -KM12 | Ministýkač 4kW/400V<br>Minicontactor 4kW/400V<br>Minischutz 4kW/400V | B6S-30-01-1.7-71 | ABB | 91.040.049 | 1 | /14.8 |
| -KM12 | Pomocné kontakty - 1xNO+1xNC<br>Auxiliary contacts - 1xNO+1xNC<br>Hilfskontakte - 1xNO+1xNC | CAF 6-11M | ABB | 91.041.042 | 1 | /14.8 |
| -PA1 | Pojistkový odpínač pro válcové vložky - 3P<br>Switch fuse for the cylinder inserts - 3P<br>Schalter Sicherung für den Zylindereinsätze - 3P | E 93/32 | ABB | 91.241.014 | 1 | /8.4 |
| -QS1 | Rukojeť odpínače - černá<br>Handle switch - black<br>Griffschalter - schwarz | OHBS2RJ | ABB | 91.180.015 | 1 | /7.0 |
| -QS1 | Kryt svorek<br>Terminal shroud<br>Klemmenabdeckung | OTS40T3 | ABB | 91.170.017 | 1 | /7.0 |
| -RP1 | Svorka rychloupínací<br>Fastconnect clamp<br>Fast Connect Klemm | WAGO 224-112 | WAGO | 91.250.009 | 3 | /8.8 |
| -SA1 | Hlavice 3 polohového přepínače<br>Head of 3 position switch<br>Leiter der 3-Positionsschalter | M22-WRK3 | EATON | 91.060.051 | 1 | /13.5 |
| -SA1 | Kontaktní blok - 1NO<br>Contact block - 1NO<br>Kontaktblock - 1NO | M22-K10 | EATON | 91.061.022 | 1 | /13.5 |
| -SA1 | Upevňovací adaptér + 1NO<br>Attaching adapter + 1NO<br>Montageadapter + 1NO | M22-AK10 | EATON | 91.061.021 | 1 | /13.5 |
| -SA2 | Hlavice tlačítka - černá<br>Head button - black<br>Kopftaste - schwarz | M22-D-S | EATON | 91.060.035 | 1 | /16.1 |
| -SA2 | Upevňovací adaptér + 1NO<br>Attaching adapter + 1NO<br>Montageadapter + 1NO | M22-AK10 | EATON | 91.061.021 | 1 | /16.1 |

The manufacturer reserves right to use an equivalent replacement device.

3.b

# Kusovník artiklů / Parts list / Stückliste

| Označení přístroje<br>Device identification<br>Geräteidentifikation | Typ přístroje<br>Device description<br>Gerätebeschreibung | Objednací číslo<br>Type number<br>Typennummer | Výrobce<br>Manufacturer<br>Hersteller | Skladové číslo<br>Part number<br>Lagernummer | Množství<br>Quantity<br>Menge | Umístění<br>Location<br>Stelle |
|---|---|---|---|---|---|---|
| -SB1 | Hlavice prosvětleného tlačítka zelená<br>Green transparent switch<br>Grün transparent Schalter | M22-DL-G | EATON | 91.060.031 | 1 | /13.3 |
| -SB1 | Upevňovací adaptér + 1NO<br>Attaching adapter + 1NO<br>Montageadapter + 1NO | M22-AK10 | EATON | 91.061.021 | 1 | /13.3 |
| -SB2 | Upevňovací adaptér + 1NO<br>Attaching adapter + 1NO<br>Montageadapter + 1NO | M22-AK10 | EATON | 91.061.021 | 1 | /13.4 |
| -SB2 | Hlavice tlačítka - černá<br>Head button - black<br>Kopftaste - schwarz | M22-D-S | EATON | 91.060.035 | 1 | /13.4 |
| -SB3 | Upevňovací adaptér + 1NO<br>Attaching adapter + 1NO<br>Montageadapter + 1NO | M22-AK10 | EATON | 91.061.021 | 1 | /14.6 |
| -SB3 | Hlavice prosvětleného tlačítka žlutá<br>Yellow trasparent switch<br>Leiter beleuchtet gelbe Taste | M22-DL-Y | EATON | 91.060.053 | 1 | /14.6 |
| -SB501 | Total stop - hlavice + 3xNC<br>Emergency-stop mushroom push - button + 3xNC<br>Not-Aus-Pilz - Taster + 3 xNC | YW1B-V4E02R | IDEC | 91.060.084 | 1 | /14.4 |
| -SB501 | Kontakt - 1x NO<br>Contact - 1x NO<br>Kontakt - 1x NO | YW-E10 | IDEC | 91.061.044 | 1 | /14.4 |
| -TR1 | Toroidal transformer - 0-230-400V/20V/15V, 150VA<br>Toroidal transformer - 0-230-400V/20V/15V, 150VA<br>Ringkerntransformator - 0-230V-400V/20V/15V, 150VA | 400V/230V/20V/15V 6A/2A 150VA | KARBAN s.r.o. | 91.080.026 | 1 | /9.2 |
| -SQ21 | Bezpečnostní koncový spínač - 2xNC<br>Safety Limit Switch - 2x NC<br>Sicherheitsendschalter - 2x NC | QKS8 | KEDU | 91.173.012 | 1 | /14.4 |
| -PA1 | Pojistka válcová - 12A, 10x38, rychlá<br>Tube fuse - 12A, 10x38, fast<br>Rohrsicherung - 12A, 10x38, schnell | PV10 12A gG | OEZ | 91.231.007 | 1 | /8.4 |
| -SQ1 | Koncový spínač - 1NC+1NO<br>Limit switch - 1NC+1NO<br>Endschalter - 1NC+1NO | D4N-4A31 | OMRON | 91.173.007 | 1 | /12.2 |

The manufacturer reserves right to use an equivalent replacement device.

3.c

# Kusovník artiklů / Parts list / Stückliste

| Označení přístroje<br>Device identification<br>Geräteidentifikation | Typ přístroje<br>Device description<br>Gerätebeschreibung | Objednací číslo<br>Type number<br>Typennummer | Výrobce<br>Manufacturer<br>Hersteller | Skladové číslo<br>Part number<br>Lagernummer | Množství<br>Quantity<br>Menge | Umístění<br>Location<br>Stelle |
|---|---|---|---|---|---|---|
| -SQ2 | Koncový spínač - 1NC+1NO<br>Limit switch - 1NC+1NO<br>Endschalter - 1NC+1NO | D4N-4A31 | OMRON | 91.173.007 | 1 | /12.3 |
| -FM1 | Frekvenční měnič - 3.7kW, 3x400VAC<br>Frequency converter - 3.7kW, 3x400VAC<br>Frequenzumrichter - 3,7 kW, 3x400VAC | VFD037E43A | DELTA ELECTRONICS, INC. | 91.012.094 | 1 | /8.4 |
| -QS1 | 3 pólový odpínač, 16A<br>Disconnector - 3P, 16A<br>Trennschalter - 3P, 16A | OT16FT3 | ABB | 91.170.018 | 1 | /7.0 |
| -CU1 | Řídící obvod<br>Control circuit<br>Die Steuerschaltung | PRO-5.X | Bomar | 91.995.221 | 1 | /15.0 |
| -RCF0 | Vstupní odrušovací filtr 16A<br>Input noise filter 16A<br>Eingangsrauschfilter 16A | 16EB15/50 | WIDECOM TECHNOLOGY s.r.o. | 91.041.062 | 1 | /7.1 |
| -M4 | Ventilátor 24VDC, 154CFM<br>Fan 24VDC, 154CFM<br>Fan 24VDC, 154CFM | RDH1238 B2 | Xinruilian Electronic Co. | 91.015.126 | 1 | /10.6 |

The manufacturer reserves right to use an equivalent replacement device.

3.d

# Transverse 510.330 (D)GH

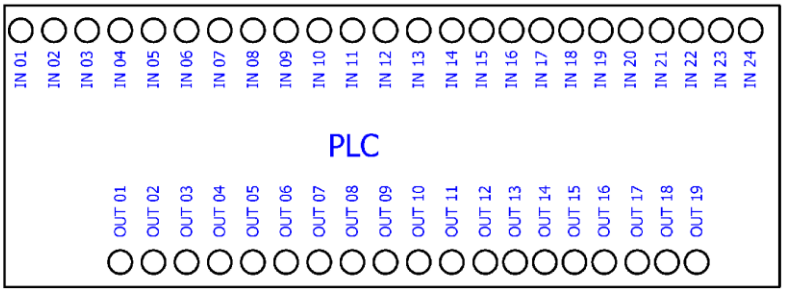


| | |
|---|---|
| HW | |
| FW | |
| | |
| | |
| | |
| | |
| | |
| | |
| | |
| | |

Pohled ze spodu/From under view/Blick nach

| I/O | CZE | ENG | DE |
|---|---|---|---|
| IN 01 | Svěrák upnut | Vice is clamped | Schraubstock ist gespannt |
| IN 02 | Rameno dole | Arm is down | Rahmen ist unten |
| IN 03 | NC | NC | NC |
| IN 04 | Napnutí pásu | Blade tension | Bandspannung |
| IN 05 | Motory OK | Motors OK | Motoren OK |
| IN 06 | Bezpečnostní okruh uzavřen | Safety circle shut down | Sicherheitsschaltung gesperrt |
| IN 07 | Tlačítko TOTAL STOP | Button TOTAL STOP | Taste TOTAL STOP |
| IN 08 | Tlačítko START | Button START | Taste START |
| IN 09 | Tlačítko STOP | Button STOP | Taste STOP |
| IN 10 | MANUAL | MANUAL | MANUAL |
| IN 11 | CYKLUS | CYCLE | ZYKLUS |
| IN 12 | NC | NC | NC |
| IN 13 | NC | NC | NC |
| IN 14 | NC | NC | NC |
| IN 15 | NC | NC | NC |
| IN 16 | NC | NC | NC |
| IN 17 | NC | NC | NC |
| IN 18 | NC | NC | NC |
| IN 19 | NC | NC | NC |
| IN 20 | NC | NC | NC |
| IN 21 | NC | NC | NC |
| IN 22 | NC | NC | NC |
| IN 23 | NC | NC | NC |
| IN 24 | NC | NC | NC |
| | | | |
| OUT 01+<br>OUT 01- | Start FM1 | Start FM1 | Start FM1 |
| OUT 02+<br>OUT 02- | Digitální ukazatel<br>úhlu natočení ramene | Digital indicator<br>rotation angle of the arm | Digitale Anzeige<br>der Winkel des Arms |
| OUT 03+<br>OUT 03- | NC | NC | NC |
| OUT 04 | Motor chlazení | Coolant pump | Motor Kühlung |
| OUT 05 | Čerpadlo hydrauliky | Hydraulic pump | Hydraulikpumpe |
| OUT 06 | NC | NC | NC |
| OUT 07 | Svěrák upnout | Vice clamp | Schraubstock spannen |
| OUT 08 | Svěrák povolit | Release vice | Schraubstock lösen |
| OUT 09 | Rameno nahoru | Arm up | Rahmen nach oben |
| OUT 10 | Rameno dolů | Arm down | Rahmen nach unten |
| OUT 11 | Rameno rychle | Arm fast | Rahmen schnell |
| OUT 12 | NC | NC | NC |
| OUT 13 | Mikronizer | Microniser | Mikronizer |
| OUT 14 | NC | NC | NC |
| OUT 15 | NC | NC | NC |
| OUT 16 | NC | NC | NC |
| OUT 17 | NC | NC | NC |
| OUT 18 | NC | NC | NC |
| OUT 19 | Kontrolka start | Indicator start | Kontrollicht start |

BOMAR, s.r.o.
Těžební 1236/1
CZ 627 00, Brno

Stroj/Machine/Maschine:
Transverse 510.330 (D)GH

Název stránky/Name page/Name seiten:
I/O řídící systém / I/O Control station / I/O Steuerung

Číslo výk./Doc.No/Anzahl der Dokumente: ES-06050-201/202-V6.7
Napájení/Power supply/Einspeisung: 3x400V+PE, 50~Hz
Zpracoval/Processed/Hat verarbeitet: Kostka
Datum/Date/Datum: 31.10.2016
List/Page/Seite: 4
List/Pages/Seiten: 22

3.e

Schémata
Schemas
Schematics

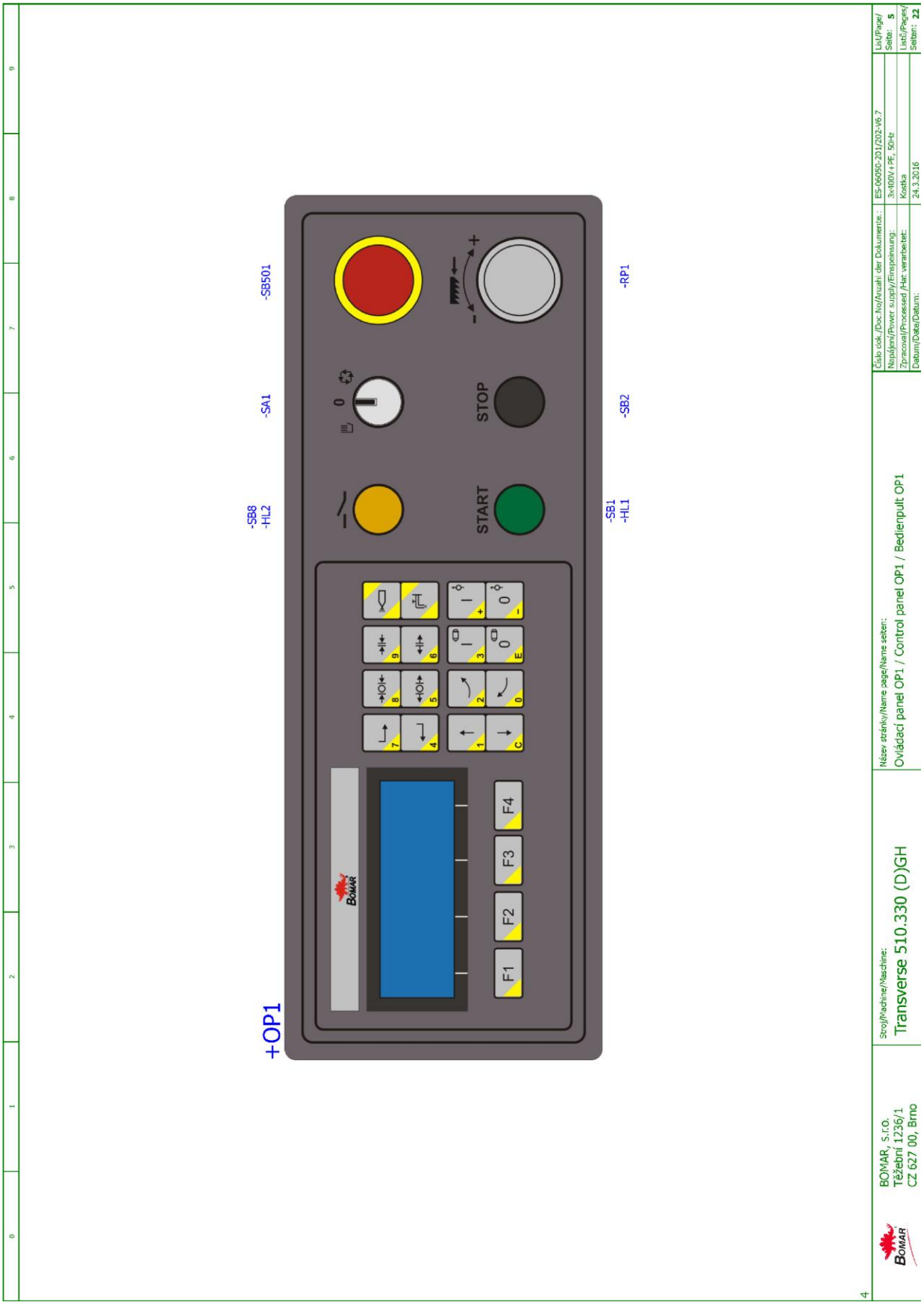
+OP1
-SB8
-HL2
-SA1
-SB501
-SB1
-HL1
-SB2
-RP1
START
STOP
F1
F2
F3
F4
BOMAR
Číslo dok./Doc. ko/Anzahl der Dokumente.:
ES-06050-201/202-V6.7
Napájení/Power supply/Einspeisung:
3x400V+PE, 50Hz
Zpracoval/Processed /Hat verarbeitet:
Kostka
Datum/Date/Datum:
24.3.2016
Listů/Pages/
Seiten: 22
Název stránky/Name page/Name seiten:
Ovládací panel OP1 / Control panel OP1 / Bedienpult OP1
Stroj/Machine/Maschine:
Transverse 510.330 (D)GH
BOMAR, s.r.o.
Těžební 1236/1
CZ 627 00, Brno

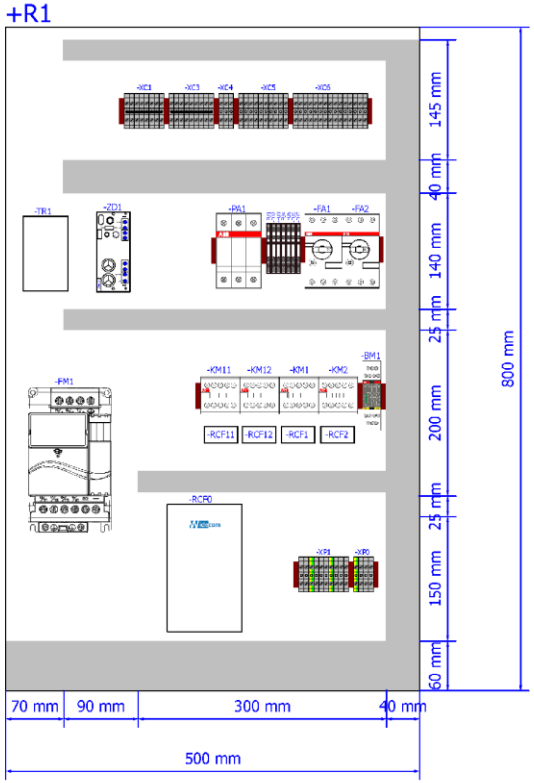


5

| | | | | | |
|---|---|---|---|---|---|
| BOMAR, s.r.o.<br>Těžební 1236/1<br>CZ 627 00, Brno | Stroj/Machine/Maschine:<br>Transverse 510.330 (D)GH | Název stránky/Name page/Name seiten:<br>Rozmístění prvků v rozvaděči R1 / Placement of elements in enclosure R1 / Platzierung der Elemente im Schaltschrank R1 | Číslo dok./Doc.No/Anzahl der Dokumente.: | ES-06050-201/202-V6.7 | List/Page/Seite: 6 |
| | | | Napájení/Power supply/Einspeisung: | 3x400V+PE, 50Hz | Listů/Pages/Seiten: 22 |
| | | | Zpracoval/Processed /Hat verarbeitet: | Kostka | |
| | | | Datum/Date/Datum: | 31.10.2016 | |

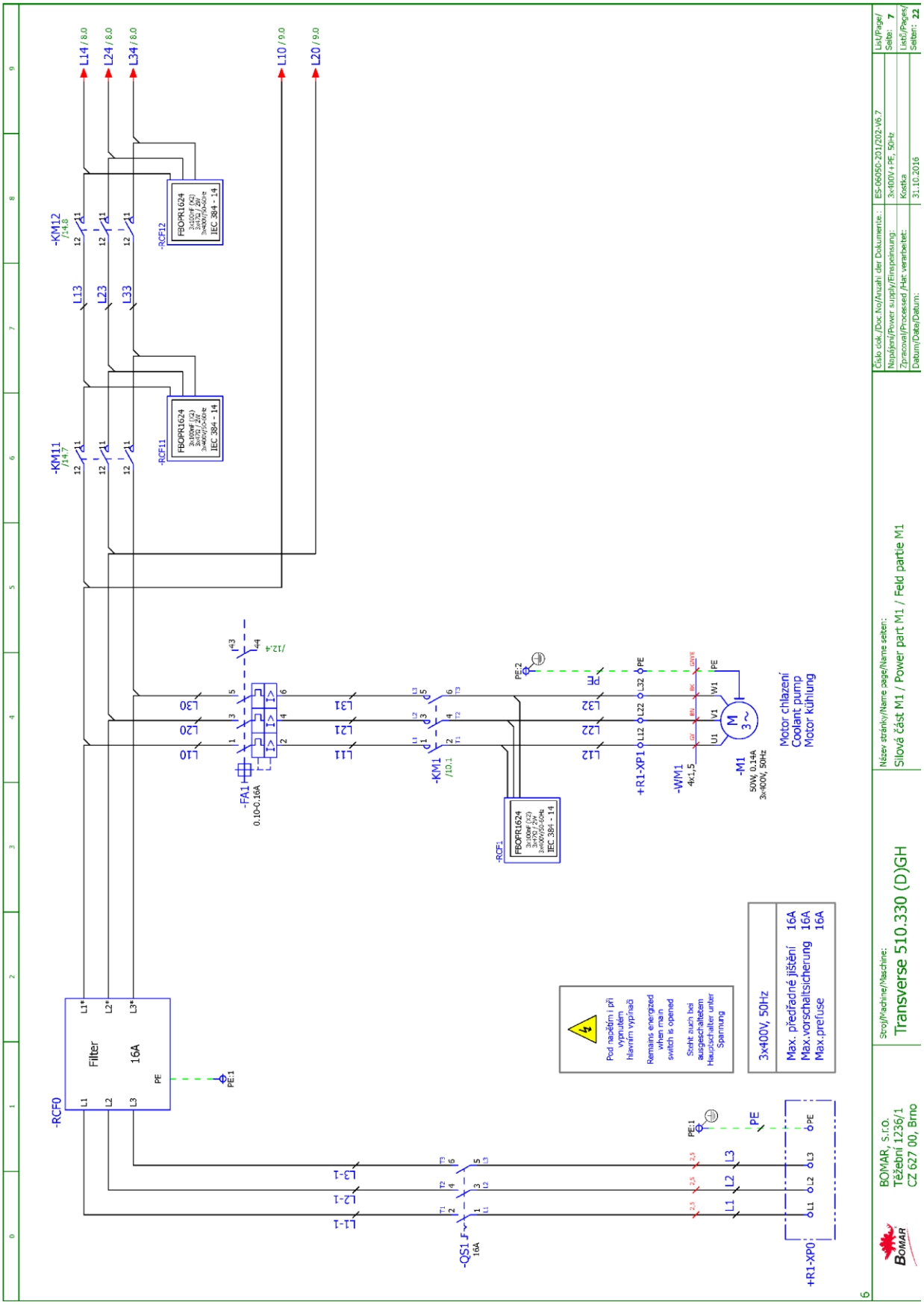
-RCF0
Filter
16A
-QS1
16A
-FA1
0.10-0.16A
-KM11
-KM12
-KM1
-RCF1
-RCF11
-RCF12
FBOPR1624
IEC 384 - 14
-M1
50W, 0.14A
3x400V, 50Hz
-WM1
4x1,5
+R1-XP1
+R1-XP0
Motor chlazení
Coolant pump
Motor kühlung
Pod napětím i při vypnutém hlavním vypínači
Remains energized when main switch is opened
Steht auch bei ausgeschaltetem Hauptschalter unter Spannung
3x400V, 50Hz
Max. předřadné jištění 16A
Max.vorschaltsicherung 16A
Max.prefuse
BOMAR, S.r.o.
Těžební 1236/1
CZ 627 00, Brno
Stroj/Machine/Maschine:
Transverse 510.330 (D)GH
Název stránky/Name page/Name seiten:
Silová část M1 / Power part M1 / Feld partie M1
Číslo dok./Doc.No/Anzahl der Dokumente.:
ES-06050-201/202-V6.7
Napájení/Power supply/Einspeisung:
3x400V+PE, 50Hz
Zpracoval/Processed /Hat verarbeitet:
Kostka
Datum/Date/Datum:
31.10.2016
List/Page/Seite: 7
List/Pages/Seiten: 22

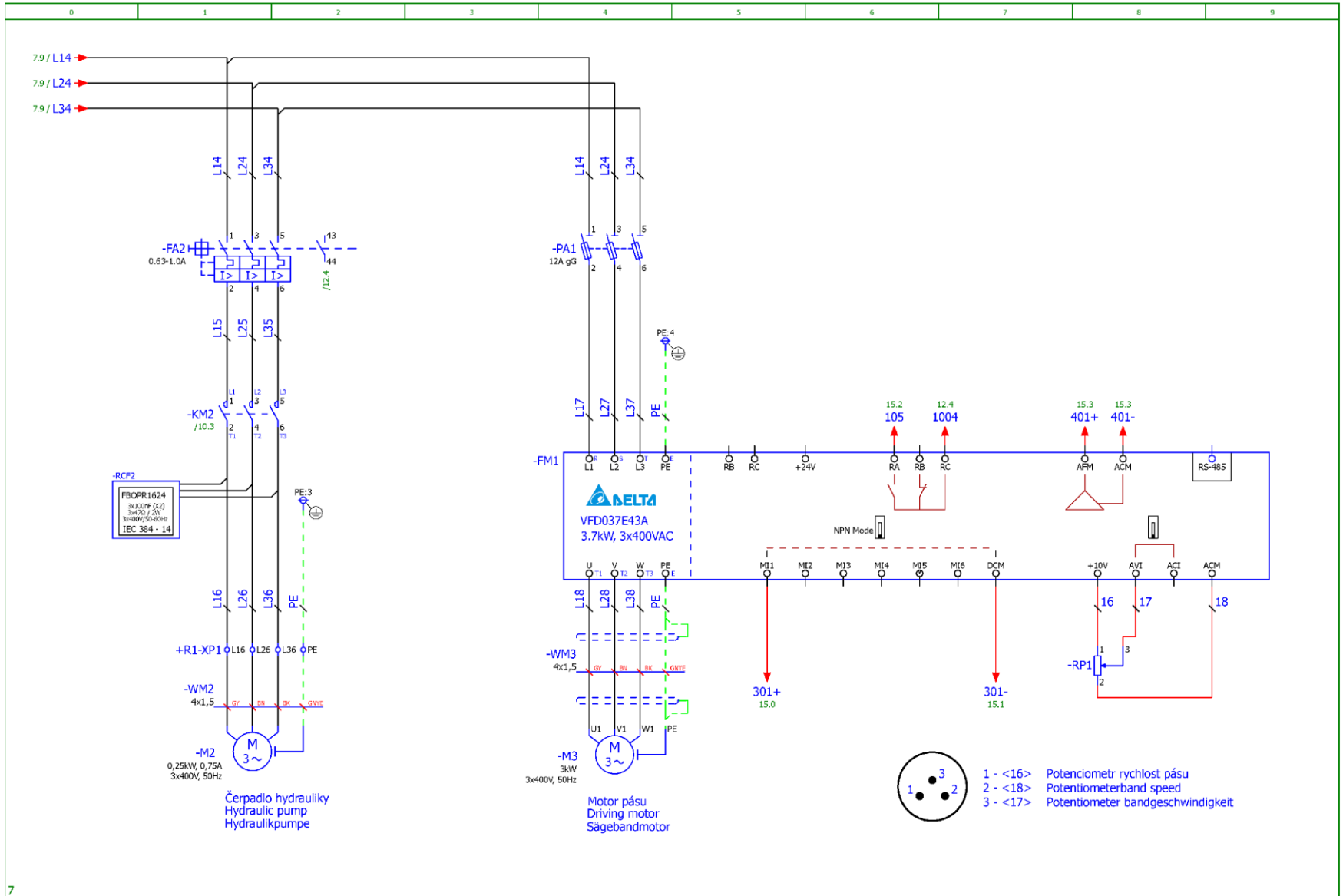


| | | | | |
|---|---|---|---|---|
| BOMAR, s.r.o. Těžební 1236/1 CZ 627 00, Brno | Stroj/Machine/Maschine: Transverse 510.330 (D)GH | Název stránky/Name page/Name seiten: Silová část M2, M3 / Power part M2, M3 / Feld partie M2, M3 | Číslo dok./Doc.No/Anzahl der Dokumente.: ES-06050-201/202-V6.7 | List/Page/Seite: 8 |
| | | | Napájení/Power supply/Einspeinsung: 3x400V+PE, 50Hz | Listů/Pages/Seiten: 22 |
| | | | Zpracoval/Processed /Hat verarbeitet: Kostka | |
| | | | Datum/Date/Datum: 31.10.2016 | |

**Schémata**
**Schemas**
**Schematics**

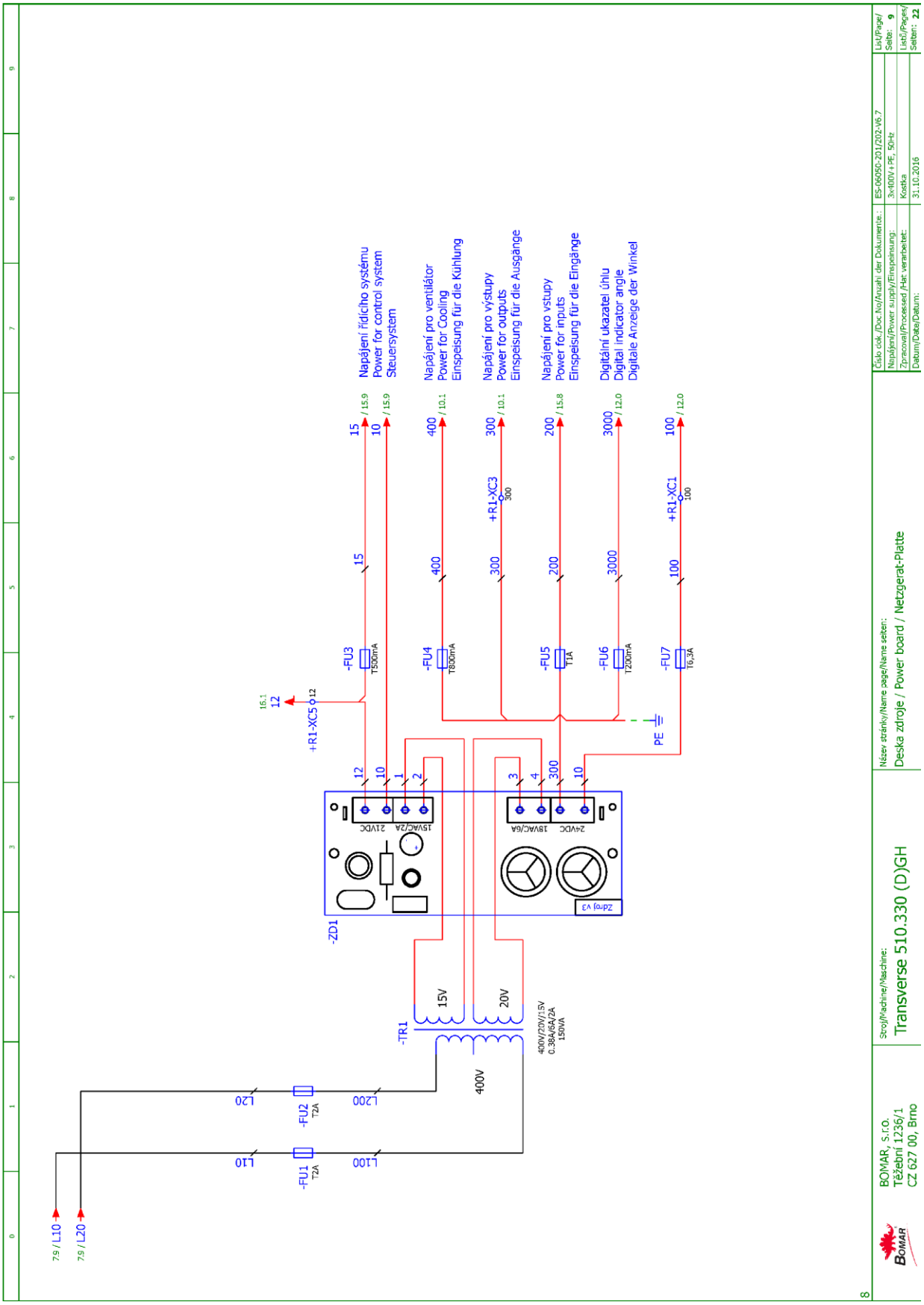
Napájení řídicího systému
Power for control system
Steuersystem
Napájení pro ventilátor
Power for Cooling
Einspeisung für die Kühlung
Napájení pro výstupy
Power for outputs
Einspeisung für die Ausgänge
Napájení pro vstupy
Power for inputs
Einspeisung für die Eingänge
Digitální ukazatel úhlu
Digital indicator angle
Digitale Anzeige der Winkel
-FU3 T500mA
-FU4 T800mA
-FU5 T1A
-FU6 T200mA
-FU7 T6,3A
+R1-XC5
+R1-XC3
+R1-XC1
-ZD1
Zdroj v3
-TR1
400V/20V/15V
0,384-6A/2A
150VA
-FU1 T2A
-FU2 T2A
L10
L20
L100
L200
PE
Číslo dok./Doc.No/Anzahl der Dokumente:
ES-06050-201/202-V6.7
Napájení/Power supply/Einspeisung:
3x400V+PE, 50Hz
Zpracoval/Processed /Hat verarbeitet:
Kostka
Datum/Date/Datum:
31.10.2016
Název stránky/Name page/Name seiten:
Deska zdroje / Power board / Netzgerat-Platte
Stroj/Machine/Maschine:
Transverse 510.330 (D)GH
BOMAR, s.r.o.
Těžební 1236/1
CZ 627 00, Brno
List/Page/Seite: 9
Listů/Pages/Seiten: 22

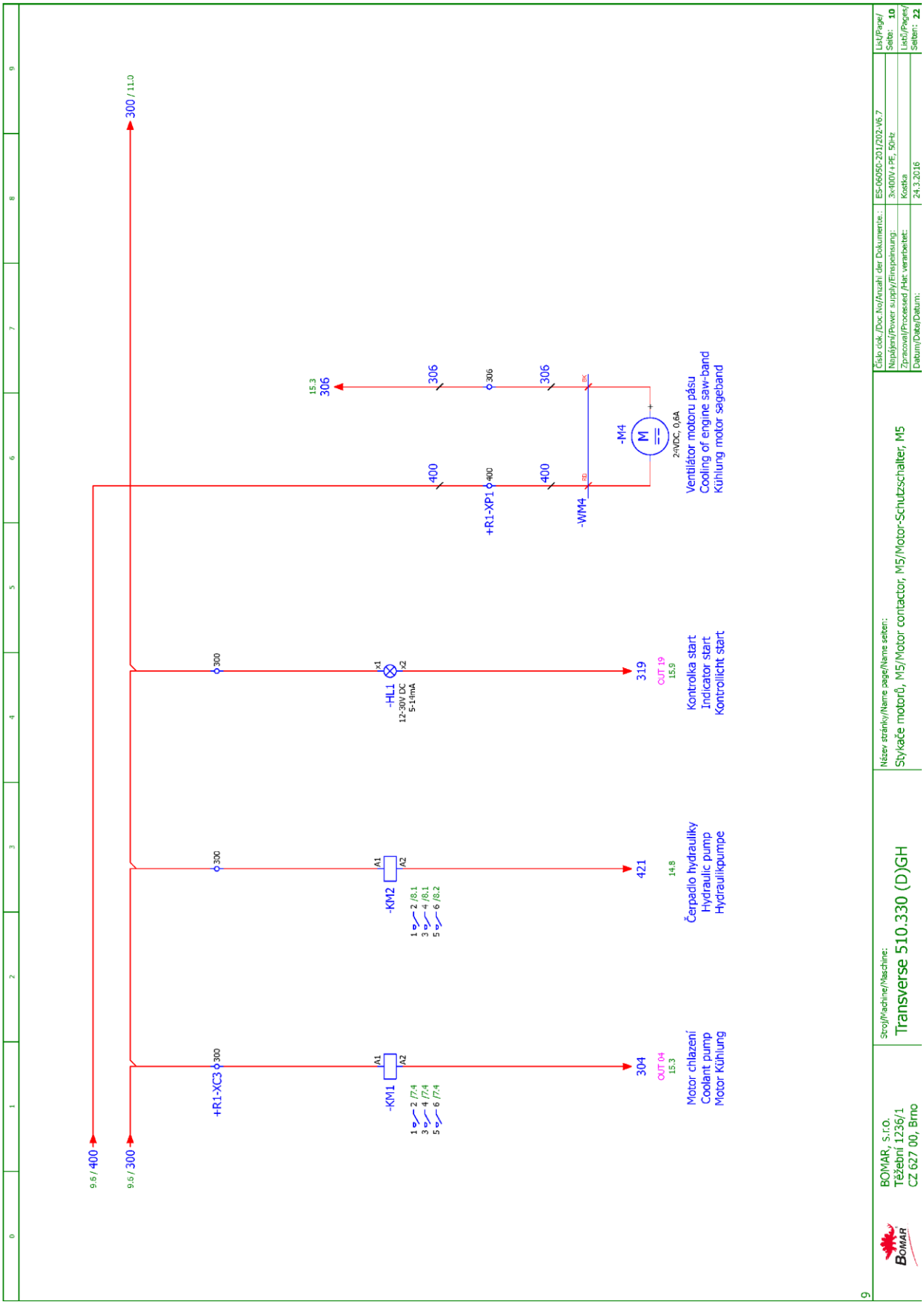


Schémata
Schemas
Schematics

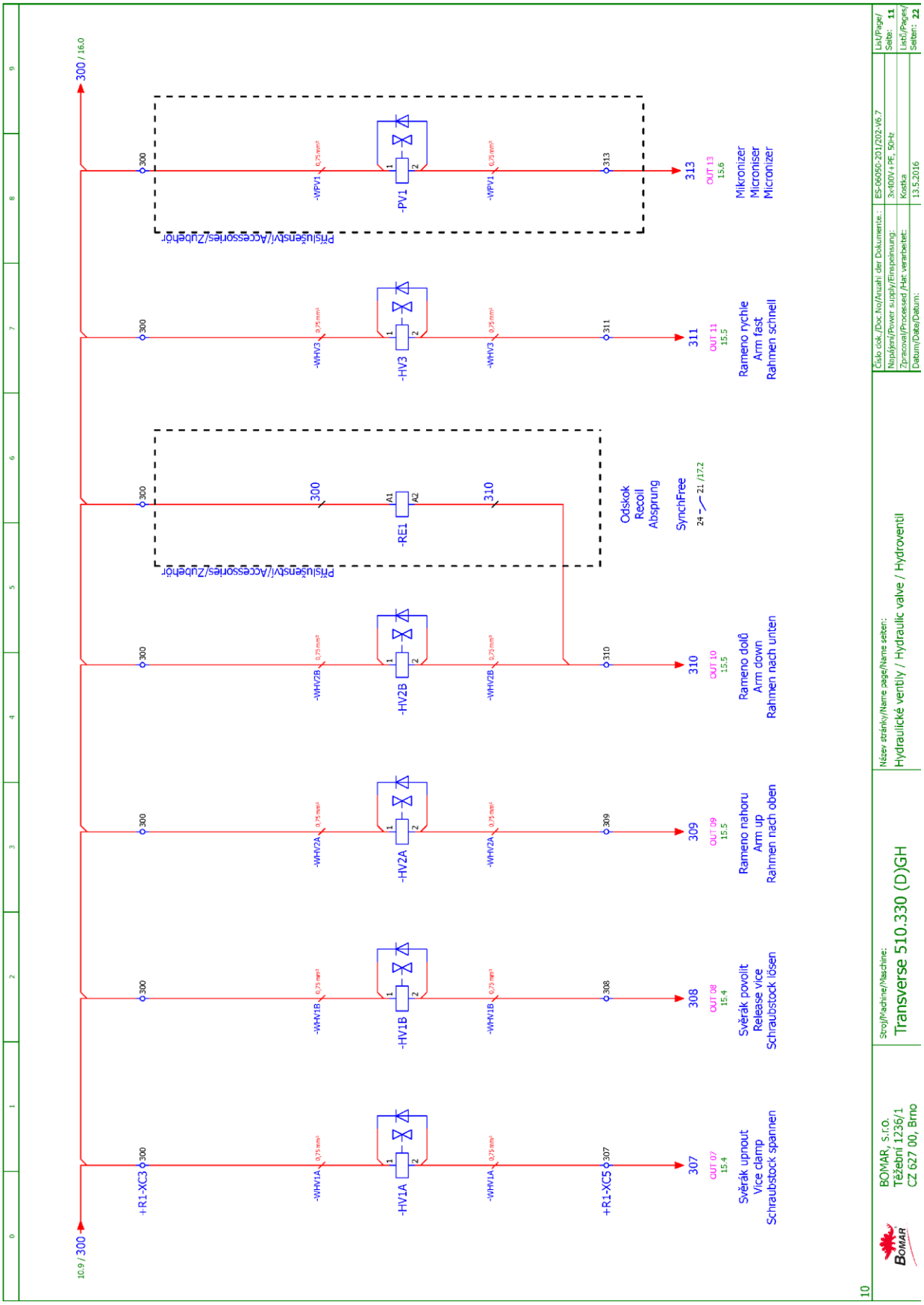
10.9 / 300
300 / 16.0
+R1-XC3
-WHV1A
-HV1A
+R1-XC5
307
OUT 07
15.4
Svěrák upnout
Vice clamp
Schraubstock spannen
-WHV1B
-HV1B
308
OUT 08
15.4
Svěrák povolit
Release vice
Schraubstock lösen
-WHV2A
-HV2A
309
OUT 09
15.5
Rameno nahoru
Arm up
Rahmen nach oben
-WHV2B
-HV2B
310
OUT 10
15.5
Rameno dolů
Arm down
Rahmen nach unten
Příslušenství/Accessories/Zubehör
-RE1
A1
A2
Odskok
Recoil
Absprung
SynchFree
24 → 21 /17.2
-WHV3
-HV3
311
OUT 11
15.5
Rameno rychle
Arm fast
Rahmen schnell
-WPV1
-PV1
313
OUT 13
15.6
Mikronizer
Microniser
Micronizer
BOMAR, s.r.o.
Těžební 1236/1
CZ 627 00, Brno
Stroj/Machine/Maschine:
Transverse 510.330 (D)GH
Název stránky/Name page/Name seiten:
Hydraulické ventily / Hydraulic valve / Hydroventil
Číslo dok./Doc.No/Anzahl der Dokumente:
ES-06050-201/202-V6.7
Napájení/Power supply/Einspeisung:
3x400V+PE, 50Hz
Zpracoval/Processed /Hat verarbeitet:
Koska
Datum/Date/Datum:
13.5.2016
List/Page/
Seite: 11
Listů/Pages/
Seiten: 22
10

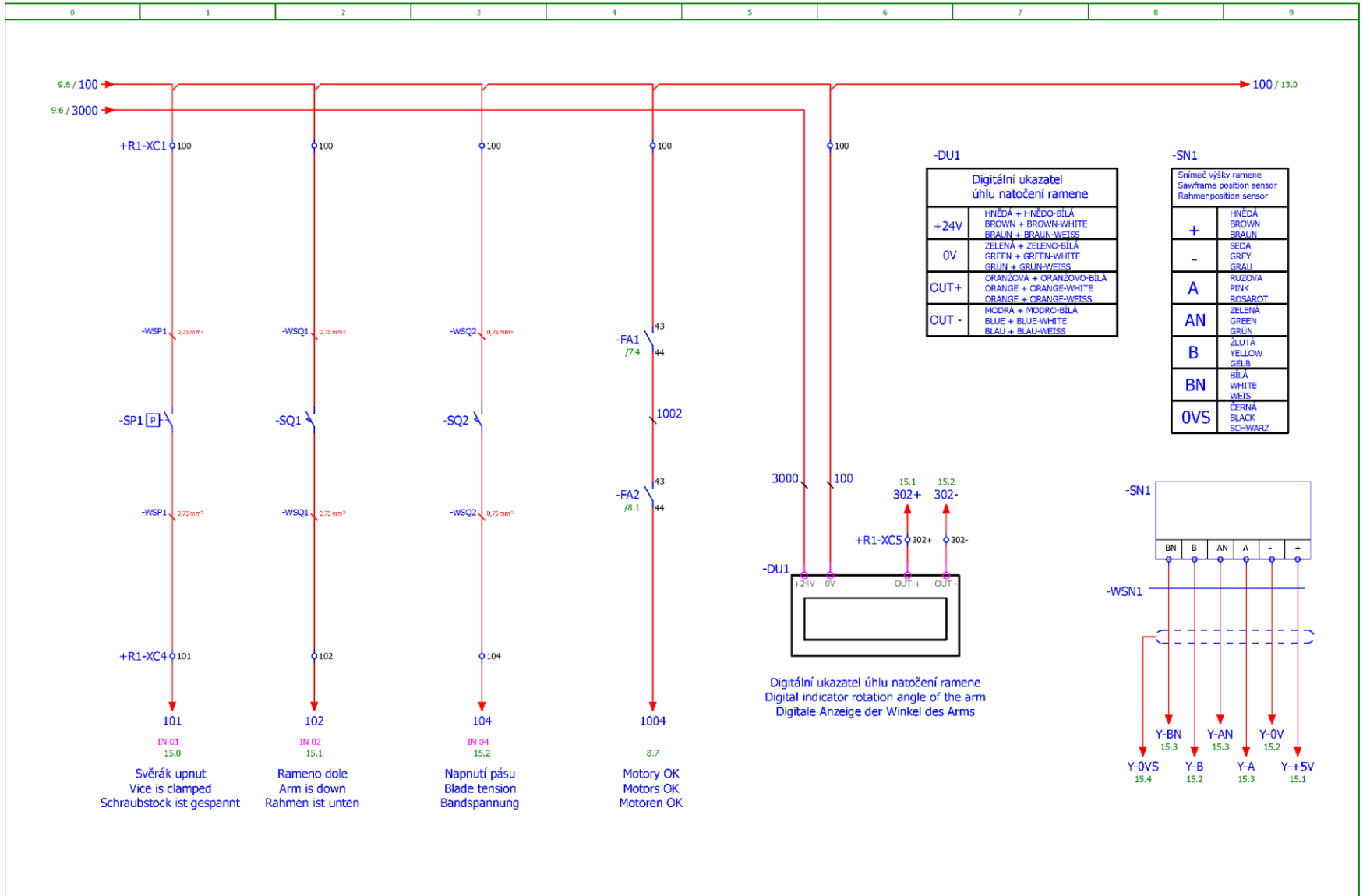


-DU1

| Digitální ukazatel úhlu natočení ramene | |
|---|---|
| +24V | HNĚDÁ + HNĚDO-BÍLÁ<br>BROWN + BROWN-WHITE<br>BRAUN + BRAUN-WEISS |
| 0V | ZELENÁ + ZELENO-BÍLÁ<br>GREEN + GREEN-WHITE<br>GRÜN + GRÜN-WEISS |
| OUT+ | ORANŽOVÁ + ORANŽOVO-BÍLÁ<br>ORANGE + ORANGE-WHITE<br>ORANGE + ORANGE-WEISS |
| OUT - | MODRÁ + MODRO-BÍLÁ<br>BLUE + BLUE-WHITE<br>BLAU + BLAU-WEISS |

-SN1

| Snímač výšky ramene<br>Sawframe position sensor<br>Rahmenposition sensor | |
|---|---|
| + | HNĚDÁ<br>BROWN<br>BRAUN |
| - | SEDÁ<br>GREY<br>GRAU |
| A | RUŽOVÁ<br>PINK<br>ROSAROT |
| AN | ZELENÁ<br>GREEN<br>GRÜN |
| B | ŽLUTÁ<br>YELLOW<br>GELB |
| BN | BÍLÁ<br>WHITE<br>WEIS |
| 0VS | ČERNÁ<br>BLACK<br>SCHWARZ |

11

| | | | | |
|---|---|---|---|---|
| BOMAR, s.r.o.<br>Těžební 1236/1<br>CZ 627 00, Brno | Stroj/Machine/Maschine:<br>Transverse 510.330 (D)GH | Název stránky/Name page/Name seiten:<br>Vstupy / Inputs / Eingänge | Číslo dok./Doc.No/Anzahl der Dokumente.: ES-06050-201/202-V6.7<br>Napájení/Power supply/Einspeinsung: 3x400V+PE, 50Hz<br>Zpracoval/Processed /Hat verarbeitet: Kostka<br>Datum/Date/Datum: 13.5.2016 | List/Page/Seite: 12<br>Listů/Pages/Seiten: 22 |

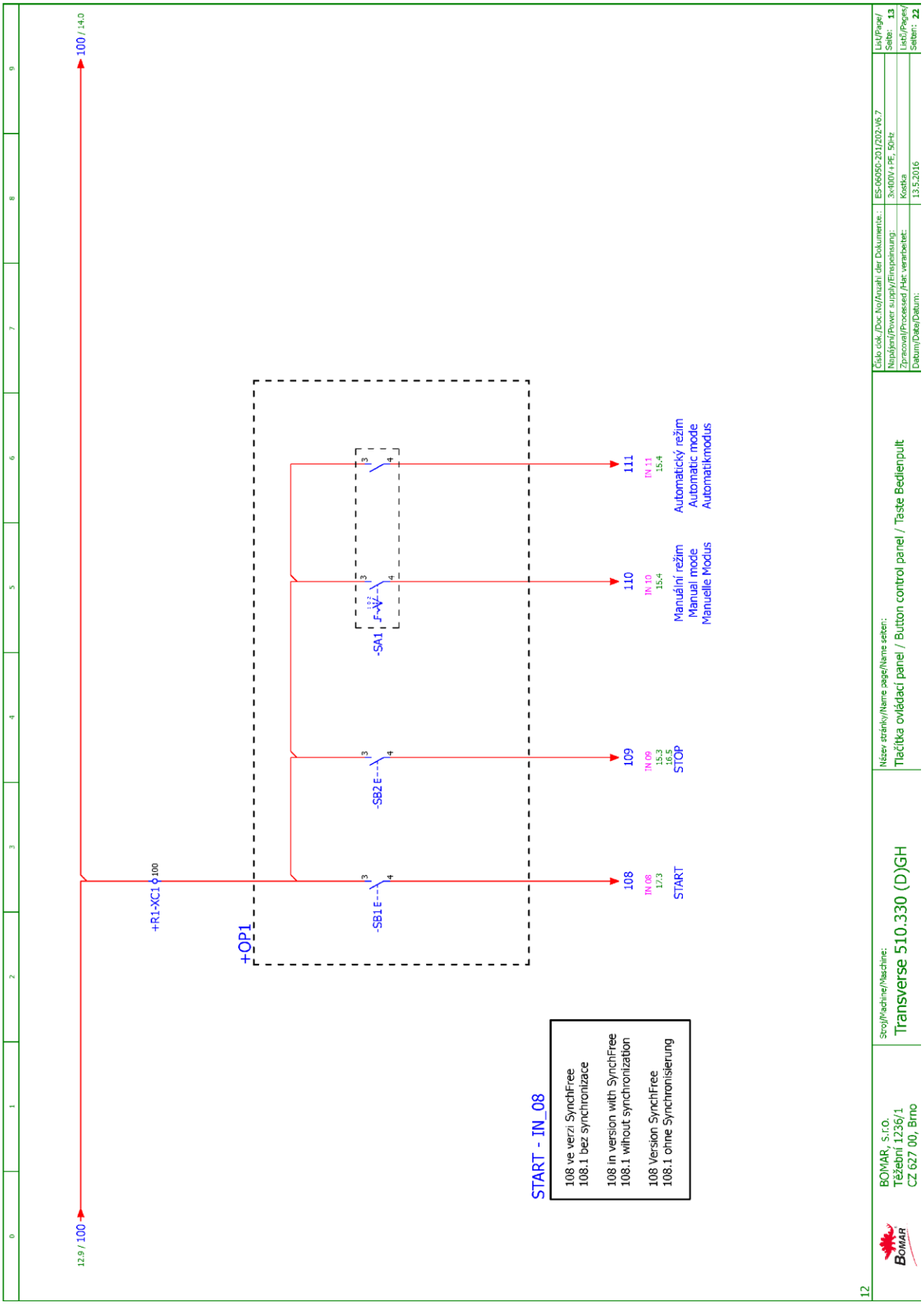
12.9 / 100
100 / 14.0
+R1-XC1 100
+OP1
-SB1 E
-SB2 E
-SA1
108
109
110
111
IN 08
17.3
START
IN 09
15.3
16.5
STOP
IN 10
15.4
Manuální režim
Manual mode
Manuelle Modus
IN 11
15.4
Automatický režim
Automatic mode
Automatikmodus
START - IN_08
108 ve verzi SynchFree
108.1 bez synchronizace
108 in version with SynchFree
108.1 without synchronization
108 Version SynchFree
108.1 ohne Synchronisierung
BOMAR, s.r.o.
Těžební 1236/1
CZ 627 00, Brno
Stroj/Machine/Maschine:
Transverse 510.330 (D)GH
Název stránky/Name page/Name seiten:
Tlačítka ovládací panel / Button control panel / Taste Bedienpult
Číslo dok./Doc.No/Anzahl der Dokumente:
ES-06050-201/202-V6.7
Napájení/Power supply/Einspeisung:
3x400V+PE, 50Hz
Zpracoval/Processed /Hat verarbeitet:
Kostka
Datum/Date/Datum:
13.5.2016
List/Page/
Seite: 13
List5/Pages/
Seiten: 22
12

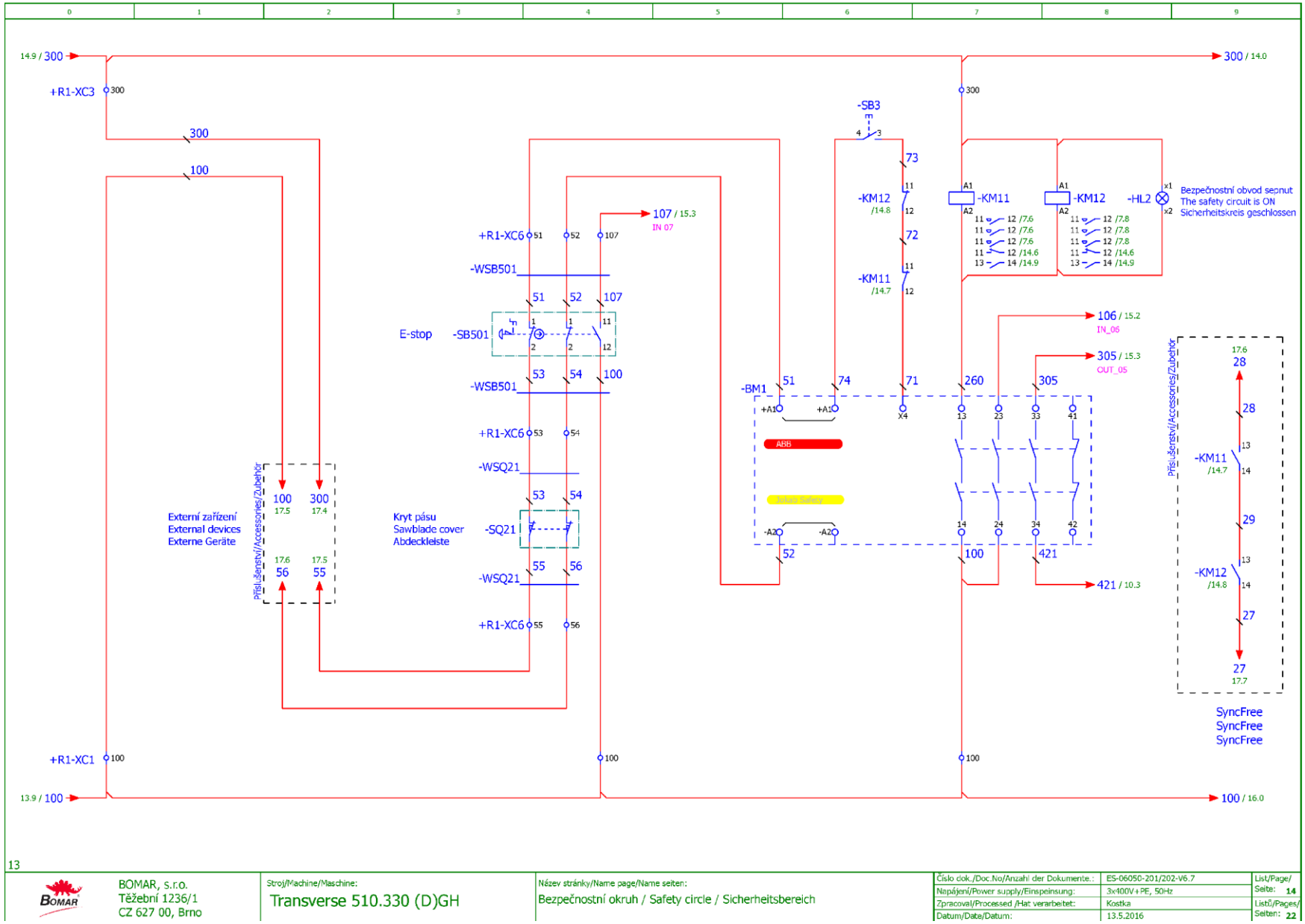


13

| | | | |
|---|---|---|---|
| BOMAR, s.r.o.<br>Těžební 1236/1<br>CZ 627 00, Brno | Stroj/Machine/Maschine:<br>Transverse 510.330 (D)GH | Název stránky/Name page/Name seiten:<br>Bezpečnostní okruh / Safety circle / Sicherheitsbereich | Číslo dok./Doc.No/Anzahl der Dokumente.: ES-06050-201/202-V6.7<br>Napájení/Power supply/Einspeisung: 3x400V+PE, 50Hz<br>Zpracoval/Processed /Hat verarbeitet: Kostka<br>Datum/Date/Datum: 13.5.2016 |
| | | | List/Page/Seite: 14<br>Listů/Pages/Seiten: 22 |

**Schéma**
**Schemas**
**Schematics**

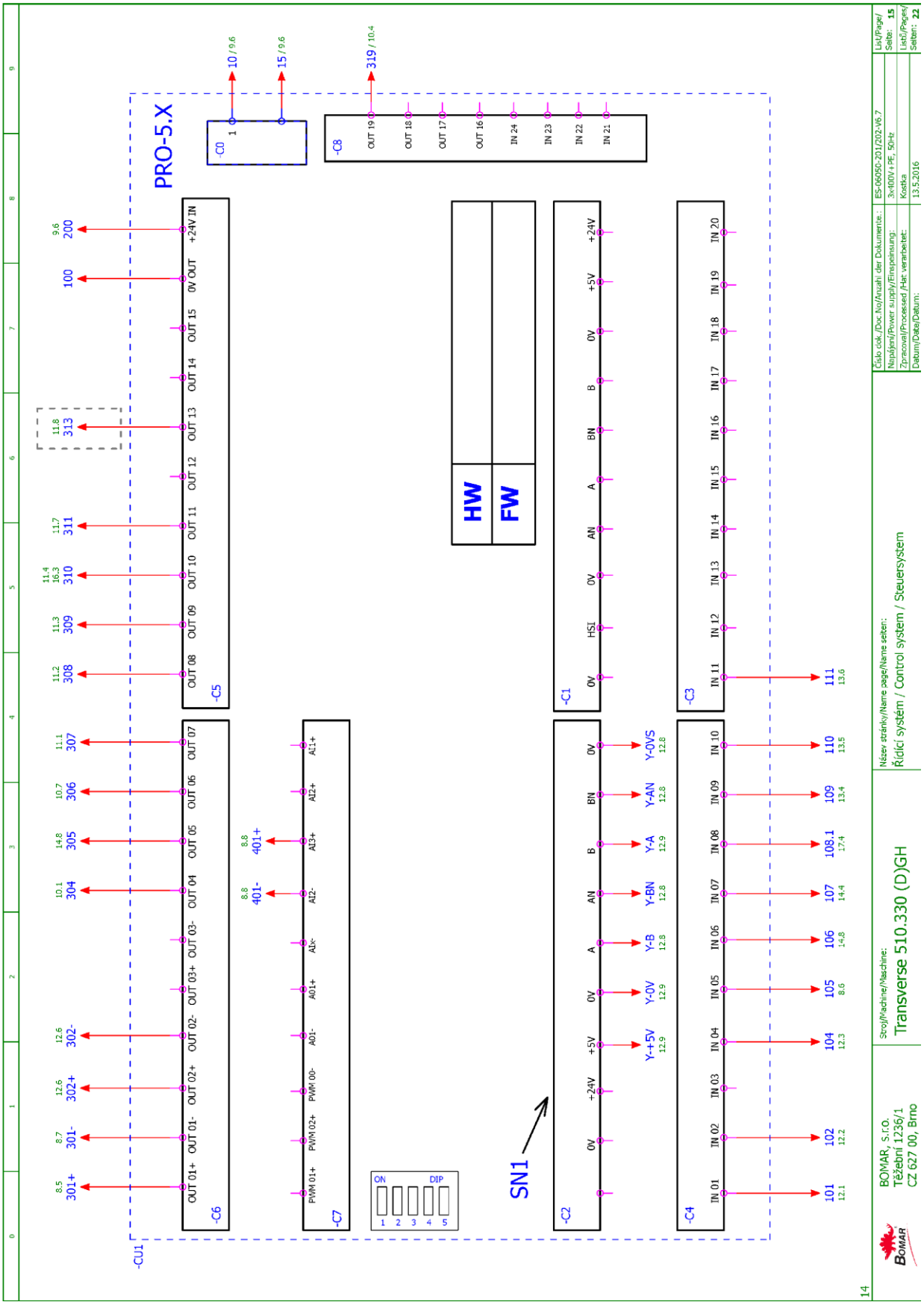
PRO-5.X
-CU1
-C0
-C8
-C5
-C6
-C7
-C1
-C2
-C3
-C4
HW
FW
SN1
ON
DIP
1 2 3 4 5
BOMAR, s.r.o.
Těžební 1236/1
CZ 627 00, Brno
Stroj/Machine/Maschine:
Transverse 510.330 (D)GH
Název stránky/Name page/Name seiten:
Řídící systém / Control system / Steuersystem
Číslo dok./Doc.No/Anzahl der Dokumente:
ES-06050-201/202-V6.7
Napájení/Power supply/Einspeisung:
3x400V+PE, 50Hz
Zpracoval/Processed /Hat verarbeitet:
Kostka
Datum/Date/Datum:
13.5.2016
List/Page/
Seite: 15
List/Pages/
Seiten: 22
14

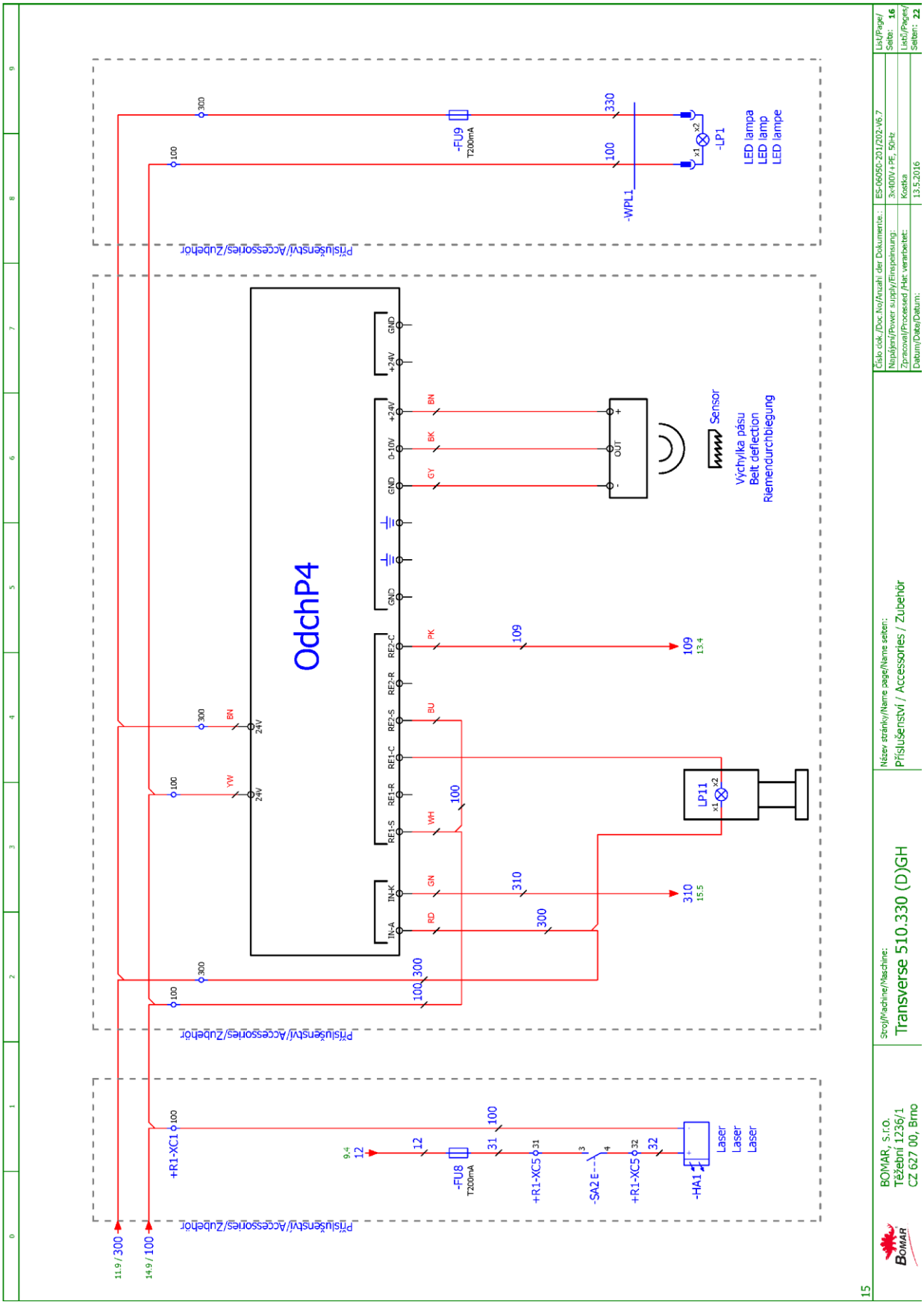


Schémata
Schemas
Schemas
Schematics

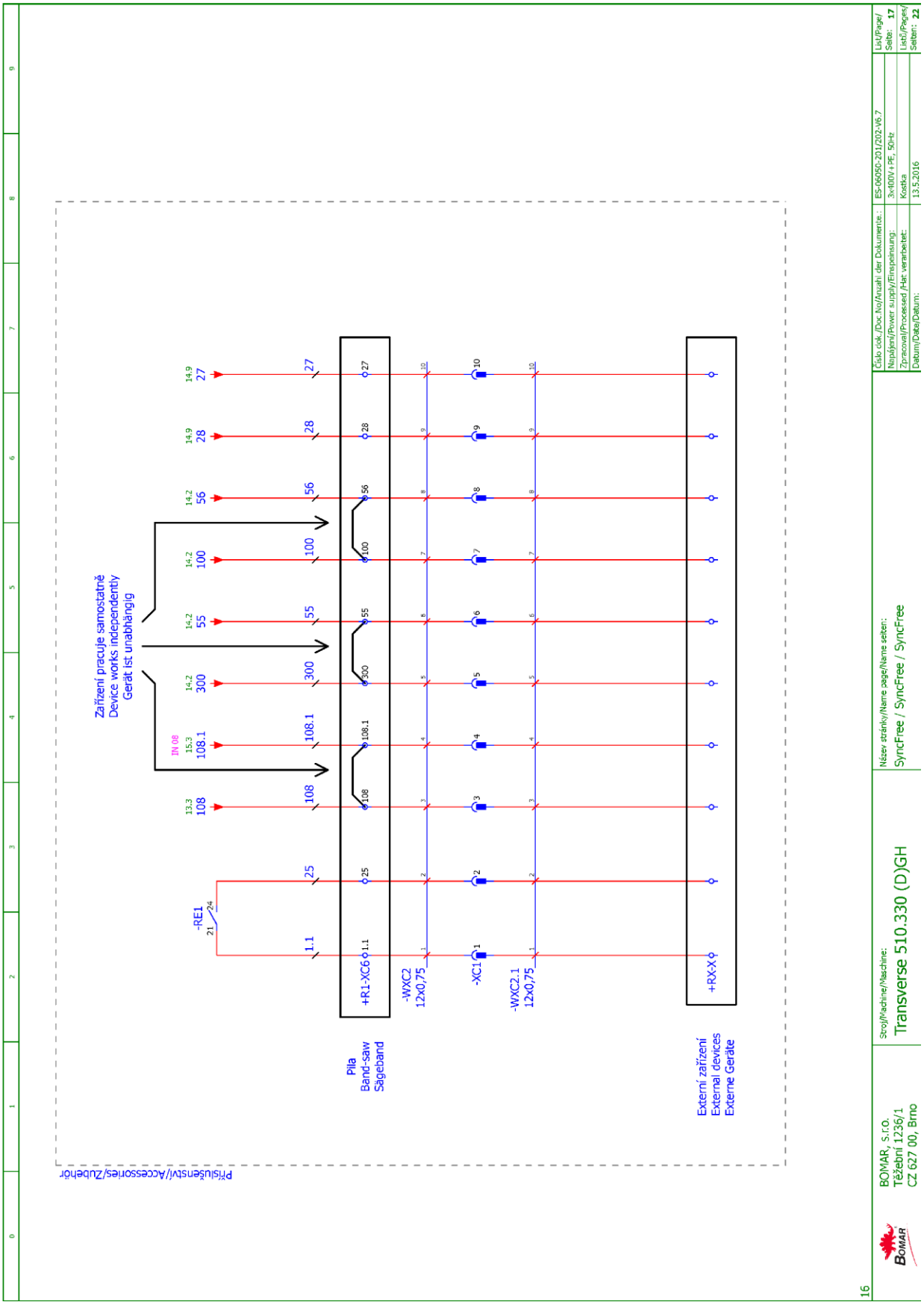
Zařízení pracuje samostatně
Device works independently
Gerät ist unabhängig
-RE1
+R1-XC6
-WXC2
12x0,75
-XC1
-WXC2.1
12x0,75
+RX-X
Pila
Band-saw
Sägeband
Externí zařízení
External devices
Externe Geräte
Příslušenství/Accessories/Zubehör
BOMAR, s.r.o.
Těžební 1236/1
CZ 627 00, Brno
Stroj/Machine/Maschine:
Transverse 510.330 (D)GH
Název stránky/Name page/Name seiten:
SyncFree / SyncFree / SyncFree
Číslo dok./Doc.No/Anzahl der Dokumente:
ES-06050-201/202-V6.7
Napájení/Power supply/Einspeisung:
3x400V+PE, 50Hz
Zpracoval/Processed /Hat verarbeitet:
Kostka
Datum/Date/Datum:
13.5.2016
List/Page/
Seite: 17
Listů/Pages/
Seiten: 22
16

## 6.2. 3x230 V +PE, 50 Hz

# Obsah / Table of contents / Inhalt


| Strana<br>Page<br>Seite | Název strany<br>Page name<br>Seitenname | Datum<br>Date<br>Datum |
|---|---|---|
| 1 | Úvodní strana / Start page / Startseite | 11.7.2017 |
| 2 | Obsah / Table of contents / Inhaltsverzeichnis | 11.7.2017 |
| 3 | Kusovník artiklů / Parts list / Artikelstückliste | 11.7.2017 |
| 3.a | Kusovník artiklů / Parts list / Artikelstückliste | 11.7.2017 |
| 3.b | Kusovník artiklů / Parts list / Artikelstückliste | 13.5.2016 |
| 3.c | Kusovník artiklů / Parts list / Artikelstückliste | 11.7.2017 |
| 3.d | Kusovník artiklů / Parts list / Artikelstückliste | 13.5.2016 |
| 3.e | Kusovník artiklů / Parts list / Artikelstückliste | 13.5.2016 |
| 4 | I/O řídící systém / I/O Control station / I/O Steuerung | 11.7.2017 |
| 5 | Rozmístění prvků v rozvaděči R1 / Placement of elements in enclosure R1 / Platzierung der Elemente im Schaltschrank R1 | 11.7.2017 |
| 6 | Ovládací panel OP1 / Control panel OP1 / Bedienpult OP1 | 13.5.2016 |
| 7 | Silová část M1 / Power part M1 / Feld partie M1 | 11.7.2017 |
| 8 | Silová část M2, M3 / Power part M2, M3 /Feld partie M2, M3 | 11.7.2017 |
| 9 | Deska zdroje / Power board / Netzgerat-Platte | 11.7.2017 |
| 10 | Stykače motorů M5 /Motor contactor M5 /Motor-Schutzschalter M5 | 11.7.2017 |
| 11 | Hydraulické ventily / Hydraulic valve / Hydroventil | 24.3.2016 |
| 12 | Vstupy / Inputs / Eingänge | 13.5.2016 |
| 13 | Tlačítka ovládací panel / Button control panel / Taste Bedienpult | 13.5.2016 |
| 14 | Bezpečnostní okruh / Safety circle / Sicherheitsbereich | 11.7.2017 |
| 15 | Řídící systém / Control system / Steuersystem | 13.5.2016 |
| 16 | Příslušenství / Accessories / Zubehör | 13.5.2016 |
| 17 | SyncFree / SyncFree / SyncFree | 13.5.2016 |

# Kusovník artiklů / Parts list / Stückliste

| Označení přístroje<br>Device identification<br>Geräteidentifikation | Typ přístroje<br>Device description<br>Gerätebeschreibung | Objednací číslo<br>Type number<br>Typennummer | Výrobce<br>Manufacturer<br>Hersteller | Skladové číslo<br>Part number<br>Lagernummer | Množství<br>Quantity<br>Menge | Umístění<br>Location<br>Stelle |
|---|---|---|---|---|---|---|
| -ZD1 | Napájecí zdroj - 15VAC/24VDC; 20VAC/28VDC<br>Power supply unit - 15VAC/24VDC; 20VAC/28VDC<br>Netzteil - 15VAC/24VDC; 20VAC/28VDC | ZDR-03 | Bomar | 265.915 | 1 | /9.2 |
| -BM1 | Bezpečnostní relé 24VDC, 3NO<br>Safety relay 24VDC, 3NO<br>Sicherheitsrelais 24VDC, 3NO | BT50 | ABB | 91.051.063 | 1 | /14.5 |
| -CU1 | Klávesnice - fóliová<br>Touch-sensitive keyboard<br>Folientastatur | 31.R230-207 | AKI ELECTRONIC,spol.s.r.o. | 31.R230-207 | 1 | /15.0 |
| -SN1 | Snímač výšky ramene<br>Arm height sensor<br>Arm Höhensensor | DHB | ASTP | 251.232 | 1 | /12.8 |
| -FA2 | Motorový spouštěč - 1.6A<br>Motor starter - 1.6A<br>Motorstarter - 1.6A | MS116-1,6 | ABB | 91.045.020 | 1 | /8.1 |
| -FU1 | Pojistka trubičková - 2A/250V, pomalá, 5x20<br>Tube fuse - 2A/250V, slow, 5x20<br>Rohrsicherung - 2A / 250V, langsam, 5x20 | T2A/250V | ESKA | 91.230.001 | 1 | /9.0 |
| -FU2 | Pojistka trubičková - 2A/250V, pomalá, 5x20<br>Tube fuse - 2A/250V, slow, 5x20<br>Rohrsicherung - 2A / 250V, langsam, 5x20 | T2A/250V | ESKA | 91.230.001 | 1 | /9.1 |
| -FU3 | Pojistka trubičková - 500mA/250V, pomalá, 5x20<br>Tube fuse - 500mA/250V, slow, 5x20<br>Rohrsicherung - 500 mA / 250 V, langsam, 5x20 | T500mA/250V | ESKA | 91.230.011 | 1 | /9.4 |
| -FU7 | Pojistka trubičková - 6,3A/250V, pomalá, 5x20<br>Tube fuse - 6,3A/250V, slow, 5x20<br>Rohrsicherung - T6,3A / 250V, langsam, 5x20 | T6,3A/250V | ESKA | 91.230.002 | 1 | /9.4 |
| -RP1 | Potenciometr 4k7<br>Potenciometer 4k7<br>Potentiometer 4k7 | TP195 4k7/N20A | Elektronické součástky CZ, a.s | 91.283.015 | 1 | /8.7 |
| -RP1 | Hlavice potenciometru - 24mm<br>Head of potentiometer 24mm<br>Leiter Potentiometer 24mm | S8877 BLK | GES-ELECTRONICS, a.s. | 91.060.063 | 1 | /8.7 |
| -RCF1 | Filtr RFC vývodový<br>Efferent RFC filter<br>Ableitenden RFC Filter | FBOPR1624 | Ing. Miroslav Vlček | 91.041.015 | 1 | /7.3 |

The manufacturer reserves right to use an equivalent replacement device.

2

| | | | | |
|---|---|---|---|---|
| BOMAR, s.r.o.<br>Těžební 1236/1<br>CZ 627 00, Brno | Stroj/Machine/Maschine:<br>Transverse 510.330 DGH | Název stránky/Name page/Name seiten:<br>Kusovník artiklů / Parts list / Artikelstückliste | Číslo dok./Doc.No/Anzahl der Dokumente.: ES-06050-203-V6.7<br>Napájení/Power supply/Einspeisung: 3x230V+PE, 50Hz<br>Zpracoval/Processed /Hat verarbeitet: Kostka<br>Datum/Date/Datum: 11.7.2017 | List/Page/Seite: 3<br>Listů/Pages/Seiten: 22 |

# Kusovník artiklů / Parts list / Stückliste

| Označení přístroje<br>Device identification<br>Geräteidentifikation | Typ přístroje<br>Device description<br>Gerätebeschreibung | Objednací číslo<br>Type number<br>Typennummer | Výrobce<br>Manufacturer<br>Hersteller | Skladové číslo<br>Part number<br>Lagernummer | Množství<br>Quantity<br>Menge | Umístění<br>Location<br>Stelle |
|---|---|---|---|---|---|---|
| -RCF2 | Filtr RFC vývodový<br>Efferent RFC filter<br>Ableitenden RFC Filter | FBOPR1624 | Ing. Miroslav Vlček | 91.041.015 | 1 | /8.0 |
| -RCF11 | Filtr RFC vývodový<br>Efferent RFC filter<br>Ableitenden RFC Filter | FBOPR1624 | Ing. Miroslav Vlček | 91.041.015 | 1 | /7.6 |
| -RCF12 | Filtr RFC vývodový<br>Efferent RFC filter<br>Ableitenden RFC Filter | FBOPR1624 | Ing. Miroslav Vlček | 91.041.015 | 1 | /7.7 |
| -FA1 | Motorový spouštěč - 0.4A<br>Motor starter - 0.4A<br>Motorstarter - 0.4A | MS116-0,4 | ABB | 91.045.017 | 1 | /7.4 |
| -FA1 | Pomocné kontakty - 1xNO+1xNC<br>Auxiliary contacts - 1xNO+1xNC<br>Hilfskontakte - 1xNO+1xNC | HKF1-11 | ABB | 91.046.002 | 1 | /7.4 |
| -FA2 | Pomocné kontakty - 1xNO+1xNC<br>Auxiliary contacts - 1xNO+1xNC<br>Hilfskontakte - 1xNO+1xNC | HKF1-11 | ABB | 91.046.002 | 1 | /8.1 |
| -FU1 | Svorka pojistková<br>Fuse terminal<br>Sicherungsklemme | WK4/THSi5U | WIELAND | 91.251.102 | 1 | /9.0 |
| -FU2 | Svorka pojistková<br>Fuse terminal<br>Sicherungsklemme | WK4/THSi5U | WIELAND | 91.251.102 | 1 | /9.1 |
| -FU3 | Svorka pojistková<br>Fuse terminal<br>Sicherungsklemme | WK4/THSi5U | WIELAND | 91.251.102 | 1 | /9.4 |
| -FU4 | Svorka pojistková<br>Fuse terminal<br>Sicherungsklemme | WK4/THSi5U | WIELAND | 91.251.102 | 1 | /9.4 |
| -FU4 | Pojistka trubičková - 800mA/250V, pomalá, 5x20<br>Tube fuse - 800A/250V, slow, 5x20<br>Rohrsicherung - 800A / 250V, langsam, 5x20 | T800mA/250V | ESKA | 91.230.010 | 1 | /9.4 |
| -FU5 | Svorka pojistková<br>Fuse terminal<br>Sicherungsklemme | WK4/THSi5U | WIELAND | 91.251.102 | 1 | /9.4 |

The manufacturer reserves right to use an equivalent replacement device.

3

BOMAR, s.r.o.
Těžební 1236/1
CZ 627 00, Brno

Stroj/Machine/Maschine: Transverse 510.330 DGH

Název stránky/Name page/Name seiten: Kusovník artiklů / Parts list / Artikelstückliste

| | |
|---|---|
| Číslo dok./Doc.No/Anzahl der Dokumente.: | ES-06050-203-V6.7 |
| Napájení/Power supply/Einspeinsung: | 3x230V+PE, 50Hz |
| Zpracoval/Processed /Hat verarbeitet: | Kostka |
| Datum/Date/Datum: | 11.7.2017 |

List/Page/Seite: 3.a
Listů/Pages/Seiten: 22

# Kusovník artiklů / Parts list / Stückliste

| Označení přístroje<br>Device identification<br>Geräteidentifikation | Typ přístroje<br>Device description<br>Gerätebeschreibung | Objednací číslo<br>Type number<br>Typennummer | Výrobce<br>Manufacturer<br>Hersteller | Skladové číslo<br>Part number<br>Lagernummer | Množství<br>Quantity<br>Menge | Umístění<br>Location<br>Stelle |
|---|---|---|---|---|---|---|
| -FU5 | Pojistka trubičková - 1A/250V, pomalá, 5x20<br>Tube fuse - 1A/250V, slow, 5x20<br>Rohrsicherung - 1A / 250V, langsam, 5x20 | T1A/250V | ESKA | 91.230.031 | 1 | /9.4 |
| -FU6 | Svorka pojistková<br>Fuse terminal<br>Sicherungsklemme | WK4/THSi5U | WIELAND | 91.251.102 | 1 | /9.4 |
| -FU6 | Pojistka trubičková - 200mA/250V, pomalá, 5x20<br>Tube fuse - 200mA/250V, slow, 5x20<br>Rohrsicherung - 160mA / 250V, langsam, 5x20 | T200mA/250V | ESKA | 91.230.037 | 1 | /9.4 |
| -FU7 | Svorka pojistková<br>Fuse terminal<br>Sicherungsklemme | WK4/THSi5U | WIELAND | 91.251.102 | 1 | /9.4 |
| -FU8 | Pojistka trubičková - 200mA/250V, pomalá, 5x20<br>Tube fuse - 200mA/250V, slow, 5x20<br>Rohrsicherung - 160mA / 250V, langsam, 5x20 | T200mA/250V | ESKA | 91.230.037 | 1 | /16.1 |
| -FU8 | Svorka pojistková<br>Fuse terminal<br>Sicherungsklemme | WK4/THSi5U | WIELAND | 91.251.102 | 1 | /16.1 |
| -FU9 | Pojistka trubičková - 200mA/250V, pomalá, 5x20<br>Tube fuse - 200mA/250V, slow, 5x20<br>Rohrsicherung - 160mA / 250V, langsam, 5x20 | T200mA/250V | ESKA | 91.230.037 | 1 | /16.9 |
| -FU9 | Svorka pojistková<br>Fuse terminal<br>Sicherungsklemme | WK4/THSi5U | WIELAND | 91.251.102 | 1 | /16.9 |
| -HL1 | Signálka zelená na adaptér<br>Green light for Eaton adapter<br>Grünes Licht für Eaton-Adapter | M22-LED-G | EATON | 91.061.023 | 1 | /10.4 |
| -KM1 | Ministýkač 4kW/400V<br>Minicontactor 4kW/400V<br>Minischutz 4kW/400V | B6S-30-01-1.7-71 | ABB | 91.040.049 | 1 | /10.1 |
| -KM2 | Ministýkač 4kW/400V<br>Minicontactor 4kW/400V<br>Minischutz 4kW/400V | B6S-30-01-1.7-71 | ABB | 91.040.049 | 1 | /10.3 |
| -KM11 | Stýkač 5,5kW/400V<br>Contactor 5,5kW/400V<br>Schütz 5,5kW/400V | AF12-30-01-11 | ABB | 91.040.051 | 1 | /14.7 |

The manufacturer reserves right to use an equivalent replacement device.

3.a

# Kusovník artiklů / Parts list / Stückliste

| Označení přístroje<br>Device identification<br>Geräteidentifikation | Typ přístroje<br>Device description<br>Gerätebeschreibung | Objednací číslo<br>Type number<br>Typennummer | Výrobce<br>Manufacturer<br>Hersteller | Skladové číslo<br>Part number<br>Lagernummer | Množství<br>Quantity<br>Menge | Umístění<br>Location<br>Stelle |
|---|---|---|---|---|---|---|
| -KM11 | Pomocný kontakt - 1xNC<br>Auxiliary contact - 1xNC<br>Hilfskontakt - 1 xNC | CA4-01 | ABB | 91.041.043 | 1 | /14.7 |
| -KM12 | Ministýkač 4kW/400V<br>Minicontactor 4kW/400V<br>Minischutz 4kW/400V | B6S-30-01-1.7-71 | ABB | 91.040.049 | 1 | /14.8 |
| -KM12 | Pomocné kontakty - 1xNO+1xNC<br>Auxiliary contacts - 1xNO+1xNC<br>Hilfskontakte - 1xNO+1xNC | CAF 6-11M | ABB | 91.041.042 | 1 | /14.8 |
| -PA1 | Pojistkový odpínač pro válcové vložky - 3P<br>Switch fuse for the cylinder inserts - 3P<br>Schalter Sicherung für den Zylindereinsätze - 3P | E 93/32 | ABB | 91.241.014 | 1 | /8.4 |
| -QS1.1 | 3 pólový odpínač, 40A<br>Disconnector - 3P, 40A<br>Trennschalter - 3P, 40A | OT40FT3 | ABB | 91.170.019 | 1 | /7.0 |
| -QS1.1 | Rukojeť odpínače - černá<br>Handle switch - black<br>Griffschalter - schwarz | OHBS2RJ | ABB | 91.180.015 | 1 | /7.0 |
| -QS1.1 | Kryt svorek<br>Terminal shroud<br>Klemmenabdeckung | OTS40T3 | ABB | 91.170.017 | 1 | /7.0 |
| -RP1 | Svorka rychloupínací<br>Fastconnect clamp<br>Fast Connect Klemm | WAGO 224-112 | WAGO | 91.250.009 | 3 | /8.7 |
| -SA1 | Hlavice 3 polohového přepínače<br>Head of 3 position switch<br>Leiter der 3-Positionsschalter | M22-WRK3 | EATON | 91.060.051 | 1 | /13.5 |
| -SA1 | Kontaktní blok - 1NO<br>Contact block - 1NO<br>Kontaktblock - 1NO | M22-K10 | EATON | 91.061.022 | 1 | /13.5 |
| -SA1 | Upevňovací adaptér + 1NO<br>Attaching adapter + 1NO<br>Montageadapter + 1NO | M22-AK10 | EATON | 91.061.021 | 1 | /13.5 |
| -SA1.2 | Hlavice tlačítka - černá<br>Head button - black<br>Kopftaste - schwarz | M22-D-S | EATON | 91.060.035 | 1 | /16.1 |

The manufacturer reserves right to use an equivalent replacement device.

3.b

# Kusovník artiklů / Parts list / Stückliste

| Označení přístroje<br>Device identification<br>Geräteidentifikation | Typ přístroje<br>Device description<br>Gerätebeschreibung | Objednací číslo<br>Type number<br>Typennummer | Výrobce<br>Manufacturer<br>Hersteller | Skladové číslo<br>Part number<br>Lagernummer | Množství<br>Quantity<br>Menge | Umístění<br>Location<br>Stelle |
|---|---|---|---|---|---|---|
| -SA1.2 | Upevňovací adaptér + 1NO<br>Attaching adapter + 1NO<br>Montageadapter + 1NO | M22-AK10 | EATON | 91.061.021 | 1 | /16.1 |
| -SB1 | Hlavice prosvětleného tlačítka zelená<br>Green transparent switch<br>Grün transparent Schalter | M22-DL-G | EATON | 91.060.031 | 1 | /13.3 |
| -SB1 | Upevňovací adaptér + 1NO<br>Attaching adapter + 1NO<br>Montageadapter + 1NO | M22-AK10 | EATON | 91.061.021 | 1 | /13.3 |
| -SB2 | Upevňovací adaptér + 1NO<br>Attaching adapter + 1NO<br>Montageadapter + 1NO | M22-AK10 | EATON | 91.061.021 | 1 | /13.4 |
| -SB2 | Hlavice tlačítka - černá<br>Head button - black<br>Kopftaste - schwarz | M22-D-S | EATON | 91.060.035 | 1 | /13.4 |
| -SB3 | Upevňovací adaptér + 1NO<br>Attaching adapter + 1NO<br>Montageadapter + 1NO | M22-AK10 | EATON | 91.061.021 | 1 | /14.6 |
| -SB3 | Hlavice prosvětleného tlačitka žlutá<br>Yellow trasparent switch<br>Leiter beleuchtet gelbe Taste | M22-DL-Y | EATON | 91.060.053 | 1 | /14.6 |
| -SB501 | Total stop - hlavice + 3xNC<br>Emergency-stop mushroom push - button + 3xNC<br>Not-Aus-Pilz - Taster + 3 xNC | YW1B-V4E02R | IDEC | 91.060.084 | 1 | /14.3 |
| -SB501 | Kontakt - 1x NO<br>Contact - 1x NO<br>Kontakt - 1x NO | YW-E10 | IDEC | 91.061.044 | 1 | /14.3 |
| -TR1 | Toroidal transformer - 0-230-400V/20V/15V, 150VA<br>Toroidal transformer - 0-230-400V/20V/15V, 150VA<br>Ringkerntransformator - 0-230V-400V/20V/15V, 150VA | 400V/230V/20V/15V 6A/2A 150VA | KARBAN s.r.o. | 91.080.026 | 1 | /9.1 |
| -SQ21 | Bezpečnostní koncový spínač - 2xNC<br>Safety Limit Switch - 2x NC<br>Sicherheitsendschalter - 2x NC | QKS8 | KEDU | 91.173.012 | 1 | /14.3 |
| -PA1 | Pojistka válcová - 25A, 10x38, rychlá<br>Tube fuse - 25A, 10x38, fast<br>Rohrsicherung - 25A, 10x38, schnell | PV10 25A gG | OEZ | 91.230.021 | 1 | /8.4 |

The manufacturer reserves right to use an equivalent replacement device.

3.c

# Kusovník artiklů / Parts list / Stückliste

| Označení přístroje<br>Device identification<br>Geräteidentifikation | Typ přístroje<br>Device description<br>Gerätebeschreibung | Objednací číslo<br>Type number<br>Typennummer | Výrobce<br>Manufacturer<br>Hersteller | Skladové číslo<br>Part number<br>Lagernummer | Množství<br>Quantity<br>Menge | Umístění<br>Location<br>Stelle |
|---|---|---|---|---|---|---|
| -SQ1 | Koncový spínač - 1NC+1NO<br>Limit switch - 1NC+1NO<br>Endschalter - 1NC+1NO | D4N-4A31 | OMRON | 91.173.007 | 1 | /12.2 |
| -SQ2 | Koncový spínač - 1NC+1NO<br>Limit switch - 1NC+1NO<br>Endschalter - 1NC+1NO | D4N-4A31 | OMRON | 91.173.007 | 1 | /12.3 |
| -FM1 | Frekvenční měnič - 3.7kW, 3x230VAC<br>Frequency converter - 3.7kW, 3x230VAC<br>Frequenzumrichter - 3.7 kW, 3x230VAC | VFD037E23A | DELTA ELECTRONICS, INC. | 91.012.090 | 1 | /8.4 |
| -CU1 | Řídící obvod<br>Control circuit<br>Die Steuerschaltung | PRO-5.X | Bomar | 91.995.221 | 1 | /15.0 |
| -RCF0 | RFC-filtr - 5.5 kW, 3x400V/230V, 25A<br>RFC-filter - 5.5 kW, 3x400V/230V, 25A<br>RFC-filter - 5.5 kW, 3x400V/230V, 25A | ATV31/5,5KW | Ing. Miroslav Vlček | 91.041.027 | 1 | /8.4 |
| -M4 | Ventilátor 24VDC, 154CFM<br>Fan 24VDC, 154CFM<br>Fan 24VDC, 154CFM | RDH1238 B2 | Xinruilian Electronic Co. | 91.015.126 | 1 | /10.6 |

The manufacturer reserves right to use an equivalent replacement device.

3.d

# Transverse 510.330 DGH

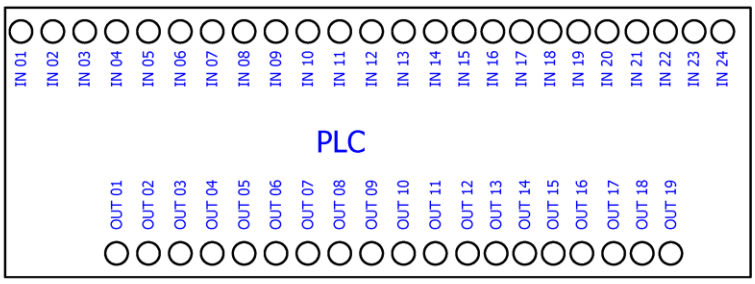


| | |
|---|---|
| HW | |
| FW | |
| | |
| | |
| | |
| | |
| | |
| | |
| | |
| | |
| | |

Pohled ze spodu/From under view/Blick nach

| I/O | CZE | ENG | DE |
|---|---|---|---|
| IN 01 | Svěrák upnut | Vice is clamped | Schraubstock ist gespannt |
| IN 02 | Rameno dole | Arm is down | Rahmen ist unten |
| IN 03 | NC | NC | NC |
| IN 04 | Napnutí pásu | Blade tension | Bandspannung |
| IN 05 | Motory OK | Motors OK | Motoren OK |
| IN 06 | Bezpečnostní okruh uzavřen | Safety circle shut down | Sicherheitsschaltung gesperrt |
| IN 07 | Tlačítko TOTAL STOP | Button TOTAL STOP | Taste TOTAL STOP |
| IN 08 | Tlačítko START | Button START | Taste START |
| IN 09 | Tlačítko STOP | Button STOP | Taste STOP |
| IN 10 | MANUAL | MANUAL | MANUAL |
| IN 11 | CYKLUS | CYCLE | ZYKLUS |
| IN 12 | NC | NC | NC |
| IN 13 | NC | NC | NC |
| IN 14 | NC | NC | NC |
| IN 15 | NC | NC | NC |
| IN 16 | NC | NC | NC |
| IN 17 | NC | NC | NC |
| IN 18 | NC | NC | NC |
| IN 19 | NC | NC | NC |
| IN 20 | NC | NC | NC |
| IN 21 | NC | NC | NC |
| IN 22 | NC | NC | NC |
| IN 23 | NC | NC | NC |
| IN 24 | NC | NC | NC |
| | | | |
| OUT 01+<br>OUT 01- | Start FM1 | Start FM1 | Start FM1 |
| OUT 02+<br>OUT 02- | Digitální ukazatel<br>úhlu natočení ramene | Digital indicator<br>rotation angle of the arm | Digitale Anzeige<br>der Winkel des Arms |
| OUT 03+<br>OUT 03- | NC | NC | NC |
| OUT 04 | Motor chlazení | Coolant pump | Motor Kühlung |
| OUT 05 | Čerpadlo hydrauliky | Hydraulic pump | Hydraulikpumpe |
| OUT 06 | NC | NC | NC |
| OUT 07 | Svěrák upnout | Vice clamp | Schraubstock spannen |
| OUT 08 | Svěrák povolit | Release vice | Schraubstock lösen |
| OUT 09 | Rameno nahoru | Arm up | Rahmen nach oben |
| OUT 10 | Rameno dolů | Arm down | Rahmen nach unten |
| OUT 11 | Rameno rychle | Arm fast | Rahmen schnell |
| OUT 12 | NC | NC | NC |
| OUT 13 | Mikronizer | Microniser | Mikronizer |
| OUT 14 | NC | NC | NC |
| OUT 15 | NC | NC | NC |
| OUT 16 | NC | NC | NC |
| OUT 17 | NC | NC | NC |
| OUT 18 | NC | NC | NC |
| OUT 19 | Kontrolka start | Indicator start | Kontrollicht start |

BOMAR, s.r.o.
Těžební 1236/1
CZ 627 00, Brno

Stroj/Machine/Maschine: Transverse 510.330 DGH

Název stránky/Name page/Name seiten: I/O řídící systém / I/O Control station / I/O Steuerung

Číslo dok./Doc.No/Anzahl der Dokumente.: ES-06050-2013-V6.7
Napájení/Power supply/Einspeisung: 3x230V+PE, 50Hz
Zpracoval/Processed /hat verarbeitet: Kostka
Datum/Date/Datum: 11.7.2017

List/Page/Seite: 4
Listů/Pages/Seiten: 22

3.e

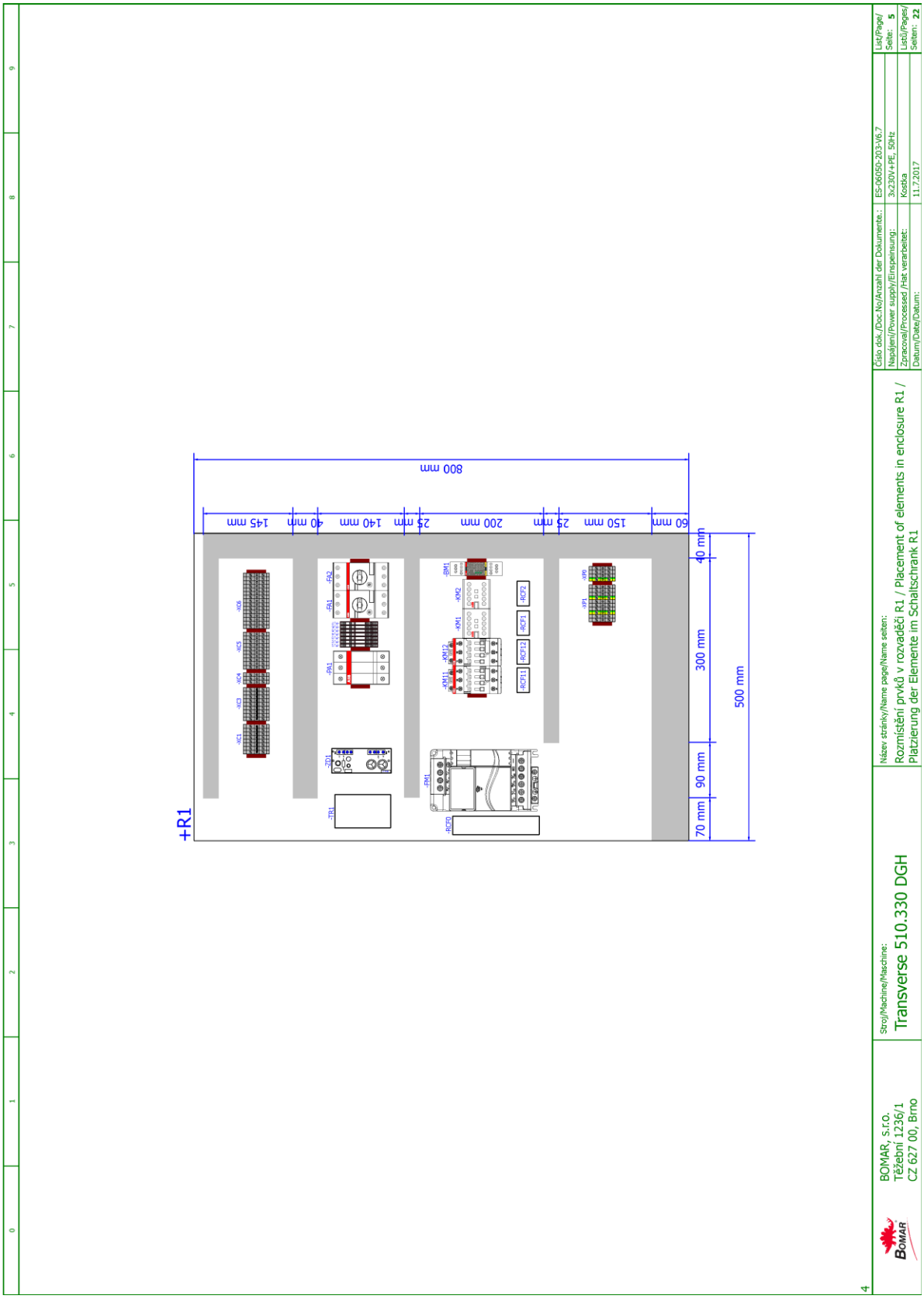
+R1
800 mm
145 mm
40 mm
140 mm
25 mm
200 mm
25 mm
150 mm
60 mm
40 mm
300 mm
500 mm
90 mm
70 mm
BOMAR, s.r.o.
Těžební 1236/1
CZ 627 00, Brno
Stroj/Machine/Maschine:
Transverse 510.330 DGH
Název stránky/Name page/Name seiten:
Rozmístění prvků v rozváděči R1 / Placement of elements in enclosure R1 /
Platzierung der Elemente im Schaltschrank R1
Číslo dok./Doc.No/Anzahl der Dokumente.:
ES-06050-203-V6.7
Napájení/Power supply/Einspeisung:
3x230V+PE, 50Hz
Zpracoval/Processed /Hat verarbeitet:
Kostka
Datum/Date/Datum:
11.7.2017
List/Page/
Seite: 5
Listů/Pages/
Seiten: 22

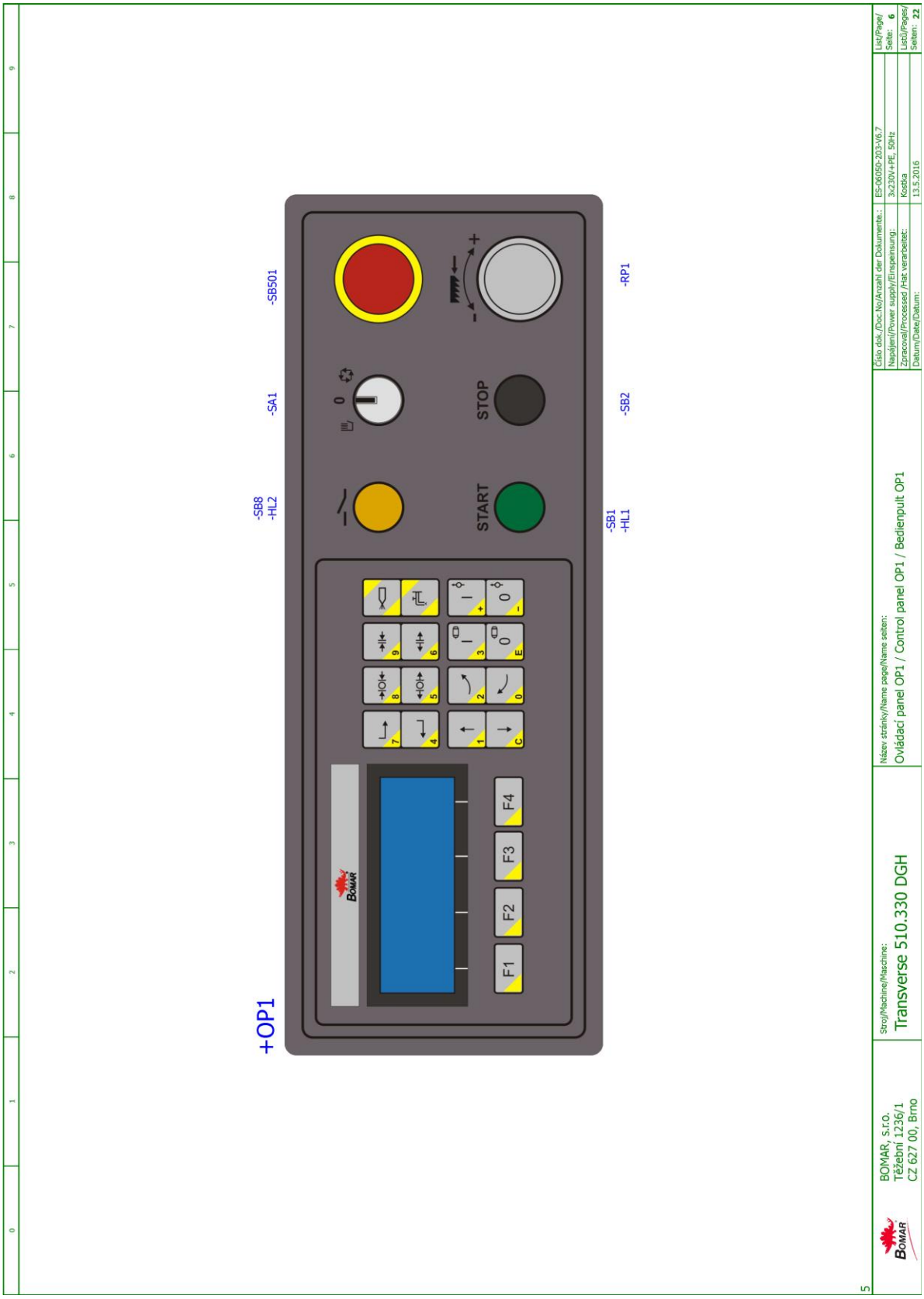
+OP1
-SB8
-HL2
-SA1
-SB501
-SB1
-HL1
-SB2
-RP1
START
STOP
BOMAR
F1
F2
F3
F4
BOMAR, s.r.o.
Těžební 1236/1
CZ 627 00, Brno
Stroj/Machine/Maschine:
Transverse 510.330 DGH
Název stránky/Name page/Name seiten:
Ovládací panel OP1 / Control panel OP1 / Bedienpult OP1
Číslo dok./Doc.No/Anzahl der Dokumente.:
ES-06050-203-V6.7
Napájení/Power supply/Einspeisung:
3x230V+PE, 50Hz
Zpracoval/Processed /Hat verarbeitet:
Kostka
Datum/Date/Datum:
13.5.2016
List/Page/
Seite: 6
Listů/Pages/
Seiten: 22

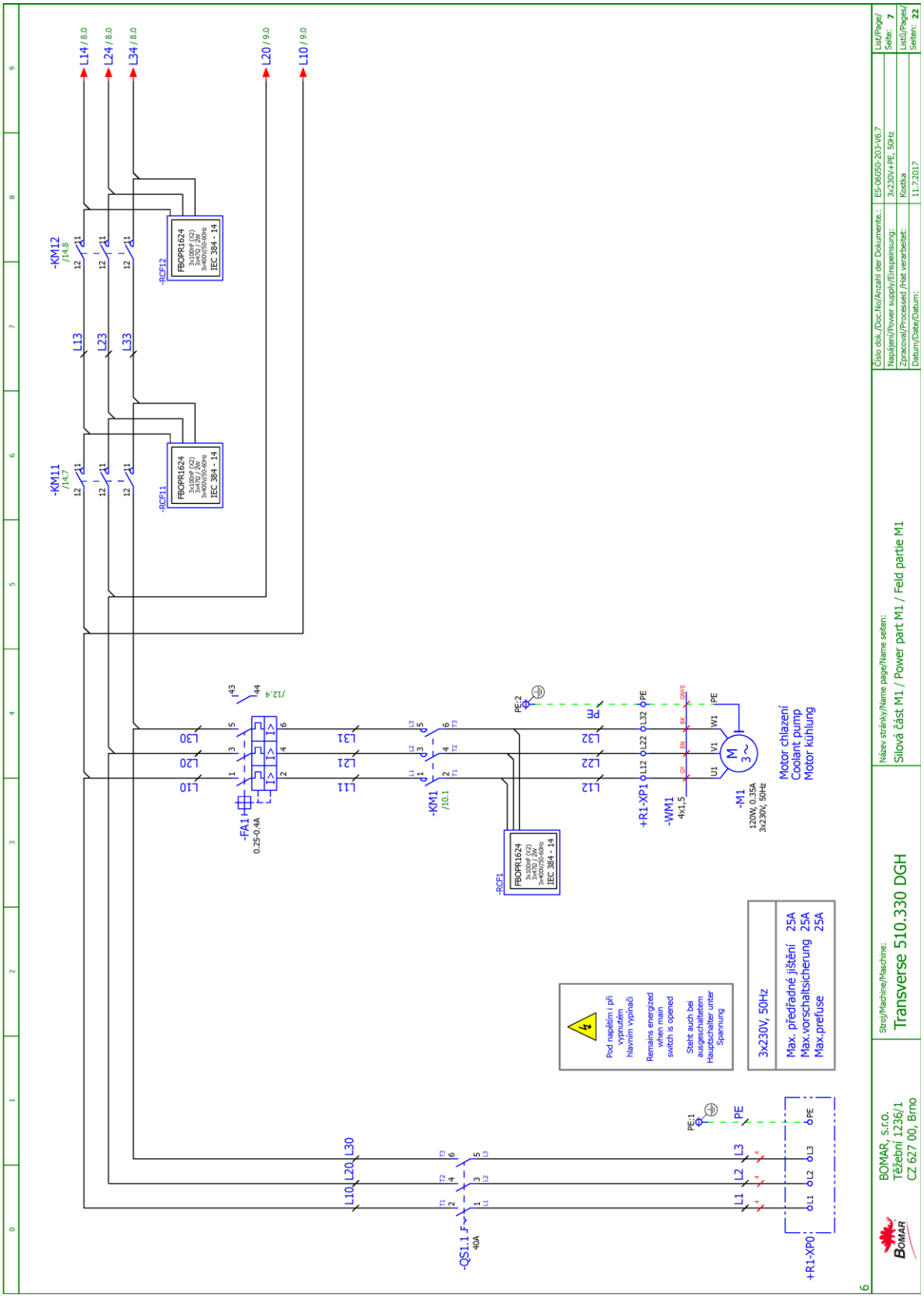
L14 / 8.0
L24 / 8.0
L34 / 8.0
L20 / 9.0
L10 / 9.0
-KM12
/14.8
-KM11
/14.7
L13
L23
L33
-RCF12
-RCF11
FBOPR1624
3x100mA (X2)
3x270V DC
3x400V/50-60Hz
IEC 384 - 14
/12.4
-FA1
0.25-0.4A
-KM1
/10.1
-RCF1
PE:2
+R1-XP1
-WM1
4x1,5
-M1
120W, 0.35A
3x230V, 50Hz
Motor chlazení
Coolant pump
Motor kühlung
Pod napětím i při vypnutém hlavním vypínači
Remains energized when main switch is opened
Steht auch bei ausgeschaltetem Hauptschalter unter Spannung
3x230V, 50Hz
Max. předřadné jištění 25A
Max.vorschaltsicherung 25A
Max.prefuse 25A
PE:1
-QS1.1 F
40A
+R1-XP0
BOMAR, s.r.o.
Těžební 1236/1
CZ 627 00, Brno
Stroj/Machine/Maschine:
Transverse 510.330 DGH
Název stránky/Name page/Name seiten:
Silová část M1 / Power part M1 / Feld partie M1
Číslo dok./Doc.No/Anzahl der Dokumente: ES-06050-203-V6.7
Napájení/Power supply/Einspeisung: 3x230V+PE, 50Hz
Zpracoval/Processed /Hat verarbeitet: Kostka
Datum/Date/Datum: 11.7.2017
List/Page/Seite: 7
Listů/Pages/Seiten: 22

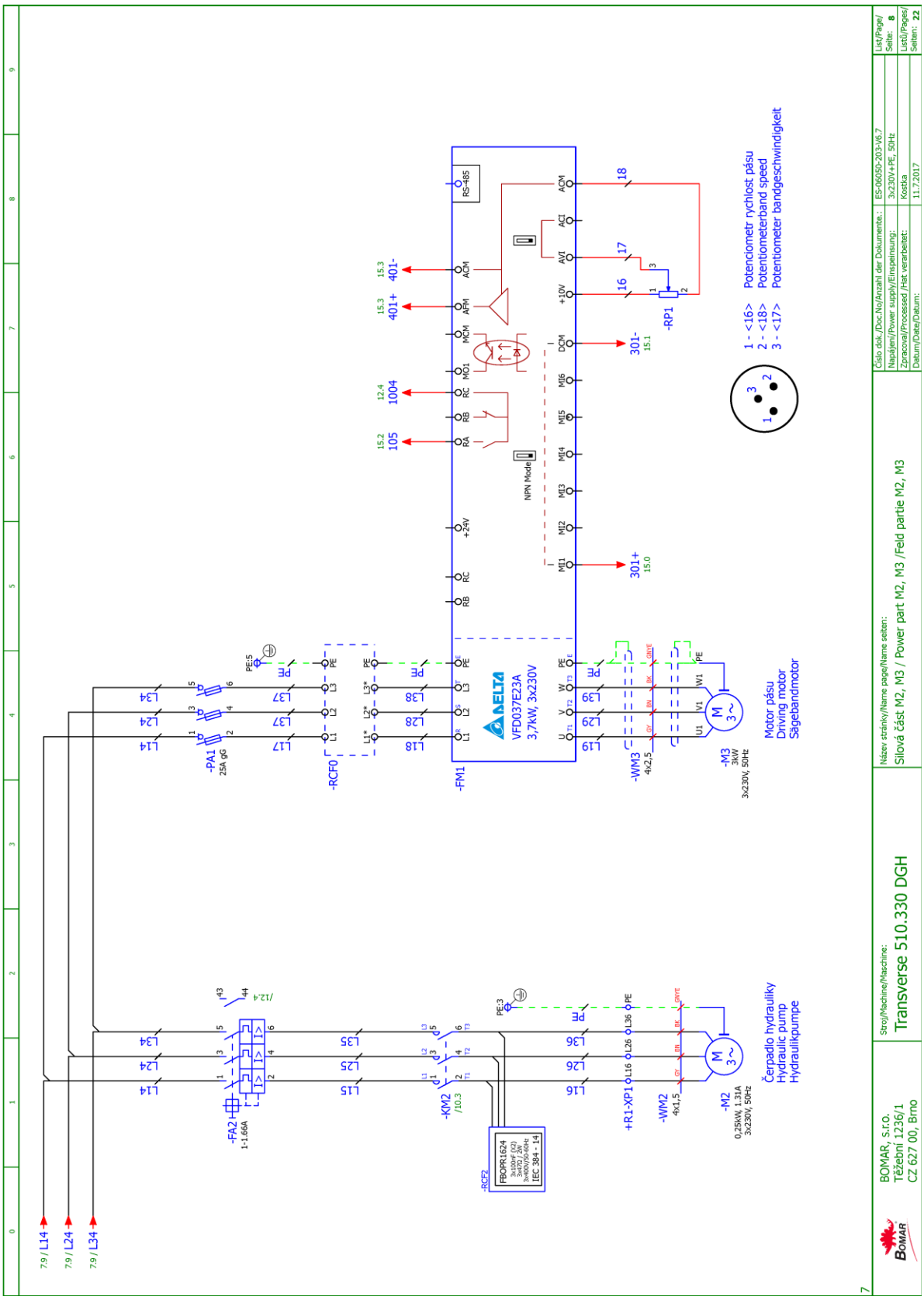
VFD037E23A
3,7kW, 3x230V
-FM1
-PA1
25A gG
-RCF0
-FA2
1-1.6kA
-KM2
-RCF2
FBQPR1624
IEC 384 - 14
-WM3
4x2,5
-M3
3kW
3x230V, 50Hz
Motor pásu
Driving motor
Sägebandmotor
-WM2
4x1,5
-M2
0,25kW, 1.31A
3x230V, 50Hz
Čerpadlo hydrauliky
Hydraulic pump
Hydraulikpumpe
+R1-XP1
-RP1
1 - <16> Potenciometr rychlost pásu
2 - <18> Potentiometerband speed
3 - <17> Potentiometer bandgeschwindigkeit
NPN Mode
RS-485
BOMAR, s.r.o.
Těžební 1236/1
CZ 627 00, Brno
Stroj/Machine/Maschine:
Transverse 510.330 DGH
Název stránky/Name page/Name seiten:
Silová část M2, M3 / Power part M2, M3 /Feld partie M2, M3
Číslo dok./Doc.No/Anzahl der Dokumente.:
ES-06050-203-V6.7
Napájení/Power supply/Einspeisung:
3x230V+PE, 50Hz
Zpracoval/Processed /Hat verarbeitet:
Kostka
Datum/Date/Datum:
11.7.2017
List/Page/Seite: 8
Listů/Pages/Seiten: 22

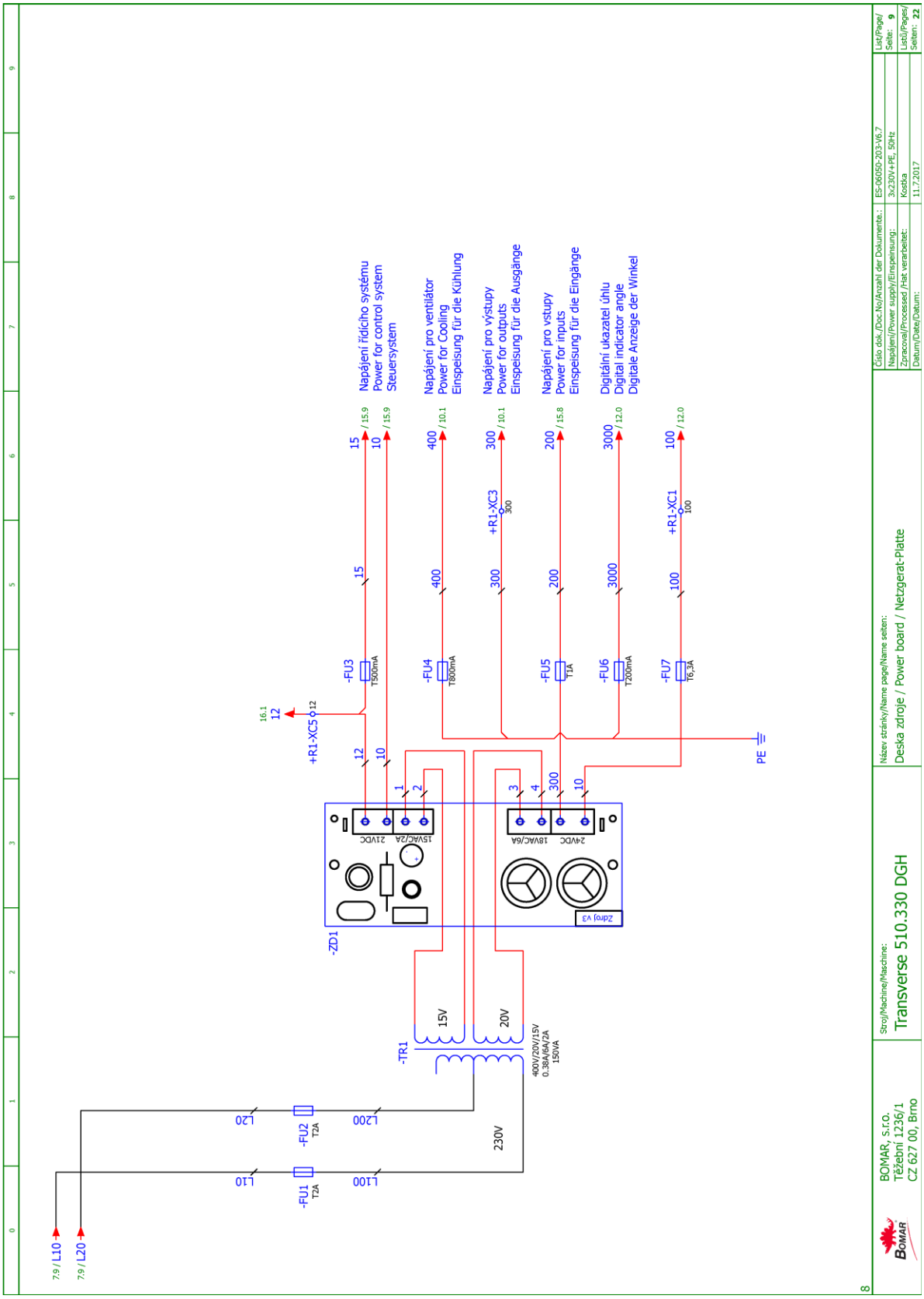
Napájení řídicího systému
Power for control system
Steuersystem
Napájení pro ventilátor
Power for Cooling
Einspeisung für die Kühlung
Napájení pro výstupy
Power for outputs
Einspeisung für die Ausgänge
Napájení pro vstupy
Power for inputs
Einspeisung für die Eingänge
Digitální ukazatel úhlu
Digital indicator angle
Digitale Anzeige der Winkel
-FU3 T500mA
-FU4 T800mA
-FU5 T1A
-FU6 T200mA
-FU7 T6,3A
+R1-XC5
+R1-XC3
+R1-XC1
-ZD1
Zdroj v3
21VDC
15VAC/2A
24VDC
18VAC/6A
-TR1
400V/230V/15V
0.38A/6A/2A
150VA
15V
20V
230V
-FU1 T2A
-FU2 T2A
L10
L20
L100
L200
PE
7.9 / L10
7.9 / L20
Stroj/Machine/Maschine:
Transverse 510.330 DGH
BOMAR, s.r.o.
Těžební 1236/1
CZ 627 00, Brno
Název stránky/Name page/Name seiten:
Deska zdroje / Power board / Netzgerat-Platte
Číslo dok./Doc.No/Anzahl der Dokumente.:
ES-06050-203-V6.7
Napájení/Power supply/Einspeisung:
3x230V+PE, 50Hz
Zpracoval/Processed /Hat verarbeitet:
Kostka
Datum/Date/Datum:
11.7.2017
List/Page/
Seite: 9
Listů/Pages/
Seiten: 22

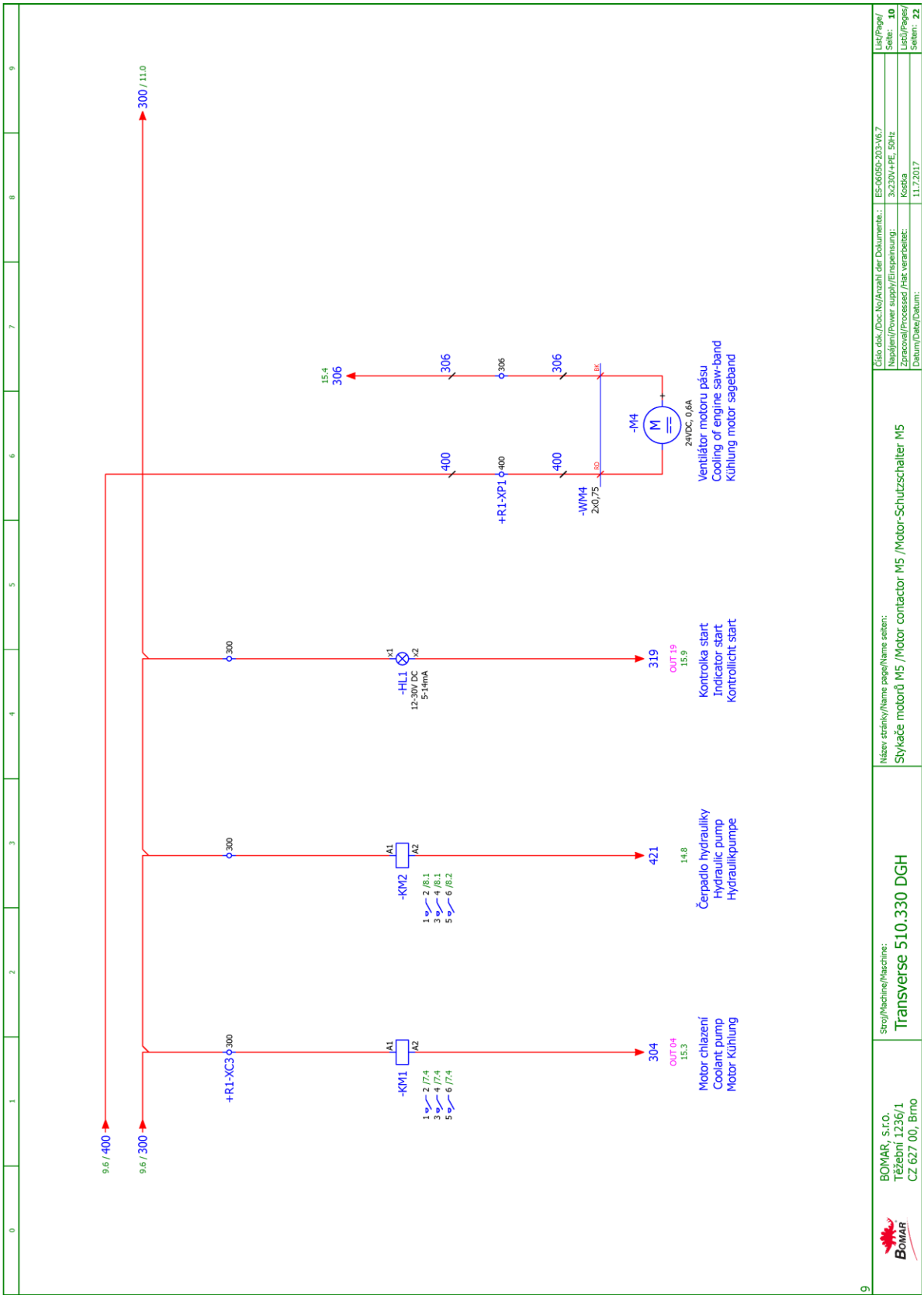
9.6 / 400
9.6 / 300
300 / 11.0
+R1-XC3
300
-KM1
A1
A2
1 2 /7.4
3 4 /7.4
5 6 /7.4
304
OUT 04
15.3
Motor chlazení
Coolant pump
Motor Kühlung
-KM2
1 2 /8.1
3 4 /8.1
5 6 /8.2
421
14.8
Čerpadlo hydrauliky
Hydraulic pump
Hydraulikpumpe
-HL1
12-30V DC
5-14mA
x1
x2
319
OUT 19
15.9
Kontrolka start
Indicator start
Kontrollicht start
+R1-XP1
400
306
15.4
-WM4
2x0,75
BK
RD
-M4
M
24VDC, 0,6A
Ventilátor motoru pásu
Cooling of engine saw-band
Kühlung motor sageband
Číslo dok./Doc.No/Anzahl der Dokumente.: ES-06050-203-V6.7
Napájení/Power supply/Einspeisung: 3x230V+PE, 50Hz
Zpracoval/Processed /Hat verarbeitet: Kostka
Datum/Date/Datum: 11.7.2017
List/Page/Seite: 10
List(i)/Pages/Seiten: 22
Název stránky/Name page/Name seiten:
Stykače motorů M5 /Motor contactor M5 /Motor-Schutzschalter M5
Stroj/Machine/Maschine:
Transverse 510.330 DGH
BOMAR, s.r.o.
Těžební 1236/1
CZ 627 00, Brno
BOMAR
9

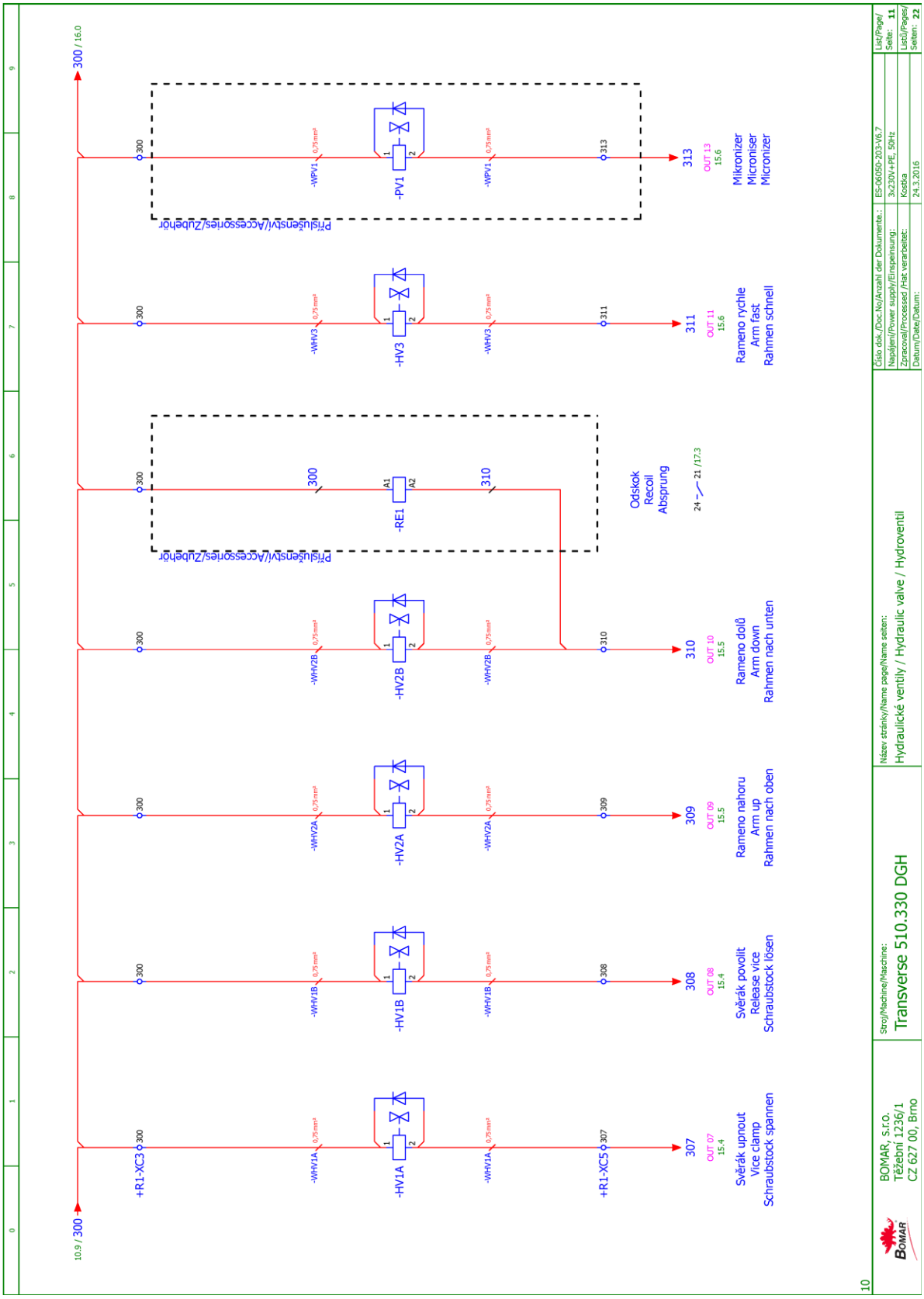
10.9 / 300
300 / 16.0
+R1-XC3
-WHV1A
-HV1A
+R1-XC5
307
OUT 07
15.4
Svěrák upnout
Vice clamp
Schraubstock spannen
-WHV1B
-HV1B
308
OUT 08
15.4
Svěrák povolit
Release vice
Schraubstock lösen
-WHV2A
-HV2A
309
OUT 09
15.5
Rameno nahoru
Arm up
Rahmen nach oben
-WHV2B
-HV2B
310
OUT 10
15.5
Rameno dolů
Arm down
Rahmen nach unten
Příslušenství/Accessories/Zubehör
-RE1
Odskok
Recoil
Absprung
24 → 21 /17.3
-WHV3
-HV3
311
OUT 11
15.6
Rameno rychle
Arm fast
Rahmen schnell
-WPV1
-PV1
313
OUT 13
15.6
Mikronizer
Microniser
Micronizer
BOMAR, s.r.o.
Těžební 1236/1
CZ 627 00, Brno
Stroj/Machine/Maschine:
Transverse 510.330 DGH
Název stránky/Name page/Name seiten:
Hydraulické ventily / Hydraulic valve / Hydroventil
Číslo dok./Doc.No/Anzahl der Dokumente.:
ES-06050-203-V6.7
List/Page/Seite: 11
Napájení/Power supply/Einspeisung:
3x230V+PE, 50Hz
Listů/Pages/Seiten: 22
Zpracoval/Processed /Hat verarbeitet:
Kostka
Datum/Date/Datum:
24.3.2016

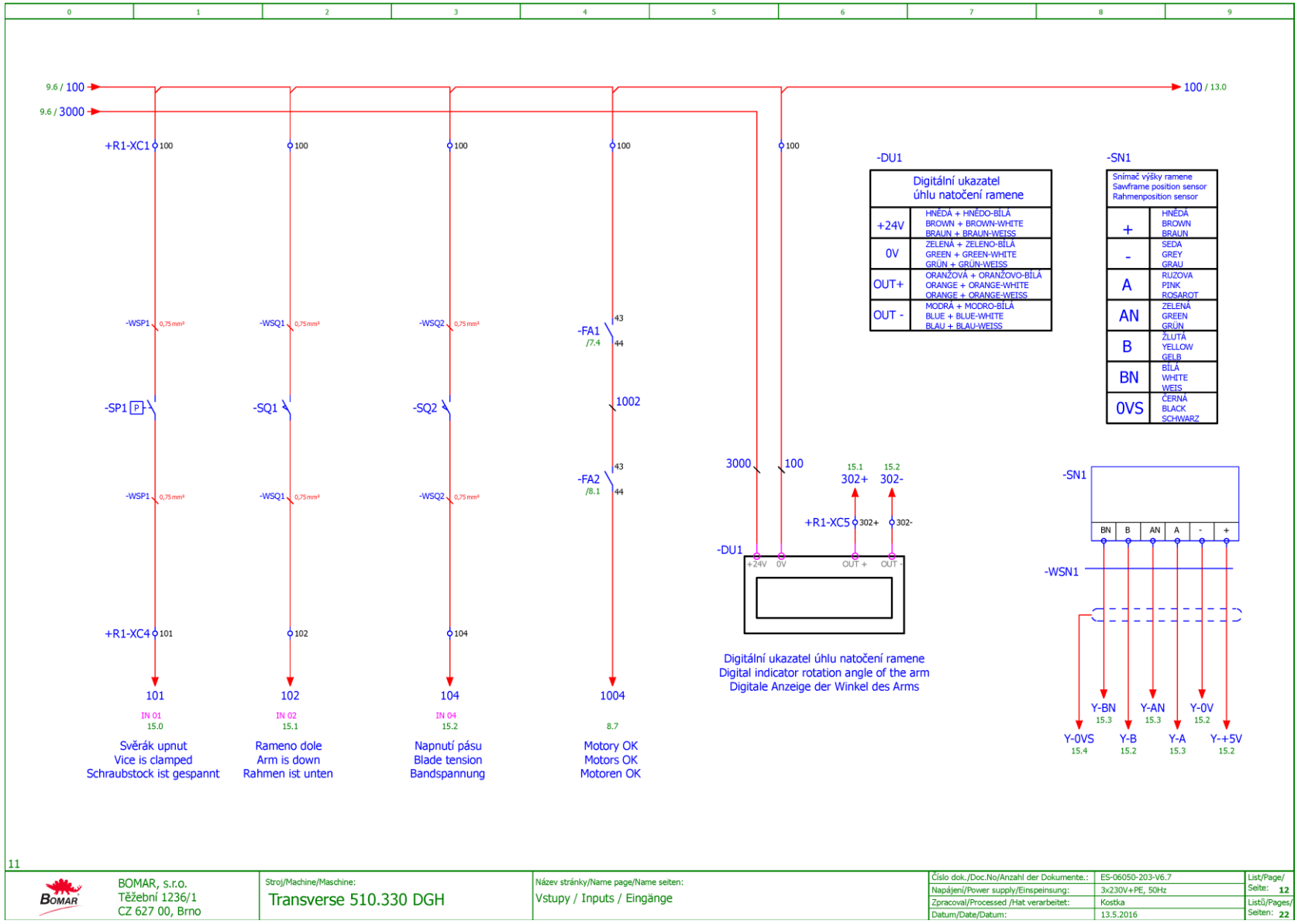
9.6 / 100
9.6 / 3000
100 / 13.0
+R1-XC1
-WSP1
-SP1
-WSQ1
-SQ1
-WSQ2
-SQ2
-FA1
/7.4
-FA2
/8.1
1002
+R1-XC4
101
102
104
1004
IN 01
15.0
IN 02
15.1
IN 04
15.2
8.7
Svěrák upnut
Vice is clamped
Schraubstock ist gespannt
Rameno dole
Arm is down
Rahmen ist unten
Napnutí pásu
Blade tension
Bandspannung
Motory OK
Motors OK
Motoren OK
-DU1
Digitální ukazatel úhlu natočení ramene
+24V
0V
OUT +
OUT -
302+
302-
+R1-XC5
Digitální ukazatel úhlu natočení ramene
Digital indicator rotation angle of the arm
Digitale Anzeige der Winkel des Arms
-SN1
Snímač výšky ramene
Sawframe position sensor
Rahmenposition sensor
BN
B
AN
A
-WSN1
Y-BN
Y-AN
Y-0V
Y-0VS
Y-B
Y-A
Y-+5V
BOMAR, s.r.o.
Těžební 1236/1
CZ 627 00, Brno
Stroj/Machine/Maschine:
Transverse 510.330 DGH
Název stránky/Name page/Name seiten:
Vstupy / Inputs / Eingänge
Číslo dok./Doc.No/Anzahl der Dokumente.: ES-06050-203-V6.7
Napájení/Power supply/Einspeisung: 3x230V+PE, 50Hz
Zpracoval/Processed /Hat verarbeitet: Kostka
Datum/Date/Datum: 13.5.2016
List/Page/Seite: 12
Listů/Pages/Seiten: 22

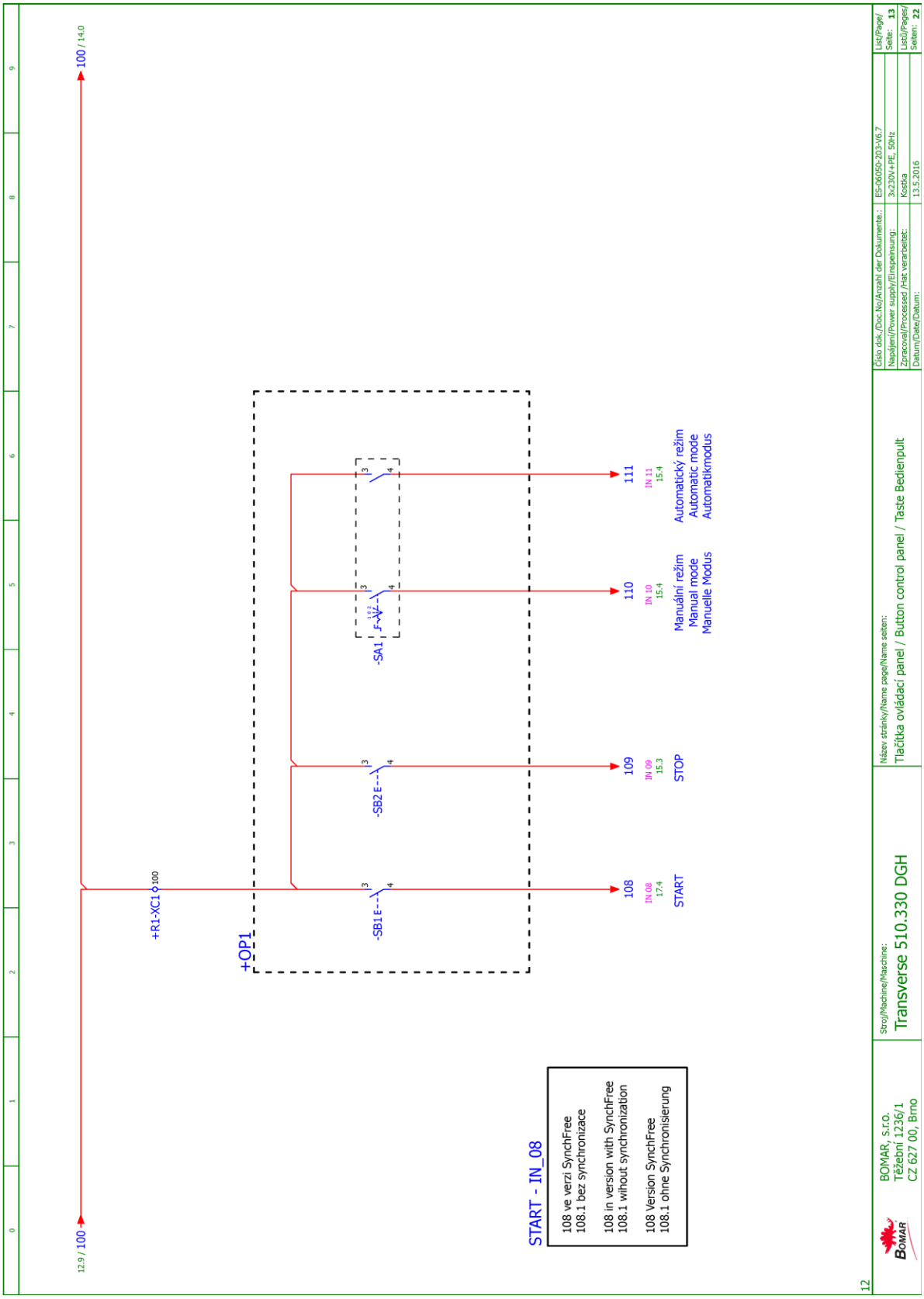
12.9 / 100
100 / 14.0
+R1-XC1 100
+OP1
-SB1 E
-SB2 E
-SA1
108
IN 08
17.4
START
109
IN 09
15.3
STOP
110
IN 10
15.4
Manuální režim
Manual mode
Manuelle Modus
111
IN 11
15.4
Automatický režim
Automatic mode
Automatikmodus
START - IN_08
108 ve verzi SynchFree
108.1 bez synchronizace
108 in version with SynchFree
108.1 without synchronization
108 Version SynchFree
108.1 ohne Synchronisierung
BOMAR, s.r.o.
Těžební 1236/1
CZ 627 00, Brno
Stroj/Machine/Maschine:
Transverse 510.330 DGH
Název stránky/Name page/Name seiten:
Tlačítka ovládací panel / Button control panel / Taste Bedienpult
Číslo dok./Doc.No/Anzahl der Dokumente.:
ES-06050-203-V6.7
Napájení/Power supply/Einspeisung:
3x230V+PE, 50Hz
Zpracoval/Processed /Hat verarbeitet:
Kostka
Datum/Date/Datum:
13.5.2016
List/Page/
Seite: 13
List(i)/Pages/
Seiten: 22
12

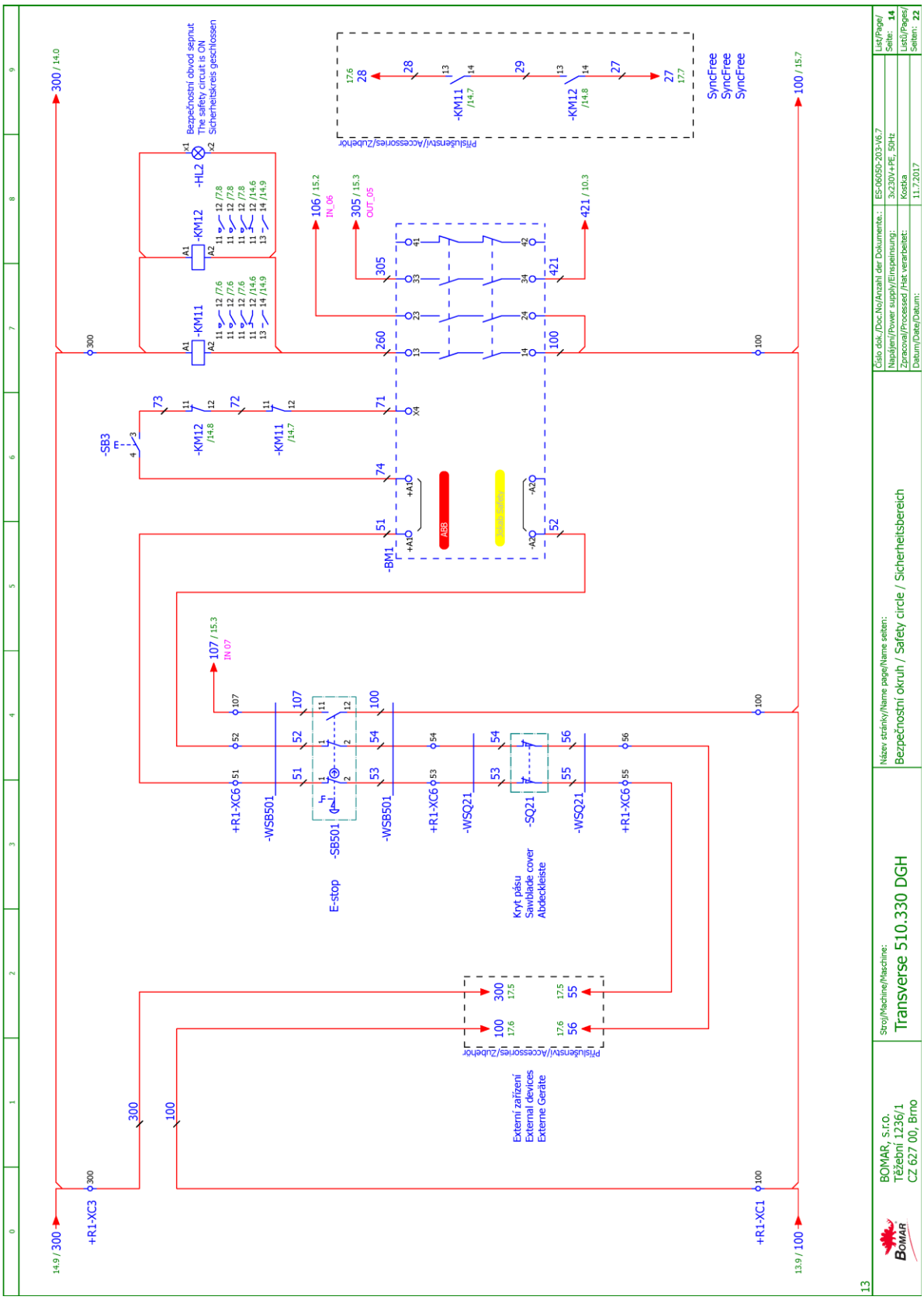
Bezpečnostní obvod sepnut
The safety circuit is ON
Sicherheitskreis geschlossen
-HL2
-KM12
-KM11
-SB3
-BM1
ABB
Přísluženství/Accessories/Zubehör
SyncFree
SyncFree
SyncFree
+R1-XC6
-WSB501
-SB501
E-stop
Kryt pásu
Sawblade cover
Abdeckleiste
-WSQ21
-SQ21
Externí zařízení
External devices
Externe Geräte
+R1-XC3
+R1-XC1
Číslo dok./Doc.No/Anzahl der Dokumente.: ES-06050-203-V6.7
Napájení/Power supply/Einspeisung: 3x230V+PE, 50Hz
Zpracoval/Processed /Hat verarbeitet: Kostka
Datum/Date/Datum: 11.7.2017
List/Page/Seite: 14
Listů/Pages/Seiten: 22
Název stránky/Name page/Name seiten:
Bezpečnostní okruh / Safety circle / Sicherheitsbereich
Stroj/Machine/Maschine:
Transverse 510.330 DGH
BOMAR, s.r.o.
Těžební 1236/1
CZ 627 00, Brno

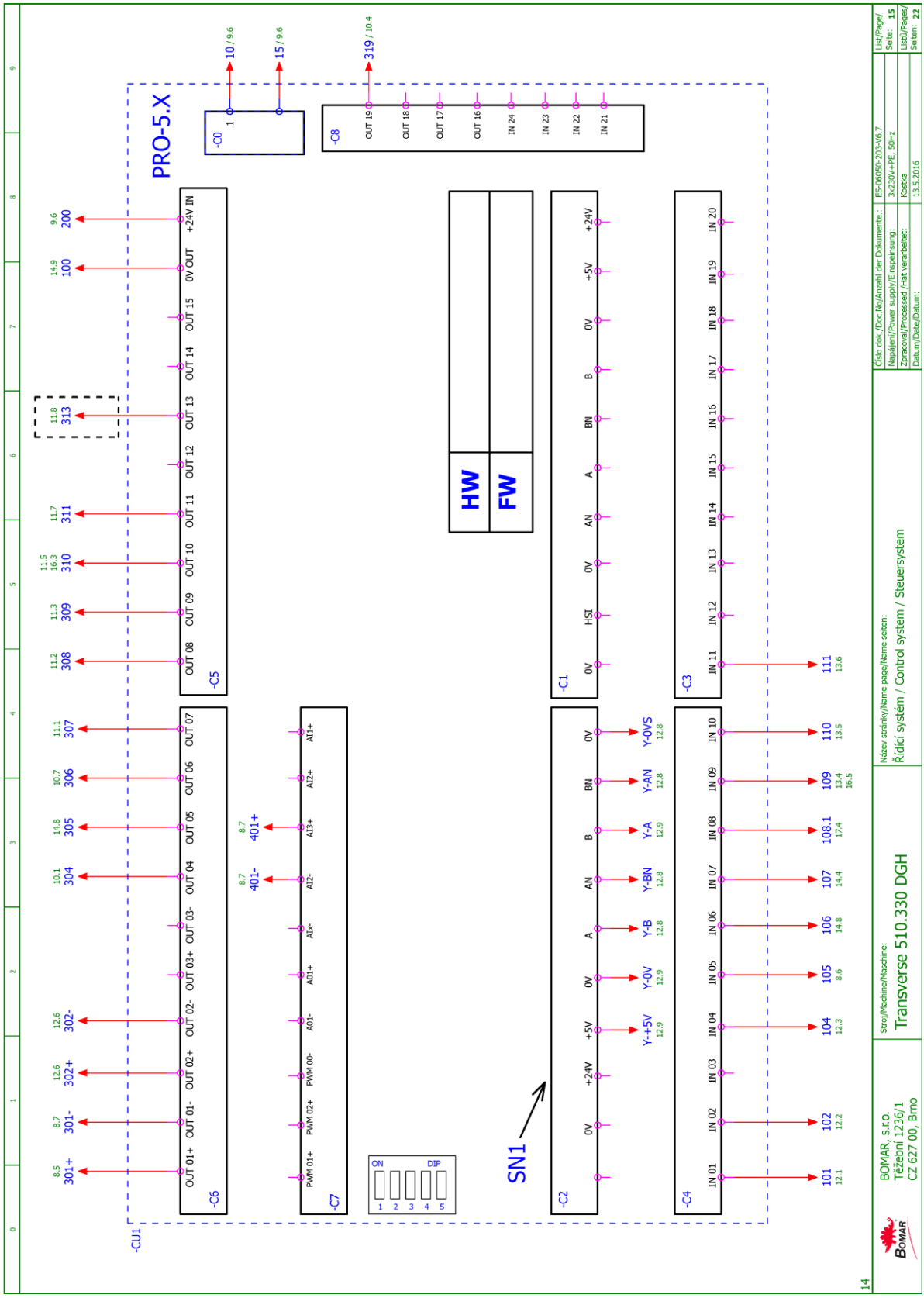
PRO-5.X
-CU1
-C0
-C8
-C5
-C6
-C7
-C1
-C2
-C3
-C4
HW
FW
SN1
ON
DIP
1 2 3 4 5
BOMAR, s.r.o.
Těžební 1236/1
CZ 627 00, Brno
Stroj/Machine/Maschine:
Transverse 510.330 DGH
Název stránky/Name page/Name seiten:
Řídící systém / Control system / Steuersystem
Číslo dok./Doc.No/Anzahl der Dokumente:
ES-06050-203-V6.7
Napájení/Power supply/Einspeisung:
3x230V+PE, 50Hz
Zpracoval/Processed /Hat verarbeitet:
Kostka
Datum/Date/Datum:
13.5.2016
List/Page/Seite: 15
Listů/Pages/Seiten: 22
14

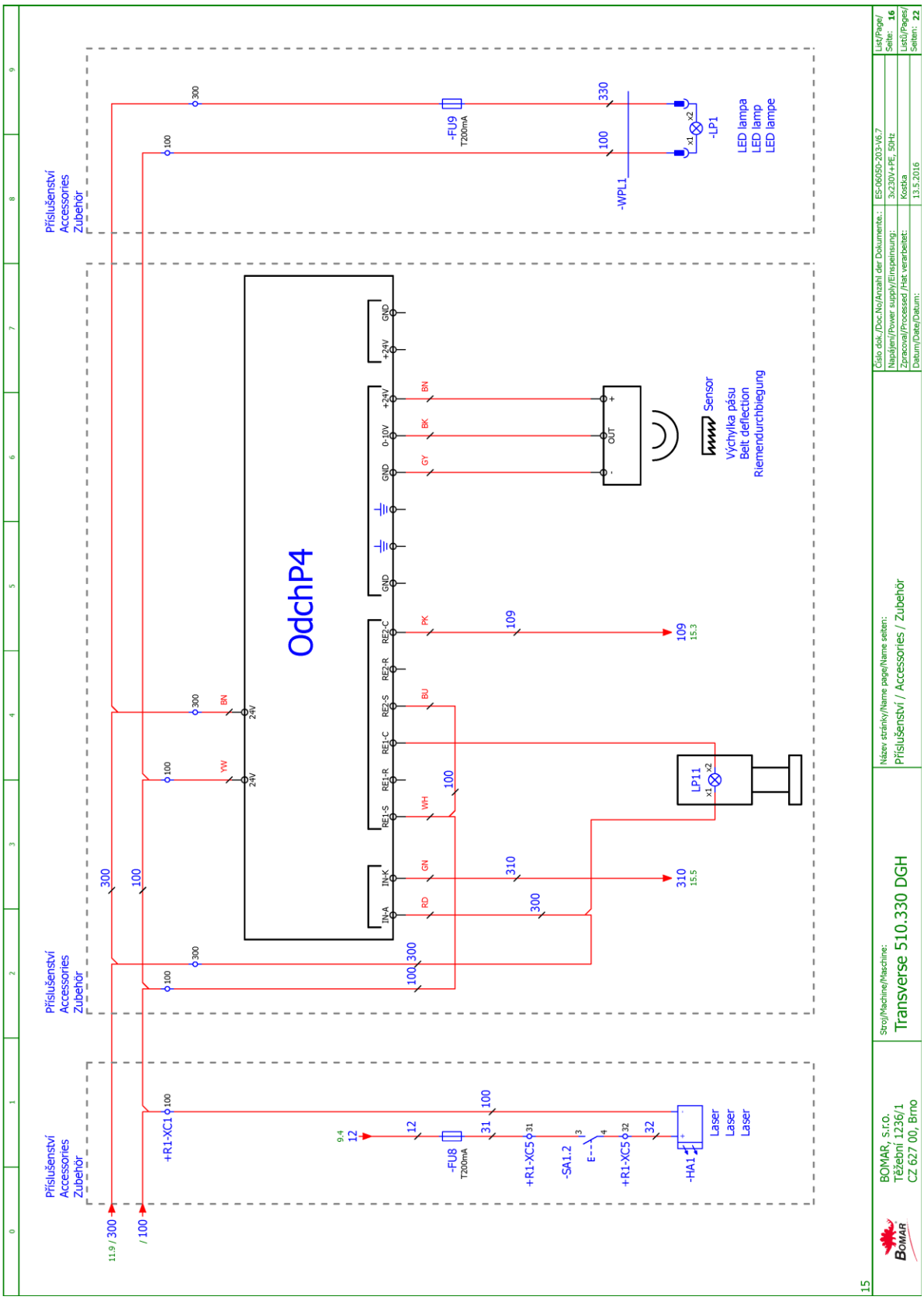
Příslušenství
Accessories
Zubehör
OdchP4
IN-A
IN-K
RE1-S
RE1-R
RE1-C
RE2-S
RE2-R
RE2-C
GND
+24V
0-10V
OUT
Sensor
Výchylka pásu
Belt deflection
Riemendurchbiegung
LED lampa
LED lamp
LED lampe
-FU9
T200mA
-WPL1
-LP1
LP11
+R1-XC1
-FU8
T200mA
+R1-XC5
-SA1.2
-HA1
Laser
Laser
Laser
11.9 / 300
/ 100
Číslo dok./Doc.No/Anzahl der Dokumente.: ES-06050-203-V6.7
Napájení/Power supply/Einspeisung: 3x230V+PE, 50Hz
Zpracoval/Processed /Hat verarbeitet: Kostka
Datum/Date/Datum: 13.5.2016
List/Page/Seite: 16
Listů/Pages/Seiten: 22
Název stránky/Name page/Name seiten:
Příslušenství / Accessories / Zubehör
Stroj/Machine/Maschine:
Transverse 510.330 DGH
BOMAR, s.r.o.
Těžební 1236/1
CZ 627 00, Brno
15

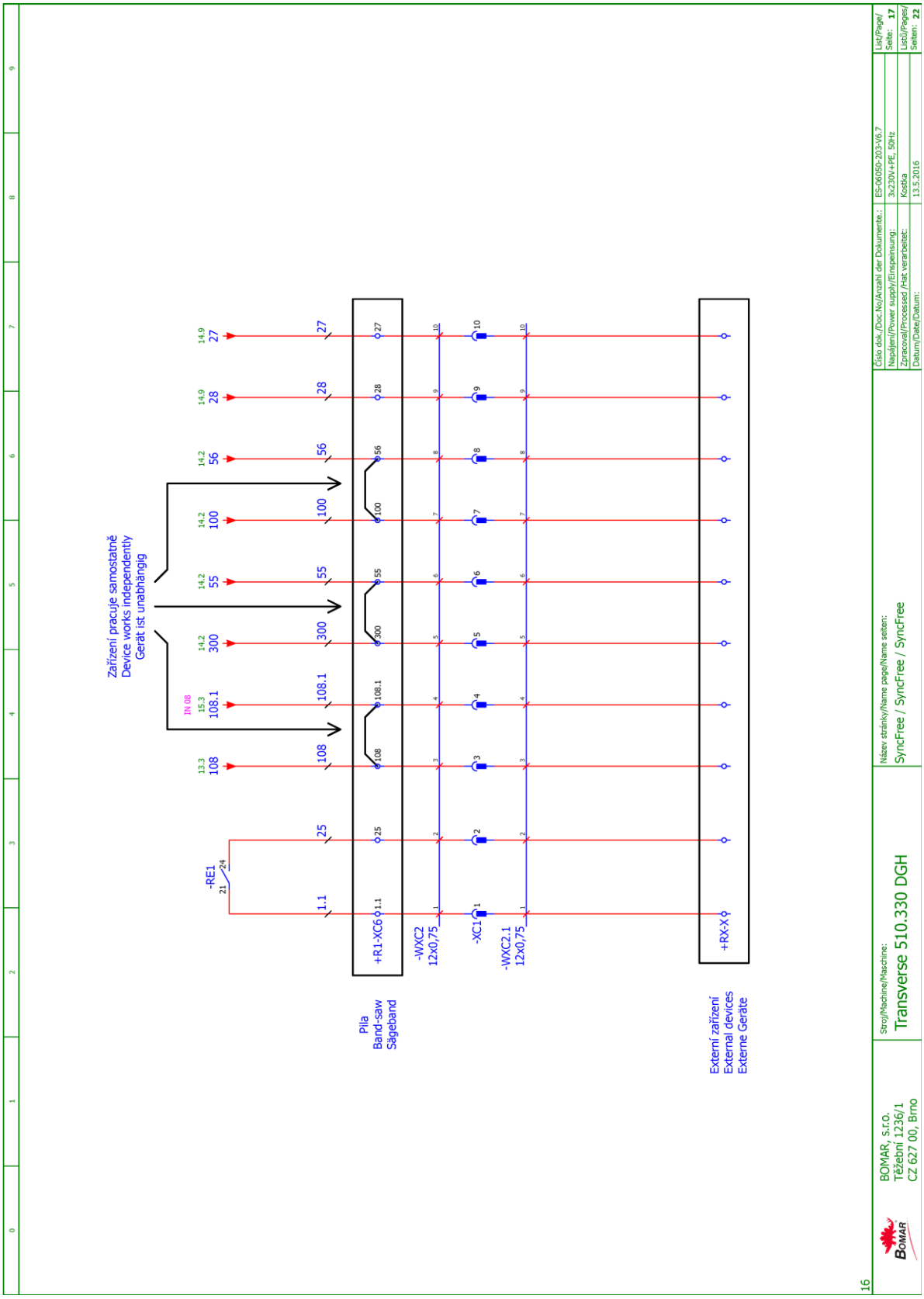
Zařízení pracuje samostatně
Device works independently
Gerät ist unabhängig
-RE1
+R1-XC6
-WXC2
12x0,75
-XC1
-WXC2.1
12x0,75
+RX-X
Pila
Band-saw
Sägeband
Externí zařízení
External devices
Externe Geräte
BOMAR, s.r.o.
Těžební 1236/1
CZ 627 00, Brno
Stroj/Machine/Maschine:
Transverse 510.330 DGH
Název stránky/Name page/Name seiten:
SyncFree / SyncFree / SyncFree
Číslo dok./Doc.No/Anzahl der Dokumente.:
ES-06050-203-V6.7
Napájení/Power supply/Einspeisung:
3x230V+PE, 50Hz
Zpracoval/Processed /Hat verarbeitet:
Kostka
Datum/Date/Datum:
13.5.2016
List/Page/
Seite: 17
Listů/Pages/
Seiten: 22
16

## 6.3. Hydraulické schéma / Hydraulikschema / Hydraulic diagram



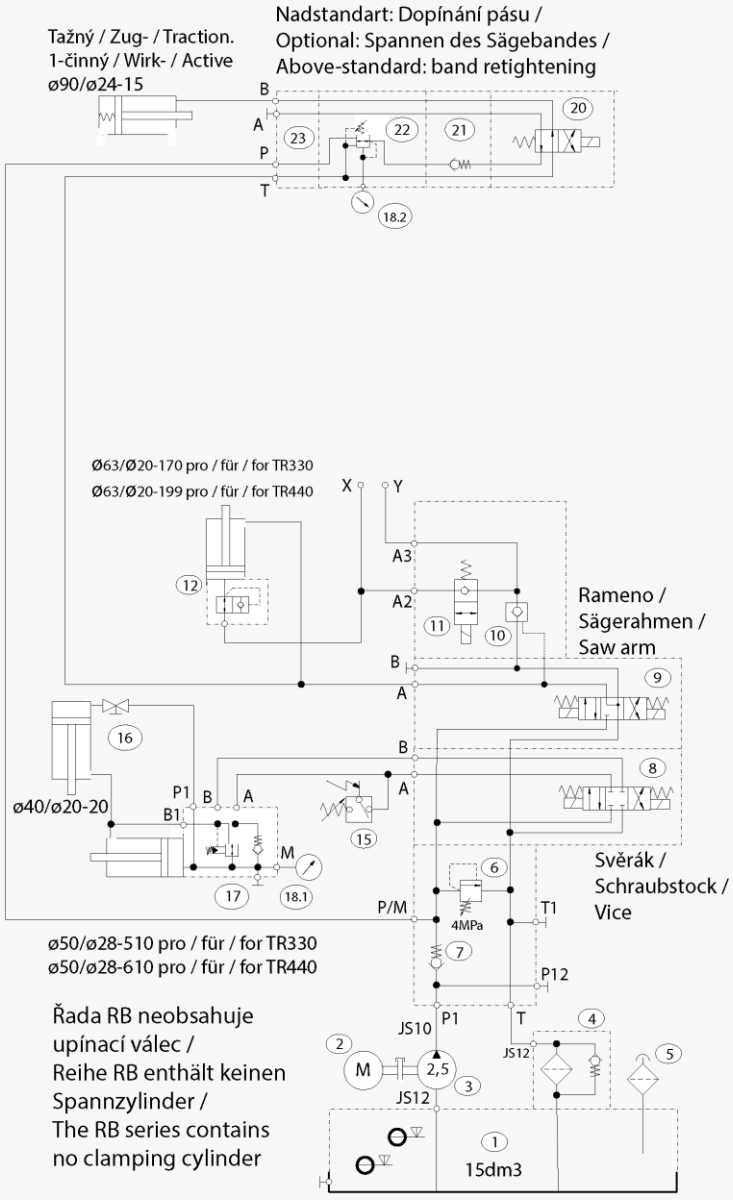


205.1816-100
TRANSVERSE 330 DGH
TRANSVERSE 440DGH
04.11.2013
Platí také pro řadu RB (330,440) /
auch für die Reihe
RB (330,440) gültig /
applies to the
RB (330,440) series as well

| | |
|---|---|
| **Typ / Type / Type** | Transverse 330, 440 DGH/ RB 330, 440 |
| **Hydraulický agregát / Hydroaggregat / Hydro aggregat** | 92.001.069, C.f.FMV: S001-059-4, PPM-AC0, 25-PG1/2,5-TM13-CB03-FR |
| **Neuvedené světlosti / Unerwähnt Lichtbreite / Unlisted inside diameters** | JS6 |
| **Výstupní šroubení / Ausgangschraubung / Output screewing** | G1/4" |

| | |
|---|---|
| Pmax | 4 MPa |
| Q | 3,3 dm³/min |
| n | 1400 ot./min |
| P | 0,25 kW |

Regulační závlek
Stroje velikosti 330 /
Regelungskreis der Anlage für
Andruck in den Schnitt, Größe 330 /
control circuit for the machine size 330

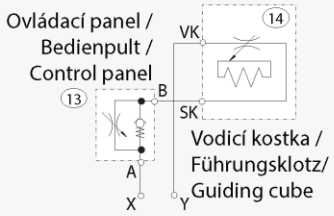


Regulační závlek
Stroje velikosti 440 /
Regelungskreis der Anlage für
Andruck in den Schnitt, Größe 440 /
control circuit for the machine size 440

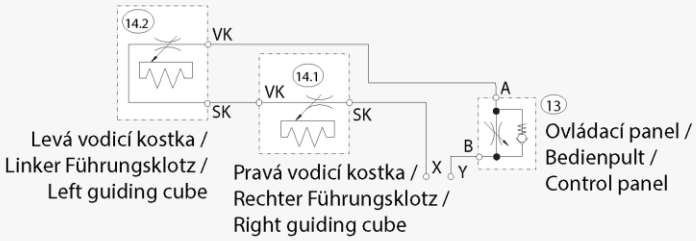


- 2 varianty regulačního závleku okruhu ramena, spojovací body X,Y u strojů velikosti 330 je pouze jedna kostka poz.14/
  2 Varianten des Regelungskreises des Sägerahmens für Andruck in den Schnitt, Verbindungspunkte X, Ybei den Anlage Gr. 280 und 350 ist nur ein Würfel, Pos. 14/
  2 versions of the control circuit of the arm, connecting points X, Y for the machine size 280 and 350, there is only one cube, pos.14
- Regulace upánací síly (prvky č. 16+17+18) jen na přání zákazníka /
  Regelung der Spannkraft (Elemente Nr. 16+17+18) nur auf Wunsch des Kunden /
  Clamping force control (elements No. 16+17+18) by customer's request only

205.1816-100
TRANSVERSE 330 DGH
TRANSVERSE 440DGH
04.11.2013
Platí také pro řadu RB (330,440) /
auch für die Reihe
RB (330,440) gültig /
applies to the
RB (330,440) series as well

| | |
|---|---|
| **Typ / Type / Type** | Transverse 330, 440 DGH/ RB 330, 440 |
| **Hydraulický agregát / Hydroaggregat / Hydro aggregat** | 92.001.069, C.f.FMV: S001-059-4, PPM-AC0, 25-PG1/2,5-TM13-CB03-FR |
| **Neuvedené světlosti / Unerwähnt Lichtbreite / Unlisted inside diameters** | JS6 |
| **Výstupní šroubení / Ausgangschraubung / Output screewing** | G1/4" |
| Pmax | 4 MPa |
| Q | 3,3 $dm^3$/min |
| n | 1400 ot./min |
| P | 0,25 kW |

| Poz. | Název položky | | ks | Číslo skladové položky |
|---|---|---|---|---|
| Pos. | Bezeichnung | | Menge | Artikelnummer im Lagerhaus |
| Pos. | Item | | Pcs. | Stock Item Number |
| | Nádrž / Behälter / Tank | TM13,5/S, 13dm3 | 1 | |
| 2 | Elektromotor / Elektromotor / Electromotor | EM 71 0,25kW/3 B35, 400/230V 50Hz | 1 | 91.001.258 |
| 3 | Hydrogenerátor / Hydraulikaggregat / Hydrogenerator | 10A2,5X053G, 2,5 cm3/ot. | 1 | 92.153.132 |
| 4 | Zpětný filtr / Filter / Filter | W79 | 1 | 92.153.119 |
| 5 | Nálevací zátka / Stopfen / Plug | CPT-MD-FA/1" | 1 | 92.019.007 |
| 6 | Přepouštěcí ventil / Bypaßventil / By pas valve | MO – 020/10 | 1 | 92.159.001 |
| 7 | Zpětný ventil / Gegendruckventil / Clack-valve | CVG 14 | 1 | |
| 8 | Rozváděč / Verteilungsventil / Distributor | DVE03-S01-B4-C24/20/T1-M1+K1 | 1 | 92.101.041 |
| 9 | Rozváděč / Verteilungsventil / Distributor | DVE03-S04-B5-C24/20/T1-M1+K1 | 1 | 92.101.034 |
| 10 | Hydraulický zámek / Hydraulisches Schloß / Hydraulic lock | PC08-30-0-N | 1 | 92.103.007 |
| 11 | Rozváděč / Verteilungsventil / Distributor | SV08-20-0-N-24EG, | 1 | 92.101.035 |
| 12 | Ventil pojistný / Sicherungsventil / Retaining valve | VPNH 1/4" | 1 | 92.151.001 |
| 13 | Ventil škrtící / Drosselventil / Choke | VS01-04/R2-OS | 1 | 92.152.004 |
| 14 | Kostka regulace / Regulationklotz / Regulation cube | manual, 251.077 | 2/1 | 251.077 |
| 15 | Tlakový spínač / Druckschalter / Pressure switch | 0166415031059, 20-50 bar | 1 | 92.201.003 |
| 16 | Kulový ventil / Kugelventil / Globe valve | | 1/0 | 99.260.004 |
| 17 | Redukční ventil / Reduktionsventil / Control valve | VRN2-06/S-6R (252.001) | 1/0 | 92.154.001 |
| 18 | Manometr / Manometer / Manometer | D68, RAD., 0-60 bar | 1/0 | |
| 19 | | | | |
| 20 | Rozváděč / Verteilungsventil / Distributor | RPE3-042R11/02400E1K1 | 1/0 | 92.101.001 |
| 21 | Jednosměrný ventil / Einwegventil / One-way valve | VJ01-04/MP-30 | 1/0 | 92.104.001 |
| 22 | Redukční ventil / Reduktionsventil / Control valve | VRP-04-PS/6,3 | 1/0 | 92.154.003 |
| 23 | Deska / Platte / Plate | DK1-04/32-2 | 1/0 | 92.105.008 |

# 7. Výkresy sestav pro objednání náhradních dílů / Zeichnungen für Bestellung der Ersatzteile / Drawing assemblies for spare parts order

- Při objednávání náhradních dílů vždy uvádějte: typ stroje (např. Transverse 510.330 DGH) , výrobní číslo (např. 125) a rok výroby (např. 1999).

- In die Bestellung der Ersatzteile führen Sie immer an: Maschinentyp (z. B. Transverse 510.330 DGH), Serien Nr. (z. B. 125) und Baujahr (z. B. 1999).

- For spare parts order, you must always to allege: type of machine (for example Transverse 510.330 DGH), serial number (for example 125, see cover page) and year of construction (for example 1999).

## 7.1. Transverse 510.330 DGH

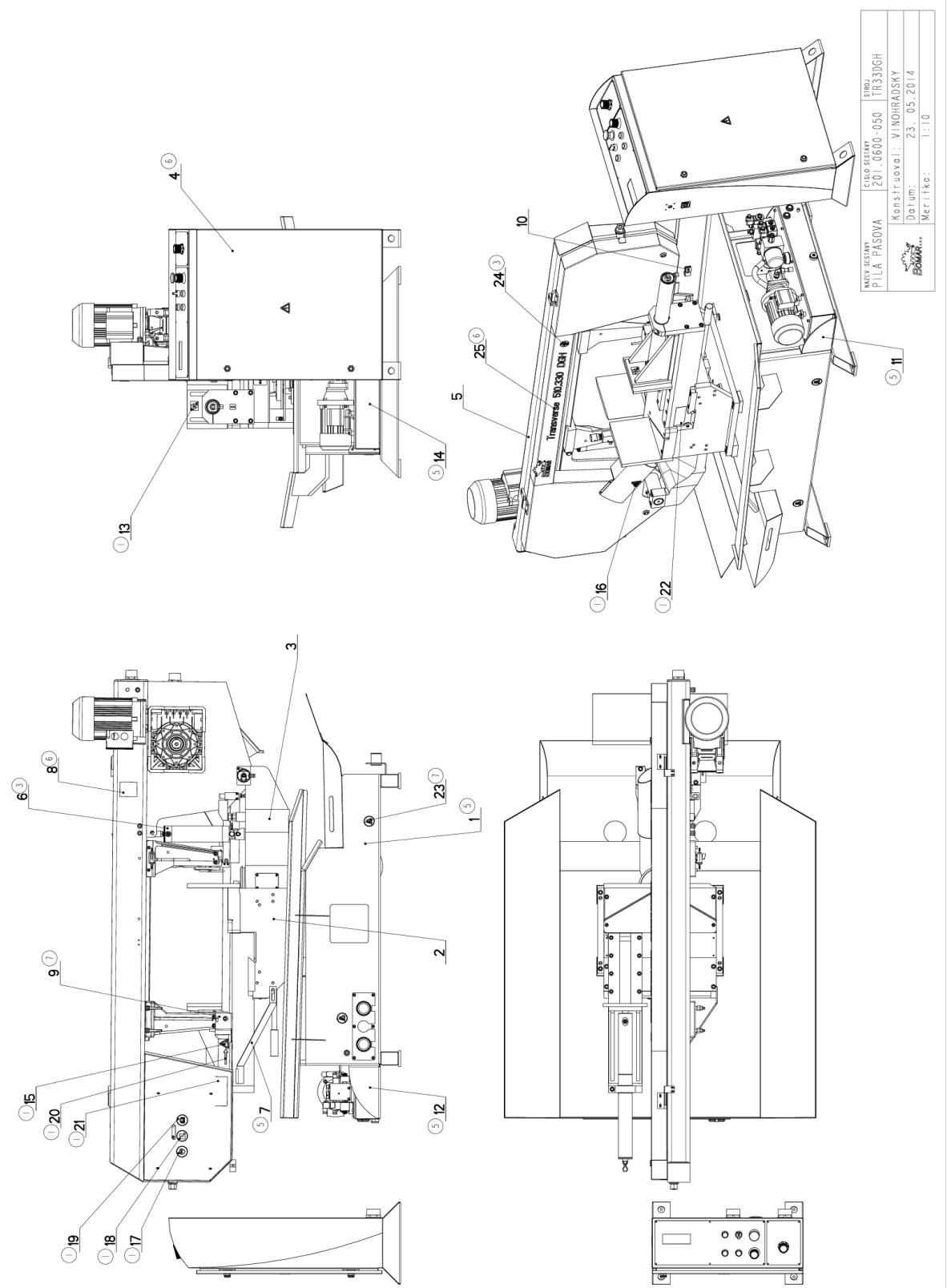

| Cislo Sestavy | Ver. | Nazev sestavy |
|---|---|---|
| 201.0600-050 | 7 | PILA PASOVA/BAND SAW/BANDSÄGE |

| Poz. | Objednaci cislo | Ver. | Nazev polozky | Rozmer | Ks |
|---|---|---|---|---|---|
| 1 | 201.0601-600 (5) | 2 | PODSTAVEC / BASE / UNTERSATZ | SESTAVA | 1 |
| 2 | 201.0603-000 | 0 | SVERAK / VICE / SCHRAUBSTOCK | | 1 |
| 3 | 201.1802-000 | 3 | KONZOLA OTOCNA / TURNABLE CONSOL / DREHKONSOLE | | 1 |
| 4 | 201.1830-000 (6) | 1 | OVLADACI PANEL / CONTROL PANEL / BEDIENPULT | | 1 |
| 5 | 201.2904-050 | 11 | RAMENO / SHOULDER / SÄGERAHMEN | | 1 |
| 6 | 201.2907-100 (3) | 3 | VALEC ZVEDACI / LIFTING CYLINDER / HEBEZYLINDER | | 1 |
| 7 | 30.0601-605 | 0 | DRZAK / HOLDER / HALTER | P 5x211 | 1 |
| 8 | 30.0699-102 (6) | 0 | STITEK / LABEL / SCHILD | P 0.5x65 | 1 |
| 9 | 30.0814-157 (7) | 0 | KRYT PASU / BELT COVER / BANDABDECKUNG | | 1 |
| 10 | 30.9307-109 | 1 | DRZAK / HOLDER / HALTER | HR 25x4 | 2 |
| 11 | 30.M201-005 (5) | 2 | DRZAK / HOLDER / HALTER | P 4x173 | 1 |
| 12 | 30.M201-006 (5) | 2 | DRZAK / HOLDER / HALTER | P 4x173 | 1 |
| 13 | 31.3199-005 (1) | 0 | SAMOLEPKA / STICKER / AUFKLEBER | | 1 |
| 14 | 92.001.069 (5) | 0 | AGREGAT HYDRAULICKY / HYDRAULIC GENERATOR / HYDRAULIKAGGREGAT | FMV | 1 |
| 15 | 99.900.040 (1) | 0 | SAMOLEPKA / STICKER / AUFKLEBER | | 1 |
| 16 | 99.900.043 (1) | 0 | SAMOLEPKA / STICKER / AUFKLEBER | | 1 |
| 17 | 99.900.047 (1) | 0 | SAMOLEPKA / STICKER / AUFKLEBER | | 1 |
| 18 | 99.900.048 (1) | 0 | SAMOLEPKA / STICKER / AUFKLEBER | | 1 |
| 19 | 99.900.049 (1) | 0 | SAMOLEPKA / STICKER / AUFKLEBER | | 1 |
| 20 | 99.900.053 (1) | 0 | SAMOLEPKA / STICKER / AUFKLEBER | | 1 |
| 21 | 99.900.055 (1) | 0 | SAMOLEPKA / STICKER / AUFKLEBER | | 1 |
| 22 | 99.900.056 (1) | 0 | SAMOLEPKA / STICKER / AUFKLEBER | | 1 |
| 23 | 99.900.068 (7) | 0 | SAMOLEPKA / STICKER / AUFKLEBER | pouziti vysokozvizneno vozikku | 4 |
| 24 | 99.901.032 (3) | 0 | SAMOLEPKA / STICKER / AUFKLEBER | CETIFIKACNI SAMOLEPKA | 1 |
| 25 | 99.901.069 (6) | 0 | SAMOLEPKA / STICKER / AUFKLEBER | | 1 |

1.DOPLNENY BEZPECNOSTNI STITKY - 1x99.900.040, 1x99.900.043, 1x99.900.047, 1x99.900.048, 1x99.900.049, 1x99.900.053, 1x99.900.055, 1x99.900.056, 1x31.3199-005, 1xTYPOVY STITEK 31.0699-101. 324/ZM390 19.10.2007 SLEZACKOVA
2.DOPLNEN STITEK RYCHLOSTI PASU 30.0599-008 . 367/ZM011 17.1.2008 SLEZACKOVA
3.PRID.CERTIFIKACNI NALEPKA 99.901.032,ZRUS.VALEC 201.2907-000 A NAHR.201.2907-100. 040/ZM264 1.10.2010 SLEZACKOVA
4.PRIDAN KRYT PASU 30.0814-107. ZM224 25.7.2012 SLEZACKOVA
5.ZRUS.PODST. 201.0601-000 NAHR.201.0601-600; ZRUS. OVL.PANEL 201.3414-900 A ROZVADEC 31.1830-005 A NAHR. 201.R230-300 ZRUS.AGREGAT 92.001.001 A NAHR.92.001.069; 094/ZM109 11.4.2013 MAJDIC
6.PRID. SAMOLEPKA 99.901.069,ZRUS.TYPOVY STITEK 31.0699-101 A NAHR.30.0699-102,ZRUS.OVLADACI PANEL 201.R230-300 A NAHR.201.1830-000 264/ZM275 19.11.2013 SLEZACKOVA
7.ZRUS.KRYT PASU 30-0814-107 A NAHR.30.0814-157,PRIDANA 4xSAMOLEPKA 99.900.068. 090/ZM113 23.5.2014 SLEZACKOVA

Cislo Sestavy/Number of assembly/Nummer der Baugruppe; Verze (Ver.)/Version/Version; Nazev sestavy/Assembly title/Name der Baugruppe; Pozice (Poz.)/Position/Position; Objednaci cislo/Purchase order number/Bestellnummer; Nazev polozky/Volume title/Name der Position; Rozmer/Stock size/Abmessung

## 7.3. Podstavec / Base / Untersatz

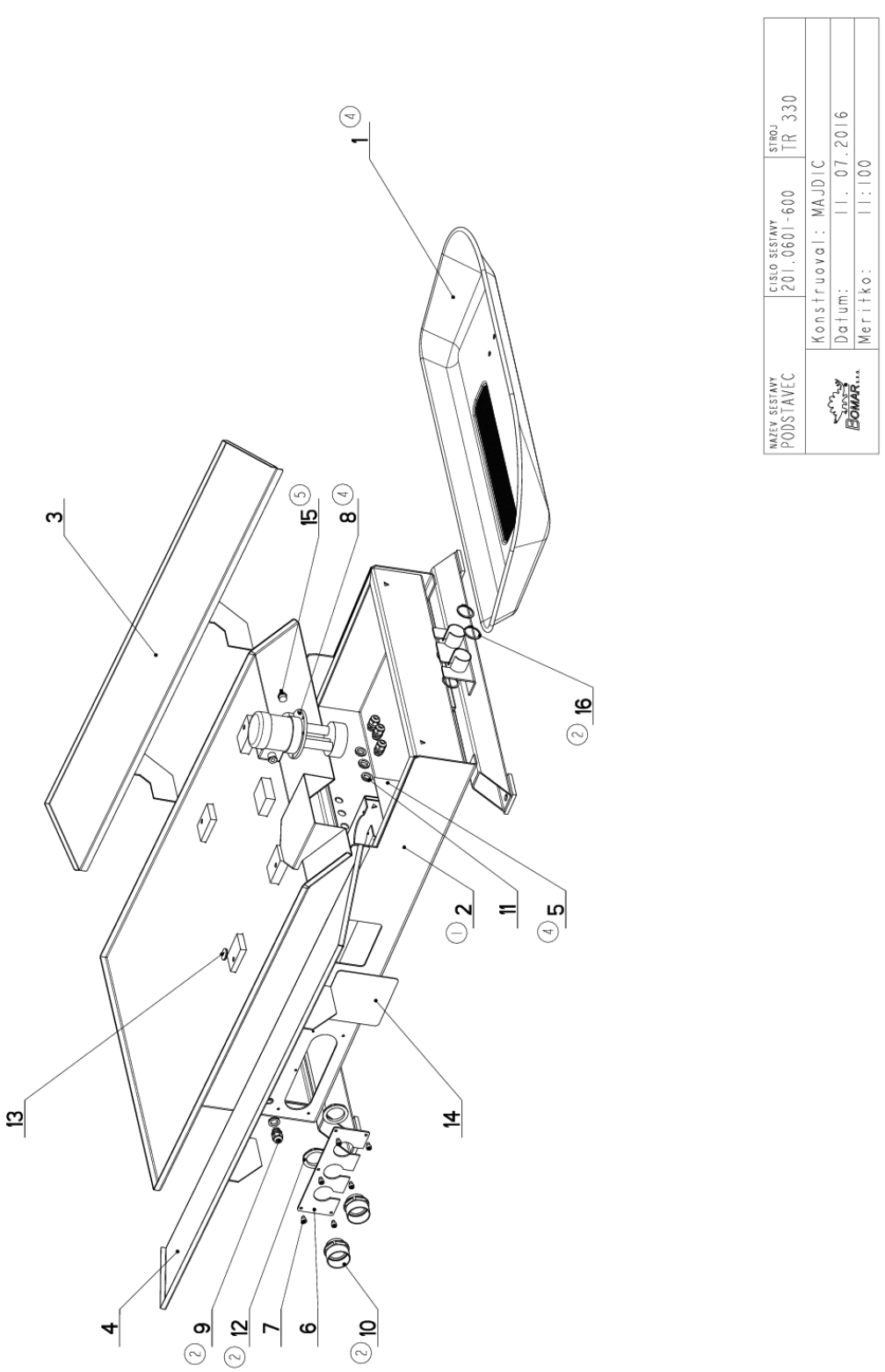

## 7.4. Kusovník / Piece list / Stückliste -Podstavec / Base / Untersatz

| Cislo Sestavy | Ver. | Nazev sestavy |
|---|---|---|
| 201.0601-600 | 5 | PODSTAVEC/BASE/UNTERSATZ |

| Poz. | Objednaci cislo | Ver. | Nazev polozky | Rozmer | Ks |
|---|---|---|---|---|---|
| 1 | 201.M201-020 (4) | 0 | VANA / TANK / WANNE | | 1 |
| 2 | 30.0601-201 (1) | 4 | PODSTAVEC / BASE / UNTERSATZ | | 1 |
| 3 | 30.0601-602 | 1 | OKAP / GUTTER CHANNEL / BLECH | SVARENEC | 1 |
| 4 | 30.0601-603 | 1 | OKAP / GUTTER CHANNEL / BLECH | SVARENEC | 1 |
| 5 | 30.M201-015 (4) | 0 | PLECH / PLATE / BLECH | P 1,5x119 | 1 |
| 6 | 30.R201-056 (1) | 1 | VIKO / COVER / DECKEL | P 4x100 | 1 |
| 7 | 90.001.25.028 | 0 | SROUB IMBUS / ALLEN HEAD BOLT / IMBUSSCHRAUBE | M8X10 | 6 |
| 8 | 91.020.032 (4) | 0 | CERPADLO CHLAZENI / COOLING PUMP / KÜHLMITTELPUMPE | 230/400V | 1 |
| 9 | 91.070.012 (2) | 0 | VYVODKA / BUSHING / TŮLLE | M20x1.5 | 4 |
| 10 | 91.071.022 (2) | 0 | VYVODKA / BUSHING / TŮLLE | | 2 |
| 11 | 91.072.012 (2) | 0 | MATICE / NUT / MUTTER | | 4 |
| 12 | 91.072.016 (2) | 0 | MATICE / NUT / MUTTER | | 2 |
| 13 | 91.074.013 | 0 | UCPAVKA / PLUG / STOPFEN | M25x1,5 | 1 |
| 14 | 94.101.039 | 0 | ZASLEPKA / PLUG / BLINDFLANSCH | 154x154x4 | 1 |
| 15 | 94.202.020 (5) | 0 | REDUKCE / REDUCTION / ADAPTOR / REDUKTION | 1/2"-6 | 1 |
| 16 | 95.800.016 | 0 | SEGR HRIDEL. / OUTSIDE SAFETY RING / SICHERUNGSRING AUSSEN | POJISTNY KROUZEK 42 | 4 |

1.ZRUS.PODSTAVEC 30.0601-601 A NAHR.30.0601-201,ZRUS.DRZAK 30.0601-604 A NAHR.30.R201-056. 094/ZM170 11.6.2013 SLEZACKOVA
2.PRID.1xVYVODKA M20x1,5(91.070.012),1xMATICE M20x1,5(91.072.012),2xVYVODKA M50x1,5(91.071.022),2xMATICE M50x1,5 (91.072.016). 264/ZM275 19.11.2013 SLEZACKOVA

3.PRIDAN KRYT 30.M201-014. 222/ZM280 14.12.2015 SLEZACKOVA

4.ZRUS.VANA 30.M201-010 A NAHR.201.M201-020,ZRUS.CERPADLO 91.020.004 A NAHR.91.020.032,ZRUS.PLECH 30.M201-014 A NAHR. 30.M201-015,ZRUS.SKLUZ 30.M301-020. 024/ZM028 10.2.2016 SLEZACKOVA

5.ZRUSENA REDUKCE 94.202.021 A NAHR.94.202.020. 024/ZM200 11.7.2016 SLEZACKOVA

Cislo Sestavy/Number of assembly/Nummer der Baugruppe; Verze (Ver.)/Version/Version; Nazev sestavy/Assembly title/Name der Baugruppe; Pozice (Poz.)/Position/Position; Objednaci cislo/Purchase order number/Bestellnummer; Nazev polozky/Volume title/Name der Position; Rozmer/Stock size/Abmessung

## 7.5. Vana/ Tank/ Wanne

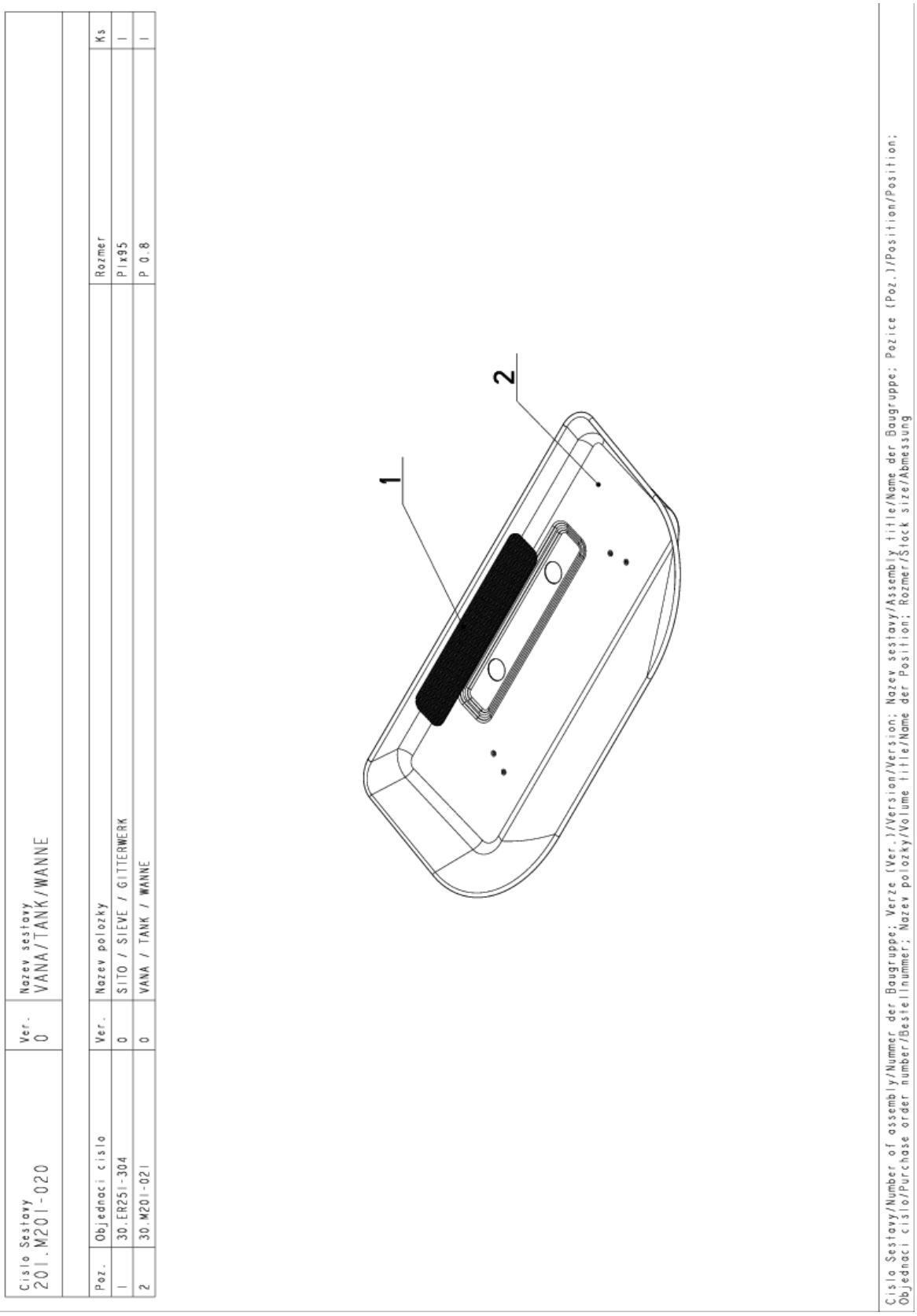

## 7.6. Svěrák / Vice / Schraubstock

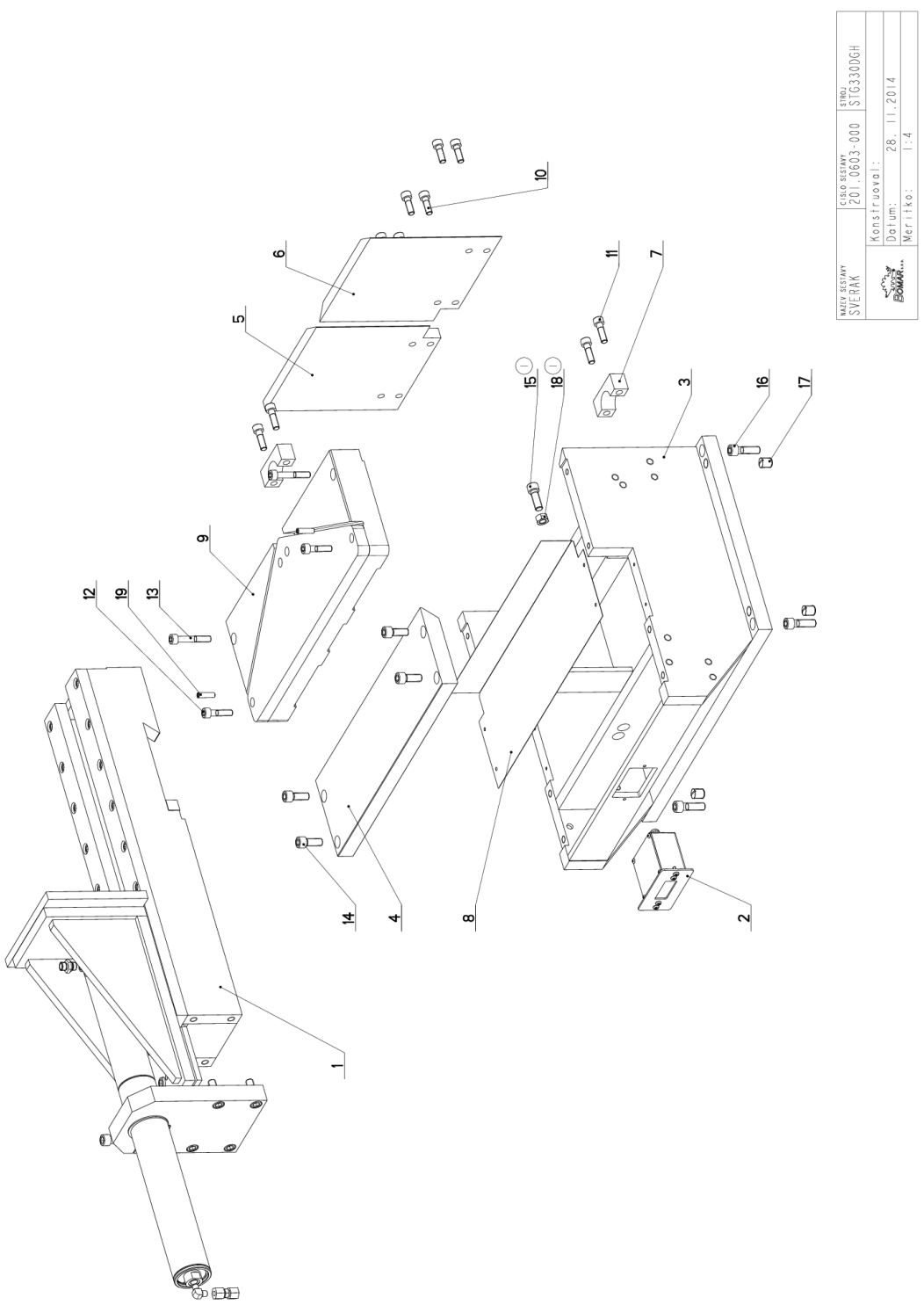

## 7.7. Kusovník / Piece list / Stückliste - Svěrák / Vice / Schraubstock

| Cislo Sestavy | Ver. | Nazev sestavy |
|---|---|---|
| 201.0603-000 | 1 | SVERAK/VICE/SCHRAUBSTOCK |

| Poz. | Objednaci cislo | Ver. | Nazev polozky | Rozmer | Ks |
|---|---|---|---|---|---|
| 1 | 201.0603-200 | 1 | SVERAK / VICE / SCHRAUBSTOCK | | 1 |
| 2 | 201.2903-100 | 0 | DISPLEJ / DISPLAY / DISPLAY | | 1 |
| 3 | 30.0609-001 | 1 | PODSTAVEC SVERAKU / VICE BASE / SCHRAUBSTOCKUNTERSATZ | | 1 |
| 4 | 30.0809-002 | 1 | VEDENI / GUIDE / BACKENFÜHRUNG | HR 150 x 30 | 1 |
| 5 | 30.0809-005 | 0 | CELIST PEVNA / SOLID JAW / FESTE BACKE | 240x20 | 1 |
| 6 | 30.0809-006 | 0 | CELIST PEVNA / SOLID JAW / FESTE BACKE | 240x20 | 1 |
| 7 | 30.0809-010 | 1 | PRILOZKA / STRAP / LASCHE | HR 30 x 25 | 2 |
| 8 | 30.0809-011 | 0 | KRYT / COVER / ABDECKUNG | P 0.5-219 | 1 |
| 9 | 30.0809-012 | 0 | DESKA / BOARD / PLATTE | | 1 |
| 10 | 90.001.25.048 | 0 | SROUB IMBUS / ALLEN HEAD BOLT / IMBUSSCHRAUBE | M10X30 | 8 |
| 11 | 90.001.25.049 | 0 | SROUB IMBUS / ALLEN HEAD BOLT / IMBUSSCHRAUBE | M10X35 | 4 |
| 12 | 90.001.25.050 | 0 | SROUB IMBUS / ALLEN HEAD BOLT / IMBUSSCHRAUBE | M10X40 | 2 |
| 13 | 90.001.25.054 | 0 | SROUB IMBUS / ALLEN HEAD BOLT / IMBUSSCHRAUBE | M10X60 | 2 |
| 14 | 90.001.25.058 | 0 | SROUB IMBUS / ALLEN HEAD BOLT / IMBUSSCHRAUBE | M12X30 | 4 |
| 15 | 90.001.25.059 (1) | 0 | SROUB IMBUS / ALLEN HEAD BOLT / IMBUSSCHRAUBE | M12X35 | 1 |
| 16 | 90.001.25.060 | 0 | SROUB IMBUS / ALLEN HEAD BOLT / IMBUSSCHRAUBE | M12X40 | 4 |
| 17 | 90.002.20.019 | 0 | SROUB STAVECI / ADJUSTMENT BOLT / STELLSCHRAUBE | SROUB M16X20 | 4 |
| 18 | 90.100.55.007 (1) | 0 | MATICE / NUT / MUTTER | MATICE _ M12 | 1 |
| 19 | 90.302.02.002 | 0 | KUZEL. KOLIK S ZAV. / TAPER PIN + THREAD / KEGELBOLZEN + GEWINDE | KOLIK 8X30 | 2 |

1.PRIDAN 1xSROUB M12x35(90.001.25.059),1xMATICE M12(90.100.55.007). 125/ZM244 28.11.2014 SLEZACKOVA

Cislo Sestavy/Number of assembly/Nummer der Baugruppe; Verze (Ver.)/Version/Version; Nazev sestavy/Assembly title/Name der Baugruppe; Pozice (Poz.)/Position/Position; Objednaci cislo/Purchase order number/Bestellnummer; Nazev polozky/Volume title/Name der Position; Rozmer/Stock size/Abmessung

## 7.8. Svěrák / Vice / Schraubstock

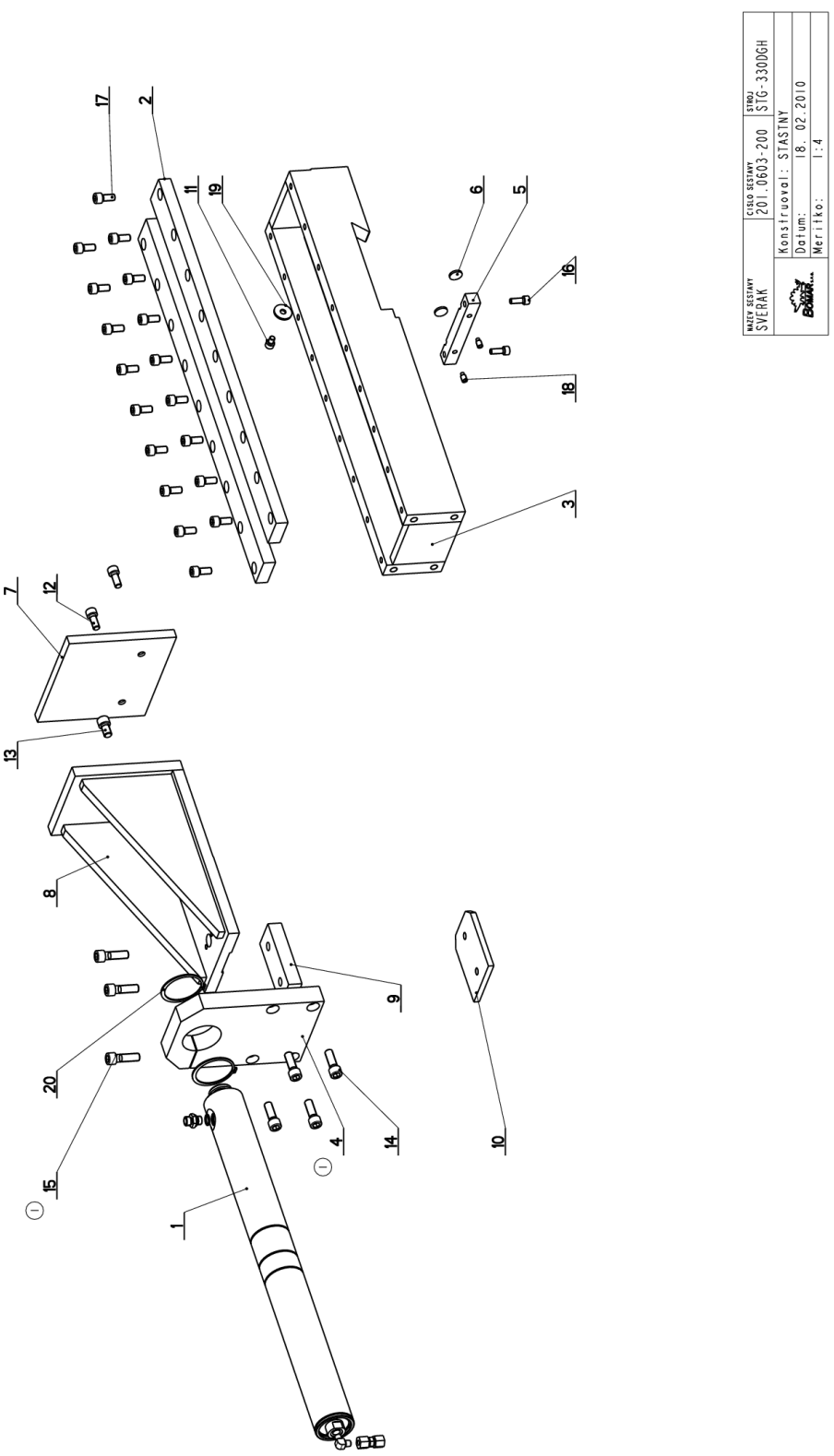

## 7.9. Kusovník / Piece list / Stückliste - Svěrák / Vice / Schraubstock

| Cislo Sestavy | Ver. | Nazev sestavy |
|---|---|---|
| 201.0603-200 | 1 | SVERAK/VICE/SCHRAUBSTOCK |

| Poz. | Objednaci cislo | Ver. | Nazev polozky | Rozmer | Ks |
|---|---|---|---|---|---|
| 1 | 201.0607-100 | 0 | VALEC / ROLLER / ZYLINDER | | 1 |
| 2 | 30.0603-002 | 1 | LISTA / TRIM / LEISTE | HR 50x20 | 2 |
| 3 | 30.0603-003 | 2 | SVERAK / VICE / SCHRAUBSTOCK | | 1 |
| 4 | 30.0603-006 (1) | 0 | CELO / HEAD / STIRN | HR 150x 30 | 1 |
| 5 | 30.0803-004 | 0 | LISTA SVERAKU / VICE TRIM / SCHRAUBSTOCKLEISTE | HR 20x 20 | 1 |
| 6 | 30.0803-005 | 0 | DESKA / BOARD / PLATTE | | 2 |
| 7 | 30.0803-006 | 0 | CELIST / JAW / BACKE | HR 200x16 | 1 |
| 8 | 30.1803-003 | 3 | CELIST POHYBLIVA / MOVING JAW / BEWEGLICHE BACKE | | 1 |
| 9 | 30.1803-004 | 3 | KOSTKA VODICI / LEAD CUBE / FÜHRUNGSKLOTZ | HR 50x 25 | 1 |
| 10 | 30.1803-005 | 1 | DESKA / BOARD / PLATTE | HR 120 x 10 | 1 |
| 11 | 90.001.25.029 | 0 | SROUB IMBUS / ALLEN HEAD BOLT / IMBUSSCHRAUBE | M8X12 | 1 |
| 12 | 90.001.25.047 | 0 | SROUB IMBUS / ALLEN HEAD BOLT / IMBUSSCHRAUBE | M10X25 | 2 |
| 13 | 90.001.25.056 | 0 | SROUB IMBUS / ALLEN HEAD BOLT / IMBUSSCHRAUBE | M12x20 | 1 |
| 14 | 90.001.25.059 | 0 | SROUB IMBUS / ALLEN HEAD BOLT / IMBUSSCHRAUBE | M12X35 | 4 |
| 15 | 90.001.25.060 (1) | 0 | SROUB IMBUS / ALLEN HEAD BOLT / IMBUSSCHRAUBE | M12X40 | 3 |
| 16 | 90.001.25.104 | 0 | SROUB IMBUS / ALLEN HEAD BOLT / IMBUSSCHRAUBE | M8X22 | 2 |
| 17 | 90.001.25.106 | 0 | SROUB IMBUS / ALLEN HEAD BOLT / IMBUSSCHRAUBE | M10X22 | 18 |
| 18 | 90.004.2D.008 | 0 | SROUB STAVECI / ADJUSTMENT BOLT / STELLSCHRAUBE | SROUB M8X16 | 2 |
| 19 | 90.151.50.005 | 0 | PODLOZKA / WASHER / UNTERLEGSCHEIBE | PODLOZKA 8 | 1 |
| 20 | 95.800.021 | 0 | SEGR HRIDEL. / OUTSIDE SAFETY RING / SICHERUNGSRING AUßEN | POJISTNY KROUZEK 62 | 2 |

1.VYMENA CEL - ZRUS.SOUC. 30.0603-004 A NAHR. 30.0603-006,ZRUS.2xSROUB STAVECI M8x16 90.002.2D.012,2xSROUB STAVECI M8x10 90.002.2D.011.
PRIDAN SROUB IMBUS M12x40 90.001.25.060. 23/ZM366 1.10.2007 SLEZACKOVA

Cislo Sestavy/Number of assembly/Nummer der Baugruppe; Verze (Ver.)/Version/Version; Nazev sestavy/Assembly title/Name der Baugruppe; Pozice (Poz.)/Position/Position; Objednaci cislo/Purchase order number/Bestellnummer; Nazev polozky/Volume title/Name der Position; Rozmer/Stock size/Abmessung

## 7.10. Válec / Roller / Zylinder

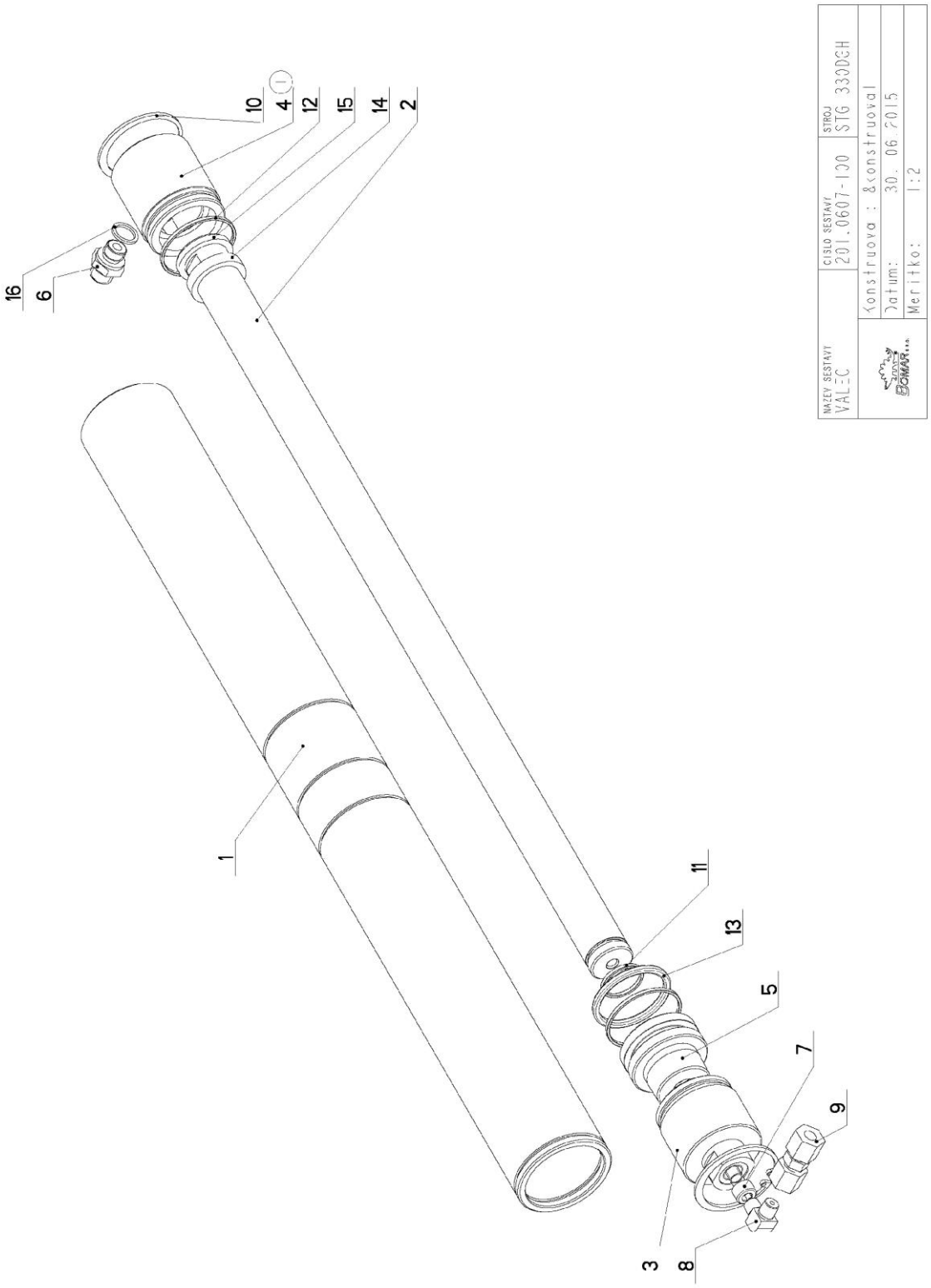

## 7.11. Kusovník / Piece list / Stückliste - Válec / Roller / Zylinder

| Cislo Sestavy | Ver. | Nazev sestavy |
|---|---|---|
| 201.0607-100 | 0 | VALEC/ROLLER/ZYLINDER |

| Poz. | Objednaci cislo | Ver. | Nazev polozky | Rozmer | Ks |
|---|---|---|---|---|---|
| 1 | 30.0607-101 | 2 | VALEC SVERAKU / VICE CYLINDER / SCHRAUBSTOCKZYLINDER | TR 62/50H8 | 1 |
| 2 | 30.0607-102 | 1 | PISTNICE / PISTON ROD / KOLBENSTANGE | d 28 | 1 |
| 3 | 30.1807-103 | 0 | VIKO / COVER / DECKEL | d 55 | 1 |
| 4 | 30.1807-104 (1) | 2 | VIKO / COVER / DECKEL | TYC 55 | 1 |
| 5 | 30.1807-105 | 2 | PIST / PISTON / KOLBEN | d 55 | 1 |
| 6 | 30.2807-109 | 0 | SROUBENI PRIME / DIRECT BOLTING / GERADE VERSCHRAUBUNG | | 1 |
| 7 | 90.001.25.083 | 0 | SROUB IMBUS / ALLEN HEAD BOLT / IMBUSSCHRAUBE | M8X30 | 1 |
| 8 | 92.004.001 | 0 | SROUBENI UHLOVE / ANGLE BOLTING / WINKELVERSCHRAUBUNG | 37701 | 1 |
| 9 | 92.007.101 | 0 | SPOJKA / JOINT / KUPPLUNG | P-GV-08L | 1 |
| 10 | 95.801.009 | 0 | SEGR DIRA / OUTSIDE SAFETY RING / SICHERUNGSRING AUSSEN | POJISTNY KROUZEK 52 | 2 |
| 11 | 96.002.011 | 0 | KROUZEK O DYNAMICKY / DYNAMIC O RING / O-RING DYNAMISCH | 24X2 | 1 |
| 12 | 96.002.019 | 0 | KROUZEK O DYNAMICKY / DYNAMIC O RING / O-RING DYNAMISCH | 46x2 NBR 70SH | 2 |
| 13 | 96.020.005 | 0 | KROUZEK TESNICI / SEAL RING / DICHTUNGSRING | 39.2X5.33 | 1 |
| 14 | 96.041.003 | 0 | TESNENI / SEALING / DICHTUNG | 601-28x36x7.1 | 1 |
| 15 | 96.060.003 | 0 | KROUZEK STIRACI / SCRAPER RING / ABSTREIFRING | KROUZEK STIRACI 28 | 1 |
| 16 | 96.082.002 | 0 | TESNENI / SEAL RING / DICHTUNGSRING | 13/17x1.5 CU | 1 |

(1) O-KROUZEK 96.002.014 NAHRAZEN MANZETOU 96.041.003 24.4.2003 ROZKOSNY

Cislo Sestavy/Number of assembly/Nummer der Baugruppe; Verze (Ver.)/Version/Version; Nazev sestavy/Assembly title/Name der Baugruppe; Pozice (Poz.)/Position/Position; Objednaci cislo/Purchase order number/Bestellnummer; Nazev polozky/Volume title/Name der Position; Rozmer/Stock size/Abmessung

## 7.12. Displej / Display / Display

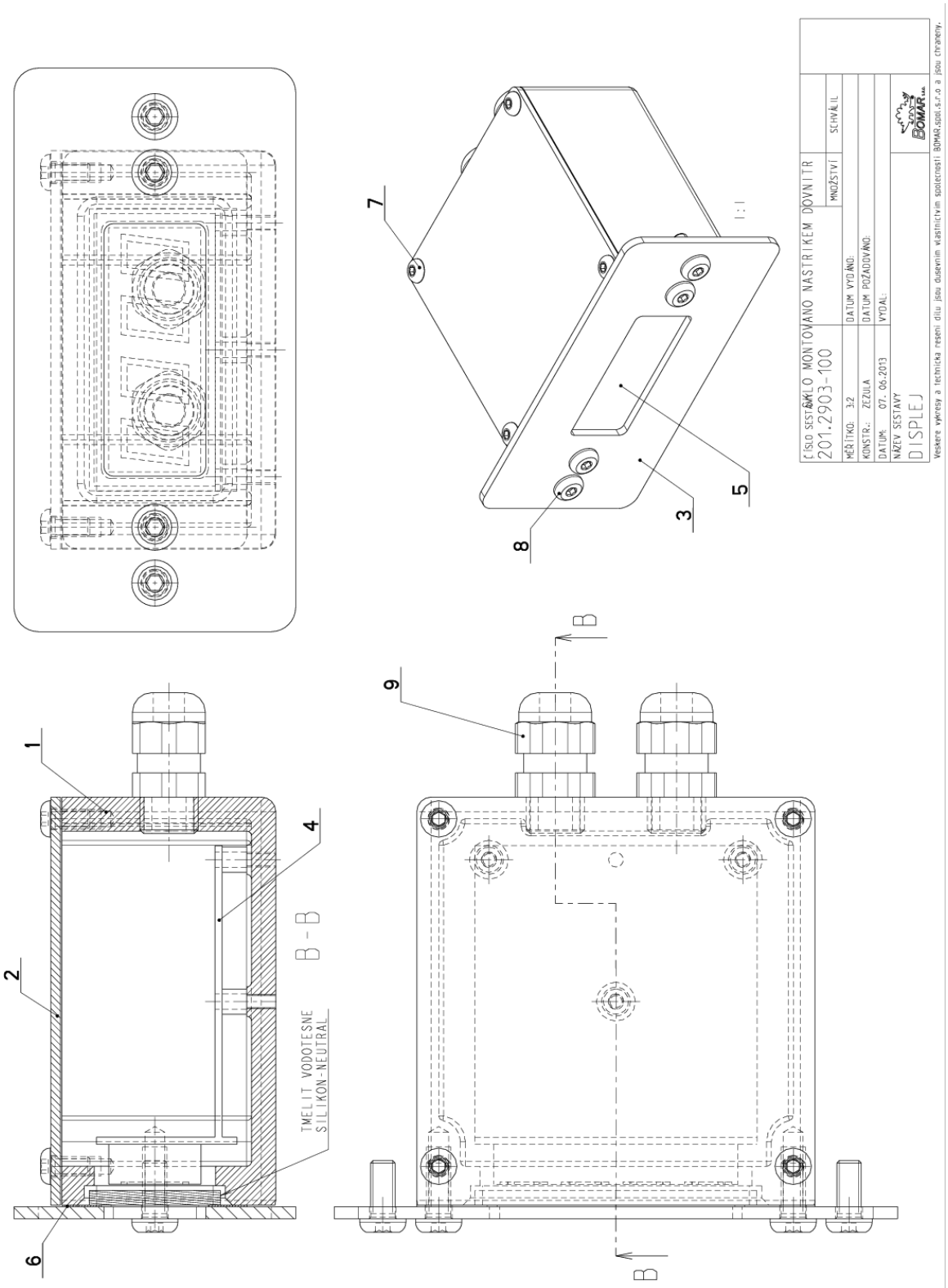

## 7.13. Kusovník / Piece list / Stückliste - Displej / Display / Display

| Cislo Sestavy | Ver. | Nazev sestavy |
|---|---|---|
| 201.2903-100 | 0 | DISPLEJ/DISPLAY/DISPLAY |

| Poz. | Objednaci cislo | Ver. | Nazev polozky | Rozmer | Ks |
|---|---|---|---|---|---|
| 1 | 30.2903-101 | 0 | KRABICE / BOX / DOSE | ODLITEK | 1 |
| 2 | 30.2903-103 | 0 | VIKO / COVER / DECKEL | P 2 - 82 | 1 |
| 3 | 30.2903-104 | 0 | CELO / HEAD / STIRN | P 2x58 | 1 |
| 4 | 31.0631-212 | 0 | DISPLEJ / DISPLAY / DISPLAY | DAS DARSTELLUNG | 1 |
| 5 | 31.2903-102 | 0 | SKLO ORGANICKE / PLEXIGLASS / PLEXIGLAS | TL. 3 - 27 | 1 |
| 6 | 31.2903-106 | 0 | TESNENI / SEALING / DICHTUNG | TL. 2.5 - 38 | 1 |
| 7 | 90.013.27.001 | | SROUB / BOLT / SCHRAUBE | M4x8 | 4 |
| 8 | 90.013.27.004 | 0 | SROUB PULKULATY / HALF ROUND BOLT / HALBRUNDSCHRAUBE | M5X12 | 4 |
| 9 | 91.070.010 | 0 | PRUCHODKA / LEADTHROUGH / DURCHFÜHRUNG | M12x1.5 CERNA | 2 |

Cislo Sestavy/Number of assembly/Nummer der Baugruppe; Verze (Ver.)/Version/Version; Nazev sestavy/Assembly title/Name der Baugruppe; Pozice (Poz.)/Position/Position; Objednaci cislo/Purchase order number/Bestellnummer; Nazev polozky/Volume title/Name der Position; Rozmer/Stock size/Abmessung

## 7.14. Konzola / Turnable comsol / Drehkonsole

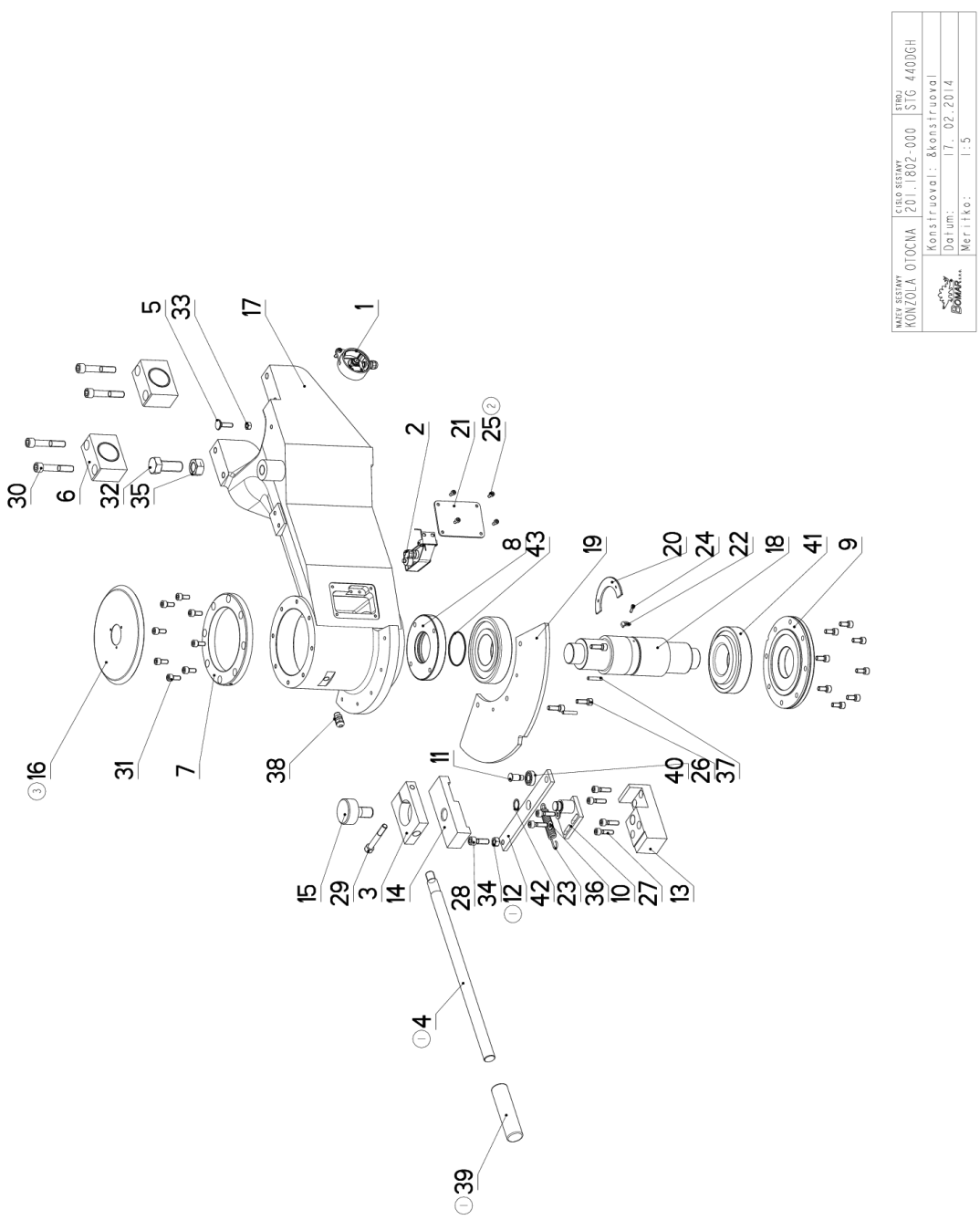

## 7.15. Kusovník / Piece list / Stückliste - Konzola / Turnable comsol / Drehkonsole

| Cislo Sestavy | Ver. | Nazev sestavy |
|---|---|---|
| 201.1802-000 | 3 | KONZOLA OTOCNA/TURNABLE CONSOL/DREHKONSOLE |

| Poz. | Objednaci cislo | Ver. | Nazev polozky | Rozmer | Ks |
|---|---|---|---|---|---|
| 1 | 201.0614-200 | 0 | ODMEROVANI / MEASURING / GEHRUNGSMESSUNG | | 1 |
| 2 | 201.2902-200 | 0 | SNIMAC / SENSOR / SENSOR | | 1 |
| 3 | 30.0702-004 | 0 | DRZAK / HOLDER / HALTER | HR 70x 20 | 1 |
| 4 | 30.0702-007 (1) | 1 | TYC / LEVER / HEBEL | d22 | 1 |
| 5 | 30.0702-013 | 0 | SROUB / BOLT / SCHRAUBE | M8 | 1 |
| 6 | 30.0802-002 | 1 | LOZISKO / BEARING / LAGER | | 2 |
| 7 | 30.0802-004 | 1 | VIKO / COVER / DECKEL | VYPALEK | 1 |
| 8 | 30.0802-005 | 1 | MATICE / NUT / MUTTER | D130 | 1 |
| 9 | 30.0802-006 | 1 | VIKO / COVER / DECKEL | d 180 | 1 |
| 10 | 30.0802-010 | 2 | CEP / LUG / BOLZEN | | 1 |
| 11 | 30.0802-011 | 0 | CEP / LUG / BOLZEN | d16 | 1 |
| 12 | 30.0802-013 (1) | 0 | PAKA / LEVER / HEBEL | HR 30 x 8 | 1 |
| 13 | 30.0809-007 | 0 | KOSTKA / CUBE / WÜRFEL | HR 50 x 50 | 1 |
| 14 | 30.0809-008 | 0 | UPINKA / FASTENER / SPANNEISEN | HR 50 x 30 | 1 |
| 15 | 30.0809-009 | 0 | SROUB / BOLT / SCHRAUBE | d 50 | 1 |
| 16 | 30.1802-105 (3) | 0 | KRYT / COVER / ABDECKUNG | P 1x200 | 1 |
| 17 | 30.2902-001 | 2 | KONZOLA OTOCNA / TURNABLE CONSOL / DREHKONSOLE | ODLITEK | 1 |
| 18 | 30.2902-003 | 1 | CEP / LUG / BOLZEN | d 75 | 1 |
| 19 | 30.2902-007 | 0 | KOTOUC ODMEROVANI / MEASURING DISC / MESSSCHEIBE | P 8x190 | 1 |
| 20 | 30.2902-010 | 0 | SEGMENT / SEGMENT / SEGMENT | P 3x108 | 1 |
| 21 | 30.2902-111 | 1 | KRYT / COVER / ABDECKUNG | P 3x74 | 1 |
| 22 | 30.2902-112 | 0 | DRZAK / HOLDER / HALTER | P 2x10 | 2 |
| 23 | 31.0206-005 | 0 | PRUZINA / SPRING / FEDER | 2.50x16x90x27 | 1 |
| 24 | 90.001.25.003 | 0 | SROUB IMBUS / ALLEN HEAD BOLT / IMBUSSCHRAUBE | M4X12 | 2 |
| 25 | 90.001.25.007 (2) | 0 | SROUB IMBUS / ALLEN HEAD BOLT / IMBUSSCHRAUBE | M5X10 | 4 |
| 26 | 90.001.25.033 | 0 | SROUB IMBUS / ALLEN HEAD BOLT / IMBUSSCHRAUBE | 8x25 | 3 |
| 27 | 90.001.25.034 | 0 | SROUB IMBUS / ALLEN HEAD BOLT / IMBUSSCHRAUBE | M8X30 | 6 |
| 28 | 90.001.25.048 | 0 | SROUB IMBUS / ALLEN HEAD BOLT / IMBUSSCHRAUBE | M10X30 | 1 |
| 29 | 90.001.25.055 | 0 | SROUB IMBUS / ALLEN HEAD BOLT / IMBUSSCHRAUBE | M10X70 | 1 |
| 30 | 90.001.25.064 | 0 | SROUB IMBUS / ALLEN HEAD BOLT / IMBUSSCHRAUBE | M12X70 | 4 |
| 31 | 90.001.25.105 | 0 | SROUB IMBUS / ALLEN HEAD BOLT / IMBUSSCHRAUBE | M8X18 | 16 |
| 32 | 90.005.55.050 | 0 | SROUB 6HRANNY / 6 SIDED BOLT / SECHSKANTSCHRAUBE | SROUB M20X50 | 1 |
| 33 | 90.100.55.005 | 0 | MATICE / NUT / MUTTER | MATICE _ M8 | 1 |
| 34 | 90.100.55.006 | 0 | MATICE / NUT / MUTTER | MATICE _ M10 | 1 |

Cislo Sestavy/Number of assembly/Nummer der Baugruppe; Verze (Ver.)/Version/Version; Nazev sestavy/Assembly title/Name der Baugruppe; Pozice (Poz.)/Position/Position; Objednaci cislo/Purchase order number/Bestellnummer; Nazev polozky/Volume title/Name der Position; Rozmer/Stock size/Abmessung

## 7.16. Konzola / Turnable comsol / Drehkonsole

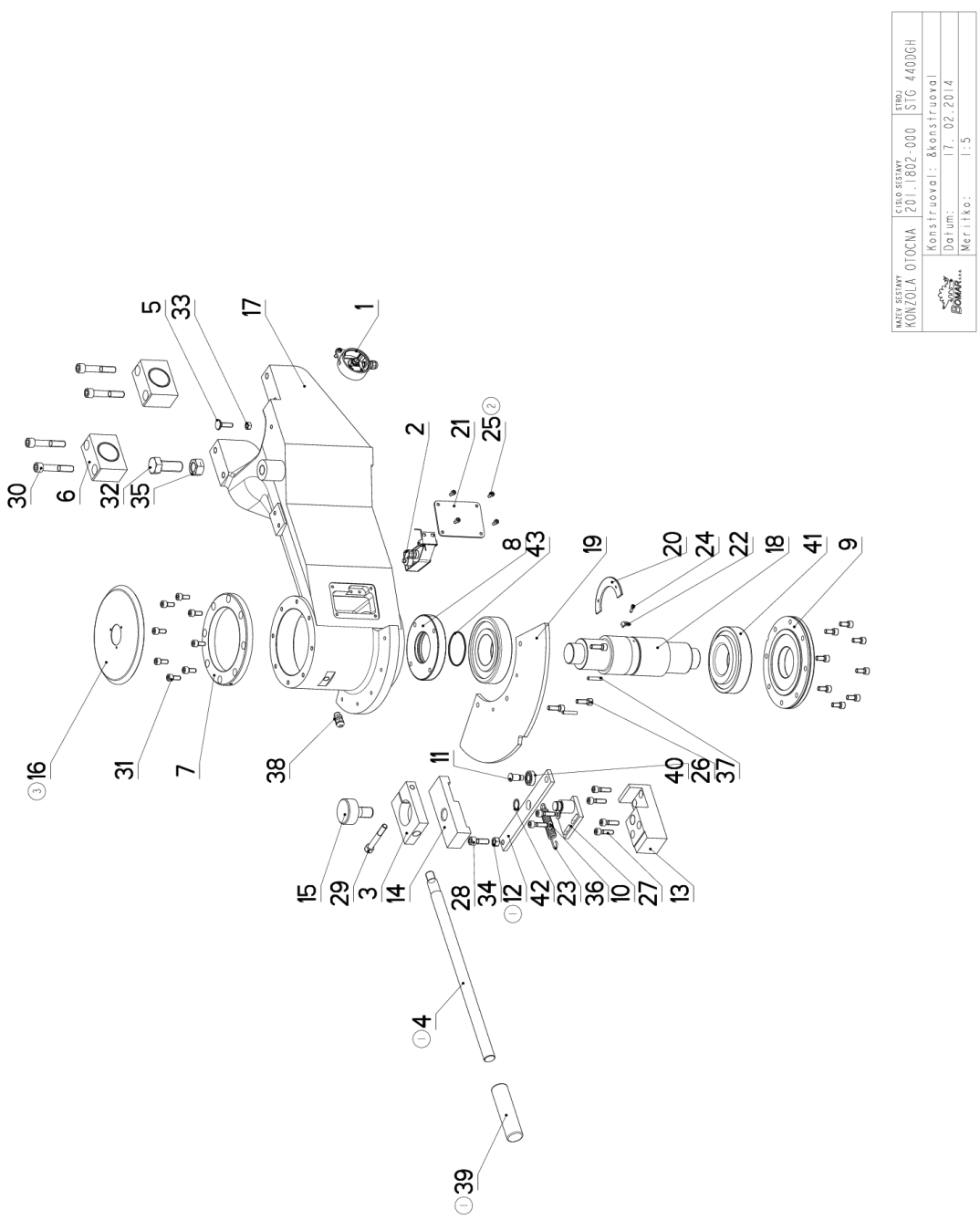

## 7.17. Kusovník / Piece list / Stückliste - Konzola / Turnable comsol / Drehkonsole

| | | | | | |
|---|---|---|---|---|---|
| 35 | 90.100.55.009 | 0 | MATICE / NUT / MUTTER | MATICE _ M20 | 1 |
| 36 | 90.150.50.005 | 0 | PODLOZKA / WASHER / UNTERLEGSCHEIBE | PODLOZKA 8,4 | 2 |
| 37 | 90.300.02.006 | 0 | KOLIK VALC. KAL. / CYLINDRICAL PIN TEMPERED / ZYLINDERSTIFT GEHARTET | KOLIK 6X32 | 2 |
| 38 | 91.070.010 | 0 | PRUCHODKA / LEADTHROUGH / DURCHFÜHRUNG | M12x1.5 CERNA | 1 |
| 39 | 94.004.302 | 0 | RUKOJET / HANDLE / GRIFF | D22 | 1 |
| 40 | 95.001.005 | 0 | LOZISKO / BEARING / LAGER | 6001 2RS | 1 |
| 41 | 95.300.001 | 0 | LOZISKO KUZELIK / BEARING / LAGER | 30312A | 2 |
| 42 | 95.800.008 | 0 | SEGR HRIDEL. / OUTSIDE SAFETY RING / SICHERUNGSRING AUSSEN | POJISTNY KROUZEK 18 | 1 |
| 43 | 96.001.017 | 0 | O-KROUZEK STATIC / STATIC O RING / O-RING STATISCH | 60X3 | 1 |

1.ZRUSENA SOUCAST 30.0802-009 A NAHRAZENA 30.0802-013,ZRUS.SOUC.30.0702-005 A NAHR.30.0702-007, ZRUS.SOUC.94.002.001 A NAHR.94.004.502. 167/ZM141 2.6.2010 SLEZACKOVA

2.ZRUSEN ZAPUSTNY SROUB M5x6 A NAHR SROUBEM IMBUS M5x10(90.001.25.007).256/ZM252 17.10.2013 SLEZACKOVA

3.PRIDAN KRYT 30.1802-105. 034/ZM030 17.2.2014 SLEZACKOVA

Cislo Sestavy/Number of assembly/Nummer der Baugruppe; Verze (Ver.)/Version/Version; Nazev sestavy/Assembly title/Name der Baugruppe; Pozice (Poz.)/Position/Position; Objednaci cislo/Purchase order number/Bestellnummer; Nazev polozky/Volume title/Name der Position; Rozmer/Stock size/Abmessung

## 7.18. Odměřování / Measuring / Gehrungsmessung

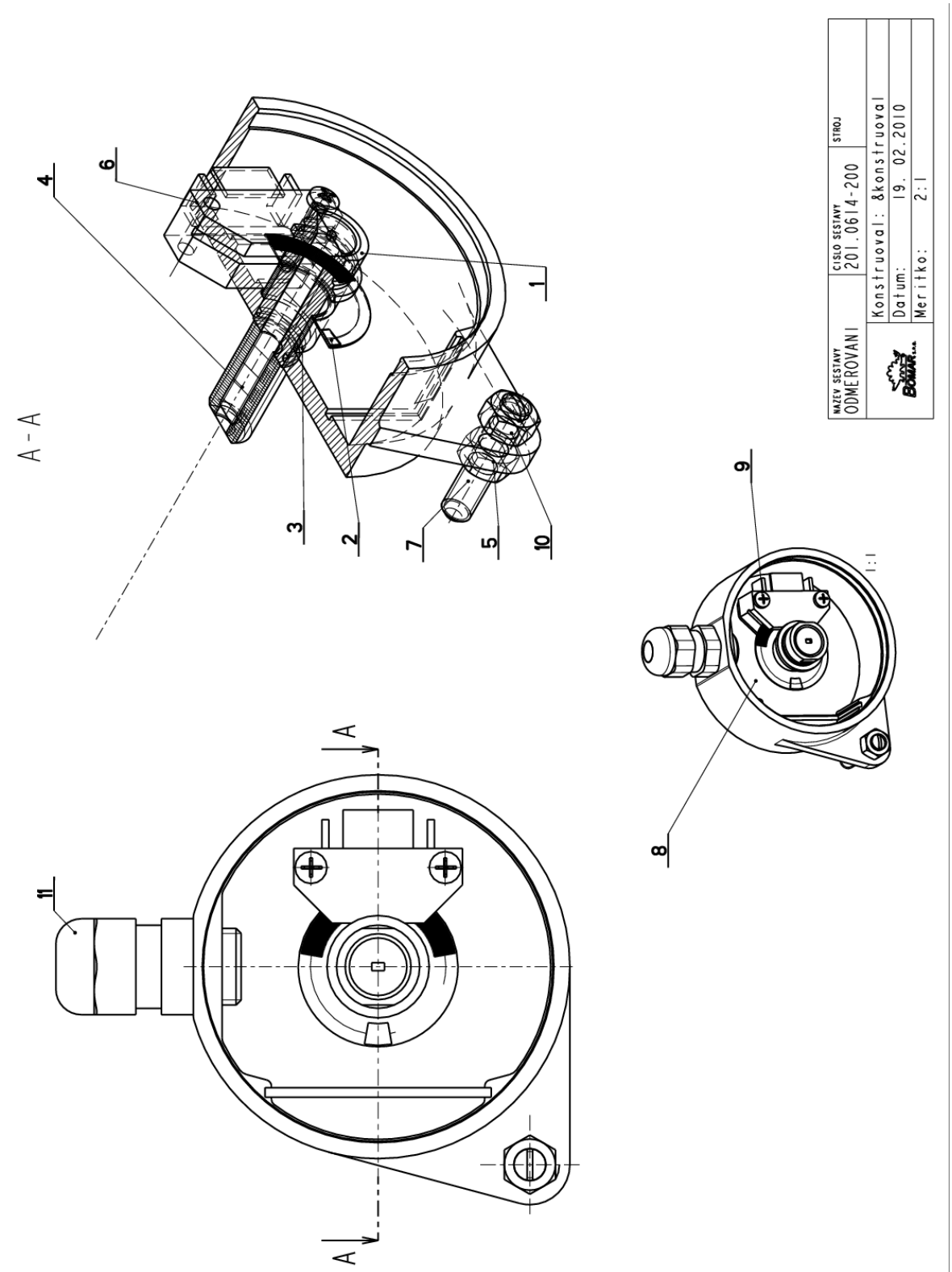

## 7.19. Kusovník / Piece list / Stückliste - Odměřování / Measuring / Gehrungsmessung

| Cislo Sestavy | Ver. | Nazev sestavy |
|---|---|---|
| 201.0614-200 | 0 | ODMEROVANI/MEASURING/GEHRUNGSMESSUNG |

| Poz. | Objednaci cislo | Ver. | Nazev polozky | Rozmer | Ks |
|---|---|---|---|---|---|
| 1 | 30.0614-201 | 0 | CEP / LUG / BOLZEN | d 16 | 1 |
| 2 | 30.0614-203 | 0 | CLONA / CURTAIN / SCHÜRZE | FOLIE 0.3 | 1 |
| 3 | 30.0614-204 | 0 | POUZDRO / SLEEVE / BÜCHSE | TR 13x1 | 1 |
| 4 | 30.0614-208 | 0 | SROUB / BOLT / SCHRAUBE | TYC M10 | 1 |
| 5 | 31.0614-202 | 0 | KRABICE / BOX / DOSE | VYLISEK-PLAST | 1 |
| 6 | 31.0631-201 | 0 | SNIMAC / SENSOR / SENSOR | | 1 |
| 7 | 90.002.20.027 | 0 | SROUB STAVECI / ADJUSTMENT BOLT / STELLSCHRAUBE | SROUB M5X25 | 1 |
| 8 | 90.011.27.019 | 0 | SROUB ZAPUSTNY / COUNTERSINK BOLT / SENKSCHRAUBE | SROUB M5X40 | 1 |
| 9 | 90.014.50.004 | 0 | SROUB / BOLT / SCHRAUBE | M2,5x14 | 2 |
| 10 | 90.100.55.003 | 0 | MATICE / NUT / MUTTER | MATICE _ M5 | 2 |
| 11 | 91.070.010 | 0 | PRUCHODKA / LEADTHROUGH / DURCHFÜHRUNG | M12x1,5 CERNA | 1 |

Cislo Sestavy/Number of assembly/Nummer der Baugruppe; Verze (Ver.)/Version/Version; Nazev sestavy/Assembly title/Name der Baugruppe; Pozice (Poz.)/Position/Position; Objednaci cislo/Purchase order number/Bestellnummer; Nazev polozky/Volume title/Name der Position; Rozmer/Stock size/Abmessung

## 7.20. Snímač / Sensor / Sensor

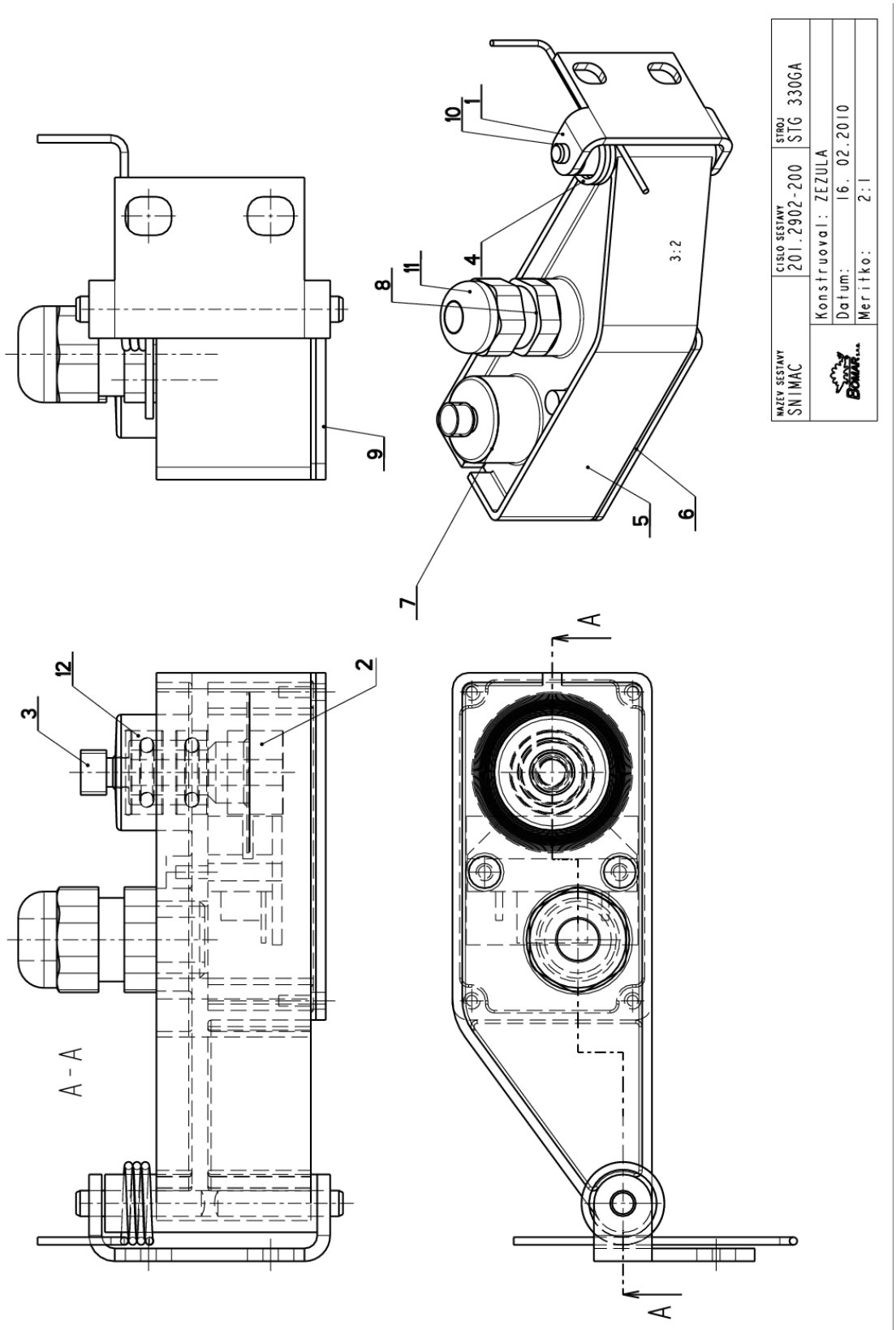

## 7.21. Kusovník / Piece list / Stückliste - Snímač / Sensor / Sensor

| Cislo Sestavy | Ver. | Nazev sestavy |
|---|---|---|
| 201.2902-200 | 0 | SNIMAC/SENSOR/SENSOR |

| Poz. | Objednaci cislo | Ver. | Nazev polozky | Rozmer | Ks |
|---|---|---|---|---|---|
| 1 | 30.2902-205 | 1 | KONZOLA / CONSOLE / KONSOLE | P2 - 25.5 | 1 |
| 2 | 30.2902-209 | 0 | CLONA / CURTAIN / SCHÜRZE | | 1 |
| 3 | 30.2902-212 | 0 | PASTOREK / PINION / RITZEL | d 7 | 1 |
| 4 | 31.2902-113 | 0 | PRUZINA / SPRING / FEDER | d 1.2 | 1 |
| 5 | 31.2902-201 | 0 | RAMENO / SHOULDER / SÄGERAHMEN | VYLISEK-PLAST | 1 |
| 6 | 31.2902-204 | 0 | TESNENI / SEALING / DICHTUNG | TL.1 - 32.3 | 1 |
| 7 | 31.2902-207 | 0 | VIKO / COVER / DECKEL | VYLISEK- PLAST | 1 |
| 8 | 31.2930-001 | 0 | SNIMAC / SENSOR / SENSOR | | 1 |
| 9 | 81.2902-203 | 0 | KRYT / COVER / ABDECKUNG | P 1.5 - 31.8 | 1 |
| 10 | 90.300.0Z.XXX | 0 | KOLIK VALCOVY KALENY / CYLINDRICAL PIN TEMPERED / ZYLINDERSTIFT GEHÄRTET | KOLIK 4X20 | 2 |
| 11 | 91.070.010 | 0 | PRUCHODKA / LEADTHROUGH / DURCHFÜHRUNG | M12x1.5 CERNA | 1 |
| 12 | 95.001.002 | 0 | LOZISKO / BEARING / LAGER | 624 2RS | 2 |

Cislo Sestavy/Number of assembly/Nummer der Baugruppe; Verze (Ver.)/Version/Version; Nazev sestavy/Assembly title/Name der Baugruppe; Pozice (Poz.)/Position/Position; Objednaci cislo/Purchase order number/Bestellnummer; Nazev polozky/Volume title/Name der Position; Rozmer/Stock size/Abmessung

## 7.22. Ovladací panel / Control panel / Bedienpult

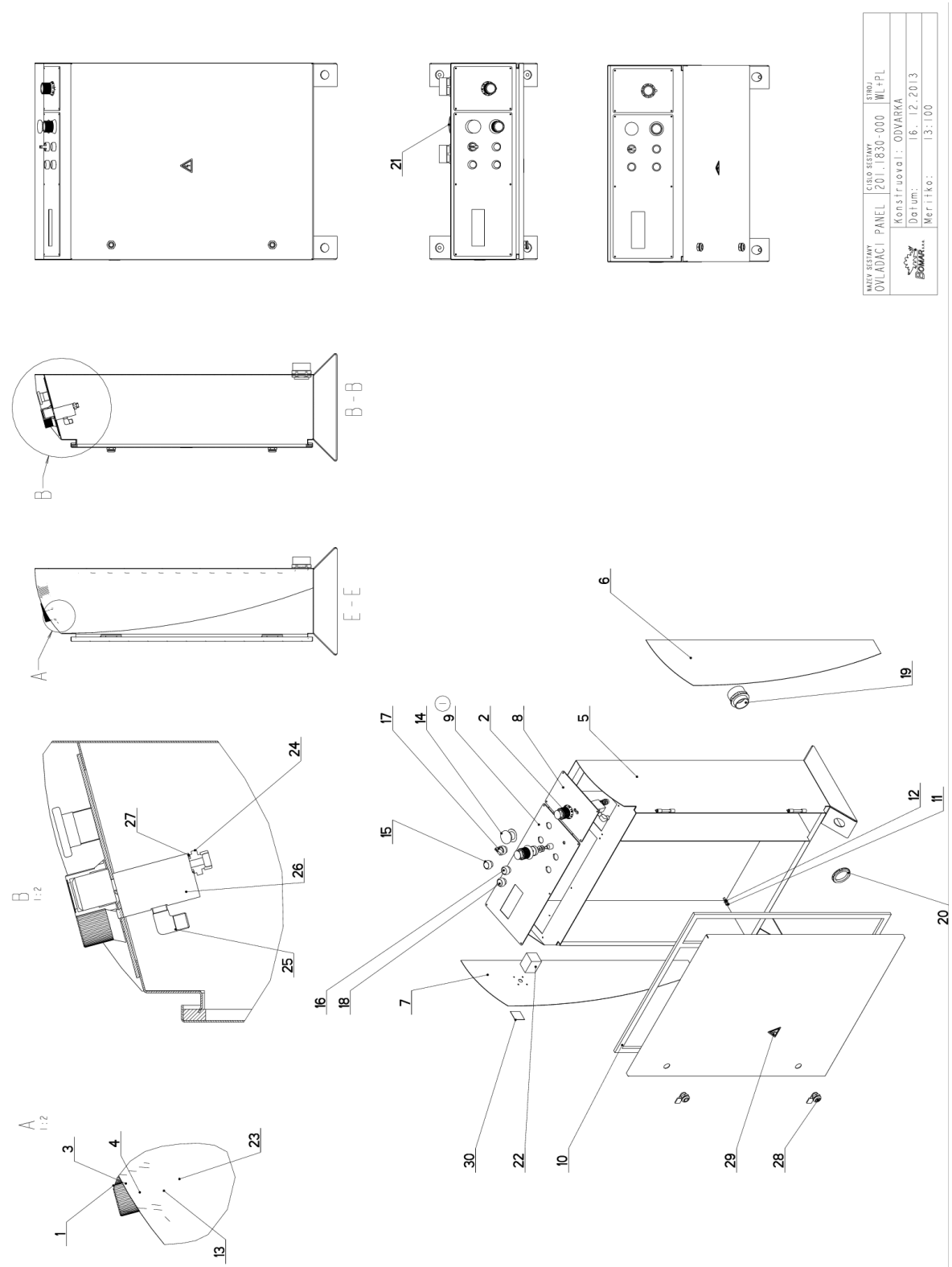

## 7.23. Kusovník / Piece list / Stückliste - Ovladací panel / Control panel / Bedienpult

| Cislo Sestavy | Ver. | Nazev sestavy |
|---|---|---|
| 201.1830-000 | 1 | OVLADACI PANEL/CONTROL PANEL/BEDIENPULT |

| Poz. | Objednaci cislo | Ver. | Nazev polozky | Rozmer | Ks |
|---|---|---|---|---|---|
| 1 | 30.6130-012 | 0 | VIKO / COVER / DECKEL | P 0.5x 30x30 | 2 |
| 2 | 30.6130-018 | 0 | HLAVICE / HEAD / KOPF | VYLISEK | 1 |
| 3 | 31.6130-008 | 0 | HLAVICE / HEAD / KOPF | | 1 |
| 4 | 30.R230-010 | 0 | MEZIKUS / INTERMEDIATE PIECE / PASSSTÜCK | d 32 | 1 |
| 5 | 30.R230-201 | 3 | SKRIN / BOX / KASTEN | | 1 |
| 6 | 30.R230-204 | 0 | PLECH / PLATE / BLECH | P 1x220 | 1 |
| 7 | 30.R230-206 | 1 | PLECH / PLATE / BLECH | P 1x220 | 1 |
| 8 | 30.R230-208 | 1 | DESKA / BOARD / PLATTE | P 3x150 | 1 |
| 9 | 31.R230-207 (1) | 0 | PANEL ELEKTRO / ELECTRO PANEL / PANEL | P 3x205 | 1 |
| 10 | 61.352.001 | 0 | TESNENI / SEALING / DICHTUNG | TESNENI 19x10 | 1 |
| 11 | 90.100.55.004 | 0 | MATICE / NUT / MUTTER | MATICE _ M6 | 4 |
| 12 | 90.150.50.004 | 0 | PODLOZKA / WASHER / UNTERLEGSCHEIBE | PODLOZKA 6,4 | 4 |
| 13 | 90.150.50.006 | 0 | PODLOZKA / WASHER / UNTERLEGSCHEIBE | PODLOZKA 10,5 | 2 |
| 14 | 91.060.030 | 0 | HLAVICE TOTAL STOP / TOTAL STOP HEAD / TASTE TOTAL STOP | | 1 |
| 15 | 91.060.031 | 0 | HLAVICE / HEAD / KOPF | | 1 |
| 16 | 91.060.035 | 0 | HLAVICE / HEAD / KOPF | | 1 |
| 17 | 91.060.051 | 0 | PREPINAC / SWITCH / UMSCHALTER | | 1 |
| 18 | 91.060.053 | 0 | HLAVICE / HEAD / KOPF | | 1 |
| 19 | 91.071.022 | 0 | VYVODKA / BUSHING / TÜLLE | | 2 |
| 20 | 91.072.016 | 0 | MATICE / NUT / MUTTER | | 2 |
| 21 | 91.074.013 | 0 | UCPAVKA / PLUG / STOPFEN | M25x1,5 | 1 |
| 22 | 91.170.003 | 0 | SPINAC VACKOVY / CAM SWITCH / SCHALTER | LE2-12-1763 | 1 |
| 23 | 91.283.015 | 0 | POTENCIOMETR / POTENTIOMETER / POTENTIOMETER | TP 195 4K7/N 20A | 1 |
| 24 | 92.002.103 | 0 | SROUBENI PRIME / DIRECT BOLTING / GERADE VERSCHRAUBUNG | G 1/4" tr12 | 1 |
| 25 | 92.004.001 | 0 | SROUBENI UHLOVE / ANGLE BOLTING / WINKELVERSCHRAUBUNG | 37701 | 1 |
| 26 | 92.152.004 | 0 | VENTIL SKRTICI / CHOKE VALVE / DROSSELVENTIL | VS01-04/R 2.5-O | 1 |
| 27 | 96.082.002 | 0 | TESNENI / SEAL RING / DICHTUNGSRING | 13/17x1.5 CU | 1 |
| 28 | 99.104.002 | 0 | ZAMEK / LOCK / SCHLOSS | ZAMEK CINSKY | 2 |
| 29 | 99.900.045 | 0 | SAMOLEPKA / STICKER / AUFKLEBER | | 1 |
| 30 | 99.900.046 | 0 | SAMOLEPKA / STICKER / AUFKLEBER | | 1 |

1.ZRUS.SOUCASTI 30.R230-207 A 31.R330-003 A NAHR.31.R230-207. 007/ZM021 4.2.2014 SLEZACKOVA

Cislo Sestavy/Number of assembly/Nummer der Baugruppe; Verze (Ver.)/Version/Version; Nazev sestavy/Assembly title/Name der Baugruppe; Pozice (Poz.)/Position/Position; Objednaci cislo/Purchase order number/Bestellnummer; Nazev polozky/Volume title/Name der Position; Rozmer/Stock size/Abmessung

## 7.24. Rameno / Shoulder / Sägerahmen

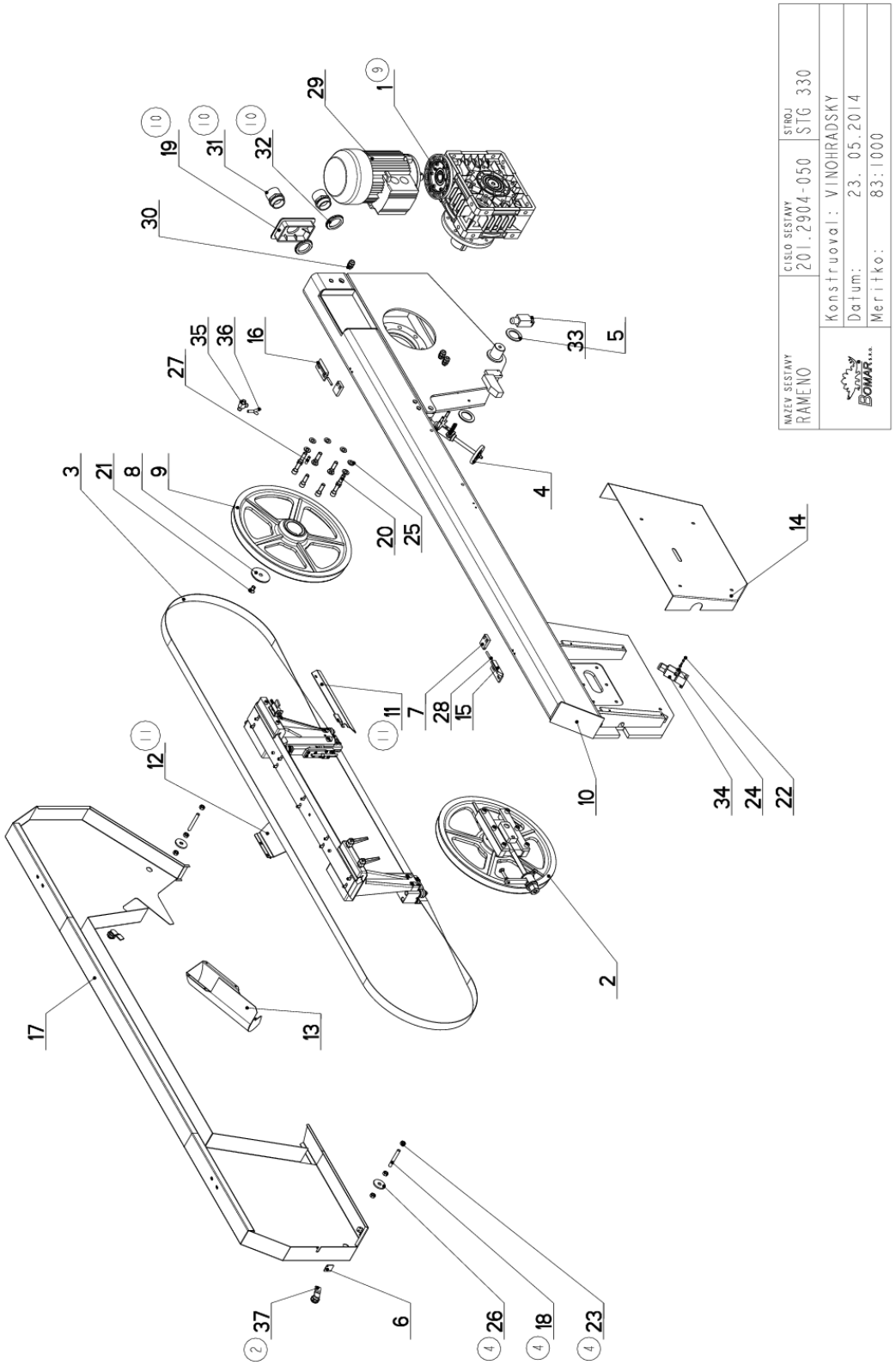

## 7.25. Kusovník / Piece list / Stückliste - Rameno / Shoulder / Sägerahmen

| Cislo Sestavy | Ver. | Nazev sestavy |
|---|---|---|
| 201.2904-050 | 11 | RAMENO/SHOULDER/SÄGERAHMEN |

| Poz. | Objednaci cislo | Ver. | Nazev polozky | Rozmer | Ks |
|---|---|---|---|---|---|
| 1 | 201.2905-200 (9) | 0 | PREVODOVKA / TRANSMISSION / GETRIEBE | POHON PASU | 1 |
| 2 | 201.2908-000 | 3 | NAPINANI / TENSIONING / SPANNUNG | | 1 |
| 3 | 201.2910-000 | 4 | VEDENI PASU / BELT GUIDE / SÄGEBANDFÜHRUNG | | 1 |
| 4 | 201.4814-710 | 0 | KARTAC / BRUSH / BÜRSTE | | 1 |
| 5 | 30.0804-005 | 0 | KROUZEK / RING / RING | P 3x60 | 2 |
| 6 | 30.0814-113 | 0 | PLECH / PLATE / BLECH | P 2x30 | 1 |
| 7 | 30.1714-103 | 3 | KOSTKA / CUBE / WÜRFEL | HR 30 x 10 | 2 |
| 8 | 30.1804-010 | 0 | PODLOZKA / WASHER / UNTERLEGSCHEIBE | d 70 | 1 |
| 9 | 30.2904-003 | 3 | KOLO HNACI / DRIVE WHEEL / ANTRIEBSRAD | ODLITEK | 1 |
| 10 | 30.2904-051 | 5 | RAMENO / SHOULDER / SÄGERAHMEN | | 1 |
| 11 | 30.2904-056 (11) | 0 | KRYT PASU / BELT COVER / BANDABDECKUNG | P 2x114 | 1 |
| 12 | 30.2904-057 (11) | 0 | KRYT PASU / BELT COVER / BANDABDECKUNG | P 2x105 | 1 |
| 13 | 30.2914-059 | 1 | KRYT KARTACKU / BRUSH COVER / BÜRSTENABDECKUNG | | 1 |
| 14 | 30.2914-204 | 4 | KRYT NAPINANI / TENSIONING COVER / BANDSPANNUNGSABDECKUNG | P 1.5x423 | 1 |
| 15 | 30.2914-206 | 0 | KONZOLA / CONSOLE / KONSOLE | | 1 |
| 16 | 30.2914-210 | 0 | KONZOLA / CONSOLE / KONSOLE | | 1 |
| 17 | 30.8404-053 | 3 | KRYT RAMENE / SHOULDER COVER / RAHMENABDECKUNG | | 1 |
| 18 | 30.8404-056 (4) | 0 | TYC ZAVITOVA / THREADED POLE / GEWINDESTANGE | M10 | 2 |
| 19 | 30.8404-057 (10) | 0 | ZATKA / PLUG / STOPFEN | 150x100x5-8 | 1 |
| 20 | 90.001.25.060 | 0 | SROUB IMBUS / ALLEN HEAD BOLT / IMBUSSCHRAUBE | M12X40 | 8 |
| 21 | 90.011.27.009 | 0 | ZAPUSTNY IMBUS / COUNTERSINK BOLT / SENKSCHRAUBE | SROUB M12X20 | 1 |
| 22 | 90.012.50.007 | 0 | SROUB / ROLLER BOLT / ZYLINDERSCHRAUBE | SROUB M4X30 | 4 |
| 23 | 90.100.55.006 (4) | 0 | MATICE / NUT / MUTTER | MATICE _ M10 | 6 |
| 24 | 90.150.50.002 | 0 | PODLOZKA / WASHER / UNTERLEGSCHEIBE | PODLOZKA 4,3 | 4 |
| 25 | 90.150.50.007 | 0 | PODLOZKA / WASHER / UNTERLEGSCHEIBE | PODLOZKA 13 | 8 |
| 26 | 90.151.50.002 (4) | 0 | PODLOZKA / WASHER / UNTERLEGSCHEIBE | PODLOZKA 12 | 2 |
| 27 | 90.300.02.010 | 0 | KOLIK VALC. KAL. / CYLINDRICAL PIN TEMPERED / ZYLINDERSTIFT GEHARTET | KOLIK 8X32 | 1 |
| 28 | 90.301.02.005 | 0 | KOLIK VALCOVY / CYLINDRICAL PIN SOFT / ZYLINDERSTIFT WEICH | KOLIK 6X36 | 2 |
| 29 | 91.001.053 | 0 | ELEKTROMOTOR / ELECTRIC MOTOR / ELEKTROMOTOR | MDERA 100-32pro | 1 |
| 30 | 91.070.011 | 0 | VYVODKA / BUSHING / TÜLLE | M16x1.5 | 3 |
| 31 | 91.071.005 (10) | 0 | PRUCHODKA / LEADTHROUGH / DURCHFÜHRUNG | | 2 |
| 32 | 91.072.008 (10) | 0 | MATICE / NUT / MUTTER | | 2 |
| 33 | 91.173.007 | 0 | SPINAC KONCOVY / END SWITCH / ENDSCHALTER | | 1 |

Cislo Sestavy/Number of assembly/Nummer der Baugruppe; Verze (Ver.)/Version/Version; Nazev sestavy/Assembly title/Name der Baugruppe; Pozice (Poz.)/Position/Position; Objednaci cislo/Purchase order number/Bestellnummer; Nazev polozky/Volume title/Name der Position; Rozmer/Stock size/Abmessung

## 7.26. Rameno / Shoulder / Sägerahmen

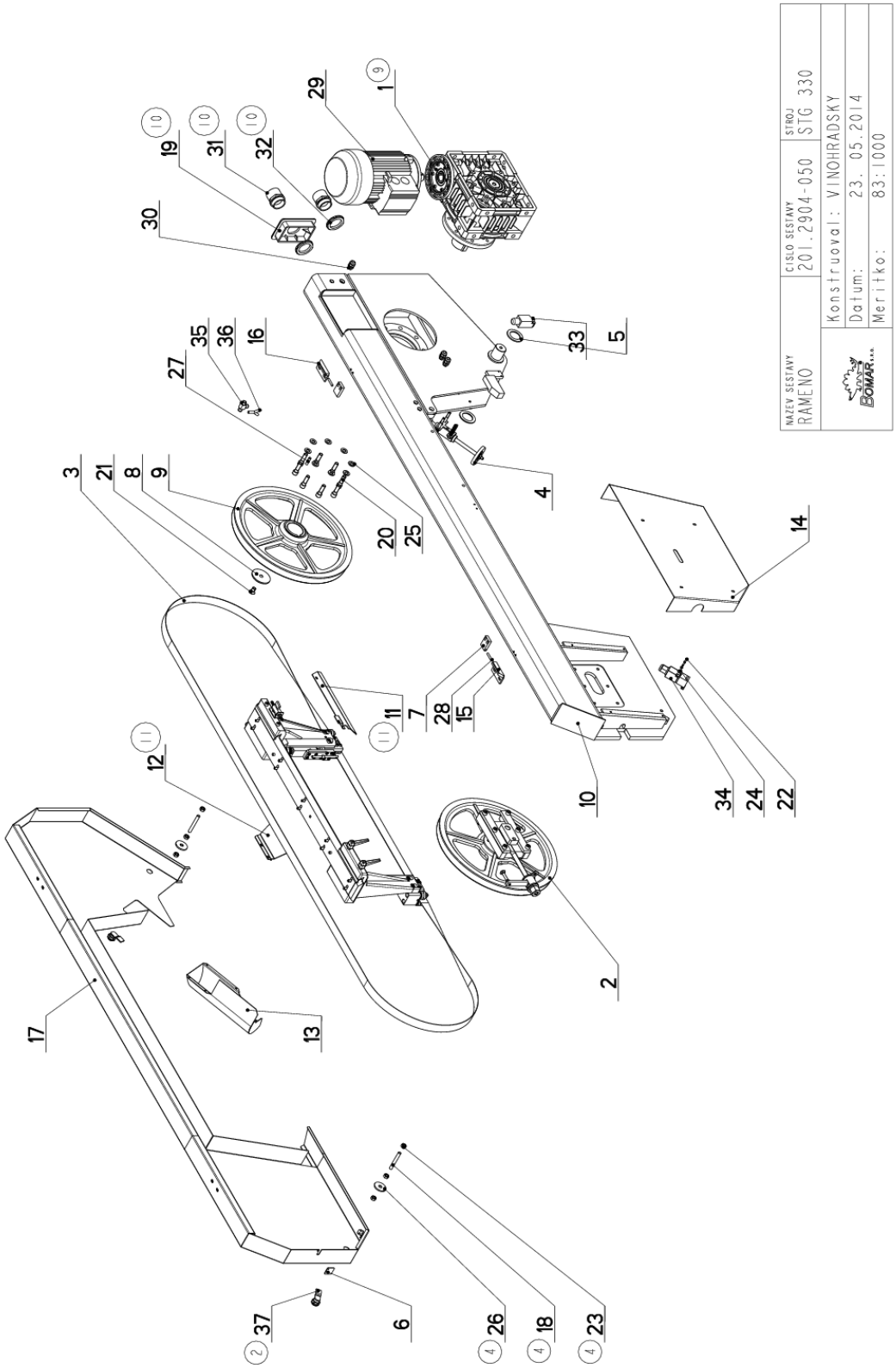

| | | | | | |
|---|---|---|---|---|---|
| 34 | 91.173.012 | 0 | SPINAC KONCOVY / END SWITCH / ENDSCHALTER | | 1 |
| 35 | 92.006.001 | 0 | PROPOJKA T / CONNECTION T / VERBINDUNGSSTÜCK T | 37892 | 1 |
| 36 | 94.201.001 | 0 | HADICE / HOSE / SCHLAUCH | 6 | 1 |
| 37 | 99.104.002 (2) | 0 | ZAMEK / LOCK / SCHLOSS | ZAMEK CINSKY | 2 |

1.Z ks.STROJE ZRUSENA POZICE 30.8404-052 A NAHRAZENA 30.8404-055. C.ZMENY 365/2007 27.9.2007 VINOHRADSKY

2.PRIDAN ZAMEK CINSKY 99.104.002,2xDRZAK 30.8407-099,ZRUSEN PANT KUFROVY 30.1814-110,PANT KUFROVY 99.100.002. 02/ZM093 31.3.2008 PAVLIKOVA

3.ZRUSEN DRZAK 30.8407-099 A NAHRAZEN DRZAKEM 30.8407-091. 175/ZM261 29.7.2008 SLEZACKOVA

4.ZRUS.DRZAK 30.8407-091,PRID.2xTYC ZAVITOVA 30.8404-056,2xPODLOZKA 12 (90.151.002), 6xMATICE M10 (90.100.55.006) 077/ZM106 16.4.2009 SLEZACKOVA

5.ZRUSEN KRYT PASU 30.0814-103 A NAHRAZEN 30.0814-107. 207/ZM220 15.7.2010 SLEZACKOVA

8.ZRUS.ZATKA 94.102.001,ZRUS.KRYT PASU 30.0814-107(NAHR.KRYTEM 30.4014-109 V SESTAVE 201.2900-050). ZM224 23.7.2012 SLEZACKOVA

9.ZRUS.PREVODOVKA 201.2905-050 A NAHR.201.2905-200 . 066/ZM164 15.5.2013 SLEZACKOVA

10.ZRUS.2xKROUZEK 30.0614-001,2xPRUCHODKA 92.009.001,ZRUS.ZATKA 30.8404-055 A NAHR.30.8404-057, ZRUS.VYVODKA PG29(91.071.004) A NAHR.VYVODKOU PG36(91.071.005),ZRUS.MATICE PG29(91.072.007) A NAHR.MATICI PG36(91.072.008). 264/ZM275 19.11.2013 SLEZACKOVA

11.PRIDAN KRYT PASU 30.2904-056,30.2904-057. 090/ZM113 23.5.2014 SLEZACKOVA

Cislo Sestavy/Number of assembly/Nummer der Baugruppe; Verze (Ver.)/Version/Version; Nazev sestavy/Assembly title/Name der Baugruppe; Pozice (Poz.)/Position/Position; Objednaci cislo/Purchase order number/Bestellnummer; Nazev polozky/Volume title/Name der Position; Rozmer/Stock size/Abmessung

## 7.28. Převodovka / Transmission / Getriebe

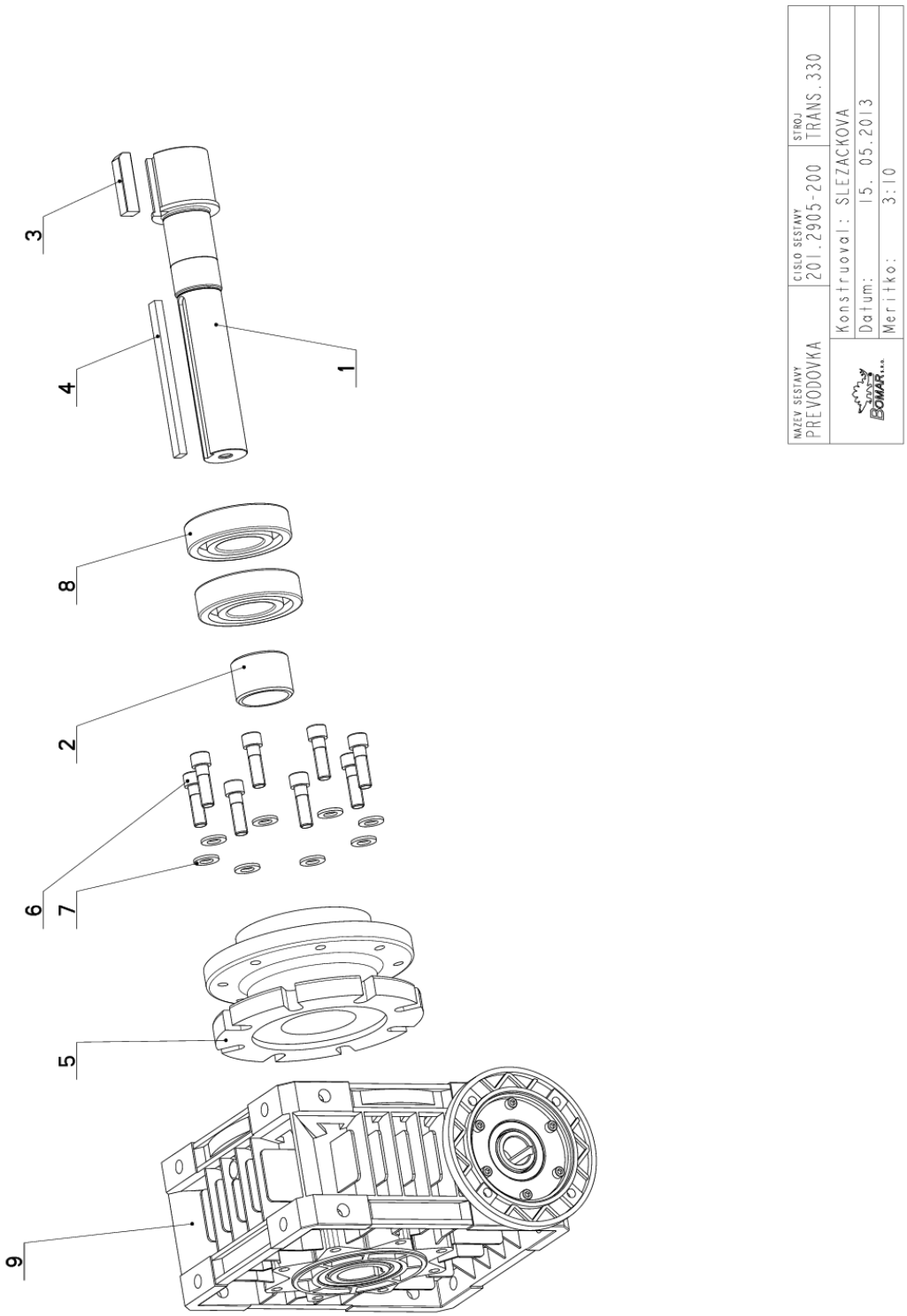

## 7.29. Kusovník / Piece list / Stückliste - Převodovka / Transmission / Getriebe

| Cislo Sestavy | Ver. | Nazev sestavy |
|---|---|---|
| 201.2905-200 | 0 | PREVODOVKA/TRANSMISSION /GETRIEBE |

| Poz. | Objednaci cislo | Ver. | Nazev polozky | Rozmer | Ks |
|---|---|---|---|---|---|
| 1 | 30.2904-004 | 2 | HRIDEL / SHAFT / WELLE | d 65 | 1 |
| 2 | 30.2904-005 | 0 | DISTANC / DISTANCE / DISTANZ | TR 55x8 | 1 |
| 3 | 30.2904-006 | 0 | PERO / SPRING / FEDER | HR 14x14 | 1 |
| 4 | 30.2904-008 | 0 | PERO / SPRING / FEDER | HR 12x8 | 1 |
| 5 | 30.M405-052 | 0 | PRIRUBA / FLANGE / FLANSCHE | ODLITEK | 1 |
| 6 | 90.001.25.060 | 0 | SROUB IMBUS / ALLEN HEAD BOLT / IMBUSSCHRAUBE | M12X40 | 8 |
| 7 | 90.150.50.007 | 0 | PODLOZKA / WASHER / UNTERLEGSCHEIBE | PODLOZKA 13 | 8 |
| 8 | 95.001.027 | 0 | LOZISKO / BEARING / LAGER | 6309 2RS | 2 |
| 9 | 99.002.040 | 0 | PREVODOVKA SNEKOVA / WORM GEAR TRANSMISSION / SCHNECKENGETRIEBE | MU110 P100 B14 | 1 |

Cislo Sestavy/Number of assembly/Nummer der Baugruppe; Verze (Ver.)/Version/Version; Nazev sestavy/Assembly title/Name der Baugruppe; Pozice (Poz.)/Position/Position;
Objednaci cislo/Purchase order number/Bestellnummer; Nazev polozky/Volume title/Name der Position; Rozmer/Stock size/Abmessung

## 7.30. Napínámí / Tensioning / Spannung

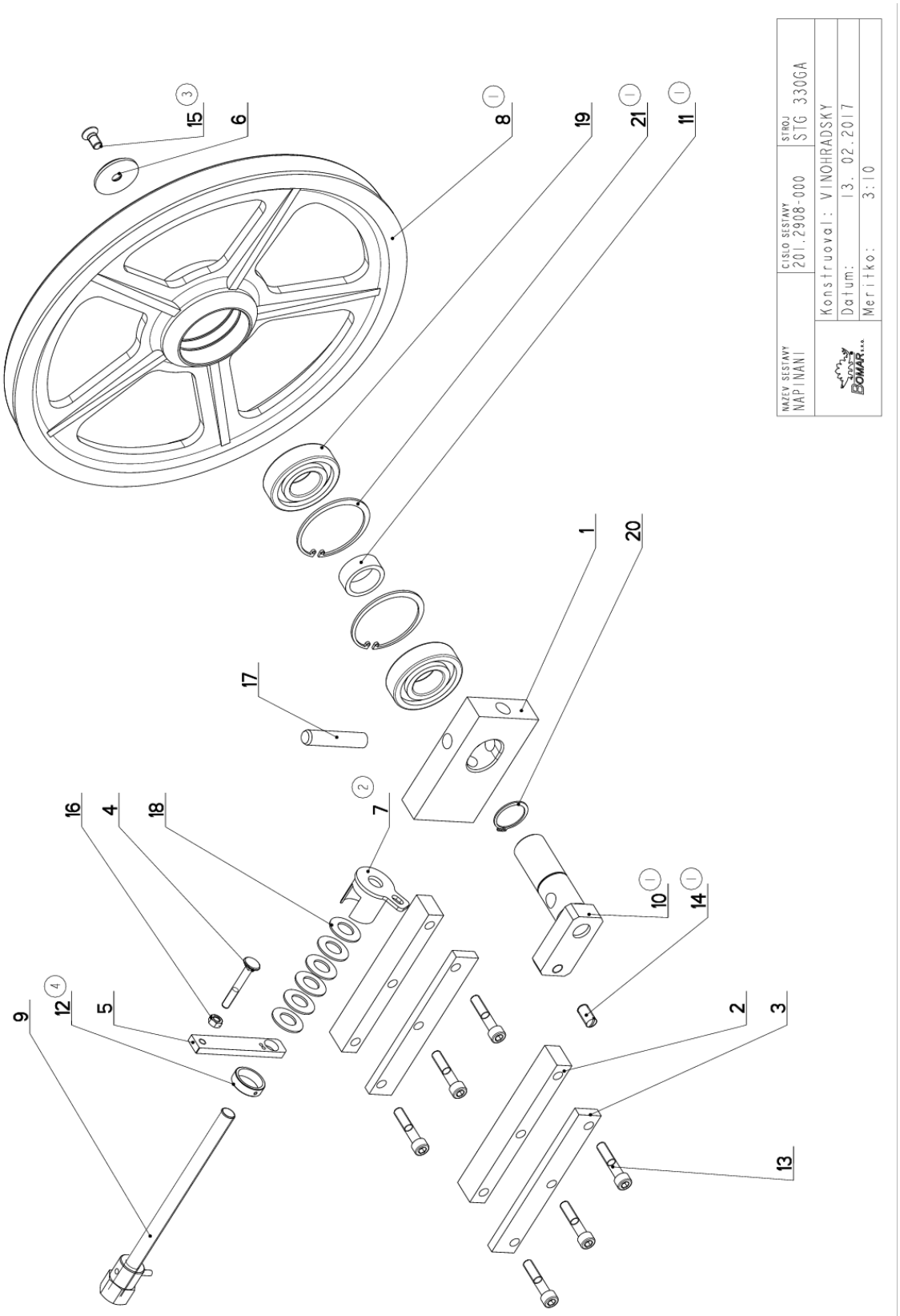

| Cislo Sestavy | Ver. | Nazev sestavy |
|---|---|---|
| 201.2908-000 | 4 | NAPINANI/TENSIONING/SPANNUNG |

| Poz. | Objednaci cislo | Ver. | Nazev polozky | Rozmer | Ks |
|---|---|---|---|---|---|
| 1 | 30.0808-001 | 1 | KOSTKA NAPINANI / TENSIONING CUBE / BANDSPANNUNGSWÜRFEL | 80x30 | 1 |
| 2 | 30.0808-002 | 1 | LISTA VODICI / LEAD TRIM / FÜHRUNGSLEISTE | 30x20 | 2 |
| 3 | 30.0808-006 | 1 | LISTA / TRIM / LEISTE | HR 30x10 | 2 |
| 4 | 30.0808-007 | 0 | SROUB / BOLT / SCHRAUBE | M8x60 | 1 |
| 5 | 30.1708-004 | 4 | DRZAK / HOLDER / HALTER | HR 20x8 | 1 |
| 6 | 30.2908-001 | 1 | PODLOZKA / WASHER / UNTERLEGSCHEIBE | d 50 | 1 |
| 7 | 30.2908-102 (2) | 1 | DRZAK / HOLDER / HALTER | | 1 |
| 8 | 30.2908-103 (1) | 2 | KOLO NAPINACI / TENSIONING WHEEL / UMLENKRAD | ODLITEK | 1 |
| 9 | 30.4008-001 | 2 | SROUB / BOLT / SCHRAUBE | | 1 |
| 10 | 30.4808-101 (1) | 4 | CEP NAPINANI / TENSIONING LUG / SPANNUNGSBOLZEN | | 1 |
| 11 | 30.4808-103 (1) | 1 | KROUZEK DISTANCNI / DISTANCE RING / DISTANZRING | TR 45x5 | 1 |
| 12 | 30.M208-001 (4) | 0 | KROUZEK / RING / RING | TR 35x6 | 1 |
| 13 | 90.001.25.052 | 0 | SROUB IMBUS / ALLEN HEAD BOLT / IMBUSSCHRAUBE | M10X50 | 6 |
| 14 | 90.002.2D.013 (1) | 0 | SROUB STAVECI / ADJUSTMENT BOLT / STELLSCHRAUBE | SROUB M12X25 | 1 |
| 15 | 90.011.27.008 (3) | 0 | ZAPUSTNY IMBUS / COUNTERSINK BOLT / SENKSCHRAUBE | SROUB M10X20 | 1 |
| 16 | 90.100.55.005 | 0 | MATICE / NUT / MUTTER | MATICE _ M8 | 1 |
| 17 | 90.300.0Z.003 (1) | 0 | KOLIK VALC. KAL. / CYLINDRICAL PIN TEMPERED / ZYLINDERSTIFT GEHARTET | KOLIK 16X80 | 1 |
| 18 | 90.350.0Z.002 | 0 | PRUZINA TALIROVA / DISC SPRING / TELLERFEDER | 35,5X18,3X2,0X2,8 | 6 |
| 19 | 95.001.026 | 0 | LOZISKO / BEARING / LAGER | 6307 2RS | 2 |
| 20 | 95.800.014 | 0 | SEGR HRIDEL. / OUTSIDE SAFETY RING / SICHERUNGSRING AUSSEN | POJISTNY KROUZEK 35 | 1 |
| 21 | 95.801.013 (1) | 0 | SEGR DIRA / INSIDE SAFETY RING / SICHERUNGSRING INNEN | POJISTNY KROUZEK 80 | 2 |

1.ZMENA 30.1808-004 NA 30.4808-103, 2908-003 NA 2908-103, 1808-003 NA 4808-101, 90.002.2D.014 NA 90.004.2D.013
90.001.25.056 NA 90.011.27.09, PRIDAN 1KS 95.801.013, 90.301.0Z.019 NA 90.300.0Z.003 14.5.2004 URICAR

2.ZRUSEN KALISEK 30.3508-002A NAHRAZEN 30.2908-102. 076/ZM140 30.4.2008 SLEZACKOVA

3.ZRUS.SROUB M12x20(90.011.27.009) A NAHR.M10x20(90.011.27.008). 110/ZM212 21.6.2012 SLEZACKOVA

4.ZRUSEN KROUZEK 30.3508-004 A NAHR.30.M208-001. 017/ZM050 13.2.2017 SLEZACKOVA

Cislo Sestavy/Number of assembly/Nummer der Baugruppe; Verze (Ver.)/Version/Version; Nazev sestavy/Assembly title/Name der Baugruppe; Pozice (Poz.)/Position/Position; Objednaci cislo/Purchase order number/Bestellnummer; Nazev polozky/Volume title/Name der Position; Rozmer/Stock size/Abmessung

## 7.32. Vedení pásu / Belt guide / Sägebandführung

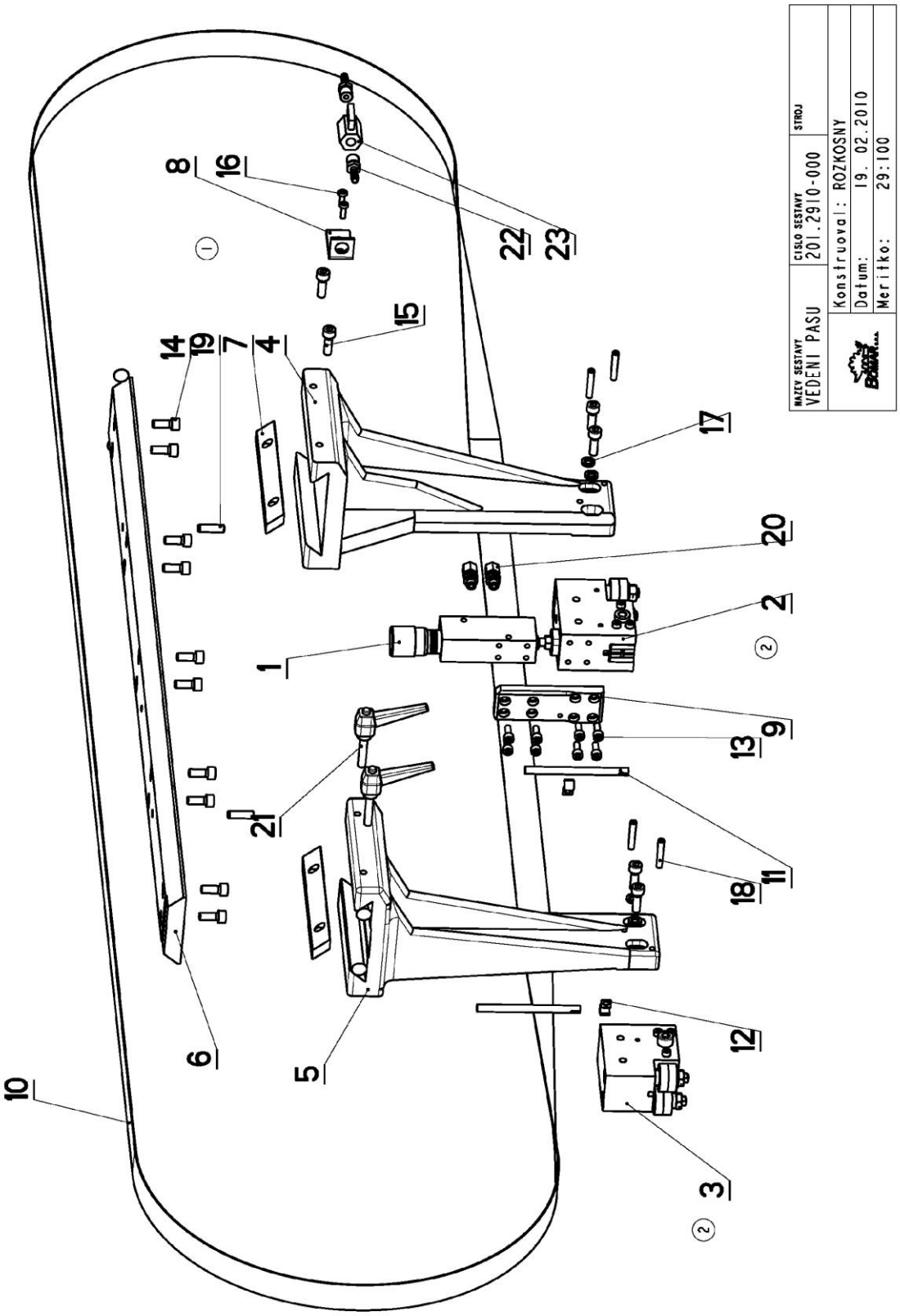

| Cislo Sestavy | Ver. | Nazev sestavy |
|---|---|---|
| 201.2910-000 | 3 | VEDENI PASU/BELT GUIDE/SÄGEBANDFÜHRUNG |

| Poz. | Objednaci cislo | Ver. | Nazev polozky | Rozmer | Ks |
|---|---|---|---|---|---|
| 1 | 201.2016-000 | 0 | REGULACE PRITLAKU / PRESSURE REGULATION / SCHNITTDRUCKREGULATION | | 1 |
| 2 | 201.6910-110 (2) | 1 | KOSTKA VODICI / LEAD CUBE / FÜHRUNGSKLOTZ | | 1 |
| 3 | 201.Y310-300 (2) | 0 | KOSTKA VODICI / LEAD CUBE / FÜHRUNGSKLOTZ | | 1 |
| 4 | 30.0810-003 | 0 | DRZAK / HOLDER / HALTER | | 1 |
| 5 | 30.0810-004 | 1 | DRZAK / HOLDER / HALTER | OOLITEX | 1 |
| 6 | 30.0810-008 | 3 | LISTA / TRIM / LEISTE | HR 90x20 | 1 |
| 7 | 30.0810-011 | 0 | LISTA TRECI / FRICTION TRIM / FRIKTIONSLEISTE | HR 30x10 | 2 |
| 8 | 30.1814-011 | 0 | DRZAK / HOLDER / HALTER | P 3- 76 | 1 |
| 9 | 30.2016-006 | 0 | DESKA / BOARD / PLATTE | HR 40x12 | 1 |
| 10 | 30.2904-913 | 0 | PAS PILOVY 330 / SAW BELT / SÄGEBAND | 4780x32(4)x0.90 | 1 |
| 11 | 30.3510-004 | 0 | TRUBKA / TUBE / ROHR | TR 8x 1 | 2 |
| 12 | 30.9010-003 | 0 | DRZAK / HOLDER / HALTER | P1.5x10 | 2 |
| 13 | 90.001.25.017 | 0 | SROUB IMBUS / ALLEN HEAD BOLT / INBUSSCHRAUBE | M6X16 | 8 |
| 14 | 90.001.25.032 | 0 | SROUB IMBUS / ALLEN HEAD BOLT / INBUSSCHRAUBE | 8x20 | 10 |
| 15 | 90.001.25.033 | 0 | SROUB IMBUS / ALLEN HEAD BOLT / INBUSSCHRAUBE | 8x25 | 6 |
| 16 | 90.013.27.005 | 0 | SROUB PULKULATY / HALF ROUND BOLT / HALBRUNDSCHRAUBE | M5X16 | 2 |
| 17 | 90.163.00.001 | 0 | PODLOZKA / WASHER / UNTERLEGSCHEIBE | NB NORD-LOCK | 4 |
| 18 | 90.302.02.001 | 0 | KOLIK KUZELOVY / TAPER PIN / KEGELBOLZEN | KOLIK 6X36 | 4 |
| 19 | 90.303.02.021 (1) | 0 | KOLIK / PIN / BOLZEN | KOLIK 8X28 | 2 |
| 20 | 92.002.102 | 0 | SROUBENI PRIME / DIRECT BOLTING / GERADE VERSCHRAUBUNG | S-GEV-8LLR | 2 |
| 21 | 94.000.003 | 0 | PAKA UPINACI / ATTACHMENT LEVER / SPANNHEBEL | M8x40 | 2 |
| 22 | 94.202.002 | 0 | REDUKCE / REDUCTION / ADAPTOR / REDUKTION | REDUKCE 6/R1/4" | 2 |
| 23 | 99.260.003 | 0 | VENTIL / VALVE / VENTIL | 1/4" | 1 |

1.VYMENA KOLIKU ZRUS.2xKOLIK VALCOVY 90.302.OZ.002 A NAHR. 2xKOLIK PRUZNY 8x28 90.303.OZ.021. 344/ZM362 24.9.2007 SLEZACKOVA

2.ZRUS.KOSTKA 201.4210-100 A NAHR.KOSTKOU 201.Y310-300,ZRUS.KOSTKA 201.4810-100 A NAHR.KOSTKOU 201.6910-100. 142/ZM185 11.11..2009 SLEZACKOVA

Cislo Sestavy/Number of assembly/Nummer der Baugruppe; Verze (Ver.)/Version/Version; Nazev sestavy/Assembly title/Name der Baugruppe; Pozice (Poz.)/Position/Position; Objednaci cislo/Purchase order number/Bestellnummer; Nazev polozky/Volume title/Name der Position; Rozmer/Stock size/Abmessung

## 7.34. Regulace přítlaku / Pressure regulation / Schnittdruckregulation

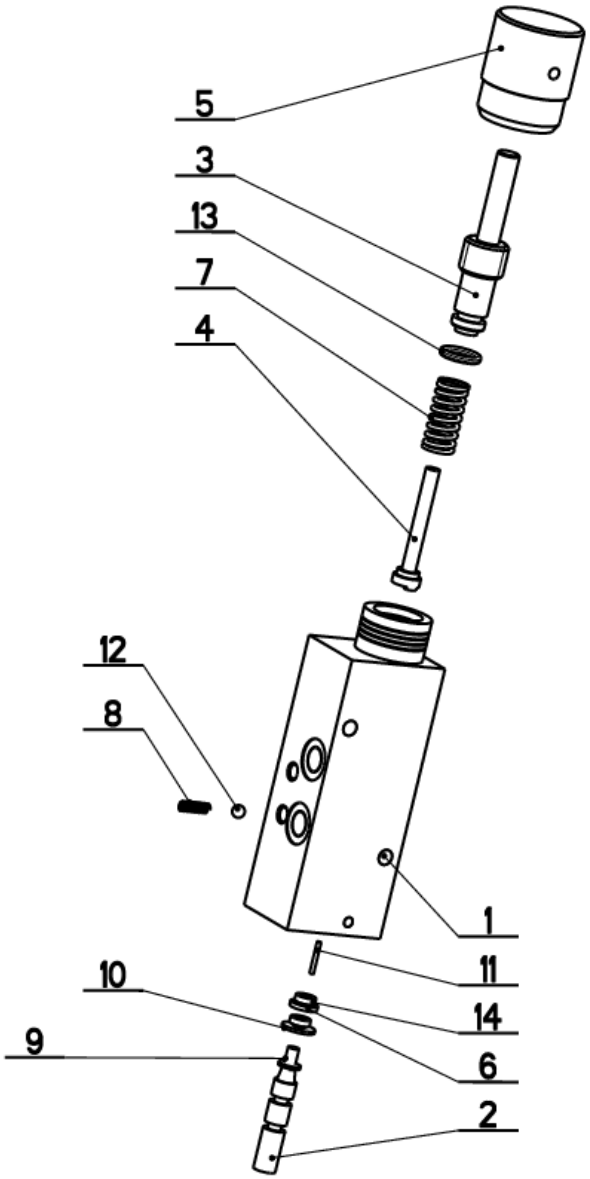


| NAZEV SESTAVY | CISLO SESTAVY | STROJ |
|---|---|---|
| REGULACE PRITLAKU | 001.2016-000 | STG340DGS |
| | Konstruoval: | &konstruoval |
| | Datum: | 19. 02.2010 |
| | Meritko: | 1:2 |

## 7.35. Kusovník / Piece list / Stückliste - Regulace přítlaku / Pressure regulation / Schnittdruckregulation

| Cislo Sestavy | Ver. | Nazev sestavy |
|---|---|---|
| 201.2016-000 | 0 | REGULACE PRITLAKU/PRESSURE REGULATION/SCHNITTDRUCKREGULATION |

| Poz. | Objednaci cislo | Ver. | Nazev polozky | Rozmer | Ks |
|---|---|---|---|---|---|
| 1 | 30.2016-001 | 2 | TELESO / BODY / KÖRPER | HR 40 x 40 | 1 |
| 2 | 30.2016-002 | 0 | JEHLA / NEEDLE / NADEL | KR 8 | 1 |
| 3 | 30.2016-003 | 0 | SROUB / BOLT / SCHRAUBE | d 16 | 1 |
| 4 | 30.2016-004 | 0 | CIDLO / SENSOR / SENSOR | d 10 | 1 |
| 5 | 30.2016-005 | 0 | KOLECKO / WHEEL / ROLLE | d 32 | 1 |
| 6 | 30.2016-009 | 0 | KROUZEK / RING / RING | TR 10x1 | 1 |
| 7 | 31.2016-007 | 0 | PRUZINA / SPRING / FEDER | d 11.6xx1.6 | 1 |
| 8 | 31.2016-008 | 0 | PRUZINA / SPRING / FEDER | 0.25x3,6x12x9.5 | 1 |
| 9 | 90.099.002 | 0 | SROUB PULKULATY / HALF ROUND BOLT / HALBRUNDSCHRAUBE | 4x6 | 1 |
| 10 | 90.151.50.003 | 0 | PODLOZKA / WASHER / UNTERLEGSCHEIBE | PODLOZKA 4 | 1 |
| 11 | 95.690.001 | 0 | JEHLA / NEEDLE / NADEL | 1.5x11.8 | 1 |
| 12 | 95.691.001 | 0 | KULICKA LOZISKA / BALL / KUGEL | RB 4.5 | 1 |
| 13 | 96.001.003 | 0 | KROUZEK O STATICKY / STATIC O RING / O-RING STATISCH | 8X2 | 1 |
| 14 | 96.002.001 | 0 | KROUZEK O DYNAMICKY / DYNAMIC O RING / O-RING DYNAMISCH | 4X2 | 2 |

Cislo Sestavy/Number of assembly/Nummer der Baugruppe; Verze (Ver.)/Version/Version; Nazev sestavy/Assembly title/Name der Baugruppe; Pozice (Poz.)/Position/Position; Objednaci cislo/Purchase order number/Bestellnummer; Nazev polozky/Volume title/Name der Position; Rozmer/Stock size/Abmessung

## 7.36. Kostka vodící / Lead cube / Führungsklotz

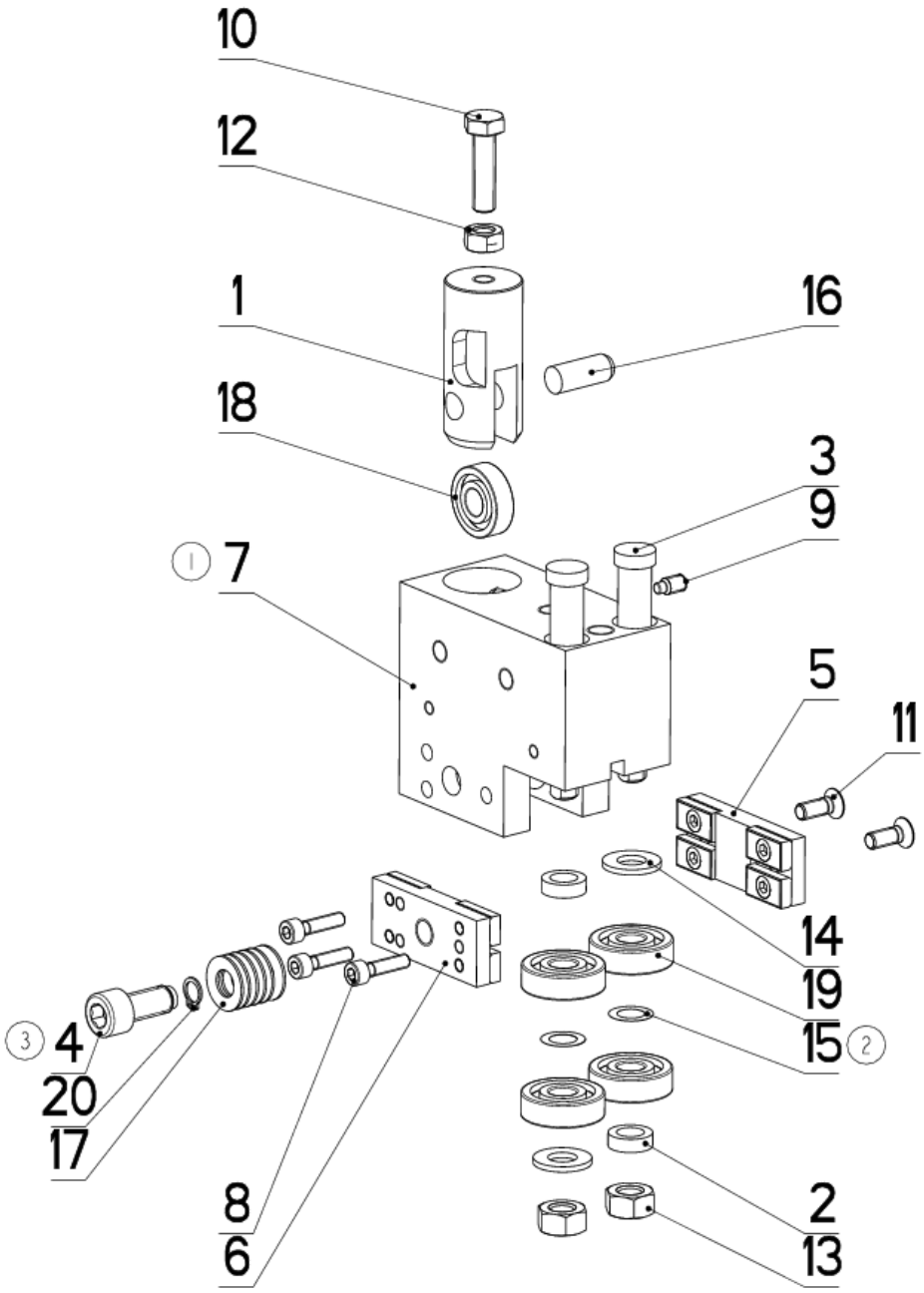


| NAZEV SESTAVY | CISLO SESTAVY | STROJ |
|---|---|---|
| KOSTKA VODICI | 201.6910-110 | IND330GANC |
| BOMAR | Konstruoval: VINOHRADSKY | |
| | Datum: 08. 08.2014 | |
| | Meritko: 1:2 | |

## 7.37. Kusovník / Piece list / Stückliste - Kostka vodící / Lead cube / Führungsklotz

| Cislo Sestavy | Ver. | Nazev sestavy |
|---|---|---|
| 201.6910-110 | 3 | KOSTKA VODICI/LEAD CUBE/FÜHRUNGSKLOTZ |

| Poz. | Objednaci cislo | Ver. | Nazev polozky | Rozmer | Ks |
|---|---|---|---|---|---|
| 1 | 30.1810-102 | 3 | DRZAK / HOLDER / HALTER | TYC 28 | 1 |
| 2 | 30.C210-403 | 1 | DISTANC / DISTANCE / DISTANZ | TR 16x3 | 2 |
| 3 | 30.Y310-212 | 2 | EXCENTR / CAM / EXZENTER | d 15 | 2 |
| 4 | 30.Y310-306 (3) | 0 | SROUB IMBUS / ALLEN HEAD BOLT / IMBUSSCHRAUBE | M10x25 | 1 |
| 5 | 30.Y310-310 | 0 | DRZAK TVRDOKOVU / POA HOLDER / HM-HALTER | | 1 |
| 6 | 30.Y310-320 | 0 | DRZAK TVRDOKOVU / POA HOLDER / HM-HALTER | | 1 |
| 7 | 30.Y310-401 (1) | 3 | KOSTKA VODICI / LEAD CUBE / FÜHRUNGSKLOTZ | HR 80x50 | 1 |
| 8 | 90.001.25.010 | 0 | SROUB IMBUS / ALLEN HEAD BOLT / IMBUSSCHRAUBE | M5X20 | 3 |
| 9 | 90.004.20.002 | 0 | SROUB STAVECI / ADJUSTMENT BOLT / STELLSCHRAUBE | SROUB M6X12 | 1 |
| 10 | 90.005.55.017 | 0 | SROUB 6HRANNY / 6 SIDED BOLT / SECHSKANTSCHRAUBE | SROUB M8X30 | 1 |
| 11 | 90.011.27.017 | 0 | ZAPUSTNY IMBUS / COUNTERSINK BOLT / SENKSCHRAUBE | SROUB M6X16 | 2 |
| 12 | 90.100.55.005 | 0 | MATICE / NUT / MUTTER | MATICE _ M8 | 1 |
| 13 | 90.100.55.006 | 0 | MATICE / NUT / MUTTER | MATICE _ M10 | 2 |
| 14 | 90.150.50.006 | 0 | PODLOZKA / WASHER / UNTERLEGSCHEIBE | PODLOZKA 10,5 | 2 |
| 15 | 90.154.50.001 (2) | 0 | PODLOZKA / WASHER / UNTERLEGSCHEIBE | 10x16x0.1 | 2 |
| 16 | 90.301.02.009 | 0 | KOLIK VALCOVY / CYLINDRICAL PIN SOFT / ZYLINDERSTIFT WEICH | KOLIK 10X26 | 1 |
| 17 | 90.350.02.005 | 0 | PRUZINA TALIROVA / DISC SPRING / TELLERFEDER | 20X10.2X1 | 6 |
| 18 | 95.001.004 | 0 | LOZISKO / BEARING / LAGER | 6000 2RS | 1 |
| 19 | 95.001.014 | 0 | LOZISKO / BEARING / LAGER | 6200 2RS | 4 |
| 20 | 95.800.002 | 0 | SEGR HRIDEL. / OUTSIDE SAFETY RING / SICHERUNGSRING AUSSEN | POJISTNY KROUZEK 8 | 1 |

1.ZRUS.KOSTKA 30.1810-121 A NAHR.KOSTKOU 30.Y310-401. 142/ZM172 11.11.2009 SLEZACKOVA
2.PRIDANA PODLOZKA 90.154.50.001 . 277/ZM294 2.11.2010 SLEZACKOVA
3.ZRUSEN SROUB 30.6910-412 A NAHR.30.Y310-306. ZM150 8.8.2014 SLEZACKOVA

Cislo Sestavy/Number of assembly/Nummer der Baugruppe; Verze (Ver.)/Version/Version; Nazev sestavy/Assembly title/Name der Baugruppe; Pozice (Poz.)/Position/Position;
Objednaci cislo/Purchase order number/Bestellnummer; Nazev polozky/Volume title/Name der Position; Rozmer/Stock size/Abmessung

## 7.38. Kostka vodící / Lead cube / Führungsklotz

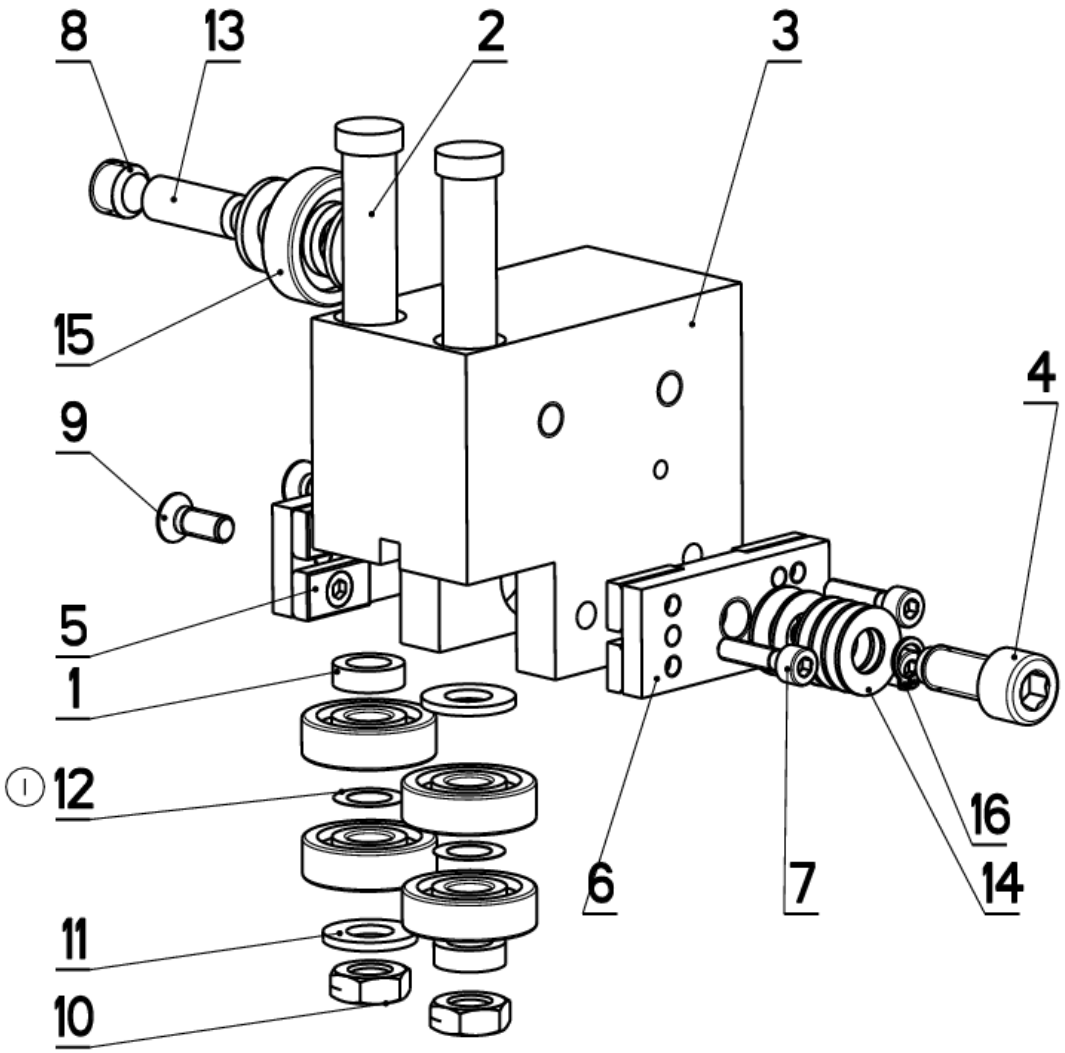


| NAZEV SESTAVY | CISLO SESTAVY | STROJ |
|---|---|---|
| KOSTKA VODICI | 201.Y310-300 | IND360 |
| | Konstruoval: HLADIL | |
| | Datum: 01. 11.2010 | |
| | Meritko: 4:5 | |

## 7.39. Kusovník / Piece list / Stückliste - Kostka vodící / Lead cube / Führungsklotz

| Cislo Sestavy | Ver. | Nazev sestavy |
|---|---|---|
| 201.Y310-300 | 1 | KOSTKA VODICI/LEAD CUBE/FÜHRUNGSKLOTZ |

| Poz. | Objednaci cislo | Ver. | Nazev polozky | Rozmer | Ks |
|---|---|---|---|---|---|
| 1 | 30.C210-403 | 1 | DISTANC / DISTANCE / DISTANZ | TR 16x3 | 2 |
| 2 | 30.Y310-212 | 0 | EXCENTR / CAM / EXZENTER | d 15 | 2 |
| 3 | 30.Y310-301 | 1 | KOSTKA VODICI / LEAD CUBE / FÜHRUNGSKLOTZ | HR 80x50 | 1 |
| 4 | 30.Y310-306 | 0 | SROUB IMBUS / ALLEN HEAD BOLT / IMBUSSCHRAUBE | M10x25 | 1 |
| 5 | 30.Y310-310 | 0 | DRZAK TVRDOKOVU / POA HOLDER / HM-HALTER | | 1 |
| 6 | 30.Y310-320 | 0 | DRZAK TVRDOKOVU / POA HOLDER / HM-HALTER | | 1 |
| 7 | 90.001.25.010 | 0 | SROUB IMBUS / ALLEN HEAD BOLT / IMBUSSCHRAUBE | M5X20 | 3 |
| 8 | 90.002.20.016 | 0 | SROUB STAVECI / ADJUSTMENT BOLT / STELLSCHRAUBE | SROUB M12X10 | 1 |
| 9 | 90.011.27.017 | 0 | SROUB ZAPUSTNY / COUNTERSINK BOLT / SENKSCHRAUBE | SROUB M6X16 | 2 |
| 10 | 90.101.55.002 | 0 | MATICE / NUT / MUTTER | MATICE M10 | 2 |
| 11 | 90.150.50.006 | 0 | PODLOZKA / WASHER / UNTERLEGSCHEIBE | PODLOZKA 10,5 | 4 |
| 12 | 90.154.50.001 (1) | 0 | PODLOZKA / WASHER / UNTERLEGSCHEIBE | 10x16x0.1 | 2 |
| 13 | 90.301.02.001 | 0 | KOLIK VALCOVY / CYLINDRICAL PIN SOFT / ZYLINDERSTIFT WEICH | KOLIK 10X28 | 1 |
| 14 | 90.350.02.005 | 0 | PRUZINA TALIROVA / DISC SPRING / TELLERFEDER | 20X10.2X1 | 6 |
| 15 | 95.001.014 | 0 | LOZISKO / BEARING / LAGER | 6200 2RS | 5 |
| 16 | 95.800.002 | 0 | KROUZEK POJIST.VNEJS / OUTSIDE SAFETY RING / SICHERUNGSRING AUßEN | POJISTNY KROUZEK 8 | 1 |

1.PRIDANA PODLOZKA 90.154.50.001. 277/ZM294 1.11.2010 SLEZACKOVA

## 7.40. Kartáč / Brush / Bürste

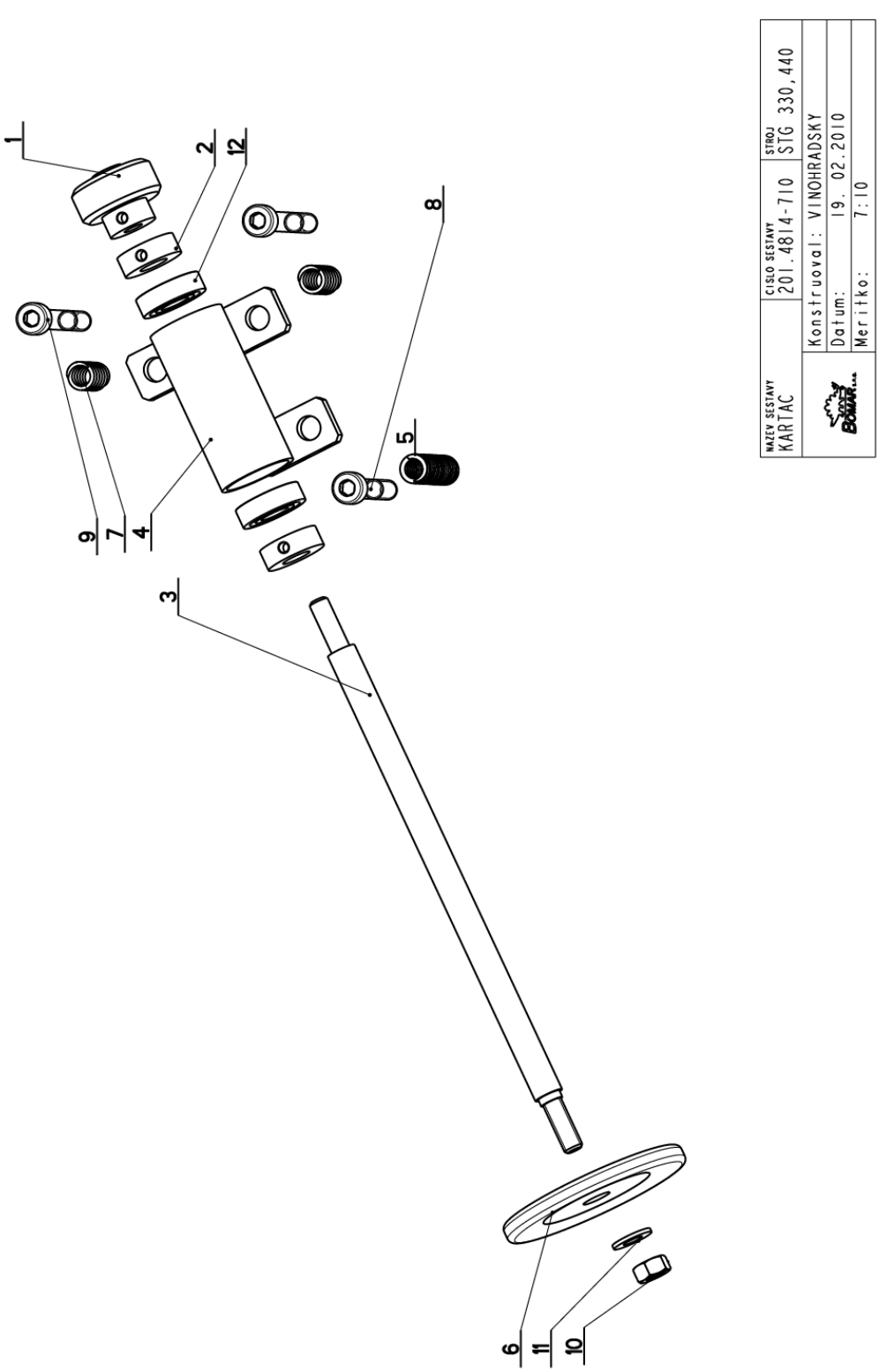

## 7.41. Kusovník / Piece list / Stückliste - Kartáč / Brush / Bürste

| Cislo Sestavy | Ver. | Nazev sestavy |
|---|---|---|
| 201.4814-710 | 0 | KARTAC/BRUSH/BÜRSTE |

| Poz. | Objednaci cislo | Ver. | Nazev polozky | Rozmer | Ks |
|---|---|---|---|---|---|
| 1 | 201.0814-204 | 0 | KOLECKO / WHEEL / ROLLE | SESTAVA | 1 |
| 2 | 30.0814-207 | 0 | KROUZEK / RING / RING | d 25 | 2 |
| 3 | 30.4814-402 | 1 | HRIDEL / SHAFT / WELLE | D 12 | 1 |
| 4 | 30.9214-301 | 2 | DRZAK / HOLDER / HALTER | | 1 |
| 5 | 31.0305-211 | 0 | PRUZINA / SPRING / FEDER | 2x12x50x15,5 | 1 |
| 6 | 31.0814-208 | 0 | KARTAC / BRUSH / BÜRSTE | | 1 |
| 7 | 31.1506-115 | 0 | PRUZINA / SPRING / FEDER | 1.6x12x25x7.5 | 2 |
| 8 | 90.001.25.039 | 0 | SROUB IMBUS / ALLEN HEAD BOLT / IMBUSSCHRAUBE | M8X55 | 1 |
| 9 | 90.001.25.095 | 0 | SROUB IMBUS / ALLEN HEAD BOLT / IMBUSSCHRAUBE | M8X70 | 2 |
| 10 | 90.100.55.005 | 0 | MATICE / NUT / MUTTER | MATICE _ M8 | 1 |
| 11 | 90.150.50.005 | 0 | PODLOZKA / WASHER / UNTERLEGSCHEIBE | PODLOZKA 8,4 | 1 |
| 12 | 95.001.005 | 0 | LOZISKO / BEARING / LAGER | 6001 2RS | 2 |

Cislo Sestavy/Number of assembly/Nummer der Baugruppe; Verze (Ver.)/Version/Version; Nazev sestavy/Assembly title/Name der Baugruppe; Pozice (Poz.)/Position/Position; Objednaci cislo/Purchase order number/Bestellnummer; Nazev polozky/Volume title/Name der Position; Rozmer/Stock size/Abmessung

## 7.42. Kolečko / Wheel / Rolle

Cislo Sestavy
201.0814-204

Ver.
0

Nazev sestavy
KOLECKO/WHEEL/ROLLE

| Poz. | Objednaci cislo | Ver. | Nazev polozky | Rozmer | Ks |
|---|---|---|---|---|---|
| 1 | 30.0814-204.1 | 0 | KOLECKO / / | d 35 | 1 |
| 2 | 30.0814-204.2 | 0 | NABOJ / / | d 20 | 1 |

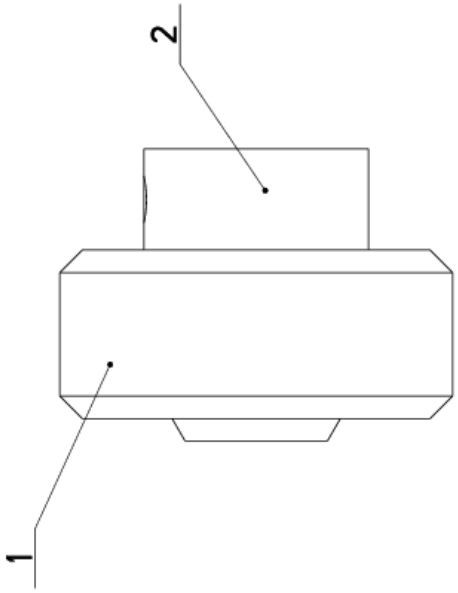


Cislo Sestavy/Number of assembly/Nummer der Baugruppe; Verze (Ver.)/Version/Version; Nazev sestavy/Assembly title/Name der Baugruppe; Pozice (Poz.)/Position/Position;
Objednaci cislo/Purchase order number/Bestellnummer; Nazev polozky/Volume title/Name der Position; Rozmer/Stock size/Abmessung

## 7.43. Válec zvedací / Lifting cylinder / Hebezylinder

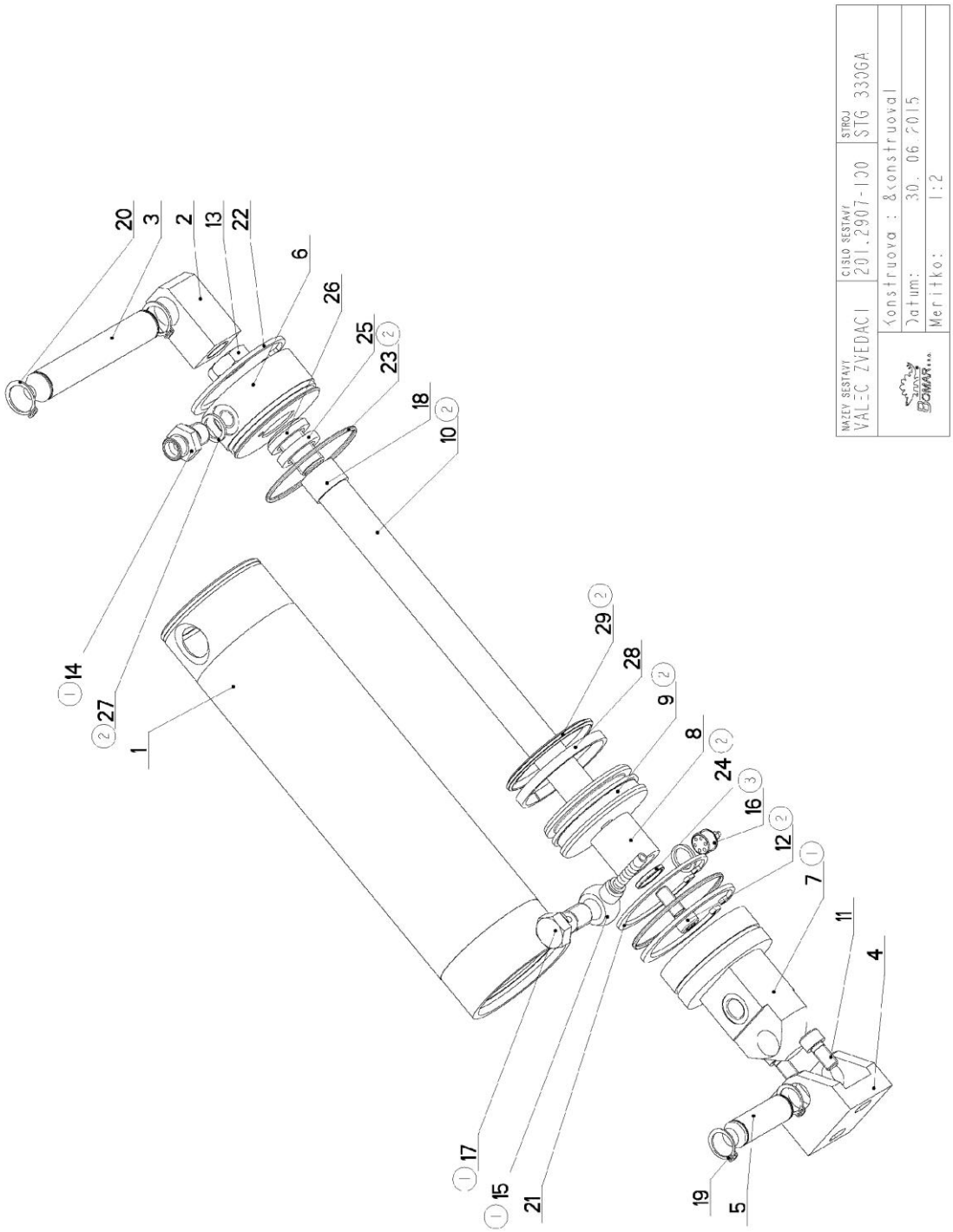

## 7.44. Kusovník / Piece list / Stückliste - Válec zvedací / Lifting cylinder / Hebezylinder

| Cislo Sestavy | Ver. | Nazev sestavy |
|---|---|---|
| 201.2907-100 | 3 | VALEC ZVEDACI/LIFTING CYLINDER/HEBEZYLINDER |

| Poz. | Objednaci cislo | Ver. | Nazev polozky | Rozmer | Ks |
|---|---|---|---|---|---|
| 1 | 30.0607-001 | 5 | VALEC / ROLLER / ZYLINDER | TR 73/ 63H8 | 1 |
| 2 | 30.0807-006 | 2 | DRZAK / HOLDER / HALTER | TYC 25x25 | 1 |
| 3 | 30.0807-007 | 1 | CEP / LUG / BOLZEN | d 18h9 | 1 |
| 4 | 30.0807-008 | 3 | DRZAK / HOLDER / HALTER | HR 40x40 | 1 |
| 5 | 30.0807-009 | 2 | CEP / LUG / BOLZEN | d 16h9 | 1 |
| 6 | 30.1807-001 | 1 | VIKO / COVER / DECKEL | TYC 70 | 1 |
| 7 | 30.1807-008 (1) | 1 | VIKO / COVER / DECKEL | d 65 | 1 |
| 8 | 30.2907-002 | 1 | TRUBKA / TUBE / ROHR | TR 28x4 | 1 |
| 9 | 30.2907-003 (2) | 1 | PIST / PISTON / KOLBEN | D65 | 1 |
| 10 | 30.LW07-001 (2) | 2 | PISTNICE / PISTON ROD / KOLBENSTANGE | d20 | 1 |
| 11 | 90.001.25.031 | 0 | SROUB IMBUS / ALLEN HEAD BOLT / IMBUSSCHRAUBE | 8x16 | 2 |
| 12 | 90.001.25.032 (2) | 0 | SROUB IMBUS / ALLEN HEAD BOLT / IMBUSSCHRAUBE | 8x20 | 1 |
| 13 | 90.101.55.003 | 0 | MATICE / NUT / MUTTER | MATICE M16 | 1 |
| 14 | 92.002.001 (1) | 0 | SROUBENI PRIME / DIRECT BOLTING / GERADE VERSCHRAUBUNG | GES 08LR | 1 |
| 15 | 92.054.001 (1) | 0 | KONCOVKA / END / ENDSTÜCK | KONCOVKA OKO | 1 |
| 16 | 92.151.008 (3) | 0 | VENTIL POJISTNY / SAFETY VALVE / SICHERUNGSVENTIL | VPN-H 1/4" | 1 |
| 17 | 93.010.002 (1) | 0 | SROUB / BOLT / SCHRAUBE | G1/4" | 1 |
| 18 | 95.700.003 | 0 | POUZDRO / SLEEVE / BÜCHSE | 20X15 | 1 |
| 19 | 95.800.007 | 0 | SEGR HRIDEL. / OUTSIDE SAFETY RING / SICHERUNGSRING AUSSEN | POJISTNY KROUZEK 16 | 2 |
| 20 | 95.800.008 | 0 | SEGR HRIDEL. / OUTSIDE SAFETY RING / SICHERUNGSRING AUSSEN | POJISTNY KROUZEK 18 | 2 |
| 21 | 95.801.011 | 0 | SEGR DIRA / INSIDE SAFETY RING / SICHERUNGSRING INNEN | POJISTNY KROUZEK 63 | 1 |
| 22 | 95.801.012 | 0 | SEGR DIRA / INSIDE SAFETY RING / SICHERUNGSRING INNEN | POJISTNY KROUZEK 65 | 2 |
| 23 | 96.001.016 (2) | 0 | O-KROUZEK STATIC / STATIC O RING / O-RING STATISCH | 60X2 | 2 |
| 24 | 96.002.007 (2) | 0 | KROUZEK O DYNAMICKY / DYNAMIC O RING / O-RING DYNAMISCH | 16x2 NBR 70SH | 1 |
| 25 | 96.041.002 | 0 | TESNENI / SEALING / DICHTUNG | 601-20x28x5 | 1 |
| 26 | 96.060.002 | 0 | KROUZEK STIRACI / SCRAPER RING / ABSTREIFRING | KROUZEK STIRACI 20 | 1 |
| 27 | 96.082.002 (2) | 0 | TESNENI / SEAL RING / DICHTUNGSRING | 13/17x1.5 CU | 2 |
| 28 | 96.084.002 | 0 | KROUZEK VODICI / LEAD RING / FÜHRUNGSRING | GP6500630-T47 | 1 |
| 29 | 96.900.016 (2) | 0 | TESNENI KOMBINOVANE / COMBINATION SEALING / KOMBIDICHTUNG | PT0200630 | 1 |

1.ZRUS.VIKO 30.1807-008 A NAHR.30.1807-008,ZRUS.SOUCASTI REDUKCE 30.9107-509,SROUBENI 92.003.001,30.1807-005. PRIDANY SOUCASTI KONCOVKA 92.054.001,SROUB 93.010.002,SROUBENI 92.002.001. 026/ZM020 9.2.2011 SLEZACKOVA

2.ZRUS.PIST 30.0807-004 A NAHR.30.2907-003,ZRUS.PISTNICE 30.0807-003 A NAHR.30.LW07-001,ZRUS.KROUZEK 96.001.004 A NAHR.96.002.007,ZRUS.KROUZEK 96.002.020,ZRUS.MATICE 90.100.55.006,PRID.TESNENI 96.900.016,KROUZEK 96.084.002, SROUB M8x20 90.001.25.032,ZRUS.KROUZEK 96.001.015 A NAHR.96.001.016. 026/ZM057 28.3.2011 SLEZACKOVA

3.VENTIL 92.151.001 PRECISLOVAN 92.151.008. 222/ZM211 29.7.2013 SLEZACKOVA