Serie **Workline**

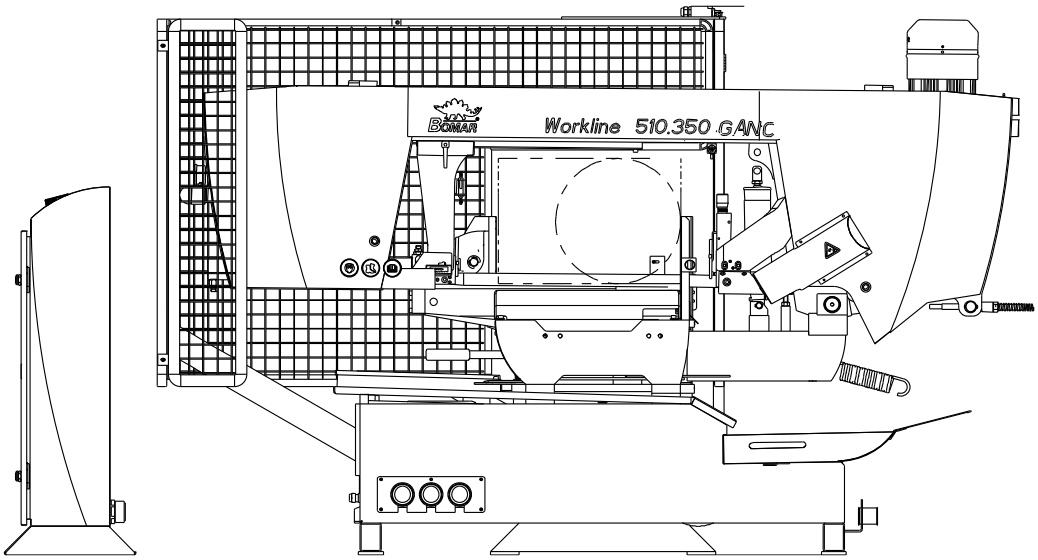

Workline 510.350 GANC

Operating instructions

Before transporting and using the machine,
please read the instructions thoroughly!

Seriové číslo / Serien Nummer / Serial Number _____

Service and information

Your BOMAR dealer:

Direct BOMAR contact:		
BOMAR spol. s r.o. Těžební 1236/1 62700 Brno Czech Republic, EU	telefon: fax: e-mail: www:	+420 – 533 426 100 +420 – 533 426 109 info@bomar.cz http://www.bomar.cz
We are available:		
Mondays to Fridays	7^{00} – 16^{00}	
Version:		
1.05 / Dec 2015 rev. 1		

BOMAR, spol. s r.o. © – Subject to modifications and amendments.

EC Declaration of Conformity

1) We:

BOMAR, spol. s r.o.
Těžební 1236/1
627 00 Brno, Czech Republic
Id. No: 48908827
declare herewith

that the following designated device based on its conception and construction as well as the design launched by us meets the relevant basic safety requirements of the decrees of the government.This statement applies exclusively to the machine device in conditions in which it was brought to the market. It does not apply to parts subsequently added by the end user or to modifications performed subsequently by the end user. In the event of any device modification not approved by us this declaration shall lose its validity

Name:	Band Saw
Type :	Workline 510.350 GANC
Serial number:	
Manufacturer	BOMAR, spol. s r.o., Těžební 1236/1, 627 00 Brno
Product data	
Determination:	for cross dividing and cutting of rolled and towed bars and profiles made of steel, stainless steel, non-ferrous metals and plastics
Description:	Stand, table, cutting unit with the arm, saw band and drive, hand clamping device, cooling system, machine control

Pneumatic *NO* ☒ *YES* ☐ Hydraulic *NO* ☒ YES ☐ Control system *NO* ☐ *YES* ☒

Technical data:	Cutting rate	20-120 m.min-1
	Cutting angle	0° až 60°
	Total dimensions in mm (l×w×h)	2460x2430x1540
	Supply voltage	~3x400 V, 50 Hz
	Total power requirement	5,3 kW
	Weight	950 kg

Documentation:

Technical documentation for this machine device was elaborated in compliance with Government regulation no. 176/2008, Annex 7, part A.

The device meets relevant requirements of the given directives: 2006/42/ES
2004/108/ES

The applied harmonized standards, National standards and technical specifications:

ČSN EN ISO 12100:2011	ČSN EN 13898+A1:2009	ČSN EN ISO 13857:2008
ČSN EN ISO 4413:2011		ČSN EN 60204 -1 ed.2+A1:2009
ČSN EN 55011 ed.3+A1:2011	ČSN EN 61000-6-2 ed.3:2006	ČSN EN 61000-6-4 ed.2+A1:2011

The product is safe on condition of the common and determined usage.

The conformity judging was performed according to §12, par. 3, let. a), of the Law no. 22/1997 Coll. as amended.
The declaration of conformity was carried out in the cooperation with the TÜV SÜD Czech s.r.o, 2) , Novodvorská 994, 142 21 Prague 4 – Czech Republic, Identification number: 63987121 - Inspection body no. 4002.
The inspection certificate no 04.863.175 was issued

Brno, 19. 08. 2015

Point of issue, datum

BOMAR, spol. s r.o.
Těžební 1236/1, 627 00 Brno
Czech Republic
IČO: 48908827
DIČ: CZ48908827

Alfred Pichlmar rector
Name and function of the responsible subject, signature

Person authorized to complete the technical documentation:: BOMAR, spol. s r. o., Těžební 1236/1, 627 00 Brno

1) Name, address and identification number of the subject issuing the conformity declaration (producer of importer)
2) The authorized or accredited body co-operating on the conformity judging

!

If the equipment is installed without safety equipment offered by BOMAR, spol. s ro or its agents and used by the customer (or buyer) then EC declaration loses validity.
EC Declaration of conformity is valid only if customer (buyer) installed the BOMAR safety equipment with the machine or with some other with equivalent safety device in accordance with current applicable regulations and standards.
All machine elements and components that were built into the device by BOMAR, spol. s ro have been declared "identical" to a safety device, as offered by BOMAR, spol. s ro or its agents.

Content

1. SAFETY NOTES 10

1.1. Machine determination 12
1.2. Protective suit and personal safety 12
1.3. Safety notes for machine operator 13
1.4. Safety notes for the servicing and repairs 14
1.5. Safety notes for the servicing and repairs on hydraulic unit 14
1.6. Safety machine accessories 15
1.6.1. Total Stop 15
1.6.2. Protective fencing 16
1.6.3. Arm covers 16
1.6.4. Band saw cover 17
1.6.5. Brush cover 17
1.6.6. Safety guidelines for laser sight line 17
1.7. Safety notes for the cooling 19
1.7.1. Instructions for first help 19
1.8. Umístění štítku stroje / Maschinenschild position / Position of machine label 19
1.9. Umístění bezpečnostních značek / Verteilung der Sicherheitszeichen / Position of safety symbols 20

2. MACHINE DOCUMENTATION 23

2.1. Technická data / Technische Daten / Technical data 25
2.2. Rozměrové schéma / Aufstellzeichnung / Installation diagram 27
2.3. Popis / Beschreibung / Description 28
2.4. Transportation and stocking 29
2.4.1. Conditions for transportation and stocking 29
2.4.2. Transport and stocking preparations 29
2.4.3. Transport and stocking 29
2.5. Transportní schéma / Transport schema / Transport scheme 30
2.6. Activation 31
2.6.1. Machine working conditions 31
2.7. Band saw unpacking and assembling 31
2.7.1. Machine installing and levelling 33
2.7.2. Machine disposal after lifetime 33
2.7.3. First run of the power pack 33
2.7.4. Filling the reservoir with hydraulic oil 35
2.8. Kotevní plan / Verankerungsplan / Grounding plan 36
2.9. Electrical connection 37
2.9.1. Check the direction of the saw band 37
2.9.2. Check machine connection into electrical network 38
2.10. Filling of the cooling system 38
2.11. Check machine function 38
2.12. Saw band 39
2.12.1. Saw band size 39
2.12.2. Selection of the saw band tooth system 39
2.12.3. Saw band running-in 39
2.12.4. Tables for teeth selection 41

3. MACHINE CONTROL 42

3.1. Starting the band saw 44
3.2. Control panel 45
3.3. Machine referring 48
3.4. Machine control in manual mode 48
3.5. Machine control in automatic mode 49
3.5.1. Final cutting of material of short lengths at automatic cycle 53
3.5.2. Cycle breaking – automatic mode 54
3.6. Machine setup 54
3.6.1. SETUP 55
3.6.2. SERVIS (password) 56
3.7. Error messages 57
3.8. Band saw adjusting 58
3.8.1. Cutting speed adjusting 58
3.8.2. Speed adjustment of the arm lowering 58
3.8.3. Angular cut setting 58

3.8.4. Electronic angular cut setting – optional accessories ... 59
3.8.5. Saw frame upper stop position ... 63
3.8.6. Saw frame lower stop position ... 64
3.8.7. Adjusting band guides ... 64
3.8.8. Brush adjustment ... 65
3.9. Material insertion ... 65
3.9.1. Handling agent selection ... 65
3.9.2. Insertion ... 65
3.9.3. Bundle material cutting ... 67

4. MACHINE SERVICE 69

4.1. Saw band dismantling 71
4.2. Saw band instalation 71
4.3. Saw band stretching and inspection 72
4.3.1. Saw band stretching 74
4.3.2. Saw band run adjustment on stretching wheel 74
4.3.3. Saw band run inspection 74
4.3.4. Saw band setting 75
4.3.5. Adjusting of the limit switch of the saw band stretching 75
4.4. Cooling agents and chips disposal 75
4.4.1. Coolant device inspection 76
4.4.2. Chips disposal 77
4.4.3. Gun cleaning machines from chip- optional accessories 77
4.4.4. Halogen light working area -optional accessories 80
4.5. Hydraulic, Greases and oils 80
4.5.1. Gearbox oils 80
4.5.2. Lubricant greases 82
4.5.3. Lubrication 83
4.5.4. Micronizer – mist lubrication 24V- optional accessories 83
4.5.5. Hydraulic oils 86
4.5.6. Regulation of clamping pressure 87
4.5.7. Hydraulic unit service 87
4.6. Machine cleaning 88
4.7. Worn pieces replacement 88
4.7.1. Hard metal guides replacement 88
4.7.2. Round brush replacement 89
4.7.3. Saw band guiding rollers replacement 89
4.7.4. Stretching wheel replacement 91
4.7.5. Driving wheel replacement 93
4.7.6. Replacing the coolant pump 94

5. TROUBLESHOOTING 97

5.1. Mechanical problems 99
5.2. Electric problems 101
5.3. Hydraulic problems 102

6. SCHEMATICS 106

6.1. Elektrické schema / Elektroschema / Electric scheme – 3×400 V, PE+N, 50 Hz 108
6.2. Elektrické schema / Elektroschema / Electric scheme – 3×400 V, PE, 50 Hz 127
6.3. Elektrické schema / Elektroschema / Electric scheme – 3×230 V, PE, 50 Hz 146
6.4. Hydraulické schéma / Hydraulikschema / Hydraulic diagram 165

7. DRAWING ASSEMBLIES FOR SPARE PARTS ORDER 169

7.1. WORKLINE 510.350 Ganc 170
7.2. Kusovník / Piece list / Stückliste - WORKLINE 510.350 Ganc 171
7.3. Odměřování / Measuring / Gehrungsmessung 172
7.4. Kusovník / Piece list / Stückliste - Odměřování / Measuring / Gehrungsmessung 173
7.5. Konzola / Console / Konsole 174
7.6. Kusovník / Piece list / Stückliste - Konzola / Console / Konsole 175
7.7. Rameno / Saw arm / Sägerahmen 176
7.8. Kusovník / Piece list / Stückliste - Rameno / Saw arm / Sägerahmen 177
7.9. Rameno / Saw arm / Sägerahmen 178
7.10. Kusovník / Piece list / Stückliste - Rameno / Saw arm / Sägerahmen 179
7.11. Kartáč / Brush / Bürste 180
7.12. Kusovník / Piece list / Stückliste - Kartáč / Brush / Bürste 181
7.13. Kolečko / Wheel / Rolle 182
7.14. Kryt / Cover / Abdeckung 183
7.15. Převodovka / Transmission / Getriebe 184
7.16. Napínání / Tensioning / Spannung 186
7.17. Kusovník / Piece list / Stückliste - Napínání / Tensioning / Spannung 187
7.18. Vedení pásu / Belt guide / Sägebandführung 188
7.19. Kusovník / Piece list / Stückliste - Vedení pásu / Belt guide / Sägebandführung 189
7.20. Regulace přítlaku / Pressure regulation / Schnittdruckregulation 190
7.21. Kusovník / Piece list / Stückliste - Regulace přítlaku / Pressure regulation / Schnittdruckregulation 191

7.22. Kostka vodící / Lead cube / Führungsklotz 192
7.23. Kusovník / Piece list / Stückliste - Kostka vodící / Lead cube / Führungsklotz 193
7.24. Kostka vodící / Lead cube / Führungsklotz 194
7.25. Kusovník / Piece list / Stückliste - Kostka vodící / Lead cube / Führungsklotz 195
7.26. Válec zvedací / Lifting cylinder / Hebezylinder 196
7.27. Kusovník / Piece list / Stückliste - Válec zvedací / Lifting cylinder / Hebezylinder 197
7.28. Ovladací panel / Control panel / Bedienpult 198
7.29. Kusovník / Piece list / Stückliste - Ovladací panel / Control panel / Bedienpult 199
7.30. Čelo / Head / Stirn 200
7.31. Válec svěráku / Vice cylinder / Schraubstockzylinder 202
7.32. Kusovník / Piece list / Stückliste - Válec svěráku / Vice cylinder / Schraubstockzylinder 203
7.33. Podstavec / Base / Untersatz 204
7.34. Kusovník / Piece list / Stückliste - Podstavec / Base / Untersatz 205
7.35. Podstavec svěráku / Vice base / Schraubstockuntersatz 206
7.36. Kusovník / Piece list / Stückliste - Podstavec svěráku / Vice base / Schraubstockuntersatz 207
7.37. Odměřování / Measuring / Gehrungsmessung 208
7.38. Svěrák / Vice / Schraubstock 210
7.39. Kusovník / Piece list / Stückliste - Svěrák / Vice / Schraubstock 211
7.40. Brzda / Brake / Bremse 212
7.41. Válec svěráku / Vice cylinder / Schraubstockzylinder 214
7.42. Kusovník / Piece list / Stückliste - Válec svěráku / Vice cylinder / Schraubstockzylinder 215
7.43. Skluz / Slide / Rutsch 216
7.44. Podavač / Feeder / Vorschub 218
7.45. Kusovník / Piece list / Stückliste - Podavač / Feeder / Vorschub 219
7.46. Element válečkový / Roller element / Rollenelement 220
7.47. Válec svěráku / Vice cylinder / Schraubstockzylinder 222
7.48. Kusovník / Piece list / Stückliste - Válec svěráku / Vice cylinder / Schraubstockzylinder 223
7.49. Závora optická / Optical gate / Lichtschranke 224
7.50. Plot / Fence / Zaun 226
7.51. Kusovník / Piece list / Stückliste - Plot / Fence / Zaun 227
7.52. Válec pomocný / Auxiliary cylinder / Hilfszylinder 228
7.53. Váleček / Cylinder / Rolle 229

1. Safety notes

The operating instructions must be read by the person, who keeps in touch with the machine before transportation, installation, using, servicing, reparation, stocking or removal!

Attention!
The operating instructions must be available at the machine! Keep the operating instructions in good condition!

The operating instructions include relevant information. The operator must familiarise himself with the install and operation, safety notes and machine servicing, because reliability and service life must be reached. The operating instructions must avoid risks, which are linked to work on the machine. Before transporting and using of the machine, please read the instructions thoroughly!

1.1. Machine determination

The band saw Workline 510.350 GANC is determined for cutting and shortening of rolled bars and drawn bars and profiles from steels, stainless steels, non-ferrous metals and plastics with cutting angle from 0° to 60°.

Combustible materials are excluded for cutting! Any other usage and operation outside this range are unauthorized and the manufacturer/supplier does not accept any responsibility for any damages resulting from such misuse. The operator has full responsibility!

Attention!
Consider the safety signs on the machine. Do not remove or damage them!

The machine is equipped with safety and protective guarding for operator and machine protection. Nevertheless, this safety and protective guarding cannot prevent injury. Service personnel must read this chapter and comprehend it, before he starts to work on the machine. Always keep instructions about work safety! Service personnel must take into account other aspects of the risk, which refer to the ambient conditions and the material.

1.2. Protective suit and personal safety

Wear tight fitting overalls! Loose fitting clothes may be caught with machine parts and cause serious injury.

Wear protective gloves! Material cuts and saw band have sharp edges and may

Attention!
Gloves you can use only at working material replacement (saw band)! The machine and accessories must be inactive! If the machine is running, you must not wear gloves! It is dangerous, because some parts of the machine can catch gloves!

cause serious injuries.

Wear protective shoes with non-skid soles! The unsuitable shoes may cause balance loss and following injury. Falling work pieces may cause serious injuries too.

Wear protective goggles! Chips and cooling liquid may damage your eyes.

Always wear ear protections! Most of the machines emit up to 80 dB and may damage your hearing.

Do not wear jewellery and always tie back long hair! Moving machine parts can catch jewellery or loose hair and may cause serious injuries.

Operate the machine only when you are fit enough to work. Illnesses or injuries diminish concentration. Avoid machine work, which may compromise the safety of you and your colleagues!

Attention!
Machine can be operated by person older than 18 years! Machine can be operated only person physically and mentally fit for this activity

Keep instructions and orders about work safety!
Read the operating instructions, before you start to work on the machine! Keep the operating instructions in good condition!

1.3. Safety notes for machine operator

Machine can be operated only by one person. Machine operator is responsible for presence of other persons by the machine.

Close covers before the machine starting and check, if the covers are not damaged. Damaged covers must be repaired or changed. Do not start the machine, if the cover is removed! Check, if the electric cables are not damaged.

- Do not hold the material for clamping to the vice and for cutting!

Attention!
Do not connect the machine to electricity if the covers are removed. Do not touch the electrical equipment.

- Do not operate with the buttons and the switches on the control panel, when you have gloves!
- For machine starting take care, that there is nobody in the working area of the machine (it means in the working area of the vice, the saw band, the saw arm etc.).
- In no circumstances touch the rotating elements.
- Work on the machine only when the machine is in good condition!
- Check at least once in a shift, if the machine is not damaged. If the machine is damaged, you must bring the machine in order and you must inform your superior!
- Keep your working area clean! Ensure sufficient lighting in the working area.
- Take off the spilt water or the oil from the floor and dry it. Do not touch the cooling liquid with bare hands! Do not set the nozzle of the cooling liquid, when the machine is started on
- Do not remove the chips from the working area of the machine, when the machine is started on!
- Do not use the compressed air for the machine cleaning or for the chips removing!
- Use the protective instruments for chips removal!

Attention!
Only a qualified professional can carry out the servicing and repairs of the electric equipment! Take special care during the work with electrical equipment. High voltage shock can have fatal consequences! Always keep notes about work safety! Otherwise, there is possibility of heavy injury!

1.4. Safety notes for the servicing and repairs

Switch off the main switch and lock it, before you start service work! Otherwise, there is possibility of hazardous machine starting.

Only qualified person can do the servicing and repairs. For parts changing, use only parts, which are identical with the originals. Otherwise, there is possibility of health hazard. Use only recommended type of the hydraulic oils and oils and lubricants!

Do not remove or do not lock the limit switches or safety equipments! Any use of the saw, accessories or machine parts other than that intended by the BOMAR, spol. s r.o. company is not permitted. The guarantee on this product will be afterward lost and BOMAR, spol. s r.o. takes no responsibility for caused damages.

1.5. Safety notes for the servicing and repairs on hydraulic unit

Compliance with the the principles of cleanliness is basic requirement for trouble-free operation of hydraulic equipment. Hydraulic components are products made with high accuracy, and any contamination leads to a reduction lifetime or even malfunction. The consequences are very difficult to remove and expensive.

Always use clean tools. Parts and fasteners, which are part of a hydraulic circuit, never put away the dirty surface. The best cleaning agent is crepe paper, because the fibers of the cleaning cloths can also cause malfunction.

Protective cap from the threaded chamber remove just before the assembly of the unit.

Hoses and pipes before mounting flush with gasoline or other cleaning agent and blow compressed air.

All fittings must be properly tightened. However, do not raw power.

1.6. Safety machine accessories

Enhanced risk!
Do not come into or intervene in the cutting area.
Otherwise, there is possibility of heavy injury.

The machine is equipped with safety accessories. It protects the operator from injuries and the machine before damage. The safety accessories are blocking accessories, emergency switches and covers. Check once in a week the function of the safety accessories. If the safety accessories are functionless, you must stop work and repair or change the safety accessories.

1.6.1. Total Stop

TOTAL STOP button is used for emergency switching – off the machine in case defect or health hazard. By pressing TOTAL STOP button is interrupted the supply of the electrical power.

If any damages or fault appears, immediately press TOTAL STOP button! Release the pressing button is possible by twisting of the upper part of the button.

1.6.2. Protective fencing

Protective fencing is used to prevent personal injury from moving parts.

Doors protective fencing are protected by a limit switch. If the limit switch is open, the machine shuts down ..

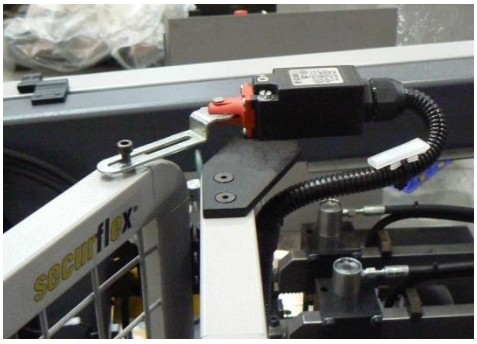

Terms of safety fencing:

0 ˚ - 15 ˚, the automatic cutting cycle, the limit switch is closed, the rear doors are closed fence

15 ˚ - 60 ˚, cutting in manual cycle limit switch is open, the rear doors are open fencing

Když bude obsluha řezat pod úhlem větším jak 15˚, je nutné otevřít zadní dveře oplocení, aby bylo možné dosáhnout požadovaného natočení ramene. Pokud jsou dveře otevřeny, je funkce stroje omezena, svěrák je elektricky blokován a stroj nemůže pracovat v automatickém režimu. Plně funkční je pouze manuální (a nastavovací) režim.

When the operator is cut at an angle greater than 15 ˚, it is necessary to open the back door fence in order to achieve the desired rotation of the arm. If the door is open, the function of the machine is limited, vice power is blocked and the machine can not operate in automatic mode. Fully functional only manual (and setup) mode

1.6.3. Arm covers

If the cover is opened during operation, the limit switch is opened and the band saw is stopped. The band saw is not possible to start in set mode.

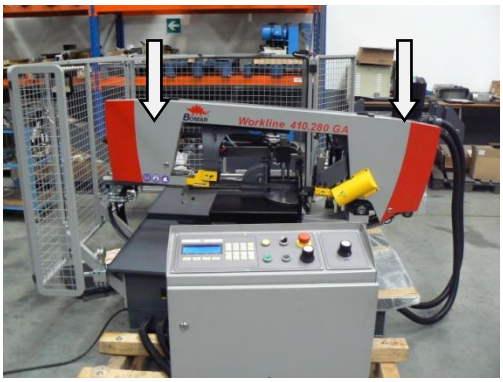

Warning!
The band saw is stated to the operaton, when the covers is closed! Limit switche on saw arm control if covers are open or not.

1.6.4. Band saw cover

It covers the visible area of the saw band from left guiding cube to the frame.

Never switch on the saw band driver if this cover is not mounted!

1.6.5. Brush cover

It covers the brush for saw blade.

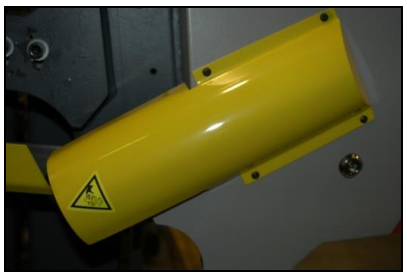

Never switch on the saw band driver if this cover is not mounted!

1.6.6. Safety guidelines for laser sight line

In the vicinity of the feeding vice is situated near the laser, which is used to detect the presence of its material and its correct setup.

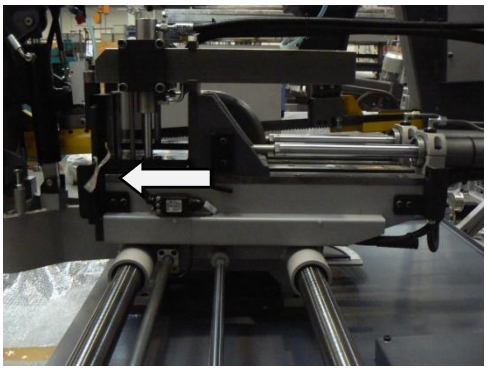

Near from laser bar is a safety sticker

The laser device is used for Class 1M.

Warning!

It is necessary to regularly check the patency of the laser beam on the sensor and after each shift laser cleaned from impurities (clean rag + spirit) due to properly functioning laser. Take care when cleaning the laser was scratched and

Attention!

- *When handling cooling agents always wear hazardous fluid-proof gloves!*
- *Wear protective goggles!*
- *Cooling liquid can get in contact with your eyes and may cause permanent severe injuries*

1.7. Safety notes for the cooling

1.7.1. Instructions for first help

1. Pull off and safely remove polluted, soaked clothing.
2. For breathing, go out in the fresh air or look for first aid treatment.
3. Wash with water or use crèmes for contact with the skin.
4. Flush with water for eyes and look for first aid treatment.
5. For swallowing, drink a lot of water and induce vomiting. Look for medical help.

1.8. Umístění štítku stroje / Maschinenschild position / Position of machine label

The label is placed on the arm of the machine.

1.9. Umístění bezpečnostních značek / Verteilung der Sicherheitszeichen / Position of safety symbols

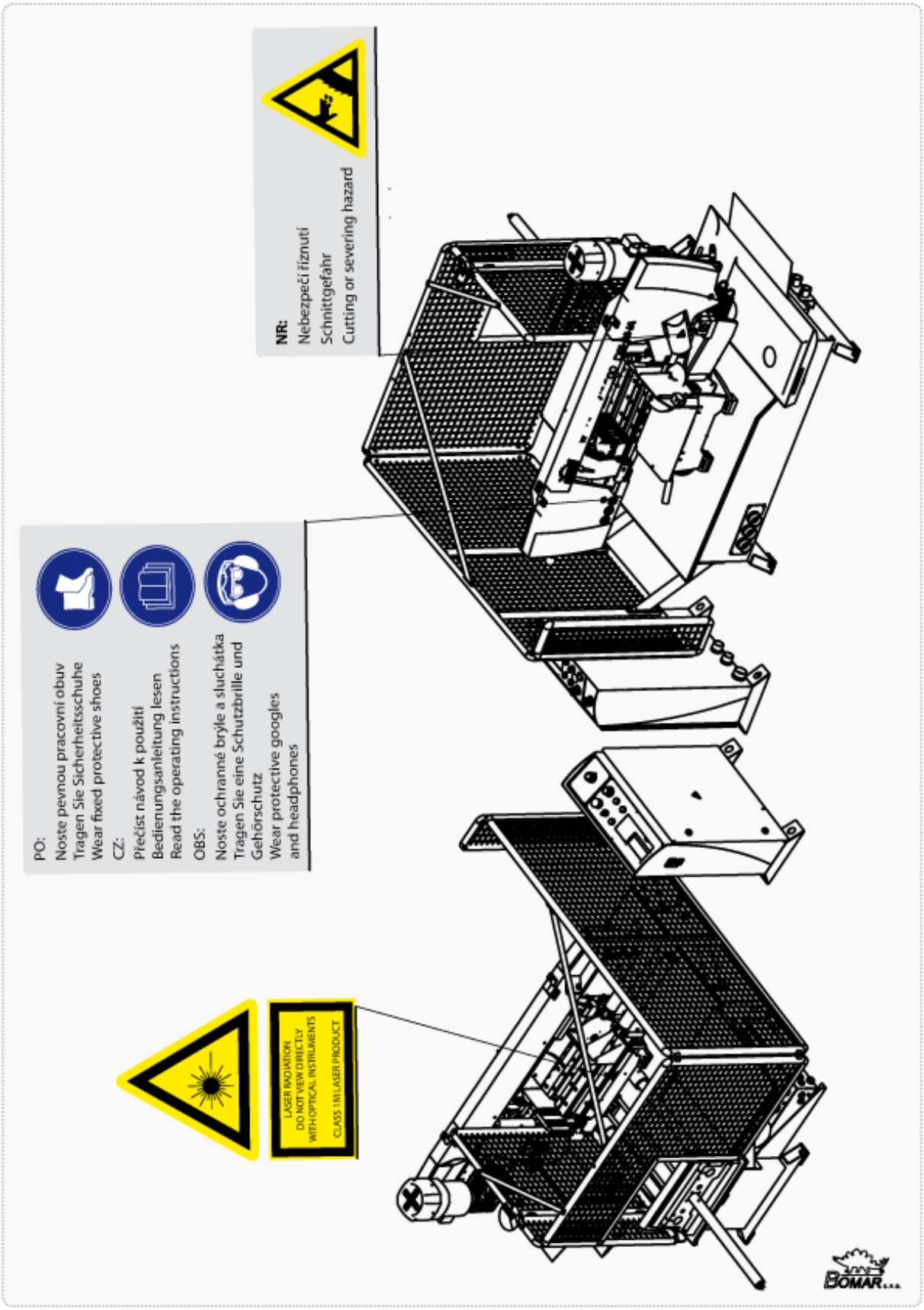
PO:
Noste pevnou pracovní obuv
Tragen Sie Sicherheitsschuhe
Wear fixed protective shoes
CZ:
Přečíst návod k použití
Bedienungsanleitung lesen
Read the operating instructions
OBS:
Noste ochranné brýle a sluchátka
Tragen Sie eine Schutzbrille und
Gehörschutz
Wear protective googles
and headphones
LASER RADIATION
DO NOT VIEW DIRECTLY
WITH OPTICAL INSTRUMENTS
CLASS 1M LASER PRODUCT
NR:
Nebezpečí říznutí
Schnittgefahr
Cutting or severing hazard
BOMAR

2. Machine documentation

2.1. Technická data / Technische Daten / Technical data

Hmotnost stroje / Maschinengewicht / Machine weight:	
• Hmotnost / Gewicht / Weight	950 kg
Rozměry stroje / Maschinengröße / Machine size :	
• Délka / Länge / Lenght	2460 mm
• Šířka / Breite / Width	2430 mm
• Výška / Höhe / Height	1540 mm
Elektrické vybavení / Elektrische Ausrüstung / Electical equipment:	
• Napájení / Versorgungsspannun / Supply voltage	~3 x 400 V, 50Hz, TN-C-S
• Příkon / Gesamptschlusswert / Total Input	5,3 kW
• Max.jištění / Max. Vorschaltsicherung / Max. Fuse	16 A
• Krytí / Schutzart / Protection	IP 54
Akustický tlak / Schalldruckpegel / Acoustic pressure:	
• Workline 510.350 GANC	L_{Aeqv} = 76,3 dB
Pohon / Atrieb / Drive:	
• Typ / Typ / Type	MDERAXX100-320
• Napájení / Versorgungsspannun / Supply voltage	~3 x 400V, 50Hz
• Výkon / Leistung / Output	3 kW
• Jmenovité otáčky / Motornenndrehzahl / Nominal speed	1440 min^{--1}
Hydraulické zařízení / Hydraulikeinrichtung / Hydraulic equipment:	
• Typ / Typ / Type	PPM-AC0,13-PG11/61-1,6-TM20-CB03-FR
• Výkon / Leistung / Output	4 MPa / 1,1 kW
Chladící zařízení / Kühlmiteleinrichtung / Cooling equipment:	
• Typ / Typ / Type	3-COA4-12 HP1
• Obsah nádrže / Volumen vom Kühlmittel / Capacity	40 l
Rozměr pásu / Sägebanddimension / Band size:	
4780×34(32)x1,1mm	
Jeden Zdvih / Vorschublänge Einfachhub / One Upstroak: **Jeden Zdvih –krátky kus /Vorschublänge Einfachhub -/ One Upstroak-short piece**	
600 mm max. 550 mm	
Max. hmotnost podávaného materiálu / Materialmaximalgewicht / Material max. weight:	
2 500 kg	
Řezná rychlost / Schnittgeschwindigkeit / Cutting speed:	
20–120 m/min.	
Řezné rozsahy / Schnittbereiche / Cutting size:	

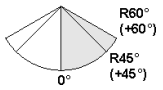			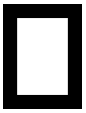	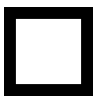
0°	Ø350 mm	510×350 mm	510×350 mm	350×350 mm
45° R	Ø350 mm	400×100 mm	340×350 mm	340×340 mm
60° R	Ø250 mm	260×100 mm	220×350 mm	340×240 mm

Warning:

If the material detection device is installed on the machine then maximal workpiece height is 10 mm shorter

Level of acoustic pressure:

Equivalent level of acoustic pressure A (noise) at operator position are L_{Aeqv}=76,3 dB. Mentioned values are levels of emission which doesn't have to represent safe levels. Factors which influence real level of acoustic pressure on machine operator are: working place characteristics, cut material, saw band. These factors have significantly influence on acoustic pressure.

2.2. Rozměrové schéma / Aufstellzeichnung / Installation diagram

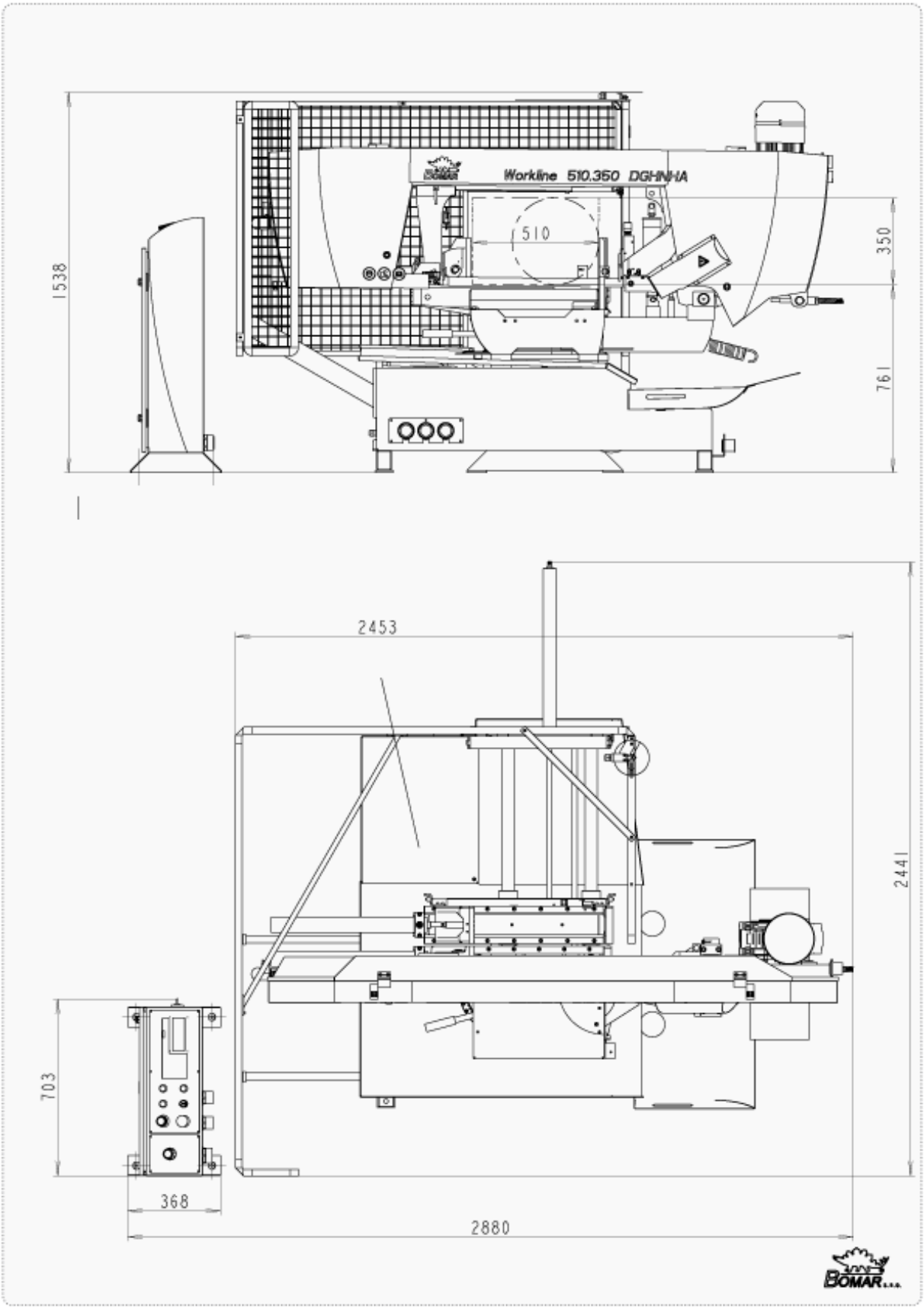

2.3. Popis / Beschreibung / Description

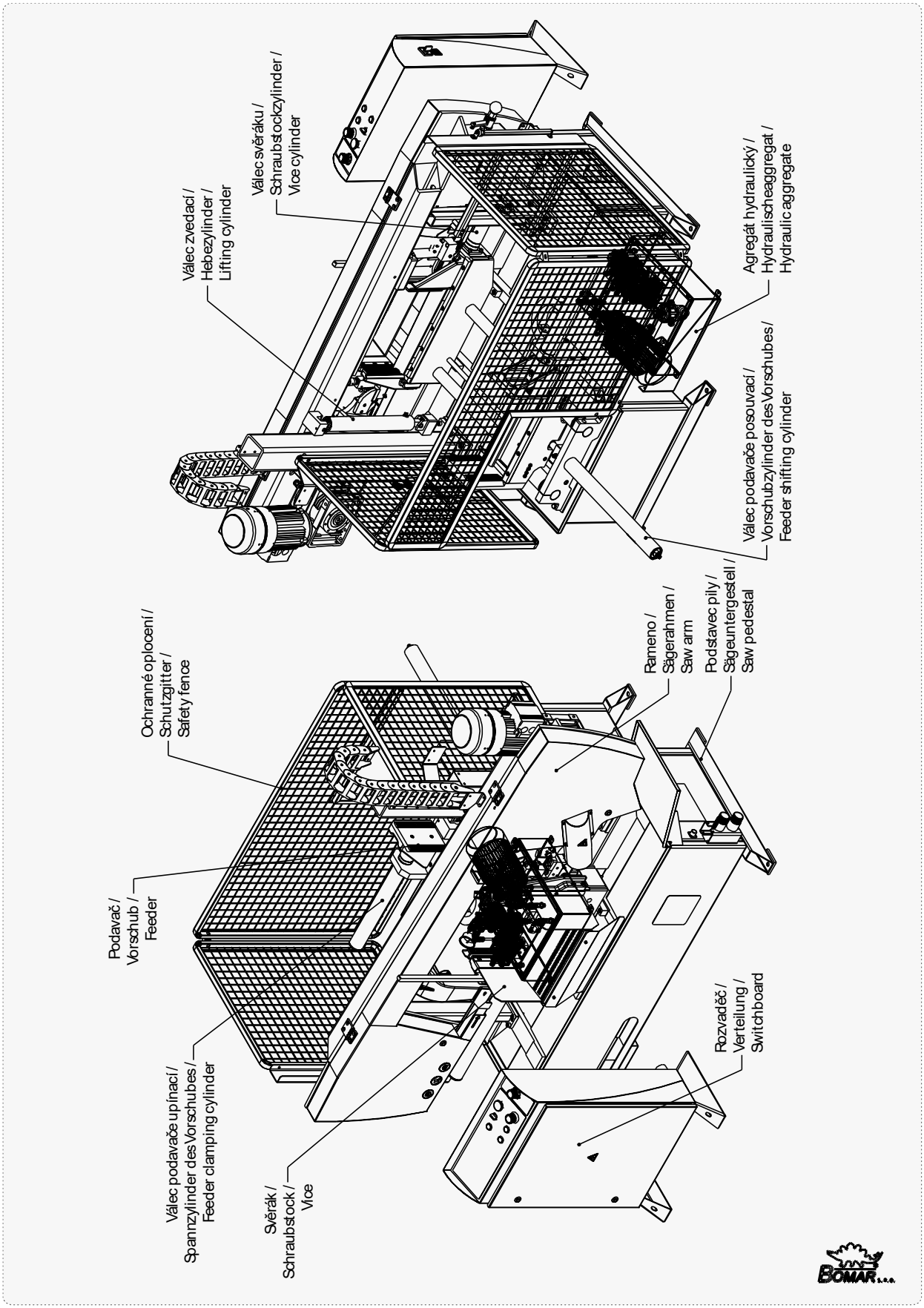

2.4. Transportation and stocking

2.4.1. Conditions for transportation and stocking

Keep recommendations for the manufacturers for transportation and stocking! If the recommendations are not kept, damage can occur to the machine.

- Don't use a forklift truck for handling the machine, if you do not have license for it!
- Don't move under suspended loads! Fault in lifting device may cause serious injury.
- Keep a safe distance from the machine during the transport.
- Temperature of the air from *-25°C to 55°C*, for a *short term* (max. 24 hours) temperature of the air until *70°C*
- Do not expose the machine to radiation (for example microwave radiation, ultraviolet radiation, laser radiation, x-ray radiation). Radiation can cause problems with the machine function and deteriorating condition of the isolation.
- Take measures, to prevent damage by dampness, by vibrations and by shakes.

2.4.2. Transport and stocking preparations

Close the vice and thoroughly oil all blank surfaces.

Lower the saw frame to the lowest position.

Make sure to empty the machine of all traces of the cooling agent.

Fasten all loose parts securely to the machine.

Pack and wrap the control desk securely to avoid damage during transport.

Fix the stickers stating the minimum approximate machine weight to at least five well visible places.

2.4.3. Transport and stocking

The machine must be secured during transportation. Screw on the palette to the floor of the van or the trailer. Be careful that the machine is not damaged during transportation. Store the machine only under conditions mentioned in the manual, to avoid damage of the machine.

It is forbidden to handle the machine any other way, than it is written in this operating instructions, the machine can be damaged.

2.5. Transportní schéma / Transport schema / Transport scheme

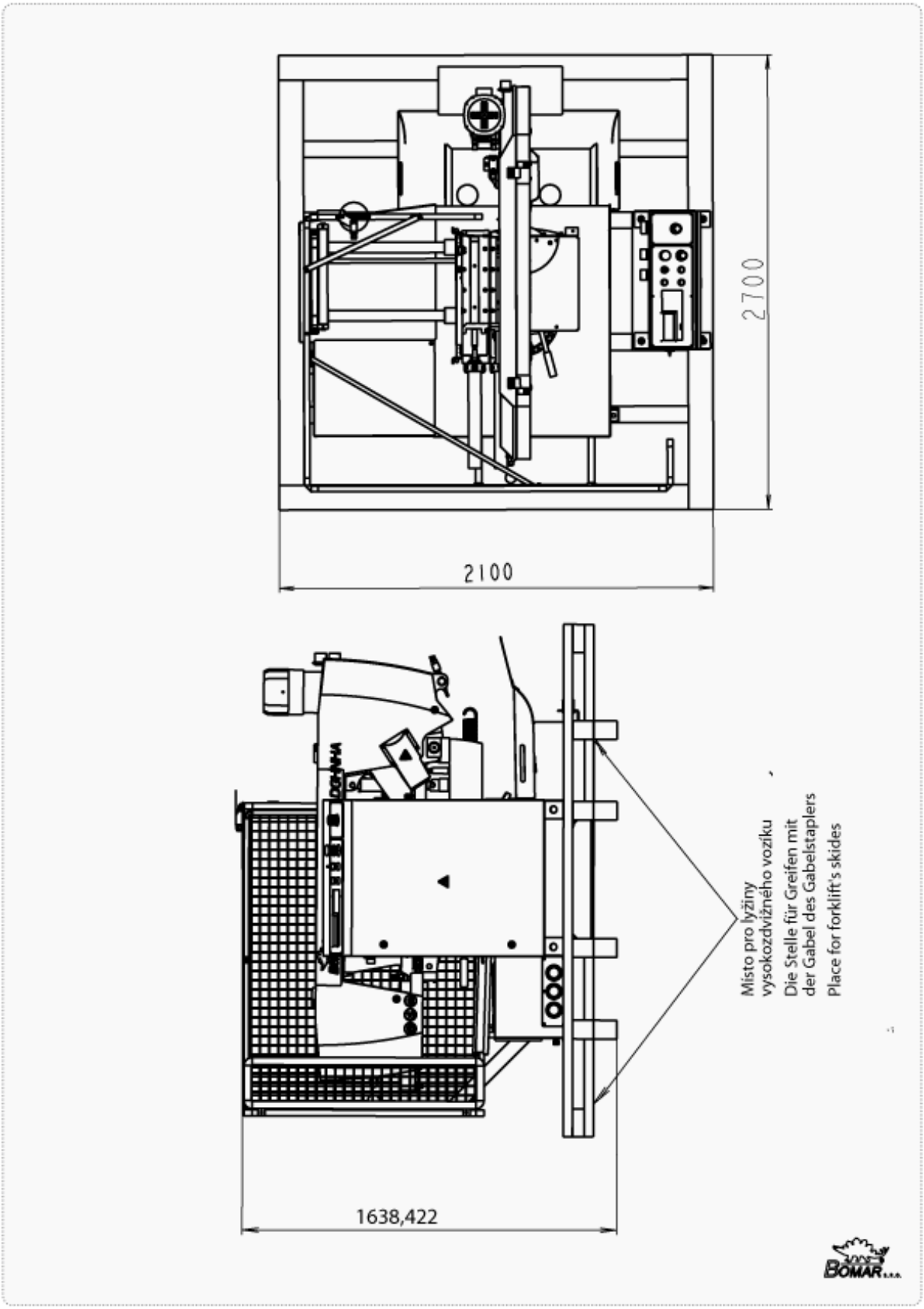

2.6. Activation

2.6.1. Machine working conditions

Keep the conditions of the manufacturer for machine operating! If recommendations are not kept, damage can occur to the machine.

The manufacturer warrants the correct function of the machine for these conditions:

- At temperature air from *10°C to 40°C*, the temperature average during 24 hours must *not exceed over 35°C*.
- At relative dampness of the air in the extend from 30% to 95% (not concentrate). Altitude lower than 1000 metres.

Attention!
If the ambient temperature drops below 15 ˚ C is required before operating the machine to have switch on hydraulic unit around 10 minutes and then made several motion few times (for example, in manual mode) by all hydraulic cylinders. The reason is to heat hydraulic oil to the operating temperature for proper function of the pressure switches (and choke).

- Do not expose the machine to the radiation (for example microwave radiation, ultra-violet radiation, laser radiation, x-ray radiation). Radiation can cause problems with the machine function and deteriorating condition of the isolation.

2.7. Band saw unpacking and assembling

Attention!
Switch off the main switch and lock it, before you start assembly! Otherwise, there is possibility of hazardous machine starting.

Remove the packing from the machine and unpack all parts.

If the hydraulic unit is outside the machine (the machine only connected hoses and cables), it needs to be placed and mounted on a solid basis (floors, etc.). The mounting holes are used on the bottom (bases) of the tank.

Warning:

When transporting the machine may skew the ruler to adjust the height of the shoulder. Before you start using the machine, check the alignment of the rulers and the proper function of the limit switch in all positions.

2.7.1. Machine installing and levelling

Check the floor supporting capacity before machine installing. If the floor capacity does not agree with requirements, you must prepare the necessary base for the machine.

Minimal requirement:

machine weight – Workline 510.350 GANC – 950 kg

+ weight of accessories

+ maximum weight of material

- The machine must be levelled at the horizontal position. All feet of the machine must touch with the floor after levelling
- The machine must be levelled by means of the calibrated spirit level. Spirit level is put on the vice area. Set the roller conveyors according to the spirit level.
- For machine levelling, take care that there is sufficient available space for operation, repair work, servicing of the machine and handling the material..
- The machine including appended parts and accessories must be visible from the place of operation.

2.7.2. Machine disposal after lifetime

Blown out all service fluids (cooling liquid, hydraulic oil) into designated reservoir. Dismantle machine into separate parts and dispose them in accordance with valid directives.

2.7.3. First run of the power pack

Before the first run check:

- The direction of the Pump, while run the power pack for max. 2seconds.
- The cooling fan of the motor has to rotate in the same direction as the arrow on the top of the motor cowling indicates.
- In case of wrong rotational direction, the electrical phase in the connection box is to be changed. This check is required after every disconnection from the power source
- Wiring matches with electrical and hydraulic diagrams
- the electric motors (pump and cooler) are properly connected and have the prescribed rotation
- the hydraulic accumulator with nitrogen gas to the specified value
- aux. elements work right (thermometer, level gauge, heater)

First run (Attention – working pressure on securing valve is set by producer in accoring the hydraulic diagram):

- In the short intervals activate an electric pump
- check for leaks and noise
- Bleed the hydraulic circuit
- if possible, test the circuit function with minimum load
- test the electrical equipment
- during operation monitor measuring equipment, noise, height and temperature of oil in the tank

- During this time a careful bleeding off for the whole hydraulic system is necessary. In case there is no bleeder port, the power pack will bleed itself after a while via the air breather on the tank or the return line filter.
- After multiple start-up.

2.7.4. Filling the reservoir with hydraulic oil

Oil regulations and recommendations of the manufacturer in the technical documentation (appendix) are to be carefully observed. For standard power packs we recommend the oiltype OH-HM32 (DIN 51524) of all known oil manufacturers.

Power packs have to be filled up with clean, pre-filtered oil! The purity of the hydraulic fluid must correspond to the class 10 NAS 1638 (reachable with filter ß =75)!

Filling from container, such as barrels, backets, etc. is not recommended or permitted!

The maximum oil level will be shown on the upper marking at the dipstick or the sight level glass. Overfilling has to be prevent. The maximum filling rate of 15 l/min shouldn´t be exceed.

Oil type	Kinematic viscosity v in mm^2/s in relationship to the fluid temperatur					Freezing point
	0°C	20°C	40°C	60°C	80°C	°C
OH-HM 32	220	100	32	15	7	-40
OH-HV 32	180	67	32	17	11	-40

2.8. Kotevní plan / Verankerungsplan / Grounding plan

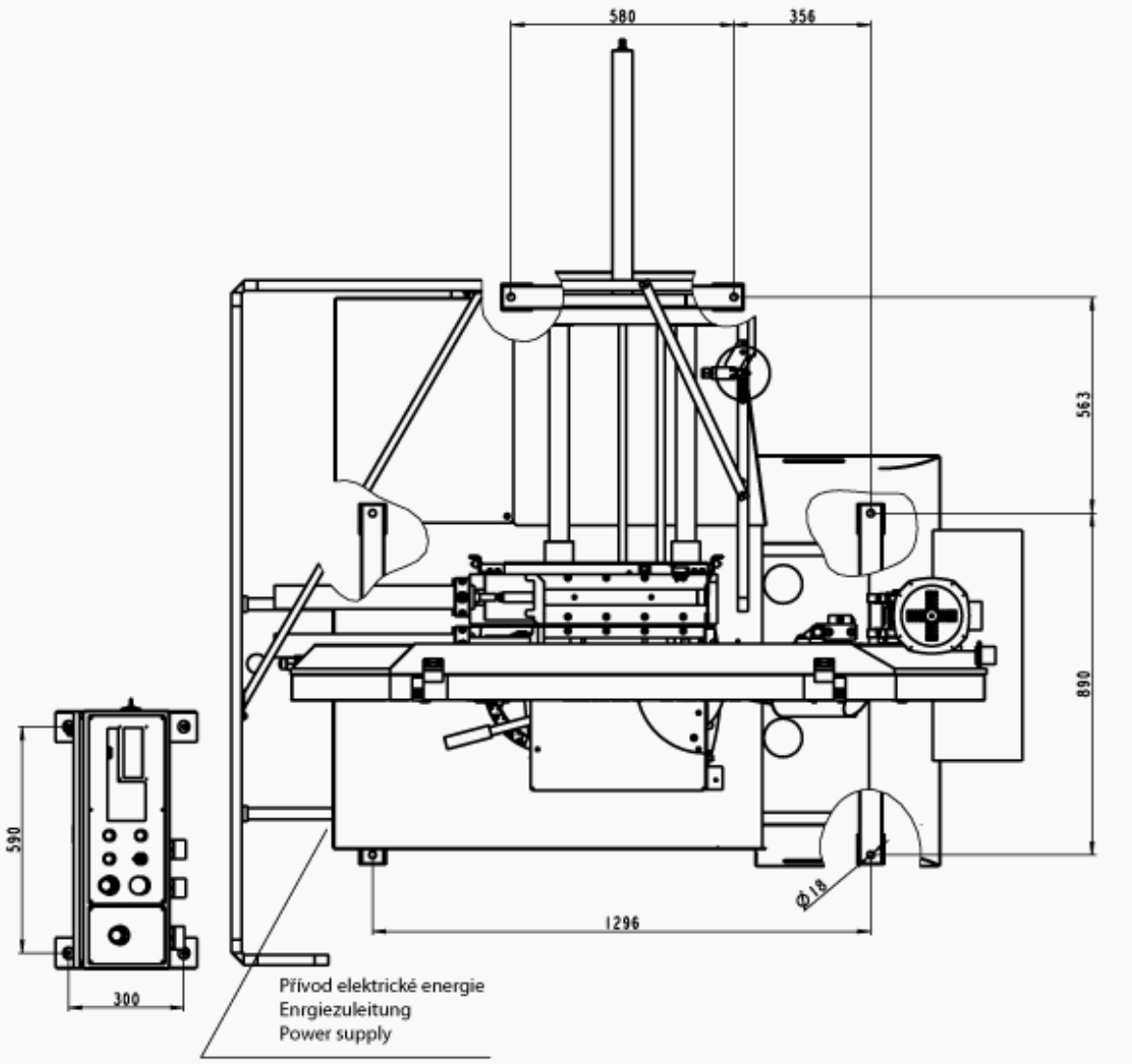

Kotvící materiál / Verankerungsmaterial / Grouding material

- 6x Hmoždina / Dübel / Plug – ø14 mm
- Vrtáno do hloubky / In die Tiefe gebohrt / Drilled to – 140 mm
- Šrouby / Schraube / Screws – M16x135

Šrouby podložit deskami o min. rozměrech P10x100x100
- Die Schrauben mit Platten mit Minimaldimensionen P10x100x100 unterlegen

Screew must be bottomed with plates (min. dimensions P10x100x100)

Požadavky na rovinnost podlahy / Anforderungen an die Bodenebenheit / Requirements for floor flatness

± 10 mm / 1 m

Attention!
Only a qualified professional must carry out the servicing and repairs of the electric equipment! *Take special care during work with electrical equipment. High voltage shock can have fatal consequences! Always keep notes about work safety.*

2.9. Electrical connection

Electrical parameters of the machine:

- Service voltage: ~ 3×400 V, 50 Hz, TN-C-S
- Total input / Max. fuse: 5,3 kW / 16 A

Note:
The values of the crosscut of the conductor and the rated current are in the norms.

Before connecting switch off the main switch of the power supply circuit for the machine and ensure dry place when doing connecting works!

Service voltage must agree with the line voltage! Crosscut of the supply line must respond with rated current for max. machine load.

Note:
The socket with the fork can be used only at the machines with the rated current less than 16 A and total input less than 3 kW.

Attention!
In this case the extra main switch becomes primary and the main switch on the machine has only secondary function.

In case the machine is connected with a direct connection, an extra main switch must be added which can be locked in zero position.

2.9.1. Check the direction of the saw band

After the machine has been successfully connected, briefly switch on the machine and put the driving engine of the band in the running position. The direction must be in accordance with the arrow direction on the saw band cover. In case the direction of the saw band does not match, two phases at the terminal strip must be switched.

2.9.2. Check machine connection into electrical network

2.10. Filling of the cooling system

Prepare the mixture of the water and the cooling liquid. Keep the concentration specified by manufacturer. Shift away the cover from the drainage hole. Fill the mixture of the water and the cooling liquid to the tank of the cooling system. Area of the tank for the cooling liquid is discovered from the chapter *Technical data*.

Note:
If machine is equiped with microniser, fill microniser with prescribed cooling liquid. This made the Microniser ready for use.

Let the drainage hole opened and with the sieve during operation, because it secures the right work of the cooling system. Filling the tank with the cooling liquid, take care that the liquid does not drip out of the tank and the tank does not overflowed.

2.11. Check machine function

Check, if the machine or some parts of the machine were not damaged during transport.

Check, if covers are installed and functional. Check by means of the Tenzomat if the saw band is correctly stretched. If it is necessary, you can stretch the saw band according to chapter *Selection and replacement of the saw band*. Values of the saw band stretching are on the Tenzomat. Switch on the main switch and check the motors and systems (saw band drive, hydraulic pump, cooling pump, chips conveyor).

Open and close the main vice. Turn the saw frame of the band saw from one outer position to other outer position. Raise the saw frame to the top position and drop the saw frame to the lowest position.

Start the machine with the cooling pump and let it run without load until the cooling system will be filled with cooling liquid. As soon as the cooling liquid starts to escape from the nozzles of the cooling system, the cooling system is ready for the operation. Carry one cycle of cutting without material. Check, if the machine runs with no irregularities. If all machine functions are right, the machine is ready for operation..

Attention!
When you connect the machine to the electrical network observe correct connection of all phases!
ENGINE IN IN HYDRAULIC AGGREGATE CANNOT BE OPERATED WITH REVERSE TURNING MORE THEN 10 SECONDS!!!

2.12. Saw band

Refit the saw band cover only after you have installed and tightened the saw band.

2.12.1. Saw band size

4780×34(32)x1,1mm

2.12.2. Selection of the saw band tooth system

The manufacturers provide the saw bands with constant and variable tooth system. The important factor for selection of the tooth system is length of the cutting canal with respect to the size of the product

BOMAR recommended Variable tooth system for band saw.

1. *Constant tooth system* – the saw band has parallel tooth pitch all over length. This way is suitable for cutting of solid material.
2. *Variable tooth system* – tooth pitch is variable. Variable tooth system is used for profiled materials and bundle cutting. Variable tooth pitch lowers vibration of the saw band, increases service life of the saw band and quality of the cutting area.

In tables, there are advised type of the tooth system depending on sizes and form of the cutting material.

Footnotes:

Z_pZ – teeth number on one inch S – tooth with zero angle of the teeth K – tooth with positive angle of the teeth

Examples of the tooth system marking:

32 S – number „32" means 32 teeth on one inch (that means constant tooth system), letter „S" marks teeth with zero angle of the tooth.

4–6 K – number „4–6" means 4 till 6 teeth on one inch
(that means variable tooth system); letter „K" marks teeth with positive angle of the teeth.

2.12.3. Saw band running-in

Running-in: Cut the material with the frame lowering reduced to 50% only. When vibrations occur increase or decrease the band speed.

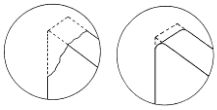

When cutting small pieces run the band until approximately 300 cm^2 of material has been cut. When cutting large pieces run the band for 15 minutes approximately. When the band has been run, increase the lowering-speed to normal speed. The running in of the saw band avoids micro-breaks on the cutting edges of new saw band ensuing from first excessive stress. This would decrease service life substantially. The optimal running in of the saw band produces ideal rounded cutting edges and therefore the conditions for an optimal service life.

Note: *Run regrinding saw bands too.*

2.12.4. Tables for teeth selection

SHAPED MATERIAL (D_p, S = mm)

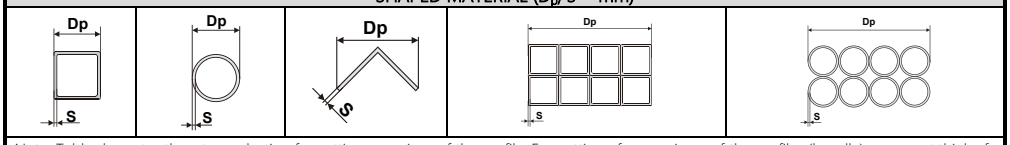

Note: Table shows tooth system selection for cutting one piece of the profile. For cutting of more pieces of the profiles (bundle), you must think of the size of the wall as double size of the wall of one profile (that means, size „S" equates to 2×S). In table, there are tooth systems constant and variable.

Size of the wall S [mm]	Tooth system (Z_pZ) Outer diameter of the profile D_p [mm]					
	20	40	60	80	100	120
2	32 S	24 S	18 S	18 S	14 S	14 S
3	24 S	18 S	14 S	14 S	10–14 S	10–14 S
4	24 S	14 S	10–14 S	10–14 S	8–12 S	8–12 S
5	18 S	10–14 S	10–14 S	8–12 S	6–10 S	6–10 S
6	18 S	10–14 S	8–12 S	8–12 S	6–10 S	6–10 S
8	14 S	8–12 S	6–10 S	6–10 S	5–8 S	5–8 S
10	-	6–10 S	6–10 S	5–8 S	5–8 S	5–8 S
12	-	6–10 S	5–8 S	5–8 S	4–6 K	4–6 K
15	-	5–8 S	5–8 S	4–6 K	4–6 K	4–6 K
20	-	-	4–6 K	4–6 K	4–6 K	3–4 K
30	-	-	-	3–4 K	3–4 K	3–4 K
50	-	-	-	-	-	3–4 K

Size of the wall S [mm]	Tooth system (Z_pZ) Outer diameter of the profile D_p [mm]					
	150	200	300	500	750	1000
2	10–14 S	10–14 S	8–12 S	6–10 S	5–8 S	5–8 S
3	8–12 S	8–12 S	6–10 S	5–8 S	4–6 K	4–6 K
4	6–10 S	6–10 S	5–8 S	4–6 K	4–6 K	4–6 K
5	6–10 S	5–8 S	4–6 K	4–6 K	4–6 K	3–4 K
6	5–8 S	5–8 S	4–6 K	4–6 K	3–4 K	3–4 K
8	5–8 S	4–6 K	4–6 K	3–4 K	3–4 K	3–4 K
10	4–6 K	4–6 K	4–6 K	3–4 K	3–4 K	2–3 K
12	4–6 K	4–6 K	3–4 K	3–4 K	2–3 K	2–3 K
15	4–6 K	3–4 K	3–4 K	2–3 K	2–3 K	2–3 K
20	3–4 K	3–4 K	2–3 K	2–3 K	2–3 K	2–3 K
30	3–4 K	2–3 K	2–3 K	2–3 K	1,4–2 K	1,4–2 K
50	2–3 K	2–3 K	2–3 K	1,4–2 K	1,4–2 K	1,4–2 K
75	-	2–3 K	1,4–2 K	1,4–2 K	1,4–2 K	0,75–1,25 K
100	-	-	1,4–2 K	0,75–1,25 K	0,75–1,25 K	0,75–1,25 K
150	-	-	-	0,75–1,25 K	0,75–1,25 K	0,75–1,25 K
200	-	-	-	0,75–1,25 K	0,75–1,25 K	0,75–1,25 K

SOLID MATERIAL (D = mm)

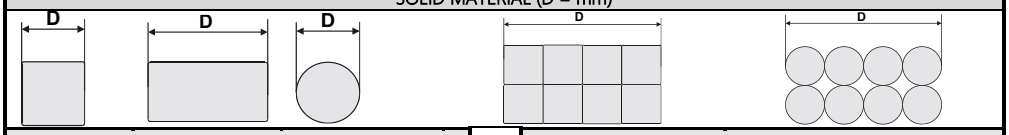

Constant tooth system	
length of the cut D	tooth system (Z_pZ)
to 3 mm	32
to 6 mm	24
to 10 mm	18
to 15 mm	14
15–30 mm	10
30–50 mm	8
50–80 mm	6
80–120 mm	4
120–200 mm	3
200–400 mm	2
300–800 mm	1,25
700–3000 mm	0,75

Variable tooth system	
length of the cut D	tooth system (Z_pZ)
to 30 mm	10 –14
20–50 mm	8–12
25–60 mm	6–10
35–80 mm	5–8
50–100 mm	4–6
70–120 mm	4–5
80–150 mm	3–4
120–350 mm	2–3
250–600 mm	1,4–2
500–3000 mm	0,75–1,25

3. Machine control

3.1. Starting the band saw

» • Switch on the main switch of the band saw. The main switch is placed on the switchboard side.

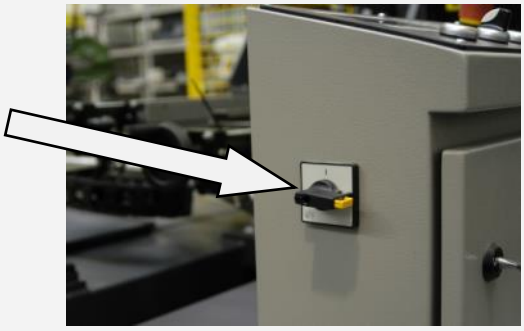

• Refer the machine

3.2. Control panel

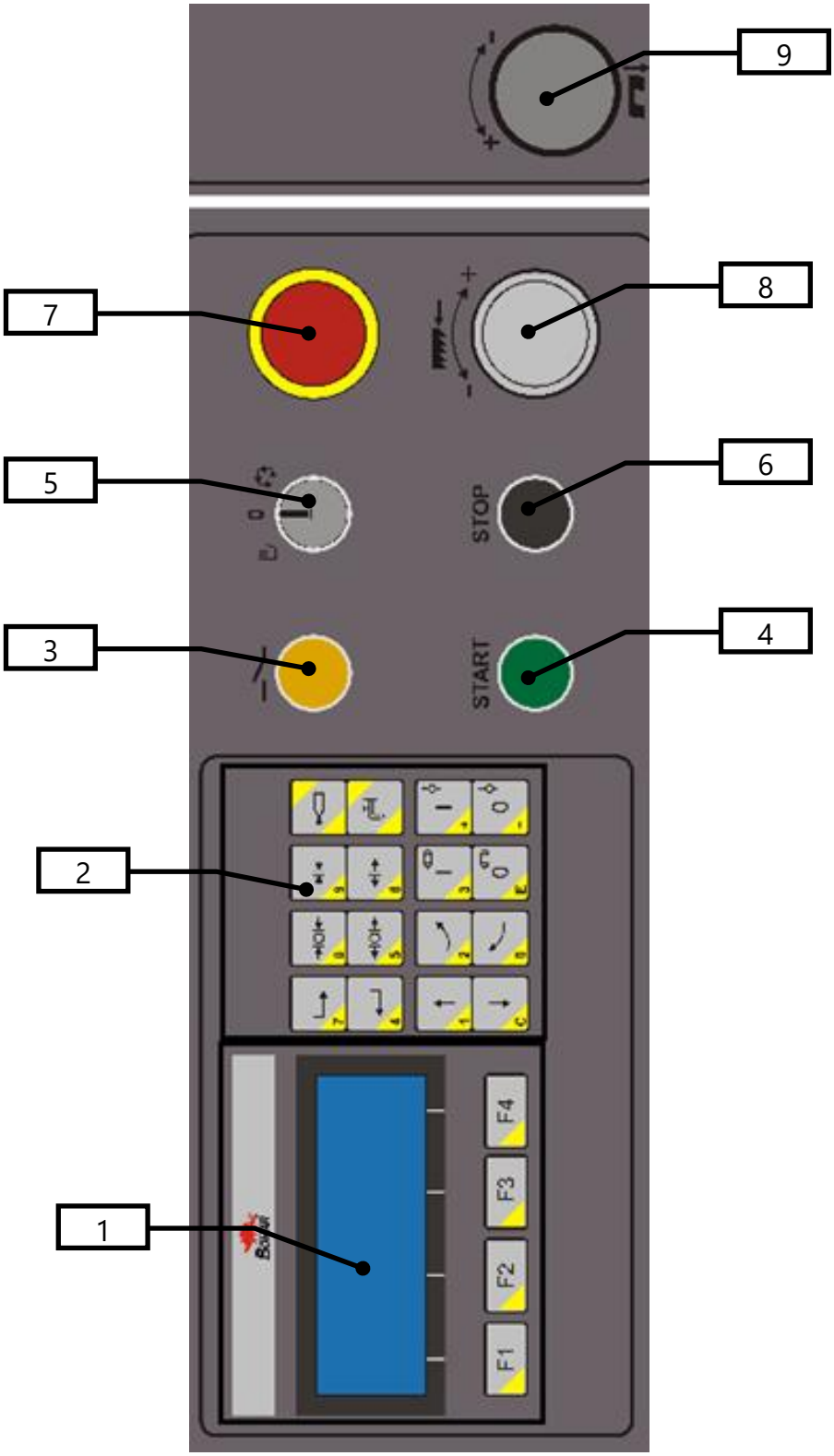

1	LCD LCD displays status information and menu.
2	Control keys / numeric keypad.
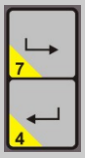	Feeder movement Pressing and holding button move with feeder to and from the machine (in manual mode)
	Open/Clamp feeder vice Pressing and holding button open or clamp feeder vice in manual mode.
	Open/Clamp main vice Pressing and holding button open or clamp full stroke vice in manual mode.
	Cooling system selection Top – Cooling with Microniser (optional accessories) Below – Cooling is switched on (even when the drive is not running).
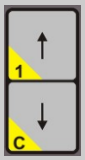	Move saw frame up/down Pressing and holding buttons rises or drops saw frame. As you move down, you can activate the rapid moving by pressing F1 button simultaneously with
	no function
	Turn on / off saw blade Button with symbol „I" turn on saw blade drive, button with symbol „0" turn off saw blade.
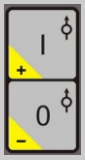	Turn on /off hydraulic circuit Button with symbol „I" turn on hydraulic circuit, button with symbol „0" turn off hydraulic circuit. The hydraulic circuit is automatically switched on when needed.
3	Safety circuit Switch on the safety circuit by pressing button.
4	Start cycle After pressing the button will start the cutting cycle. To turn off when you press the STOP

5	Selecting a mode machines pro manuální režim for automatic mode
6	STOP button interrupts the cycle
7	Button TOTAL - STOP In emergency cases, the state machine immediately to rest
8	Frequency converter Turn to change the blade rotation speed in the range of 20-120 m / min.
9	Governing valve Adjust the speed of the arm sinking to the cut by governing valve. ATTENTION! If you keep closing the throttle valve too tightly, the valve seat may wear off which causes its leakage. Therefore, close the valve always gently.

3.3. Machine referring

Before using the saw, you must refer machine. Referring is necessary for correct positioning of the saw feeders.

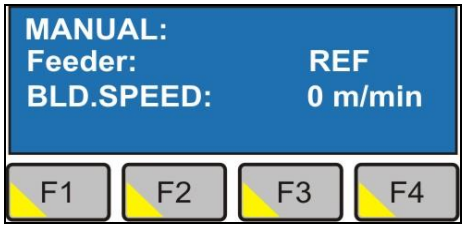

If the machine is not referred, it is not possible to move the feeder and on the LCD instead of a numeric value text REF.

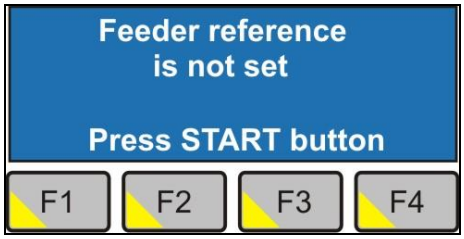

Operator is informed that the machine is not referred after machine start. For machine referring switch into automatic mode. Then START button begin flash. Press START button for begin referring process. After this process press F4 to confirm.

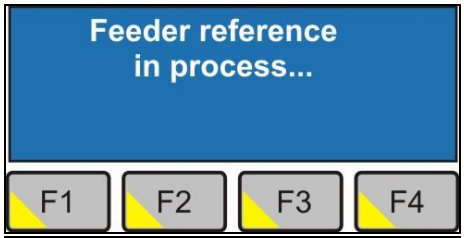

3.4. Machine control in manual mode

- Switch machine into manual mode – key switch on control panel on .

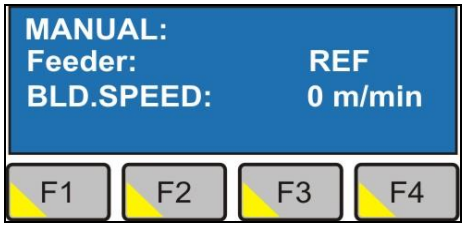

- The LCD displays the following menu, where is information about the selected cutting speed.
- All movements are controlled by an operator using the control panel, see chapter Control panel.

- Manual mode serves primary for material loading into machine

Procedure for material loading before automatic cycle:

1. Before material insertion, open both vices into maximal to the position what is needed to insert material open.

Attention!
Feeder vice must be clamped before main vice.

2. Clamp material with both vices.
3. Switch the machine in automatic mode and and follow the procedure for the automatic cycle.

3.5. Machine control in automatic mode

Attention!
Before the automatic cycle, the material must be clamped with both vices.

1. Switch machine into automatic mode – key switch on control panel on .

2. The LCD displays the following menu. The Preselect indicates the current program. The system can store up to 20 programs, move between them using the F1 and F4. F2 key (M +) saves all program values in the system. Press button F3 (Finish) on program what will be performed first in automatic mode.

3. After entering the programs values and after F3 (Finish), the operator is asked to perform trim cut. F4 not perform trim cut.

4. If the operator chose the trim cut on LCD is info about the progress. After the completion of trim cut, confirm by button F4.

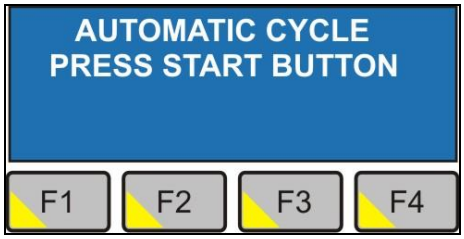

5. Now begins the automatic cycle. It begins by pressing the START button. The work cycle begins on the program, where was editing completed by button F3 (END) and ends on the last non-zero program. *Example: I edited program no. 2 last time (F3 was pushed on program no.2), program no. 3 and 4 has correct values, programs no. 5, and more are empty. Control system loads program no. 2 then program no. 3 and last performed program is no. 4.*

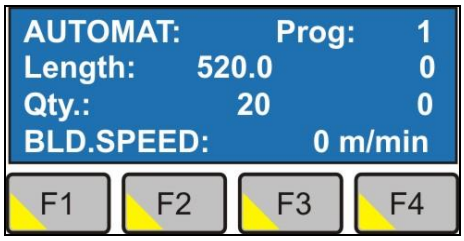

6. The operator is informed about the automatic cycle on the LCD.

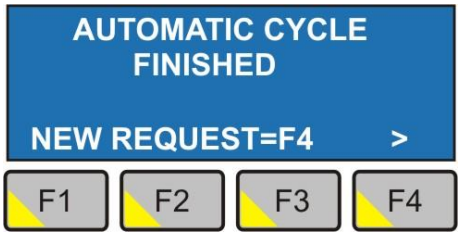

7. After completing automatic cycle, operator may enter new values for the next cycle (F4).

8. If the automatic cycle has finished and there is no material available for another cut, information on the material missing appears on the LCD.

9. To load the material, it is necessary to turn the mode switch (key) on the control panel to the manual mode position and load the material in the manual mode by the above described procedure.

10. To proceed to the automatic mode after manual load-in, it is necessary to turn the mode switch (key) on the control panel back to the automatic mode position.

11. The LCD shows information that the automatic cycle has been interrupted.

    On this screen, you can choose

    - F1 to enter another new automatic cycle
    - or F4 to proceed with the automatic cycle entered.

12. If F4 is selected – the automatic cycle entered continues – a screen appears with the menu of how to start the cutting cycle:

    - by pushing the **"Start"** button on the control panel, you choose beginning of the cutting cycle **with material cut-in;**
    - **F4** is a choice of starting the cutting cycle **without material cut-in.**

13. If the operator has chosen material cut-in, the LCD shows information on its course; subsequently, after the cut-in has been completed, the operator is asked to confirm it by pushing the F4 button.

    Further steps are identical with the above described steps No. 5, 6, 7.

3.5.1. Final cutting of material of short lengths at automatic cycle

If material with very short lengths is cut the end of the material is located behind the laser barrier at the feeder. The laser barrier can´t detect the end of the material.

The machine reports "No material" and it is impossible to run the machine.

Thus it is necessary to cover the laser barrier by the shutter installed at the machine.

Then machine control can go in a standard way.

It is necessary to lift the shutter after final cut.

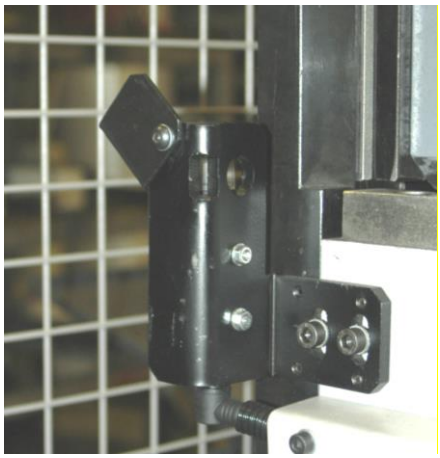

3.5.2. Cycle breaking – automatic mode

»
- STOP button

  Semi-automatic cycle is interrupted by pressing button 5 – STOP of the cycle

  The arm stops fall into cut and saw blade is stopped.

  By pressing button *4 – START of the working cycle*, you can start the cycle.

- TOTAL STOP button

  In case of the risk, press button TOTAL STOP.

  After pressing TOTAL STOP button, saw band drive is immediately broken and the arm sinking is stopped.

- Reactivation

  4. Turn button TOTAL STOP according to the arrows (on the button).
  5. Lift saw arm above cut material and push START button.

3.6. Machine setup

Setup mode is activated by switching mode selection switch to position 0. After the switch is in position 0 on LCD is displayed:

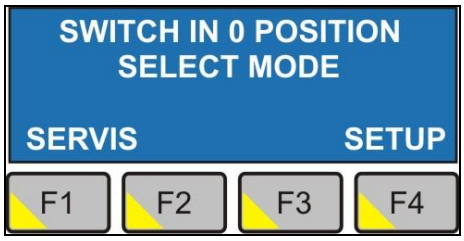

Parameters in the menu SERVICE are password protected. The parameters in the SETUP menu are common and are not password protected.

Password:	947

3.6.1. SETUP

on LCD	Description
Switch off motor: * Up. position Down position <ESC> > F1 F2 F3 F4	Turn off saw blade drive after cut: • Up. position – saw blade lifts after cut and saw blade drive is turned off above material. • Down position – saw blade drive is turned off immediately after cut. • F1 back, F4 next option
Cooling: * Not use With bandsaw motor < > F1 F2 F3 F4	Cooling • Do not use – cooling is off, suitable for cutting special materials such as cast iron • With saw blade engine – when the blade is running, also cooling pump is running. • F1 back, F4 next option
Swarf conveyer: * Not use With bandsaw motor < Complette cycle > F1 F2 F3 F4	Swarf conveyer (optional accessories) • Do not use swarf conveyer • With band saw motor – when the blade is running, also swarf conveyer is running. • F1 back, F4 next option
Switch off hydraulic: * 5 min 30 min < don't switch off > F1 F2 F3 F4	Switch of time for hydraulic unit: • 5 min. – 30 min. – do not turn off • F1 back, F4 next option
Piece cut of correction: 1.5 mm < <OK> > F1 F2 F3 F4	Piece cut off • The settings for the proper cut lengths in automatic mode • Saw blade thickness • F1 back, F4 next option
Language HMI: Cesky * English < Deutsch > F1 F2 F3 F4	Language: • Choose control menu language • F1 back, F4 next option
SPEED DISPLAYING: * m/min ft/min < > F1 F2 F3 F4	Units for saw blade speed • m/min or ft/min • restart machine to apply change • F1 back, F4 next option

on LCD	Description
LENGTH DISPLAYING: * mm inch < > F1 F2 F3 F4	Units for lengths • mm or inches • restart machine to apply change • F1 back, F4 next option

3.6.2. SERVIS (password)

on LCD	Description
SERVIS: FEEDER LENGTH: 602 mm <ESC> <OK> > F1 F2 F3 F4	• Feed length – Specifies the length of the feeder. Do not change parameter – is set from the factory. • F1 back, F4 next option, F2 save current option
SERVIS: SPEED CORRECTION: 21 < <OK> > F1 F2 F3 F4	• Speed correction – could be set in range 0–250, displayed constant is for the calculation belt speed from the analog input. • F1 back, F4 next option, F2 save current option
SERVIS: ELGO 550 < 0 > F1 F2 F3 F4	• ELGO – feeder position admeasurement. Do not change! • For service purposes. Displays a variable number of linear pulse measurements • F1 back, F4 next option, F2 save current option
SERVIS: Divergence of laser 160 mm < <OK> > F1 F2 F3 F4	• Laser deviation • The laser is placed behind the feeder vise jaws • The value affects multiple feeding. Do not change! • F1 back, F4 next option, F2 save current option
SERVIS: Main vice open.time 60 < <OK> > F1 F2 F3 F4	• Opening time for main vice. • Opening time is in milliseconds. • F1 back, F4 next option, F2 save current option
SERVIS: Feed vice open.time 40 < <OK> > F1 F2 F3 F4	• Opening time for feeding vice • Opening time is in milliseconds. • F1 back, F4 next option, F2 save current option

If you choose to change the keyboard units from "inch" to "mm", there is no automatic conversion of constants in machine setup „Servis“ and „Setup“.

It is necessary to calculate by the formula: 1 inch=25,4 mm a 3,28 ft/min=1m/min.

It is necessary to calculate these values:

Machine setup „Servis“:

- Piece cut of correction (when calculating the unit "inch“ rounded to 1 decimal place = 0.0 inch)

Machine setup „Setup“:

- Feeder length (when calculating the unit "inch“ it has to be rounded to 1 decimal place = 0.0 inch)
- Speed correction (when calculating the unit "inch“ it has to be rounded to 1 decimal place = 0.0 inch)
- Divergence of laser (when calculating the unit "inch“ it has to be rounded to 3 decimal places = 0.000 inch)
- Feeding correction (when calculating the unit "inch“ it has to be rounded to 3 decimal places = 0.000 inch)

3.7. Error messages

Error	Description
	The safety circuit is not turned on (pos. 2 on control panel). Push safety circuit button (on pos. no. 2 on control panel) to remove error message.
	Total Stop button is active – pushed. Turn TOTAL STOP button by the arrows, and disable it. Press F4 to confirm the disorder.
	Saw belt not is properly tensioned. Remove the fault and press F4 to confirm.
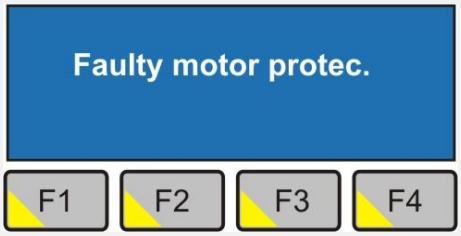	Motor overload, thermal protection is activated. Do not overload blade engine! Remove the fault and press F4 to confirm.

3.8. Band saw adjusting

3.8.1. Cutting speed adjusting

Speed of the saw band is possible change from *20 to 120 m/min*. You can effect to adjusting speed of the saw band following.

Use the frequency convertor to adjust requested speed of the saw band. You can see the speed on display..

3.8.2. Speed adjustment of the arm lowering

Band saw is equipped with cutting pressure regulation at one (fixed) lead cube.

Set the speed of the arm lowering to the cut by control valve for Cutting pressure regulation

- Set the lower speed of the arm lowering to the cut by turning the switch clockwise.
- Set the higher speed of the arm lowering to the cut by turning the switch anti-clockwise.

Notice:
If you keep closing the throttle valve too tightly, the valve seat may wear off which causes its leakage. Therefore, close the valve always gently.

3.8.3. Angular cut setting

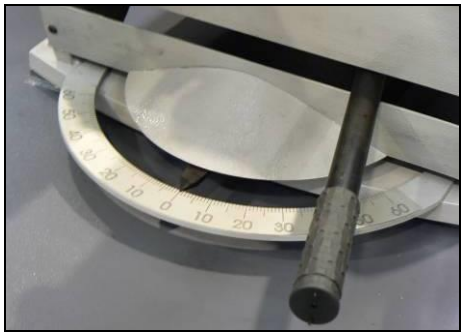

1. Release securing lever of the console, Swivel the frame to the desired angle by pulling the saw arm. Angle is shown on scale. a páku znovu utáhněte. Then re-tighten the lever.

2. According to the cutting angle is needed to move the vice. For cutting angle less than 0 ° move vice to the right, for cutting angle more than 0 ° move vice to the left.

angle < 0°	angle ≥ 0°

Attention!
Moving parts of the vice must be moved when saw arm has zero angle of rotation and closed vice jaws.
Moving vice jaw of vice must be in endmost position otherwise there is a danger of collision saw arm with vice.

3.8.4. Electronic angular cut setting – optional accessories

Desired cutting angle is shown on LCD. How to use electronic admeasurement is described in special instruction manual.

Intended for applications with frequent mitre cuts

The digital indicator of the arm turning angle prevents possible mistakes caused by inaccurate reading of an angle on the scale, and increases the speed of preparation for cutting. In connection with LaserLine, the digital indicator will make every band saw the most effective tool for mitre cuts.

A large, easy to read display and accurate measuring of the arm position with a magnetic tape allow the angle to be set with the maximum accuracy.

The measuring unit is set by the manufacturer. However, its further functions may be easily controlled with four keys.

Zero position setting

1. Turn the saw arm to a zero angle position.

2. Push the Incr/Abs key (even several times) until "0" is shown on the display.

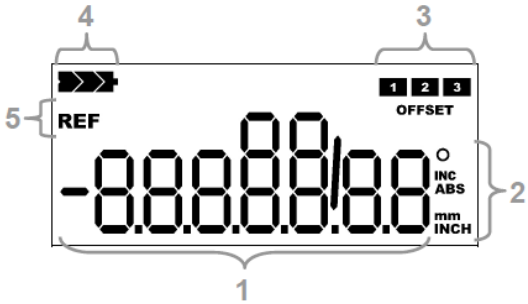

Digital measuring adjustment

Position	Description
1	Current position
2	Unit, measuring mode
3	Active additional constant (* key)
4	Battery status
5	Reference record shall be made – after the apparatus is switched on.

Description of key functions:

Key	Stop mode	Setting mode
F P	Basic key	Entering parameters (3 sec) Saving parameters and returning (3 sec)
F P + Set	Reference recording (P09 value)	-

Key	Stop mode	Setting mode
Set →	Change of displaying in inches	Selection of following decade
Incr / ↑ Abs	Absolute and incremental measuring	Change of active decade o +1
* +\-	Selection of additional constant	Change of sign ·

Description of key functions at measuring initialisation:

Key	Description
F P	Induces calibration of the apparatus when it is switched on (battery inserted).
Incr / ↑ Abs	Induces calibration of the apparatus and sets default values when the apparatus is switched on.

Description of digital measuring parameters:

Parameter	Description	Default value
P01 A	Measuring configuration: A = 0: positive direction of measuring A = 1: negative direction of measuring	0
P02 A	Measuring unit: A = 0: mm / symbol "mm" A = 1: inch / symbol "Inch" A = 2: mm / symbol "m" A = 3: mm / symbol "°" A = 4: mm / no symbol	0
P03 A	Decimal point (0...4) > only for mm	2
P05 ABC	Key blocking: A: "Set" key (0 = active / 1 = inactive) B: "Incr/Abs" key (0 = active / 1 = inactive) C: "*" key (0 = active / 1 = inactive)	000
P08	Correction factor (0.0001...9.9999)	1.0000
P09	Reference (-9999999 ... +9999999)	0
P10	Additional constant 1 (-9999999 ... +9999999)	0
P11	Additional constant 2 (-9999999 ... +9999999)	0
P12	Additional constant 3 (-9999999 ... +9999999)	0
P13 A	Configuration of additional constants (0...3) A = 0: inactive (cannot be selected) A = 1: Additional constant 1 active A = 2: Additional constants 1 & 2 active A = 3: Additional constants 1 & 2 & 3 active	3
P90	No function	0
P99	Displaying firmware version	x.xx

3.8.5. Saw frame upper stop position

Arm position is monitored by a limit switch.

If you want to shorten the time of operations in automatic cycle, you have to adjust the height of the saw arm according to the height of the cutting material.

1. Insert a material into the vice
2. Press button **Arm up** and lift the saw arm to the upper position.
3. Carefully lower the saw arm button **Arm up** to the material (or + **F1** for **rapid move**). About 5-10 mm above the material stop
4. Adjust arm height to the height of the material so that the top of the adjustable eccentric with a scale showing the desired value (the value corresponds to the height of the eccentric material)
3. Press **START** to begin the cutting process.

Setting the upper position of the arm using incrementa sensor (optional accessories):

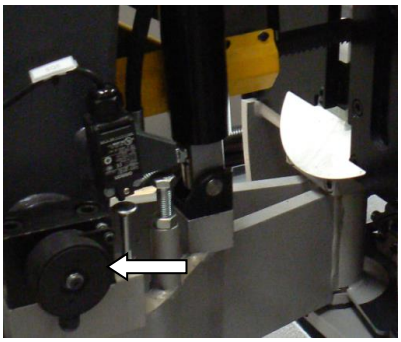

1. Insert a material into the vice
2. Press button **Arm up** and lift the saw arm to the upper position.
3. Carefully lower the saw arm button **Arm up** to the material (or + **F1** for **rapid move**). About 5-10 mm above the material stop
4. In the case of the upper arm with the position incremental sensor is set, the on-screen control panel message that the upper arm position is adjusted.
5. Press **START** to begin the cutting process.
6. Sawband cuts material to the bottom position of arm and return to the top position of the arm, the arm that was before the work - before pressing **START**

3.8.6. Saw frame lower stop position

The lower stop limits the lowest position of the saw frame. This stop point has to be checked at least once a month. If the lower stop point is incorrectly adjusted, the cutting table can be damaged or the material will not be cut completely.

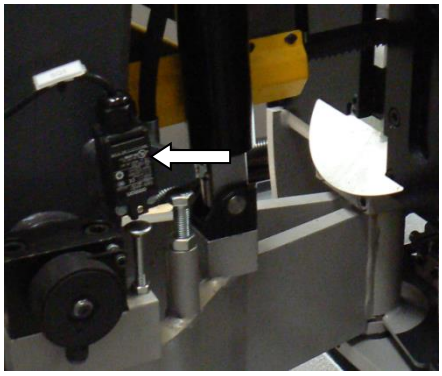

It is oriented so that the angle of the arm, possibly cutting band saws angle is 0.5 ° in the lower position.

The lower position of the arm can be adjusted with an imbus screw.

Limit switch is set by the manufacturer is not necessary to set it.

3.8.7. Adjusting band guides

If you want to achieve a smooth and precise cut, it is helpful to position the guide cube as close as possible to the material.

1. Release the stopping lever of the listel. Move the left part of the guide so that the left edge of the guide blocks is as close as possible cutted material.
2. Lower the frame to the lower position and check the position of the guide cube towards vice loading area. The guide cube must be a distance of at least 10 mm from the vice loading area.
3. Tighten the lever of the gib and check the guide cube setting once more for possible collision with binding table or vice jaw.

3.8.8. Brush adjustment

The brush for chip removal from the saw band influences cutting durability saw band lifetime and wheels lifetime, hard metal guides and finally the cut accuracy. Brush adjustment must be checked every shift.

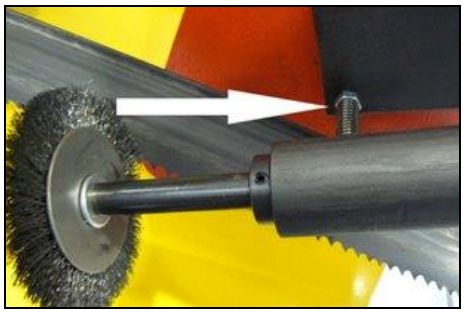

1. Release the fixative screw of the brush. It is possible to move with the brush.
2. Set the brush to the saw band according to the picture.

Attention!
*The brush **must not** touch the bottom of the saw teeth!*

3. Tighten the fixative screw.
4. In case, that the brush is not turned right (driving wheel slips on the driving wheels of the saw band), push by means of the screw (see arrow) driving wheel of the brush to the driving wheel of the saw band.

Attention!
The screw must not be tightened with heavy force, because driving wheel of the brush can be damaged or the lifetime of the bearings of the driving wheel of the band can be lowered!

3.9. Material insertion

- Never walk under a suspended load!
- Never climb onto the gravity-roller conveyor!
- Do not hold the material for clamping material to the vice! The vice can cause injury!

3.9.1. Handling agent selection

- Use the strong handling agents to lift and transfer the material!
- Handle with the material only with the lift truck or use the suspension strands and the crane!
- Do not use the lift truck or crane in case that you do not have the license to handle with it!

3.9.2. Insertion

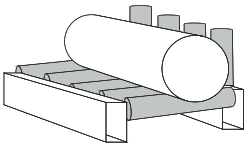

Insert material to the vice and ensure that the material cannot move in the vice or fall from the vice after the clamping. If you cut long pieces of the material (for example rod, tube), you must use the roller conveyors for material shifting to the band saw. Contact Bomar for more information about roller conveyors

Make sure the conveyor is long enough and the material cannot tip off the conveyor.

Be especially careful with round materials that it always stays on two vertical rollers and that it cannot fall off the conveyor!

When cutting short pieces to be used roller support, not to fall off the track.

Length submission is then limited = 550 mm (one stroke short piece)

3.9.3. Bundle material cutting

> ***Attention:***
> *Manualbundle clamping device is not standard equipment. Without this device is a not possible cut bundle.*

If you want to cut the material in the bundle, there are suggestions for the positioning of bundles

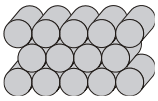

Round material bundle: Take care especially with round material that the bars are put according to the picture. If the bars are put differently, you may have problems with movement.

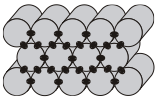

Always weld the material at the rear end of the bundle to secure it from moving.

Before welding always, switch the machine off at the main switch! The magnetic fields, which often occur during welding, may damage the controls!

> ***Attention:***
> *Not all material shapes are suitable for bundle cuts. Keep the recommendation of your supplier of the saw bands for material insertion to the bundle.*

In order to keep the cut material better in a vice, we recommend using hydraulic bundles material that does not belong to the standard equipment of the machine, but is an optional accessory. It is particularly suitable when cutting uneven material.

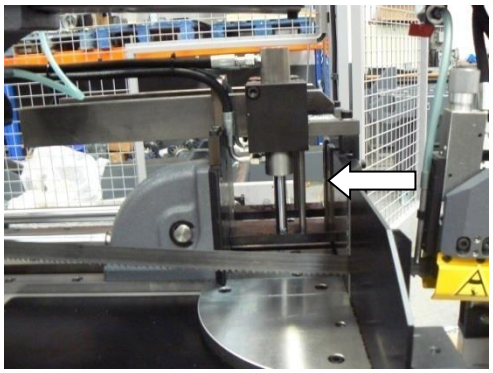

4. Machine service

4.1. Saw band dismantling

During the dismantling, take care that you do not damage the limit switch if the saw band stretching.

1. Lift the saw frame to the top position. Stop the saw frame in top position by control valve.

2. Dismantle yellow protective cover of the saw band. The cover is clamped with two screws.

3. Open the cover of the arm.
4. Turn by stretching star to the left side, release saw band stretching and pull saw band from blade wheels.

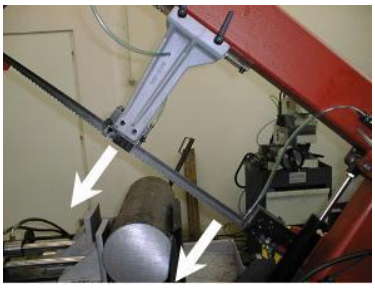

5. Pull up the saw band from the guiding cubes

4.2. Saw band instalation

During the installation, take care that you do not damage the limit switch if the saw band stretching!

1. Prior to installation, clean all track wheels, guide cubes and inner side of the arm thoroughly of all traces of chips and dirt. *Keep in mind the teeth direction when installing the saw band.*

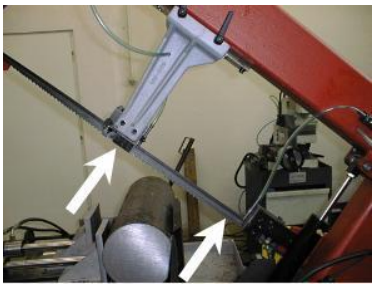

2. Insert new saw band in the guide cubes. Make sure the saw band runs between both guide rollers and it is pushed all the way to the top.

3. Put the saw band on both guide wheels. Make sure that the saw band ridge fits tightly to the wheel rim. Then push the saw band as far back as possible.
4. By turning the stretching star to the right, you will stretch the saw band slightly. Remove the plastic cover of the saw band teeth.
5. Close the cover of the arm.

6. Install the yellow protective cover of the band. The arrow on the cover must match the direction of the arrow on the band. If it does not, you must turn the band round.

4.3. Saw band stretching and inspection

Right saw band stretching is one of the most important criteria's, which influents accuracy and saw band service life. Stretch the saw bands according to the selected saw band and the band saw. Keep the recommendation of your manufacturer.

Pilový pás Sägeband Saw band	Napětí pilového pásu Sägebandspannung Blade tension	Napětí pilového pásu PSI (pro Tenzomat) Sägebandspannung PSI (für Tenzomat) Blade tension PSI (for Tenzomat)
20 x 0,9 mm	160 $N.mm^{-2}$	23 500
27 x 0,9 mm	180 $N.mm^{-2}$	26 500
34 x 1,1 mm	210 $N.mm^{-2}$	30 500
41 x 1,3 mm	240 $N.mm^{-2}$	35 000
54 x 1,3 mm	240 $N.mm^{-2}$	35 000
54 x 1,6 mm	280 $N.mm^{-2}$	40 600
67 x 1,6 mm	290 $N.mm^{-2}$	42 000
80 x 1,6 mm	300 $N.mm^{-2}$	43 500

4.3.1. Saw band stretching

- Switch on the hydraulic aggregate after the saw band installation check the saw band stretching on the Hydraulic blade tension indicator (optional accessories).

- Use the screw to stretch the saw band until it is stretched to the recommended value.

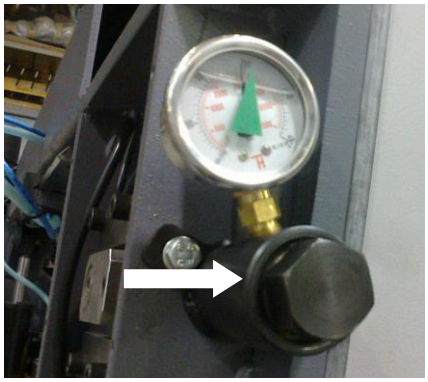

4.3.2. Saw band run adjustment on stretching wheel

Saw band run on the stretching wheel must be regularly inspected. The inspection has to follow every saw band replacement.

4.3.3. Saw band run inspection

If the run is not correct, the following problems may occur:

- The saw band falls from the wheels – The saw band and protective cover can be damaged.
- The saw band runs on the wheel rim – The saw band and wheel rim can be damaged

1. Start and stop saw band drive.
2. Stop the main switch!
3. Open rear cover of the saw frame.

4. Check saw band placing on the wheels.

- If the distance of the rear part of the saw band from wheel rim is 1 – 3 mm, setting is right.
- If the distance is bigger than 3 mm, or the saw band runs on the wheel rim, saw band run must be set.

4.3.4. Saw band setting

The saw band run is set with screw in the stretching cube on the saw frame. Optimal distance has been determined at **1 – 3 mm**.

- Turn by screw to the right, the saw band approximates to the stretching wheel rim.
- Turn by screw to the left, the saw band departs from the stretching wheel rim.

Check saw band run again after setting.

4.3.5. Adjusting of the limit switch of the saw band stretching

After the saw band is replaced, the saw band stretching must be checked. If the limit switch is not adjusted correctly, the band is stretched too little or too much.

- Tighten the saw band on the optimal value
- If the drive engine is switched on, but it is not running, turn with the screw clockwise, until the engine begins run..
- If the drive engine is possible switched on, turn with the screw anticlockwise, until the engine is stopped and then turn with the screw clockwise, until the engine begins run.

4.4. Cooling agents and chips disposal

The quality of the cooling agent will deteriorate due to:	If the solution is too weak:	If the solution is too strong:

• use of contaminated water • impurity • outside oil contamination (hydraulics, gears) • high operating temperatures • lack of air circulation • wrong concentration	• corrosion protection is diminished • lubrication decreases • microbial attack is more likely	• the cooling ability is decreased • foam behaviour increases • emulsions stability deteriorates • sticky residue develops

4.4.1. Coolant device inspection

The state of the cooling agent has significant influence on the cutting quality and on the operational life of the machine. Lifetime of the cooling liquid is 1 year, after this time we recommend change the cooling liquid. This time is dependent on the degree of pollution cooling liquid (especially with oils) and on the other factors.

Check level of the cooling liquid and function of the pump periodically!

> ***Note:***
> *If the state of the cooling liquid is not satisfactory, the cooling liquid must be changed.*

Check the state of the cooling agent according to the following table:

Testing	Interval	Method	Condition	Precaution
Liquid level	daily	visually	too low	after concentration check, refill with water or emulsion
Concentration	daily	refractometer densimeter	too high too low	refill water refill base emulsion
Smell	daily	by sense of smell	unpleasant smell	good ventilation, add biocides or renew coolant
Contamination	daily	by sense of smell	visible oil leaks, sludge fungi	surface cleaning, fix leaks, add biocides or fungicides, or coolant renewal after added system cleanser*
Corrosion-protection	when necessary	visually chip test Herbert-test	insufficient corrosion protection	test stability, if necessary – increase concentration or pH value
Stability	when necessary	refractometer	oiling	add concentrate, enquiries to supplier
Foam reaction	when necessary	shaking test	too much foam, foam disperses too slowly	avoid aeration, increase water hardness, ix with defoamer

* According to manufacturers' instructions

4.4.2. Chips disposal

Chips resulting from cutting operations must be disposed of in accordance with the relevant regulations.

- Let the chips drip excess fluid!.
- Fill a watertight container with the chips! Be careful that the container does not leak, because even after a long dripping time, they still contain coolant residue.
- *Place the container into the care of a disposal company equipped for the disposal of chips contaminated with cooling liquid.* In case the machine is equipped with micro-spray installation, the chips must also be handed over to a disposal company.

4.4.3. Gun cleaning machines from chip- optional accessories

Tool cleaning machines from chips after cutting.

With custom pump (min. capacity 16 l / min.) The coolant gets into the rinsing pistol with the trigger lever.

Sufficient pressure to the chips and debris were eliminated from the bearing surfaces of the base material and the saw.

Gun cleaning machine from the chip is supplied with a sufficient supply hose for easy handling (diameter of 12/8 mm).

Package includes:.

1. Ergonomic handle allows easy handling of the gun during cleaning machine.

2. Brass adjustable nozzle allows for smooth width rinse stream.

3. Valve for setting maximum coolant flow

4. Also included is a convenient holder for postponement gun after useí

Suitable for machine brand Bomar

4.4.4. Halogen light working area -optional accessories

Light the working area of the machine with natural light and helps to facilitate cutting with a band saw. Proper lighting in your work area greatly enhances ergonomics machines

Thanks flexible arm halogen light can accurately adjust to the desired location.

Turn on and off light switch is made directly to the halogen light.

Design lighting unit meets IP54 - Protection against water jets.

Technical data halogen light :

Supply voltage	24 V
Lenght flexible arm	300 mm
average	Ø 5,5 mm
lenght	80 mm

Package includes: lighting unit, flexible arm, holder for attachment to the machine, transformer, wiring.

4.5. Hydraulic, Greases and oils

4.5.1. Gearbox oils

In gearboxes, oil is used for the whole lifetime of the gearbox. We recommend replacing of the filling oil in case of repair.

Attention:
When replacing, use oils recommended by BOMAR or oils, which has comparable parameters from the other manufacturers.
Do not forget, that mineral and synthetic oils must not be mixed!

Use oils with specification DIN 51517 in the gearboxes. Select the viscosity grade ISO VG according to the original oil fill.

Recommended oils and quantity according to the type of the band saw

Band saw	Gearbox oil	Capacity
Workline 510.350 GANC	Shell Tivela S 320	1,8 l
Swarf conveyor	Shell Tivela S 320	0,075 l

Comparative table of the gearbox oils

Manufacturer	Viscosity grade		
	ISO VG 100	ISO VG 220	ISO VG 320
BP	Energol GR-XP 100	Energol GR-XP 220	Energol GR-XP 320
Castrol	Alpha SP 100 Alpha MW 100	Alpha SP 220 Alpha MW 220	
Elf	Reductelf SP 100	Reductelf SP 220 Reductelf Synthese 220	Reductelf SP 320
Esso	Spartan EP 100	Spartan EP 220	Spartan EP 320
Mobil	Mobilgear 627	Mobilgear SHC 220 Mobilgear 630	Mobilgear 632
ÖMV		PG 220	
Paramo	PP 7	Paramo CLP 220	Paramo CLP 320
Shell	Shell Omala 100	Shell Omala 220 Shell Tivela S 220	Shell Omala 320 Shell Tivela S 320
Total	Carter EP 100	Carter EP 220	Carter EP 320

4.5.2. Lubricant greases

We recommend using lithium based saponified grease, class NGLI-2 for lubrication. Different greases are mixable, if their oil bases and consistence type are identical.

Comparative table of the lubricant greases:

Manufacturer	Type of the lubricant grease
BP	Energrease LS - EP
DEA	Paragon EP1
Esso	FETT EGL 3144
	Beacon EP 1
	Beacon EP 2
FINA	FINA LICAL M12
Klüber	Microlube GB0
	Staburags NBU8EP
	Isoflex Spezial
Optimol	Optimol Longtime PD 0, PD1, PD2
Shell Aseol AG	ASEOL Litea EP 806-077
Texaco	Multifak EP1

4.5.3. Lubrication

There are several placing on the machine, which are necessary to grease periodically. It secures the right function of the machine.

Lubrication place	Lubrication
	Band saw / the guiding cubes leading – grease with oil from both sides once a week.

4.5.4. Micronizer – mist lubrication 24V- optional accessories

Miconizer is a device used to create a lubricating oil mist in precise dose mixture of oil and air, which is then applied directly to the blade.

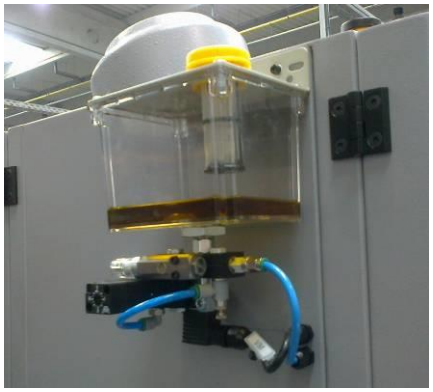

Ideal device for cooling and lubrication of the cutting blade closed profiles, which helps to maximize ease of cut.

Does not leak coolant when cutting profile material outside the working area sawmills.

Equipment adapted for all brand Bomar band saws.

Microniser setting is as follows:

1. For proper operation microniser pressure must be applied (dry, clean air free of particles) tires in the range of 0.5 to 0.5 MPa (5-6 bar) - arrow 1

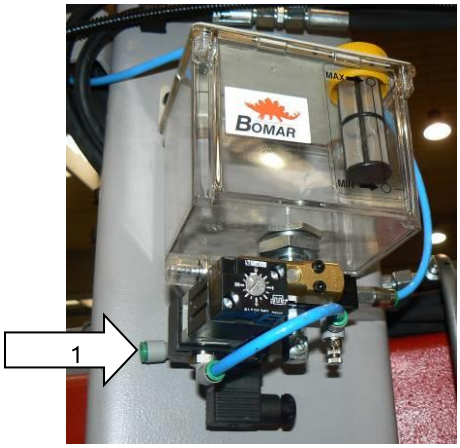

2. Arrow 2 - shows the output of the cooling medium (air + oil).

   Arrow 3 - shows the input for the power supply cable.

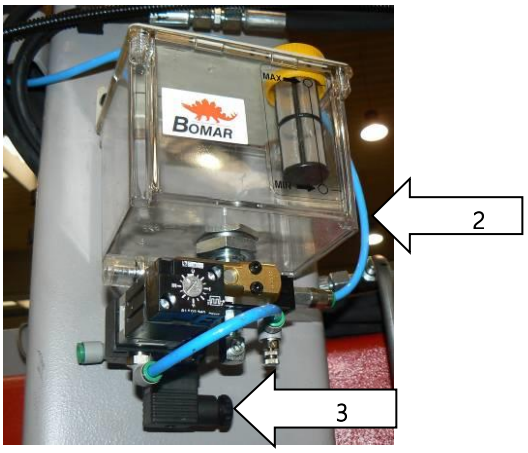

3. Microniser switch on / off is controlled dependent on machine

4. Set the microniser- arrow **4** the interval of cutting oil dispersion (3-20 pulses / min.). This interval adjust the parameters of the cutting strip and cut material

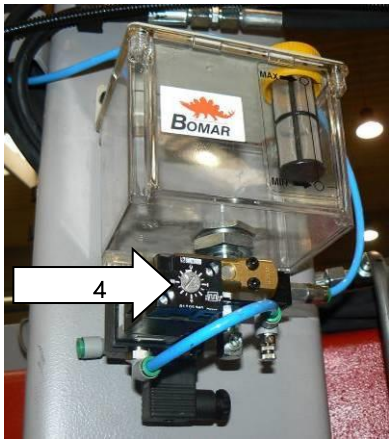

5. Adjust the amount of oil the regulator - arrow **5**

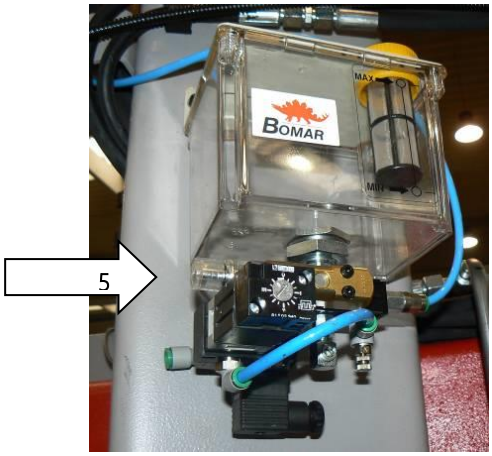

6. Setting the air quantity regulator make - arrow **6**

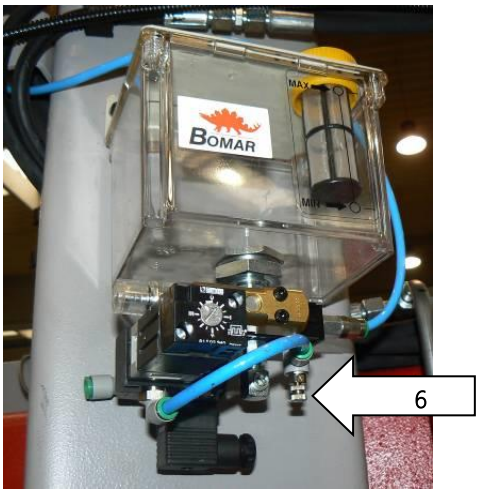

Recommended cutting oils for micronization:

Manufacturer	Cutting oil
Biona	Biocut
Paramo	Paramo cut 22

Featured are cutting oil with a viscosity 22.l

Add cleaning is possible after removing the filler cap. After completing a cap must be screwed again.

Package Includes: tank with regulators, connecting hose 6m, diffuser.

4.5.5. Hydraulic oils

Replace the hydraulic oil once in 2 years, because the oil can deteriorate its properties and cause problems the hydraulic equipment. If the hydraulic system is equipped with filter (2SF 56/48-0,063), replace the filter too.

Note:
When replacing, use oils recommended by BOMAR or oils, which has comparable parameters from the other manufacturers. Do not forget, that mineral and synthetic oils may not be mixed!

Use oils with specification DIN 51524-HLP, ISO 6743-4 and viscosity grade ISO VG 32 in hydraulic aggregates. Hydraulic oils quantity – see chapter Hydraulic oil level check.

Comparative table of the hydraulic oils

Manufacturer	Type	Manufacturer	Type
Agip	Oso 32	Ina	Hidraol 32 HD
Aral	Vitam GF 32	Klüber	Lamora HLP 32
Avia	Avilub RSL 32	Hungary	Hidrokomol P 32
Benzina	OH-HM 32	Mobil	Mobil DTE 25
BP	Energol HLP 32	ÖMV	HLP 32
Bulgaria	MX-M/32	Poland	Hydrol 30
Castrol	Hyspin AWS 32	Rumania	H 32 EP
Čepro	Mogul HM 32	Russia	IGP 30
DEA	Astron HLP 4hy6	Shell	Tellus Oil 32
Elf	Elfolna 32	Sun	Sunvis 846 WR
Esso	Nuto H 32	Texaco	Rando HD B 32
Fam	HD 5040	Valvoline	Ultramax AW 32
Fina	Hydran 32		

4.5.6. Regulation of clamping pressure

The hydraulic pressure device for pressure setting on the main vice and feed vise.

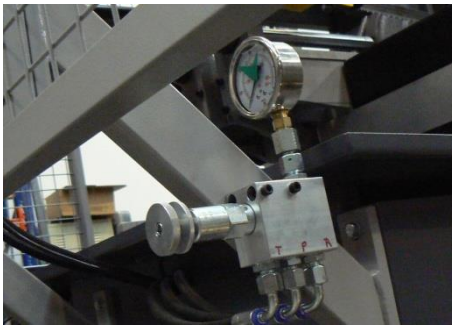

Warning !
*Because the hydraulic pressure equipment pressure **2,2 – 4** MPa, loosen the screws with caution!*

Settings:

1. First Release the pressure regulator valve

2. Adjust the pressure using the pressure relief valve and manometer

- When turning the pressure valve *clockwise the pressure increases*.
- When turning the pressure valve *counterclockwise lowers the pressure*.

3. Once you have set the desired pressure, pull the lock nut

Hydraulic pressure equipment is not needed to maintain.

4.5.7. Hydraulic unit service

After 50 hours working time, or the latest 3 month after the first run, the first service should be carried out. This includes:

- checking off all screws and connections, fixing points, tubes and hoses for leakage
- Cheb hydraulic oil level
- During time of duty the oil temperature shouldn´t exceed 60-70°C
- check function of signaling components (thermometer, level gauge, dirty filter indicator)
- Check the adjustment of working pressure

To realise a high reliability of the power pack, the manufacturer lays down following inspection intervals

Interval	daily	weekly	monthly	three monthly	six monthly	annually
Hydraulic fluid						
Level	-	•	-	-	-	-
Temperature	-	•	-	-	-	-
Condition	-	-	•	-	-	-
Change interval	-	-	-	-	-	•
Filter						
Change interval	-	-	-	-	-	-
Other checks						
External Leakages	•	-	-	-	-	-
Contamination	•	-	-	-	-	-
Damages	•	•	-	-	-	-
Noise-(level)	•	-	-	-	-	-
Gauges	-	-	•	-	-	-

4.6. Machine cleaning

Clean the machine from the cooling liquid and impurities after every shift stopping. Conserve the guiding surfaces, mainly.

- Clamping jaws guiding of the vice.
- The guiding of the feeder.
- Loading surface of the vice.

4.7. Worn pieces replacement

4.7.1. Hard metal guides replacement

If the hard metal guides cannot be adjusted, they have to be replaced.

1. Dismantle the saw band. Remove the hosepipe leading the cooling agent. Dismantle guide cube of the saw band.

2. Loosen the adjusting screws of the metal guide.

3. Loosen the binding screw of first metal guide. Remove adjustable hard metal guide.

4. Loosen the binding screw of second metal guide. Remove the hard metal guide
5. Insert new hard metal guides and fasten them tightly.
6. Mount the saw band. Adjust the hard metal guides.

4.7.2. Round brush replacement

If the chip removing brush is so worn, that it does not fulfil its function, the brush must be replaced.

1. Release the nut of the brush, exchange old brush to new brush and screw on the nut of the brush.
2. Set the brush to the saw band.

4.7.3. Saw band guiding rollers replacement

ATTENTION!
Guiding pulleys must be replaced together on both guiding cubes!!

If the saw band is not sufficiently guided by guiding pulleys or if the pulleys are obviously worn, the pulleys should be replaced.

1. Dismantle the saw band.

2. Disconnect the hose from the cooling agent, screw off the pressure regulation. Let the pressure regulation connected to the hydraulic system. Dismantle the guiding cube of the saw band..

ATTENTION!
Mark both eccentrics placing and components on the eccentric! Eccentrics must not be replaced with each other!!

3. Tighten the guiding cube to the vice and dismantle both eccentrics with bearings following way.
4. Screw off nuts from eccentrics..

5. Remove eccentrics from bearings by means of the swager

6. Change all bearings and other worn parts.

7. Install eccentrics to the cubes. Install components on both eccentrics in given

ATTENTION!
Do not replace the eccentrics placing in the cube

order. Put bearings by means of the preparation on eccentrics.

8. Screw on nuts on both eccentrics and tighten them.

9. Insert the saw band to the guiding cube (ca. 15 – 20 cm). Set the eccentrics by means of the wrenches, the saw band must run in the centre. Guide pulleys must not press too much on the band, but must spin freely during the band run.
10. Tighten nuts on both eccentrics.
11. Remove the testing piece of saw band from the cube lead. Install the guiding cube on the machine and connect the pressure regulation to the cut and cooling. Install the saw band.

4.7.4. Stretching wheel replacement

1. Dismantle the saw band.

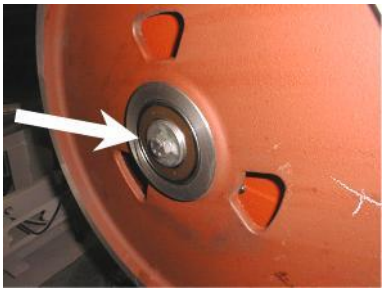

2. Screw off the screw and take down the washer.

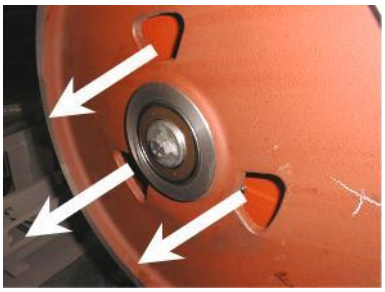

3. Pull off the wheel from the shaft by means of the three-armed puller. If bearing stayed on the shaft, pull off it too
4. Check score of the bearings of the stretching wheel and replace them for new.

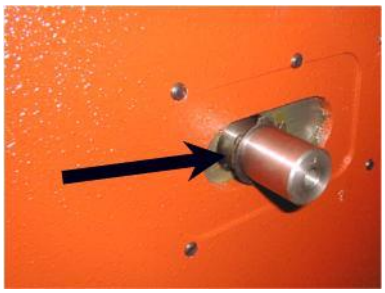

5. Clean the shaft and grease it with oil. Insert retaining ring to the groove.

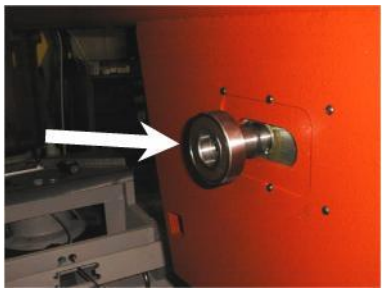

6. Install bearing on the shaft and move it to the retaining ring. Insert the distance ring on the shaft and move it to the bearing.

7. Insert the retaining ring to the hole in the wheel.

8. Insert the bearing to the hole in the wheel and press it to the retaining ring.

9. Put the wheel on the shaft and screw on the preparation to the wheel stretching to the hole in the shaft.

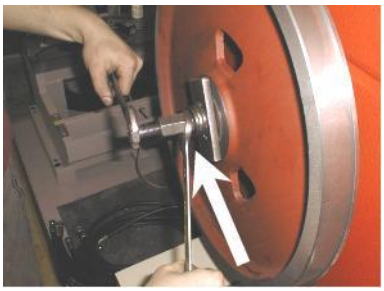

10. Pull on the wheel on the shaft.

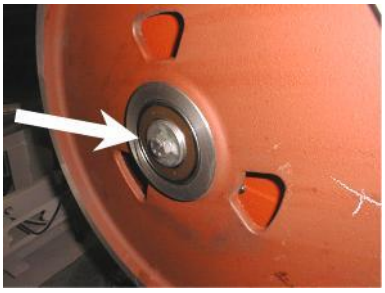

11. Screw on washer and screw back..
12. Install the saw band. Wheel replacement is ready.

4.7.5. Driving wheel replacement

1. Dismantle the saw band

2. Screw off the screw and remove the washer.

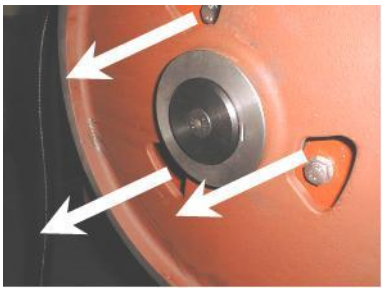

3. Pull off the wheel from the shaft by means of the three-armed puller.

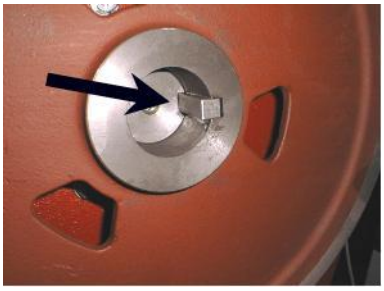

4. Install the wheel on the shaft. Insert the feather to the groove.

5. Screw on the preparation to the wheel stretching to the hole in the shaft. Pull on the wheel on the shaft.

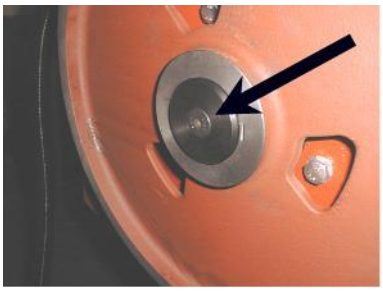

6. Screw on washer and screw back.
7. Install the saw band. Wheel replacement is ready.

4.7.6. Replacing the coolant pump

Only a qualified worker can carry out the connection!

High-voltage shock may have fatal results

1. Pull the tank with the liquid from the pedestal..
2. Remove the hosepipe leading to the cooling agent from the plug on the pump. Screw off four screws from the cooling pump flange and pull out the pump from the sheet metal holder.

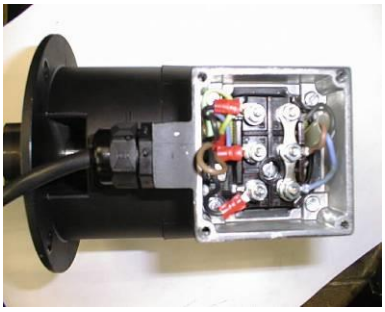

3. Remove the cover of the pump terminal switchboard. Disconnect 4 terminal connectors of the input cables. Cables are identified according to the red clamps..

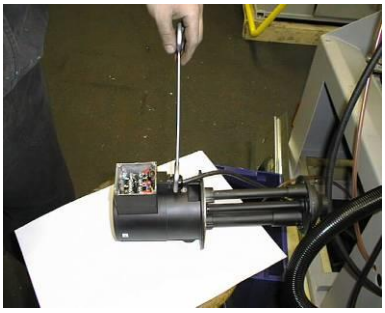

4. Loosen the bushing and pull the cable out from the pump.

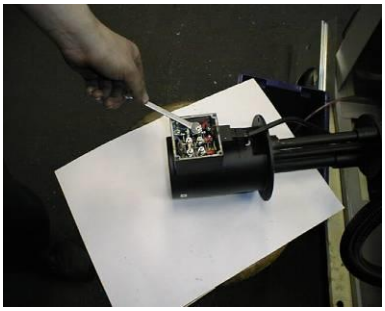

5. Dismantle new pump switchboard cover. Push the cable through the bushing and fasten it.

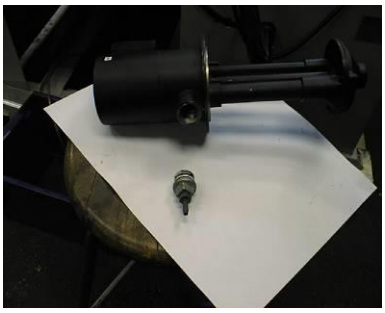

6. Screw on the cable bushing and cover of the terminal block. Do not forget the rubber gasket! Tighten the cooling liquid hose with non-stick tape and screw it again. Install cooling liquid hose, place the pump on the sheet metal holder and screw it

5. Troubleshooting

5.1. Mechanical problems

Problem	Possible causes	Repair
1. Slanting cut	- Wrongly adjusted hard metal guides.	Set according to the chapter „Servicing and adjustment“
	- Worn hard metal guides.	Replace to the chapter „Worn pieces replacement“
	- Wrongly adjusted cubes of the saw band guiding.	Set according to the chapter „Servicing and adjustment“
	- Worn bearings of the saw band guiding.	Replace according to the chapter „Worn pieces replacement“
	- Wrongly adjusted swarf brush.	Set according to the chapter „Servicing and adjustment“
	- Worn swarf brush.	Replace according to the chapter „Worn pieces replacement“
	- Insufficient saw band stretching.	Rise the saw band stretching and set the limit switch.
	- Wrongly chosen tooth system of the saw band.	Replace the saw band and keep the instructions of manufacturer on new saw band choice.
	- Worn saw band.	Replace the saw band.
	- Wrongly balanced roller conveyor.	Set the roller conveyor.
	- Dirty feeding board.	Cleanse the feeding board from debris, chip and residue material.
	- Guiding arm and guiding cube are loosened.	Clamp the guiding arm.
	- Guiding arm and cube are too far from the material.	Set the guiding cube to the material.
	- Too fast cutting rate.	Lower the material feeding speed.
	- Unexpected oscillation in material quality.	Set the cut and feeding speed to the relevant material.
2. The cut is not cut upon desired angle	- Securing lever is loosened.	Check the securing lever efficiency and carry out its adjustment according to chapter „Servicing and adjustment“.
	- Set angle does not match the cut angle.	Check the angle adjustment with a protractor and possibly set it according to chapter „Servicing and adjustment“.
	- Insufficient saw band stretching.	Stretch the saw band and set the limit switch according to chapter „Servicing and adjustment“.
	- Guiding arm and guiding cube are loosened.	Fasten the guiding arm and the cube.
	- Dirt between material and clamping jaw.	Cleanse the material and mating jaw.
3. Short lifetime of the saw band	- Insufficient saw band stretching.	Raise the tightening of the saw band set the scanner of saw band tightening according to chapter „Servicing and adjustment“.
	- Worn swarf brush.	Check the swarf brush condition and replace it in case of excessive use as described in chapter „Worn pieces replacement“

Problem	Possible causes	Repair
	- Wrongly adjusted swarf brush.	Check swarf brush adjustment, set it according to chapter „Servicing and adjustment"
	- Over stretched saw band	Lower stretching of the saw band and set the limit switch of the saw band stretching according to chapter „Servicing and adjustment"
	- Wrongly adjusted hard metal guides.	Check the adjustment of the hard metal guides and carry out adjustment as described in chapter „Servicing and adjustment"
	- Worn hard metal guides of the saw band.	Check the condition of the hard metal guide and if it is too worn, replace hard metal guides according to chapter „Worn pieces replacement"
	- Worn saw band guide bearings.	Check guiding bearings and if you notice some sort of excessive damage, replace them according to chapter„Worn pieces replacement"
	- Wrongly adjusted guiding cubes of the saw band.	Set guiding cube according to chapter „Servicing and adjustment"
	- Wrongly adjusted down feed and saw band speed.	Adjust the feeding and speed of a saw band according to values published by saw band manufacturer.
	- Different material quality.	Adjust feeding and speed of a saw band according to desired material (try cut-test).
	- Low-class saw band	Replace the saw band (contact your local accessory supplier for more information)
	- Wrongly chosen saw band tooth system.	Replace the saw band and keep instructions of the manufacturer on the choice.
	- Wrongly adjusted tracking.	Check the space between top of a saw band and driving wheel. Perhaps adjust the tracking as described in chapter „Servicing and adjustment"
4. Insufficient cut output.	- Worn saw band.	Replace the saw band and keep instructions of the manufacturer on the choice.
	- Wrong saw band tooth system.	Replace the saw band and keep instructions of the manufacturer on the choice.
	- Wrongly set down feed and speed of a saw band.	Set feed and speed of a saw band according to values published by saw band manufacturer.
5. The cut is not finished.	- Wrongly adjusted lower stop point of the saw frame.	Check lower limit switch and screw.
	- Stop point surface is messed-up.	Cleanse stop point surface of the limit switch from debris and residue material.
6. By choke is not possible turn	- Metal clamps between valve and panel.	Clamps must be removed and put on the shaft O-Ring about 10x2 mm.
	- Metal clams are in body of valve.	Valve must be cleared or changed.
7. Saw band drive cannot be started.	- Pressure switch is adjusted wrong.	Set the pressure switch according to chapter „Servicing and adjustment"
	- Pressure switch is defective.	Replace defective parts of the pressure switch.
8. The saw bands are cracked.	- In stretching wheel is wrong adjusting geometry.	Adjust distance band from recess wheel c.2 mm according to operating instructions.
	- Hard metal plates of circuit saw band are not adjusting.	Hard metal plates of circuit saw band must be adjusting according to operating instructions.

Problem	Possible causes	Repair
	- Guiding cubes are not adjusting (bearings + hard metal circuit)	Guiding cubes must be adjusting (bearings + hard metal circuit) according to operating instructions.
	- Bearings of guiding cubes are used (rolling elements are damaged or outside ring of bearing has conical form).	Bearings of guiding cubes must be replaced. Bearings must be adjusting according to operating instructions.
9. Damage tooth system of the saw band	- In gripping the lifting cylinder is backlash.	
	- Squeezed pin upper or downer holder of the lifting cylinder.	Exchange complete upper or downer holder of lifting cylinder.
10. The saw is cut downing.	- Geometry of hardmetal guiding cubes is wrong adjusted.	Hardmetal guiding cubes must be adjusted.
	- Bearings of guiding cubes are used.	Bearings of guiding cubes must be replaced.
11. Cleansing of the saw band is not functional.	- Elastic wheel of the brush drive is worn-down.	Elastic wheel of the brush must be changed.
	- Knurling of the driving wheel is worn-down.	Driving wheel must be changed.
	- The shaft of the brush drive is rusted.	The shaft of the brush must be cleaned and oiled.
	- The brush position and the brush cover is adjusted wrong – with the brush cannot be turned.	The brush cover must be posed, in order to the brush can be turned.
12. The saw arm periodically rise and fall during the cut; this cause short lifetime of the saw band.	- Backslash in driving wheel lodgement on the shaft.	Change the driving shaft for a long one, new bearings, distance ring, new driving wheel, spring, two covers on the forehead of the shaft + screws.
	- Worn channel for spring.	

5.2. Electric problems

Problem	Possible causes	Repair
1. Machine is not possible start.	- In socket is not voltage	Line voltage must be checked.
	- Transfer relay is closed (thermal protector)	Each FA relay must be checked.
	- Limit switch of saw band stretching, cover of frame or cover of saw band is not started.	Check of saw band stretching and covers closing.
2. When cut is finished, the frame is not raising.	- Bottom limit switch is adjusted wrong.	Bottom limit switch must be adjusted according to chapter ADJUSTING.
	- In hydraulic (pneumatic) ring is error. HYTOS (BOSCH) is not acting to frame uplift.	Function of magnetic valve must be checked, valve must be closed, voltage of clamps and inductor must be checked.
3. Electric motor and pump are without voltage. Between contactor and thermal protector is	- Wrong contactor.	Replace contactor of engine.

Problem	Possible causes	Repair
not voltage.		
4. The indicator of speed saw band is not functional.	- Sensor of speed is not adjusted.	Sensor of speed must be adjusted.
	- Defective display	The display must be changed.
	- Wrong sensor – diode of indicator speed is not light.	Sensor must be changed and adjusted.
5. Protector is switched off from engine hydraulic aggregate MA3 sometimes.	- Into hydraulic system is high working pressure.	Service engineer must reduce the pressure in hydraulic system.
6. The hydraulic aggregate cannot be started	Auxiliary contact on thermo-relay FA1 is defective.	Replace the defective contact on motor starter FA1.
7. Hydraulic aggregate is switched on but the saw arm or the main vice is not functional	- Wrong connection of electrical supply. The electrical phases are connected conversely.	The phases must be switched. Only service engineer can do this.
8. Cooling is not active	Lack of cooling agent.	Fill the tank with cooling agent.
	- Thermal relay is defective	Change the thermal relay
	- Input hosepipe is broken or obstructed.	Check the cooling circuit and perhaps cleanse cooling system.
	- Cooling pump protection is defective	Check the protection of cooling pump if need change it.
	- Cooling pump is defective.	Replace the cooling pump.

5.3. Hydraulic problems

Problem	Possible causes	Repair
1. Hydrogenerator not supplying oil	• reverse rotation	Check the connections of each phase. Reconnect properly connection of the electrical phases.
	• shortage of oil in the tank	Add hydraulic oil
	• Oil viscosity does not correspond prescribed viscosity value	Change hydraulic oil.
	• Hydrogenerator malfunction	Call service
	• Wrong power supply connection.	Check the connections of each phase. Reconnect properly connection of the electrical phases.
2. Hydraulic oil contains bubbles	• Hydraulic circuit is not adequately deaerated	Make deaeration of hydraulic circuit.
	• Low oil level	Add hydraulic oil

	•	the pump shaft seals damaged	Call service
3. Increased mechanical noise	•	damaged joint drive	Call service
	•	damaged or destroyed motor bearings	Call service
	•	air intake	Check for leaks.
4. Low pressure, pump supplies oil	•	problem in the safety valve	Wrong settings. Check the settings and adjust the safety valve.
	•	pump wear	Call service
	•	external or internal leakage	Call service
5. Hydrogenerator is seized	•	damage by solid particles in oil	Make oil filtration, or call the service.
	•	non-prescribed oil	Change hydraulic oil.
	•	wrong type of oil	Change hydraulic oil.
	•	exceeding the life of the pump	Call service
6. Overheating oil	•	cooler malfunction	Check the cooler function or call service.
	•	wear the pump, the energy is converted into heat	Call service
7. Hydraulic valve can not be readjusted	•	electromagnet has no signal (voltage) - interrupted supply lines	Check again.
	•	Electromagnet coil burnt	Replace coil – Call service.
	•	spool valve sticking	Replace valve – Call service

Note:

Frequency Inverter
Do install the bandsaw machine at electrical Installation that corresponds recommended technical standards. We recommend to protect the machine using current protectores by characteristics U, able to compansate interchanges of rising current which escapes fromfilter of Frequency Inverter, so that additionalequipments to the machine will not be required than. We don't reccomend to protect a machine by a standard protector current, equipped by a smaller type under 100 mA. Standard used is 30 mA because of currnet escape in accordance of Frequency Inverters fitted on machine. Alternative soulutionshould be used currentprotector (FI) by sensitivity of 100 mA.

6. Schematics

6.1. Elektrické schema /
Elektroschema /
Electric scheme – 3×400 V, PE+N, 50 Hz

Obsah/ Table of contents/ Inhaltsverzeichnis

Stránka/Page/Seite	Název stránky/Name page/Name Seite	Datum/Date/Datum /Date
00	Úvodní strana/Start page/Startseite	14.1.2014
01	Obsah/ Table of contents/ Inhaltsverzeichnis	14.1.2014
02	Rozmístění prvků v rozvaděči RS1/ Placement of elements in enclosure RS1/ Platzierung der Elemente im Schaltschrank RS1	14.1.2014
03	Ovládací panel OP1/Control panel OP1/Bedienpult OP1	14.1.2014
04	Kusovník artiklů/ Parts list/ Artikelstückliste	14.1.2014
04.a	Kusovník artiklů/ Parts list/ Artikelstückliste	14.1.2014
04.b	Kusovník artiklů/ Parts list/ Artikelstückliste	14.1.2014
05	Silová část M1,M2/Power part M1,M2/Feld partie M1,M2	14.1.2014
05.a	Silová část M3/Power part M3/Feld partie M3	14.1.2014
06	Deska zdroje/Power board/Netzgerat-Platte	14.1.2014
07	Stykače motorů, M4/Motor contactor, M4/Motor-Schutzschalter, M4	14.1.2014
08	Hydraulické ventily/Hydraulic valve/Hydroventil	14.1.2014
08.a	Hydraulické ventily/Hydraulic valve/Hydroventil	14.1.2014
09	Vstupy/Inputs/Eingänge	14.1.2014
10	Tlačítka ovládací panel OP1/ Button control panel OP1/ Taste Bedienpult OP1	14.1.2014
11	Bezpečnostní okruh/Safety circle/Sicherheitsbereich	14.1.2014
12	Řidicí systém/ Control system/ Steuersystem	14.1.2014
13	Příslušenství/Accessories/Zubehör	14.1.2014
14	Zapojení snímačů/Conection of sensors/Sensoranschluss	14.1.2014

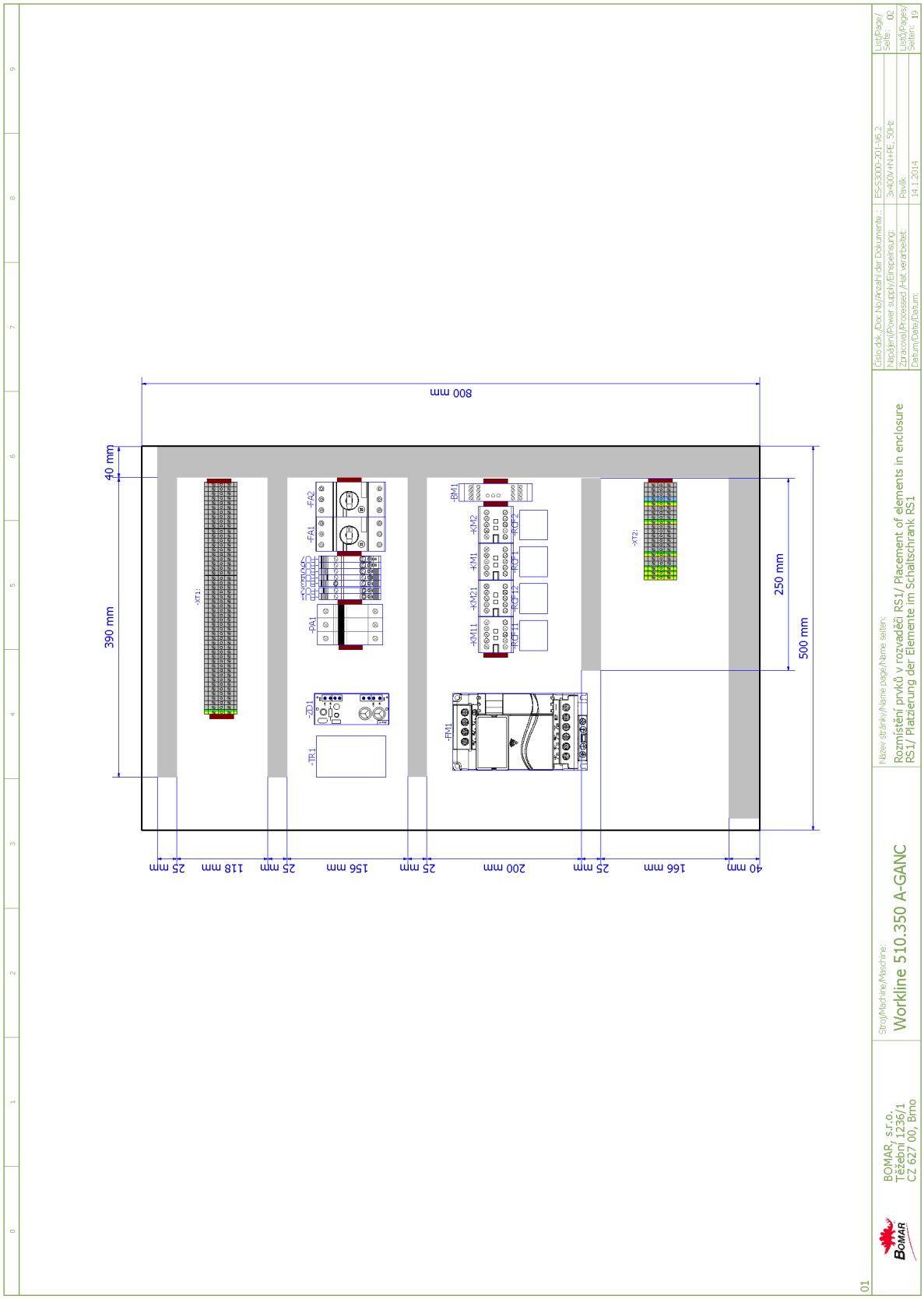
800 mm
40 mm
390 mm
250 mm
500 mm
25 mm
118 mm
25 mm
156 mm
25 mm
200 mm
25 mm
166 mm
40 mm
-XT1:
-FA2
-FA1
-PA1
-ZD1
-TR1
-BM1
-KM2
-KM1
-KM21
-KM11
-RQF2
-RQF1
-RQF12
-RQF11
-PM1
-XT2:
01
BOMAR, s.r.o.
Těžební 1236/1
CZ 627 00, Brno
Stroj/Machine/Maschine:
Workline 510.350 A-GANC
Název stránky/Name page/Name seiten:
Rozmístění prvků v rozvaděči RS1/ Placement of elements in enclosure RS1/ Platzierung der Elemente im Schaltschrank RS1
Číslo dok./Doc.No/Anzahl der Dokumente:
ES-S300-201-V6.2
List/Page/Seite: 02
Napájení/Power supply/Einspeisung:
3x400V+N+PE, 50Hz
List/Pages/Seiten: 19
Zpracoval/Processed /Hat verarbeitet:
Pavlík
Datum/Date/Datum:
14.1.2014

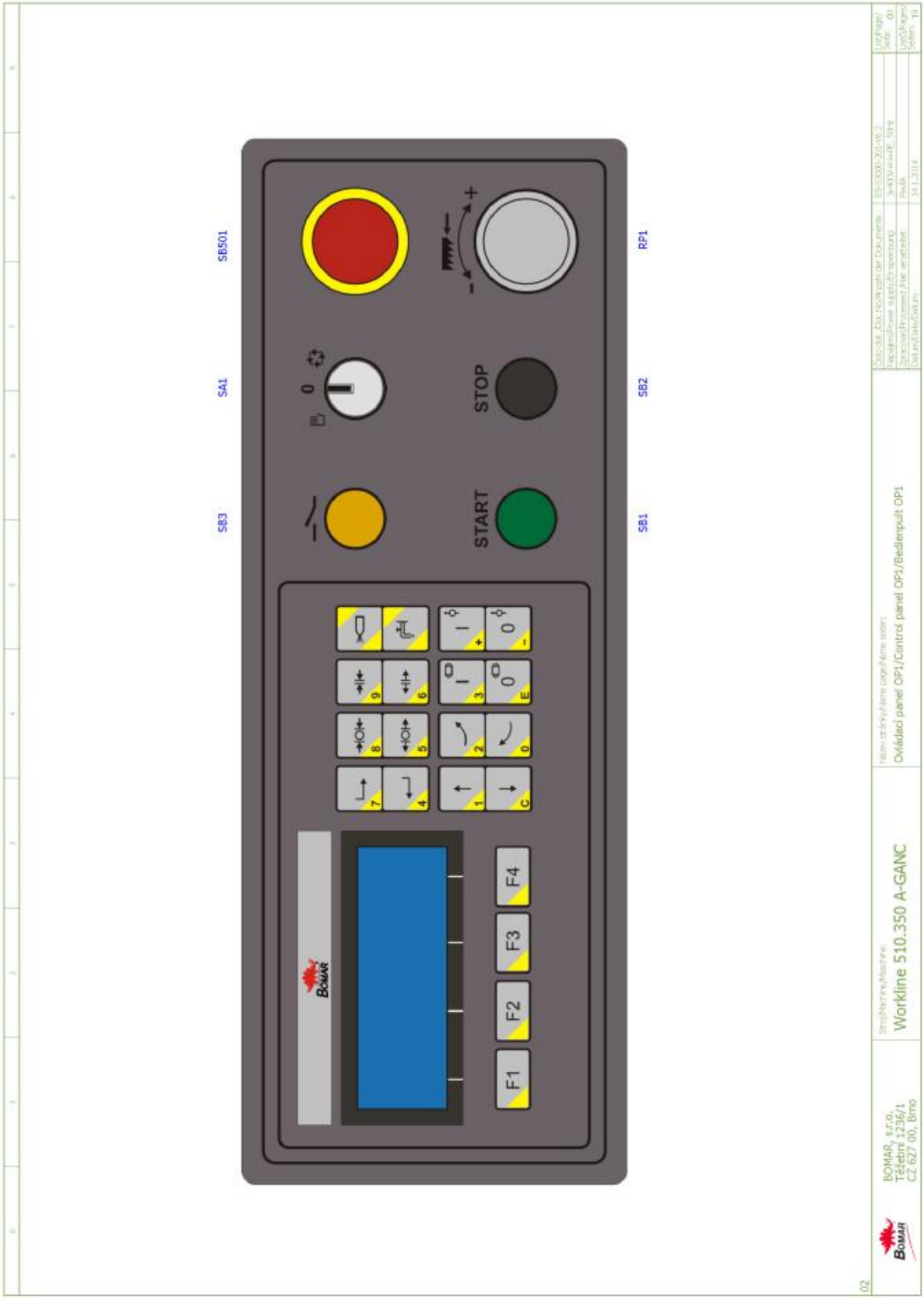
SB501
SA1
SB3
RP1
SB2
SB1
STOP
START
F1
F2
F3
F4
BOMAR
Workline 510.350 A-GANC
Ovládací panel OP1/Control panel OP1/Bedienpult OP1
BOMAR, s.r.o.
Těšínská 1236/1
CZ 627 00, Brno

Parts list

Device identification	Device description	Type number	Manufacturer	Part number	Quantity	Location (page.column)
-ZD1	Power supply unit - 15VAC/24VDC; 20VAC/28VDC	ZDR-03	Bomar	265.915	1	/06.3
-CU1	Touch-sensitive keyboard	31.R230-207	AKI ELECTRONIC,spol.s.r.o.	31.R230-207	1	/12.0
-FA1	Manual motor starter - 0.4A	MS116-0,4	ABB	91.045.017	1	/05.4
-FA2	Manual motor starter - 4A	MS116-4,0	ABB	91.045.022	1	/05.7
-HL1	Green light for Eaton adapter	M22-LED-G	EATON	91.061.023	1	/08.a.5
-HL2	White light for Eaton adapter	M22-LED-W	EATON	91.061.034	1	/11.7
-SB3	Yellow translucent switch head	M22-DL-Y	EATON	91.060.053	1	/11.3
=OP1-SB1	Green translucent switch head	M22-DL-G	EATON	91.060.031	1	/10.2
=OP1-SB3	Head of 3 positional switch	M22-WRK3	EATON	91.060.051	1	/10.4
-FU1	Tube fuse - 2A/250V, slow, 5x20	T2A/250V	ESKA	91.230.001	1	/06.1
-FU2	Tube fuse - 2A/250V, slow, 5x20	T2A/250V	ESKA	91.230.001	1	/06.1
-FU3	Tube fuse - 500mA/250V, slow, 5x20	T500mA/250V	ESKA	91.230.011	1	/06.5
-FU6	Tube fuse - 6,3A/250V, slow, 5x20	T6,3A/250V	ESKA	91.230.002	1	/06.5
-FU7	Tube fuse - 200mA/250V, slow, 5x20	T200mA/250V	ESKA	91.230.037	1	/13.1
-RP1	Potenciometr 4k7	TP195 4k7/N20A	GES-ELECTRONICS, a.s.	91.283.015	1	/05.a.5
-RP1	Potentiometer knob - 24mm	S8877 BLK	GES-ELECTRONICS, a.s.	91.060.063	1	/05.a.5
-RCF1	RCF filter	FBOPR1624	Ing. Miroslav Vlček	91.041.015	1	/05.3
-RCF2	RCF filter	FBOPR1624	Ing. Miroslav Vlček	91.041.015	1	/05.6
-RCF11	RCF filter	FBOPR1624	Ing. Miroslav Vlček	91.041.015	1	/05.a.0
-RCF12	RCF filter	FBOPR1624	Ing. Miroslav Vlček	91.041.015	1	/05.a.0
-BM1	Safety relay - 3xNO	CS AR-02M024	PIZZATO	91.051.034	1	/11.5
-FA1	Auxiliary Contact Block - 1xNO+1xNC	HKF1-11	ABB	91.046.002	1	/05.4
-FA2	Auxiliary Contact Block - 1xNO+1xNC	HKF1-11	ABB	91.046.002	1	/05.7
-FU1	Fuse terminal	WK4/THSi5U	WIELAND	91.251.102	1	/06.1
-FU2	Fuse terminal	WK4/THSi5U	WIELAND	91.251.102	1	/06.1
-FU3	Fuse terminal	WK4/THSi5U	WIELAND	91.251.102	1	/06.5
-FU4	Fuse terminal	WK4/THSi5U	WIELAND	91.251.102	1	/06.5
-FU4	Tube fuse - 800mA/250V, slow, 5x20	T800mA/250V	ESKA	91.230.010	1	/06.5

The manufacturer reserves right to use an equivalent replacement device.

03

BOMAR, s.r.o. Těžební 1236/1 CZ 627 00, Brno	Stroj/Machine/Maschine: Workline 510.350 A-GANC	Název stránky/Name page/Name seiten: Kusovník artiklů/ Parts list/ Artikelstückliste	Číslo dok./Doc.No/Anzahl der Dokumente.:	ES-S3000-201-V6.2	List/Page/Seite: 04
			Napájení/Power supply/Einspeisung:	3x400V+N+PE, 50Hz	Listů/Pages/Seiten: 19
			Zpracoval/Processed /Hat verarbeitet:	Pavlík	
			Datum/Date/Datum:	14.1.2014	

Parts list

Device identification	Device description	Type number	Manufacturer	Part number	Quantity	Location (page.column)
-FU5	Fuse terminal	WK4/THSi5U	WIELAND	91.251.102	1	/06.5
-FU5	Tube fuse - 1A/250V, slow, 5x20	T1A/250V	ESKA	91.230.031	1	/06.5
-FU6	Fuse terminal	WK4/THSi5U	WIELAND	91.251.102	1	/06.5
-KM1	Minicontactor - 4kW/400V, 3P	B6S-30-01-1.7-71	ABB	91.040.049	1	/07.1
-KM2	Minicontactor - 4kW/400V, 3P	B6S-30-01-1.7-71	ABB	91.040.049	1	/07.3
-KM11	Minicontactor - 4kW/400V, 3P	B6S-30-01-1.7-71	ABB	91.040.049	1	/11.7
-KM21	Minicontactor - 4kW/400V, 3P	B6S-30-01-1.7-71	ABB	91.040.049	1	/11.8
-PA1	Fuse switch disconnector E-90 - 3P	E 93/32	ABB	91.241.014	1	/05.a.1
-QS1	Disconnector - 3P, 16A	OT16FT3	ABB	91.170.018	1	/05.0
-QS1	Terminal shroud	OTS40T3	ABB	91.170.017	1	/05.0
-RP1	Fastconnect clamp	WAGO 224-112	WIELAND	91.250.009	3	/05.a.5
-SB3	NO contact for Eaton adapter	M22-K10	EATON	91.061.022	1	/11.3
-SB501	Emergency-stop mushroom push - button + 3xNC	YW1B-V4E02R	IDEC	91.060.084	1	/11.1
=OP1-SB1	Attaching adapter + 1NO	M22-AK10	EATON	91.061.021	1	/10.2
=OP1-SB2	Attaching adapter + 1NO	M22-AK10	EATON	91.061.021	1	/10.3
=OP1-SB2	Switch head - black	M22-D-S	EATON	91.060.035	1	/10.3
=OP1-SB3	NO contact for Eaton adapter	M22-K10	EATON	91.061.022	1	/10.4
=OP1-SB3	Attaching adapter + 1NO	M22-AK10	EATON	91.061.021	1	/10.4
-TR1	Toroidal transformer - 0-230-400V/20V/15V, 0.65-0.38A/6A/2A, 150VA	1502304002015	KARBAN s.r.o.	91.080.026	1	/06.1
-SQ8	Safety limit switch - 2xNC	QKS8	KEDU	91.173.012	1	/11.1
-PA1	Cylindric fuse - 12A, 10x38 fast, gG charakteristic	PV10 12A gG	OEZ	91.231.007	3	/05.a.1
-SQ3	Limit switch - 1NC+1NO, M20, slow	D4N-4A32	OMRON	91.173.010	1	/09.2
-SQ11	Limit switch - 1NC+1NO	D4N-4A31	OMRON	91.173.007	1	/09.8
-SQ4	Limit switcher - 2NC, roller on doors(right), M2, slow action	FR 34C1-M2	PIZZATO	91.173.021	1	/09.3
-SQ5	Limit switch - 1NO + 1NC, roller, M2, snap action	FR 605-M2	PIZZATO	91.173.009	1	/09.4
-LQ1.A	Sensor cable	MOD.14/4 M12 SL LC10	SICK	91.142.001	1	/09.5
-LQ1.B	Sensor cable	MOD.15/4 M12 SL LC10	SICK	91.142.002	1	/09.6
-QS1	Handle switch - black	OHBS2RJ	ABB	91.180.015	1	/05.0

The manufacturer reserves right to use an equivalent replacement device.

04

Parts list

Device identification	Device description	Type number	Manufacturer	Part number	Quantity	Location (page.column)
-CU1	Control circuit	PRO-5.X	Bomar	265.917	1	/12.0
-FM1	AC motor drive - 3.7kW, 3x400VAC	VFD037E43A	DELTA ELECTRONICS, INC.	91.012.094	1	/05.a.1
-FU7	Fuse terminal	WK4/THSi5U	WIELAND	91.251.102	1	/13.1
-M4	Fan 24VDC, 154CFM	RDH1238 B2	Xinruilian Electronic Co.	91.015.126	1	/05.a.8

The manufacturer reserves right to use an equivalent replacement device.

04.a

BOMAR, s.r.o. Těžební 1236/1 CZ 627 00, Brno	Stroj/Machine/Maschine: Workline 510.350 A-GANC	Název stránky/Name page/Name seiten: Kusovník artiklů/ Parts list/ Artikelstückliste	Číslo dok./Doc.No/Anzahl der Dokumente.: ES-S3000-201-V6.2 Napájení/Power supply/Einspeinsung: 3x400V+N+PE, 50Hz Zpracoval/Processed /Hat verarbeitet: Pavlík Datum/Date/Datum: 14.1.2014	List/Page/Seite: 04 b Listů/Pages/Seiten: 19

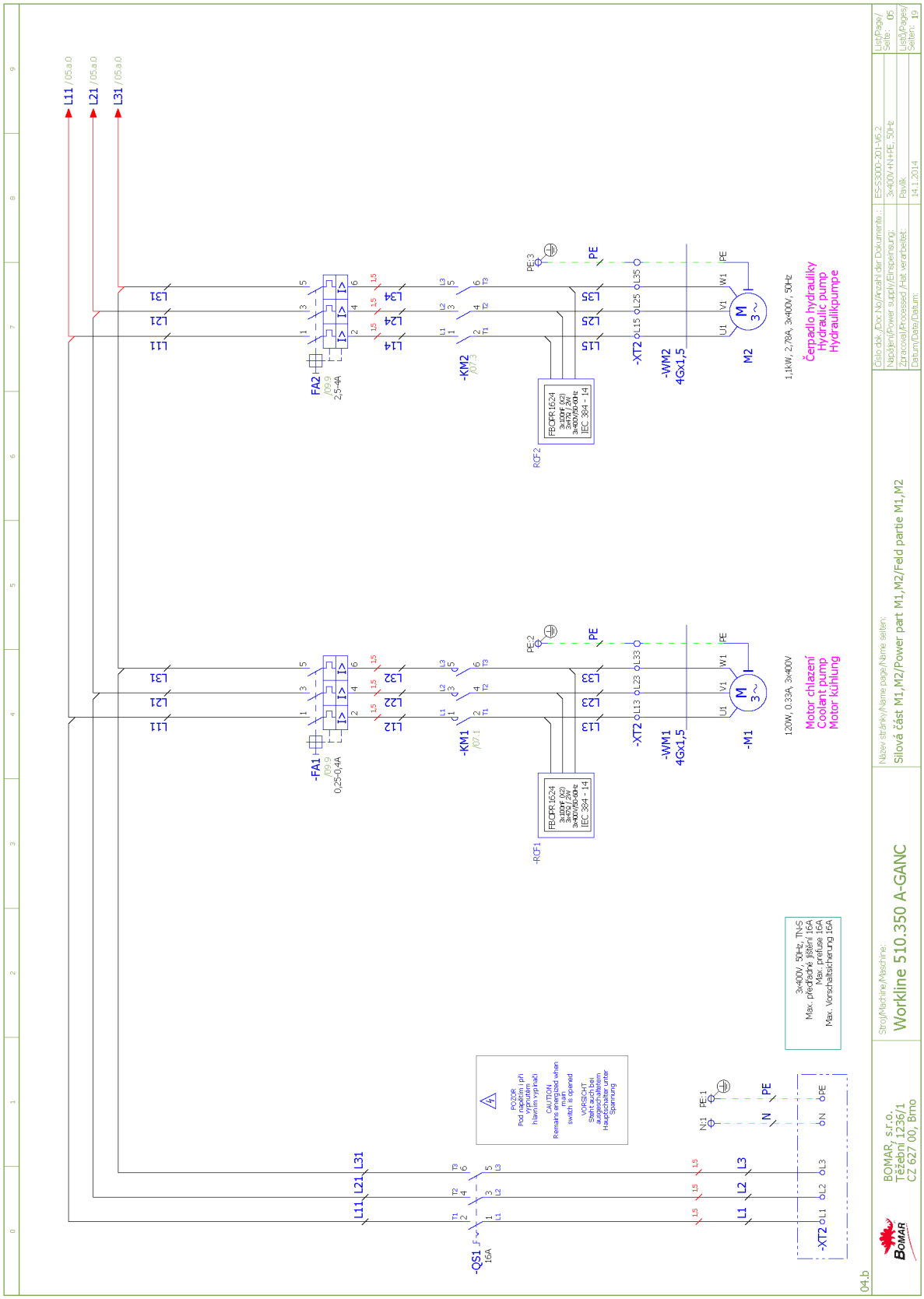
L11 / 05.a.0
L21 / 05.a.0
L31 / 05.a.0
-FA1
/09.9
0,25-0,4A
-FA2
/09.9
2,5-4A
-KM1
/07.1
-KM2
/07.5
-RCF1
-RCF2
FBCPR-1624
3x400V AC
3x400V/50-60Hz
IEC 384 - 14
-XT2
-WM1
4Gx1,5
-WM2
4Gx1,5
-M1
M2
120W, 0,33A, 3x400V
1,1kW, 2,79A, 3x400V, 50Hz
Motor chlazení
Coolant pump
Motor kühlung
Čerpadlo hydrauliky
Hydraulic pump
Hydraulikpumpe
-QS1
16A
POZOR
Pod napětím i při vypnutém hlavním vypínači
CAUTION
Remains energized when main switch is opened
VORSICHT
Steht auch bei ausgeschaltetem Hauptschalter unter Spannung
3x400V, 50Hz, TN-S
Max. předřazená jištění 16A
Max. prefuse 16A
Max. Vorschaltsicherung 16A
Stroj/Machine/Maschine:
Workline 510.350 A-GANC
Název stránky/Name page/Name seiten:
Silová část M1,M2/Power part M1,M2/Feld partie M1,M2
BOMAR, s.r.o.
Těžební 1236/1
CZ 627 00, Brno
ES-S3000-201-V6.2
3x400V+N+PE, 50Hz
Pavlík
14.1.2014
List/Page/Seite: 05
List(s)/Pages/Seiten: 19
04.b

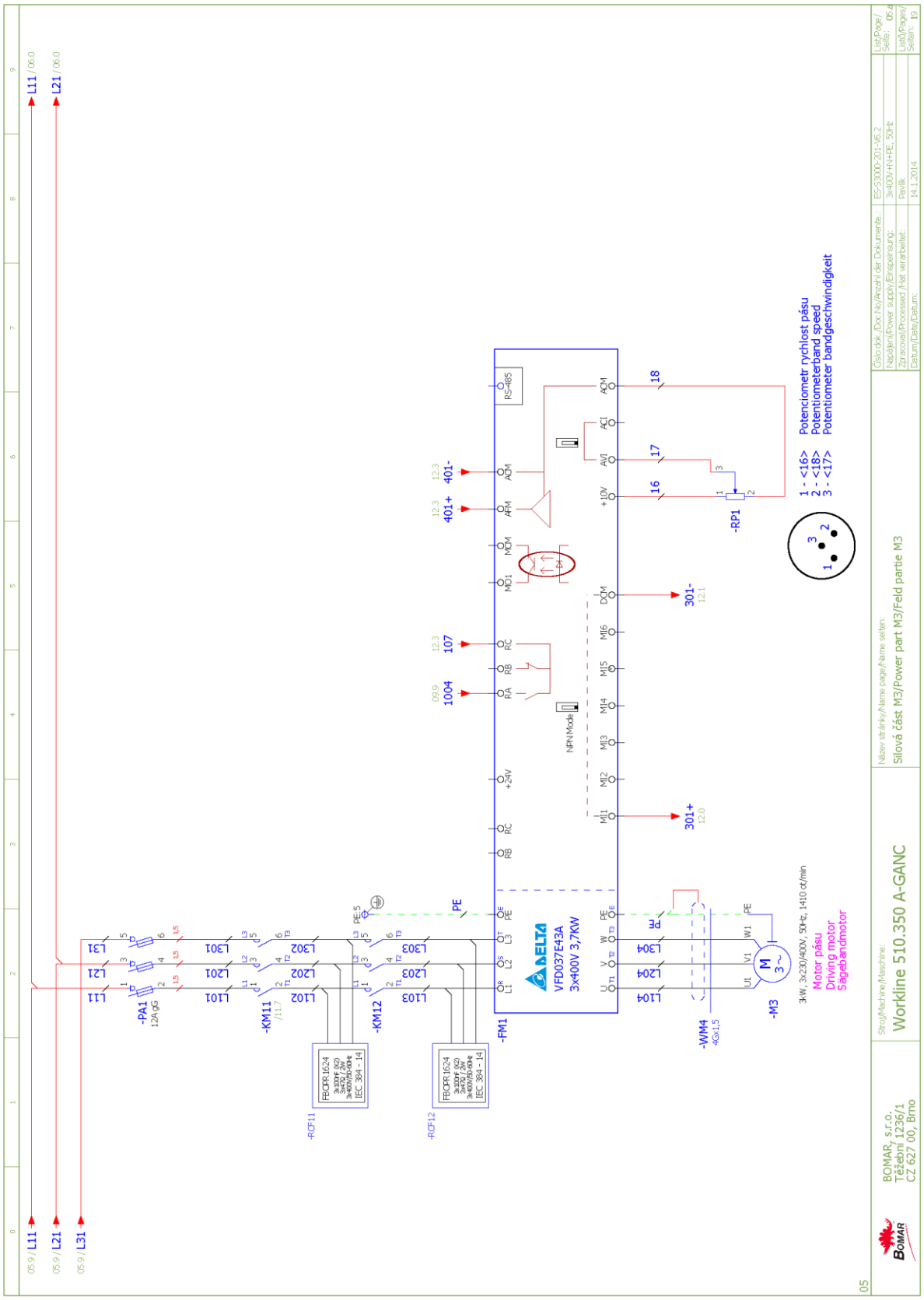
L11 / 06.0
L21 / 06.0
05.9 / L11
05.9 / L21
05.9 / L31
-PA1
12A gG
-KM11
-KM12
-RCF11
-RCF12
-FM1
DELTA
VFD037E43A
3x400V 3,7KW
NPN Mode
RS-485
401+
401-
1004
107
301+
12.0
301-
12.1
18
17
16
-RP1
1 - <16>
2 - <18>
3 - <17>
Potenciometr rychlost pásu
Potentiometerband speed
Potentiometer bandgeschwindigkeit
-WM4
4Gx1,5
-M3
3kW, 3x230/400V, 50Hz, 1410 ot/min
Motor pásu
Driving motor
Sägebandmotor
BOMAR, s.r.o.
Těžební 1236/1
CZ 627 00, Brno
Stroj/Machine/Maschine:
Workline 510.350 A-GANC
Název stránky/Name page/Name seiten:
Silová část M3/Power part M3/Feld partie M3
Číslo dok. /Doc.No/Anzahl der Dokumente:
ES-S300-201-V6.2
Napájení/Power supply/Einspeisung:
3x400/4N+PE, 50Hz
Zpracoval/Processed /Hat verarbeitet:
Pavlík
Datum/Date/Datum:
14.1.2014
List/Page/Seite: 05.4
List(s)/Pages/Seiten: 19
05

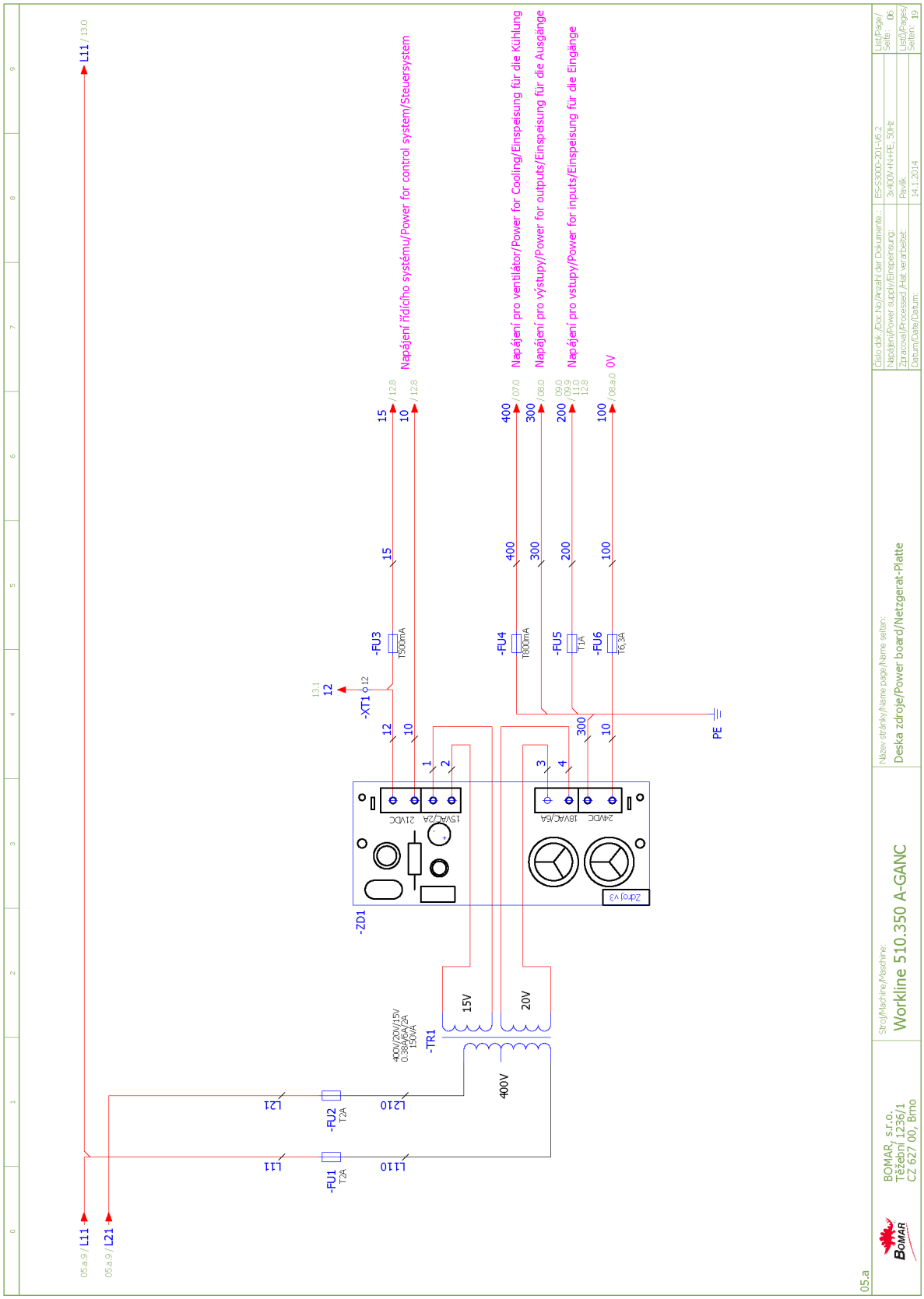
Napájení řídicího systému/Power for control system/Steuersystem
Napájení pro ventilátor/Power for Cooling/Einspeisung für die Kühlung
Napájení pro výstupy/Power for outputs/Einspeisung für die Ausgänge
Napájení pro vstupy/Power for inputs/Einspeisung für die Eingänge
0V
L11
L21
-FU1
-FU2
-TR1
-ZD1
-XT1
-FU3
-FU4
-FU5
-FU6
PE
400V
15V
20V
Zdroj v3
Stroj/Machine/Maschine:
Workline 510.350 A-GANC
Název stránky/Name page/Name seiten:
Deska zdroje/Power board/Netzgerat-Platte
BOMAR, s.r.o.
Těžební 1236/1
CZ 627 00, Brno
05.a

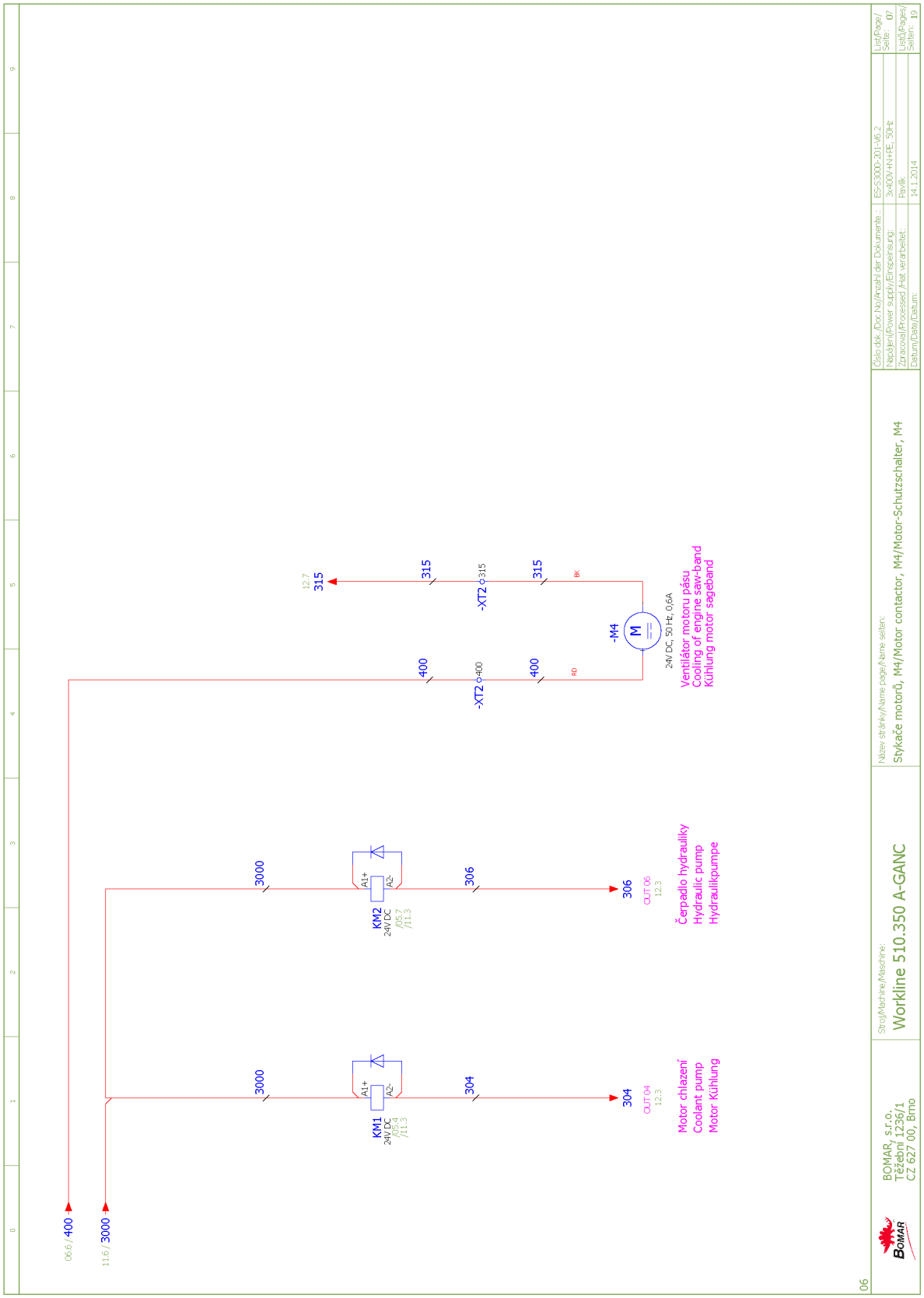
06.6 / 400
116 / 3000
3000
KM1
24V DC
/05.4
/11.3
A1+
A2-
304
OUT 04
12.3
Motor chlazení
Coolant pump
Motor Kühlung
3000
KM2
24V DC
/05.7
/11.3
A1+
A2-
306
OUT 06
12.3
Čerpadlo hydrauliky
Hydraulic pump
Hydraulikpumpe
12.7
315
315
-XT2
315
315
400
-XT2
400
400
-M4
M
24V DC, 50 Hz, 0,6A
Ventilátor motoru pásu
Cooling of engine saw-band
Kühlung motor segeband
BOMAR, s.r.o.
Těžební 1236/1
CZ 627 00, Brno
Stroj/Machine/Maschine:
Workline 510.350 A-GANC
Název stránky/Name page/Name seiten:
Stykače motorů, M4/Motor contactor, M4/Motor-Schutzschalter, M4
Číslo dok. /Doc.No./Anzahl der Dokumente:
ES-S300-201-V6.2
Napájení/Power supply/Einspeisung:
3x400V+N+PE, 50Hz
Zpracoval/Processed /Hat verarbeitet:
Pavlík
Datum/Date/Datum:
14.1.2014
List/Page/Seite: 07
List(s)/Pages/Seiten: 19
06

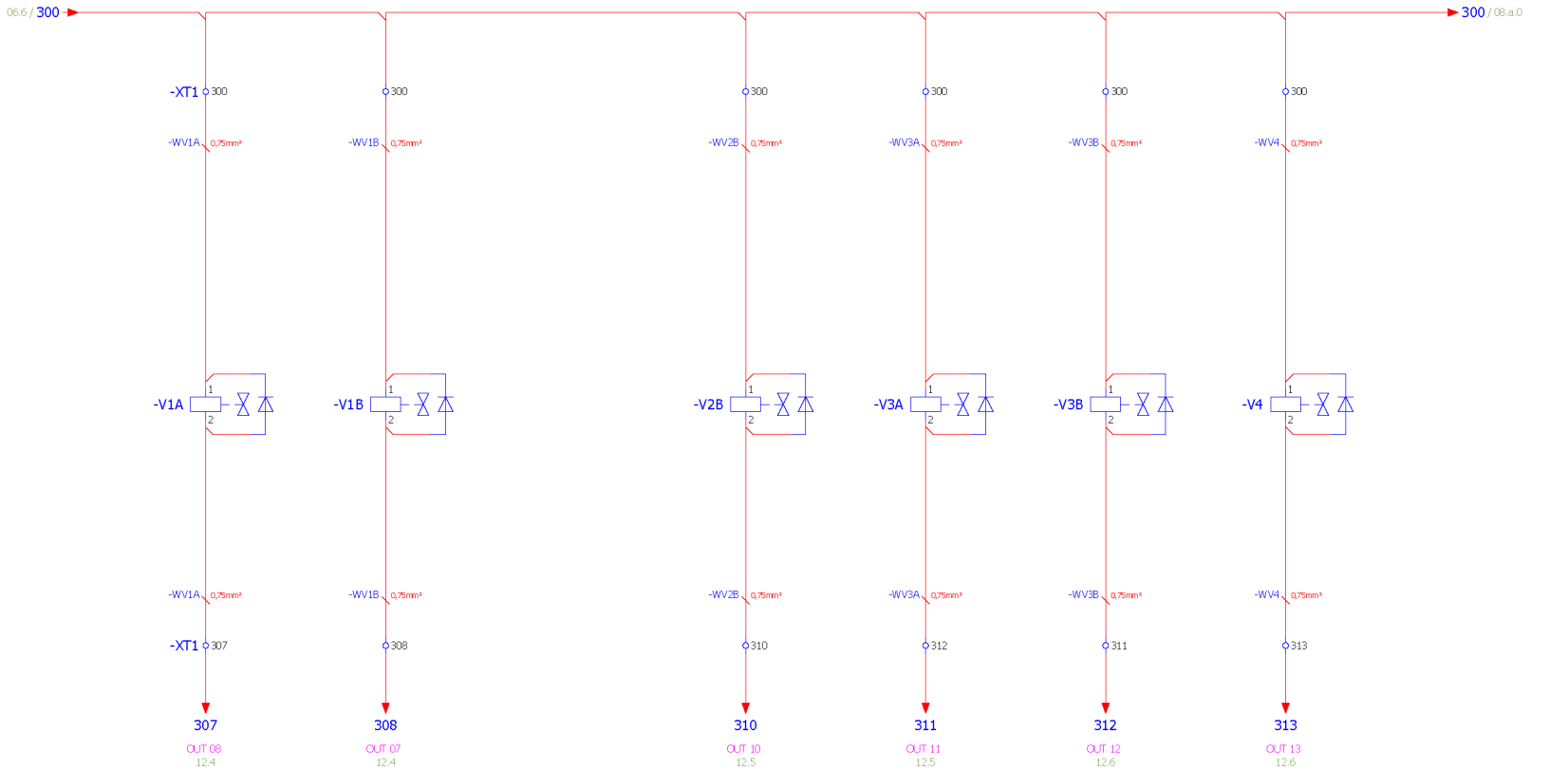

07

BOMAR, s.r.o. Těžební 1236/1 CZ 627 00, Brno	Stroj/Machine/Maschine: Workline 510.350 A-GANC	Název stránky/Name page/Name seiten: Hydraulické ventily/Hydraulic valve/Hydroventil	Číslo dok./Doc.No/Anzahl der Dokumente.: ES-S3000-201-V6.2 Napájení/Power supply/Einspeisung: 3x400V+N+PE, 50Hz Zpracoval/Processed /Hat verarbeitet: Pavlík Datum/Date/Datum: 14.1.2014	List/Page/Seite: 08 Listů/Pages/Seiten: 19

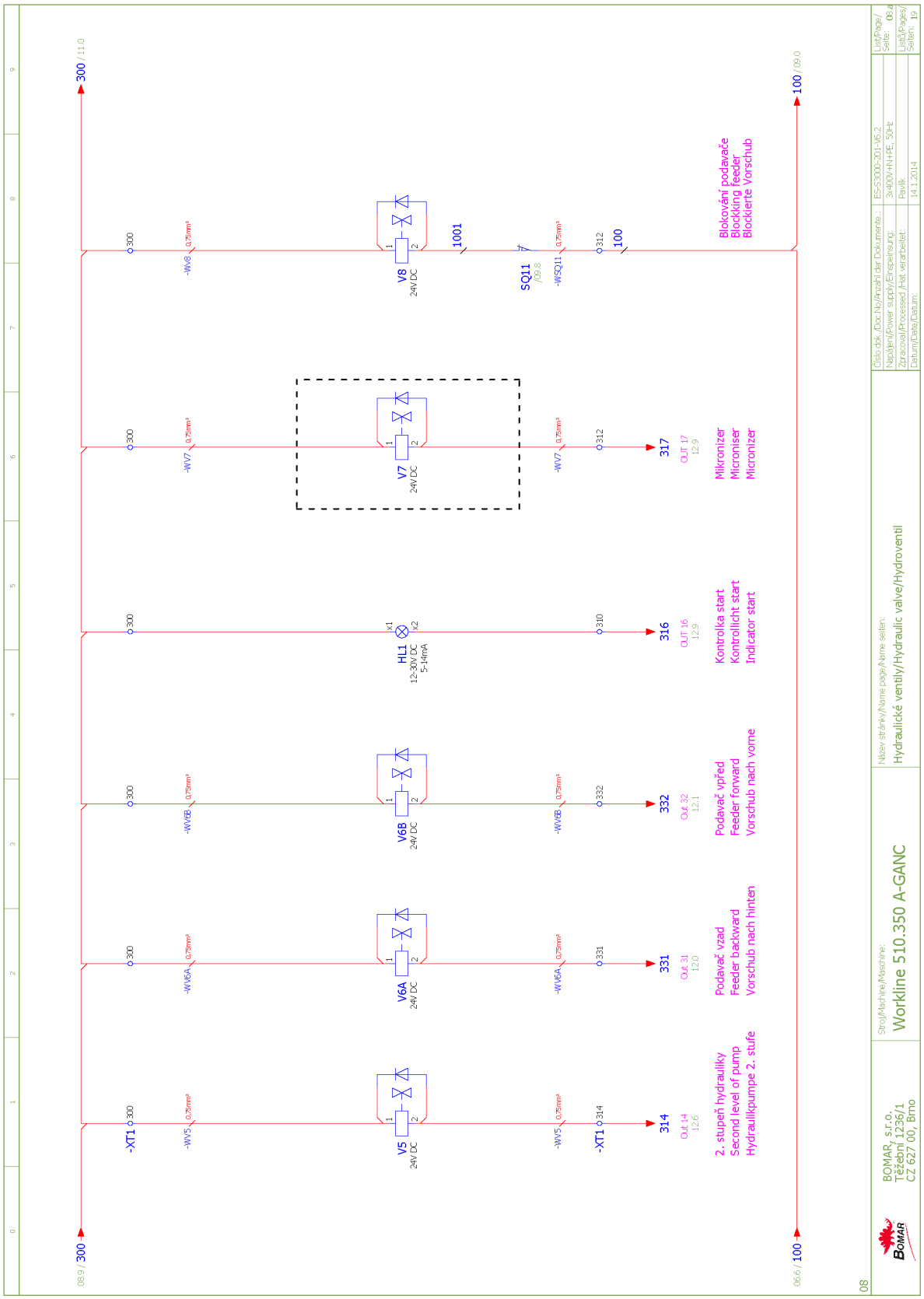
300 / 11.0
08.9 / 300
-XT1
-W5
0,75mm²
V5
24V DC
314
Out 14
12.6
2. stupeň hydraulikly
Second level of pump
Hydraulikpumpe 2. stufe
-W6A
V6A
24V DC
331
Out 31
12.0
Podavač vzad
Feeder backward
Vorschub nach hinten
-W6B
V6B
24V DC
332
Out 32
12.1
Podavač vpřed
Feeder forward
Vorschub nach vorne
HL1
12-30V DC
5-14mA
316
Out 16
12.9
Kontrolka start
Kontrolicht start
Indicator start
-W7
V7
24V DC
317
Out 17
12.9
Mikronizer
Microniser
Micronizer
-W8
V8
24V DC
1001
SQ11
/09.8
-WSQ11
100
Blokování podavače
Blockking feeder
Blockierte Vorschub
06.6 / 100
100 / 09.0
BOMAR, s.r.o.
Těžební 1236/1
CZ 627 00, Brno
Stroj/Machine/Maschine:
Workline 510.350 A-GANC
Název stránky/Name page/Name seiten:
Hydraulické ventily/Hydraulic valve/Hydroventil
Číslo dok./Doc.No/Anzahl der Dokumente:
ES-S3000-201-V6.2
Napájení/Power supply/Einspeisung:
3x400V+N+PE, 50Hz
Zpracoval/Processed /Hat verarbeitet:
Pavlík
Datum/Date/Datum:
14.1.2014
List/Page/Seite:
08.a
List(s)/Pages/Seiten:
19
08

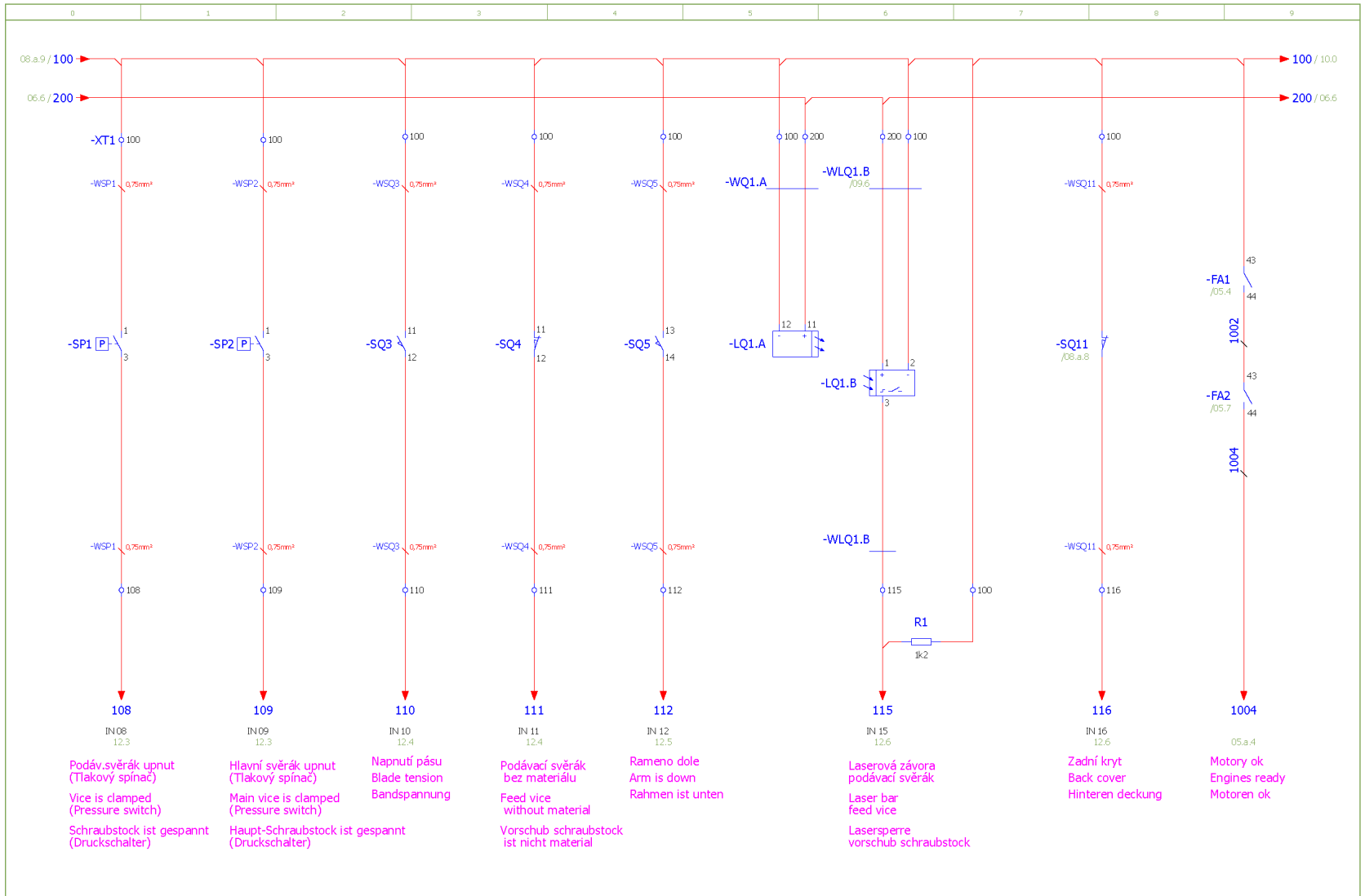
08.a.9 / 100
06.6 / 200
100 / 10.0
200 / 06.6
-XT1
-WSP1
-WSP2
-WSQ3
-WSQ4
-WSQ5
-WSQ11
0,75mm²
-SP1
-SP2
-SQ3
-SQ4
-SQ5
-SQ11
/08.a.8
-WQ1.A
-WLQ1.B
/09.6
-LQ1.A
-LQ1.B
-FA1
/05.4
-FA2
/05.7
1002
1004
R1
1k2
108
109
110
111
112
115
116
1004
IN 08
12.3
IN 09
12.3
IN 10
12.4
IN 11
12.4
IN 12
12.5
IN 15
12.6
IN 16
12.6
05.a.4
Podáv.svěrák upnut
(Tlakový spínač)
Vice is clamped
(Pressure switch)
Schraubstock ist gespannt
(Druckschalter)
Hlavní svěrák upnut
(Tlakový spínač)
Main vice is clamped
(Pressure switch)
Haupt-Schraubstock ist gespannt
(Druckschalter)
Napnutí pásu
Blade tension
Bandspannung
Podávací svěrák
bez materiálu
Feed vice
without material
Vorschub schraubstock
ist nicht material
Rameno dole
Arm is down
Rahmen ist unten
Laserová závora
podávací svěrák
Laser bar
feed vice
Lasersperre
vorschub schraubstock
Zadní kryt
Back cover
Hinteren deckung
Motory ok
Engines ready
Motoren ok
08.a
BOMAR, s.r.o.
Těžební 1236/1
CZ 627 00, Brno
Stroj/Machine/Maschine:
Workline 510.350 A-GANC
Název stránky/Name page/Name seiten:
Vstupy/Inputs/Eingänge
Číslo dok./Doc.No/Anzahl der Dokumente.:
ES-S3000-201-V6.2
Napájení/Power supply/Einspeisung:
3x400V+N+PE, 50Hz
Zpracoval/Processed /Hat verarbeitet:
Pavlík
Datum/Date/Datum:
14.1.2014
List/Page/Seite: 09
Listů/Pages/Seiten: 19

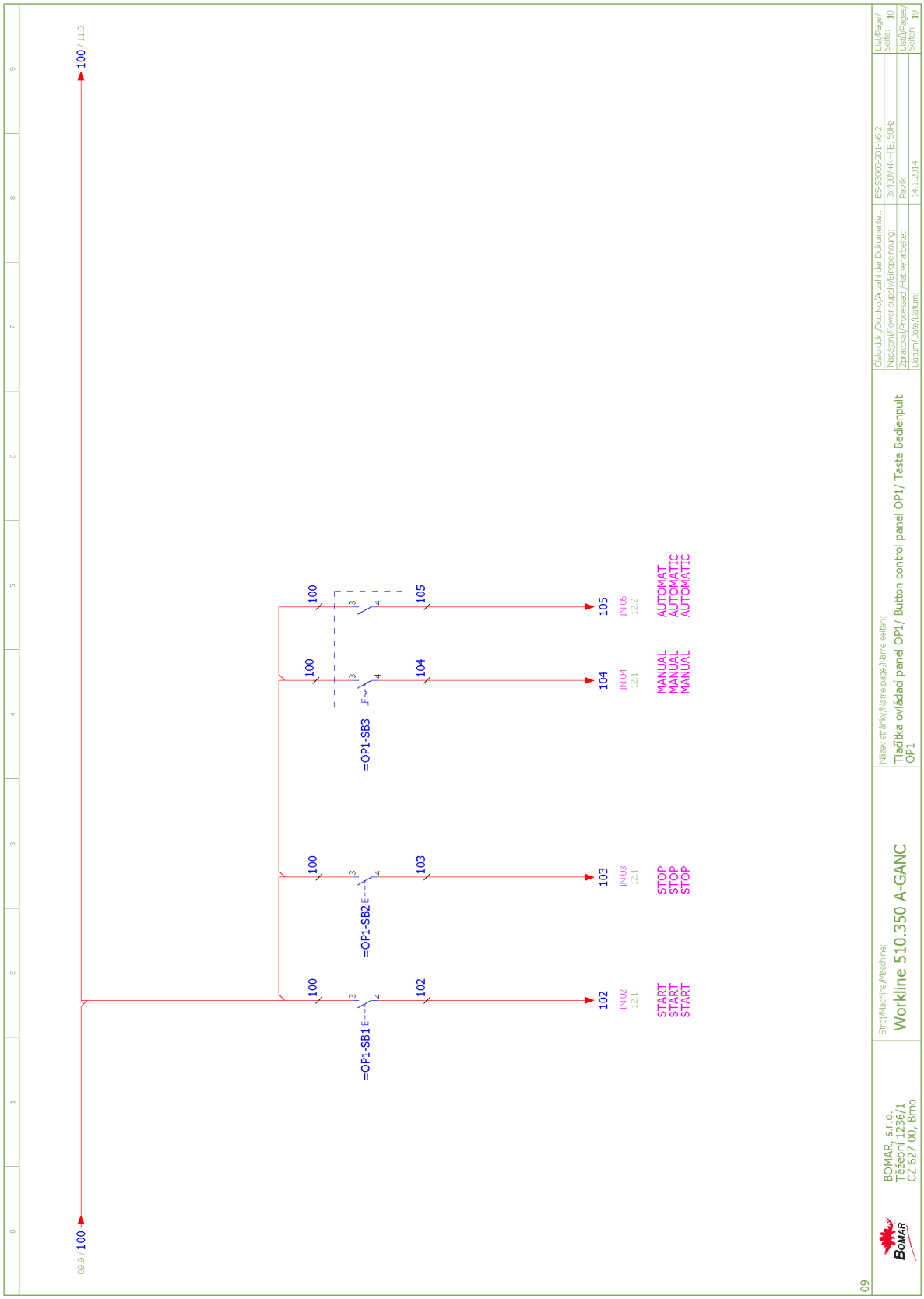
09.9 / 100
100 / 11.0
=OP1-SB1
=OP1-SB2
=OP1-SB3
100
102
103
104
105
IN 02
12.1
IN 03
12.1
IN 04
12.1
IN 05
12.2
START
START
START
STOP
STOP
STOP
MANUAL
MANUAL
MANUAL
AUTOMAT
AUTOMATIC
AUTOMATIC
09
BOMAR, s.r.o.
Těžební 1236/1
CZ 627 00, Brno
Stroj/Machine/Maschine:
Workline 510.350 A-GANC
Název stránky/Name page/Name seiten:
Tlačítka ovládací panel OP1/ Button control panel OP1/ Taste Bedienpult OP1
Číslo dok. /Doc No/Anzahl der Dokumente:
ES-S300-201-V6.2
Napájení/Power supply/Einspeisung:
3x400V+N+PE, 50Hz
Zpracoval/Processed /Hat verarbeitet:
Pavlík
Datum/Date/Datum:
14.1.2014
List/Page/Seite: 10
List(s)/Pages/Seiten: 19

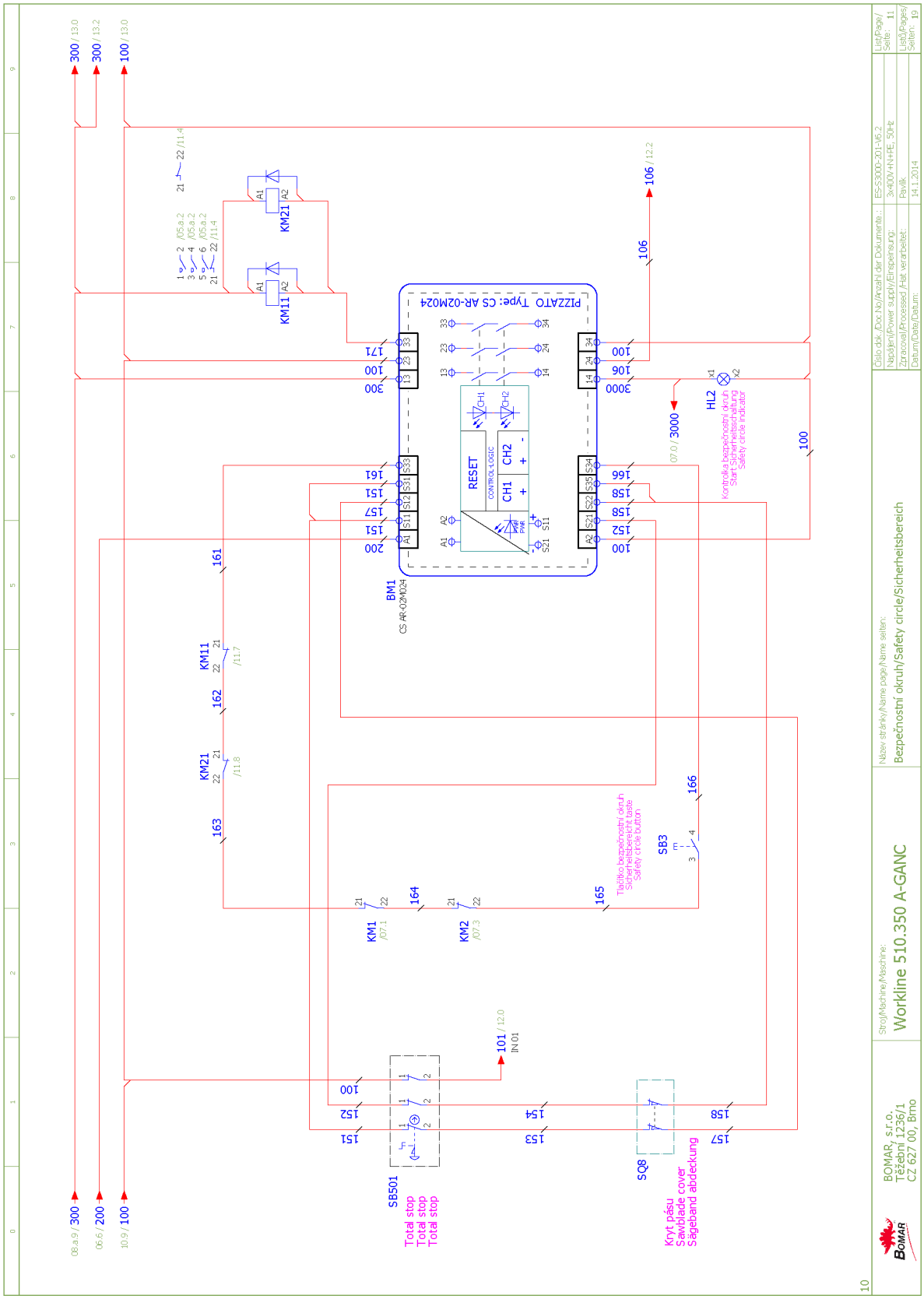
BOMAR, s.r.o.
Těžební 1236/1
CZ 627 00, Brno
Stroj/Machine/Maschine:
Workline 510.350 A-GANC
Název stránky/Name page/Name seiten:
Bezpečnostní okruh/Safety circle/Sicherheitsbereich
Číslo dok./Doc.No/Anzahl der Dokumente:
ES-S3000-201-V6.2
Napájení/Power supply/Einspeisung:
3x400V+N+PE, 50Hz
Zpracoval/Processed /Hak verarbeitet:
Pavlík
Datum/Date/Datum:
14.1.2014
List/Page/Seite: 11
List(s)/Pages/Seiten: 19
PIZZATO Type: CS AR-02M024
BM1
CS AR-02M024
RESET
CONTROL-LOGIC
CH1
CH2
KM11
KM21
KM1
KM2
SB3
SB501
SQ8
HL2
Total stop
Total stop
Total stop
Kryt pásu
Sawblade cover
Sägeband abdeckung
Tlačítko bezpečnostní okruh
Sicherheitsbereich taste
Safety circle button
Kontrolka bezpečnostní okruh
Sicherheitsbereich anzeige
Safety circle indicator
IN 01
08.a.9 / 300
06.6 / 200
10.9 / 100
300 / 13.0
300 / 13.2
100 / 13.0
07.0 / 3000
101 / 12.0
106 / 12.2
10

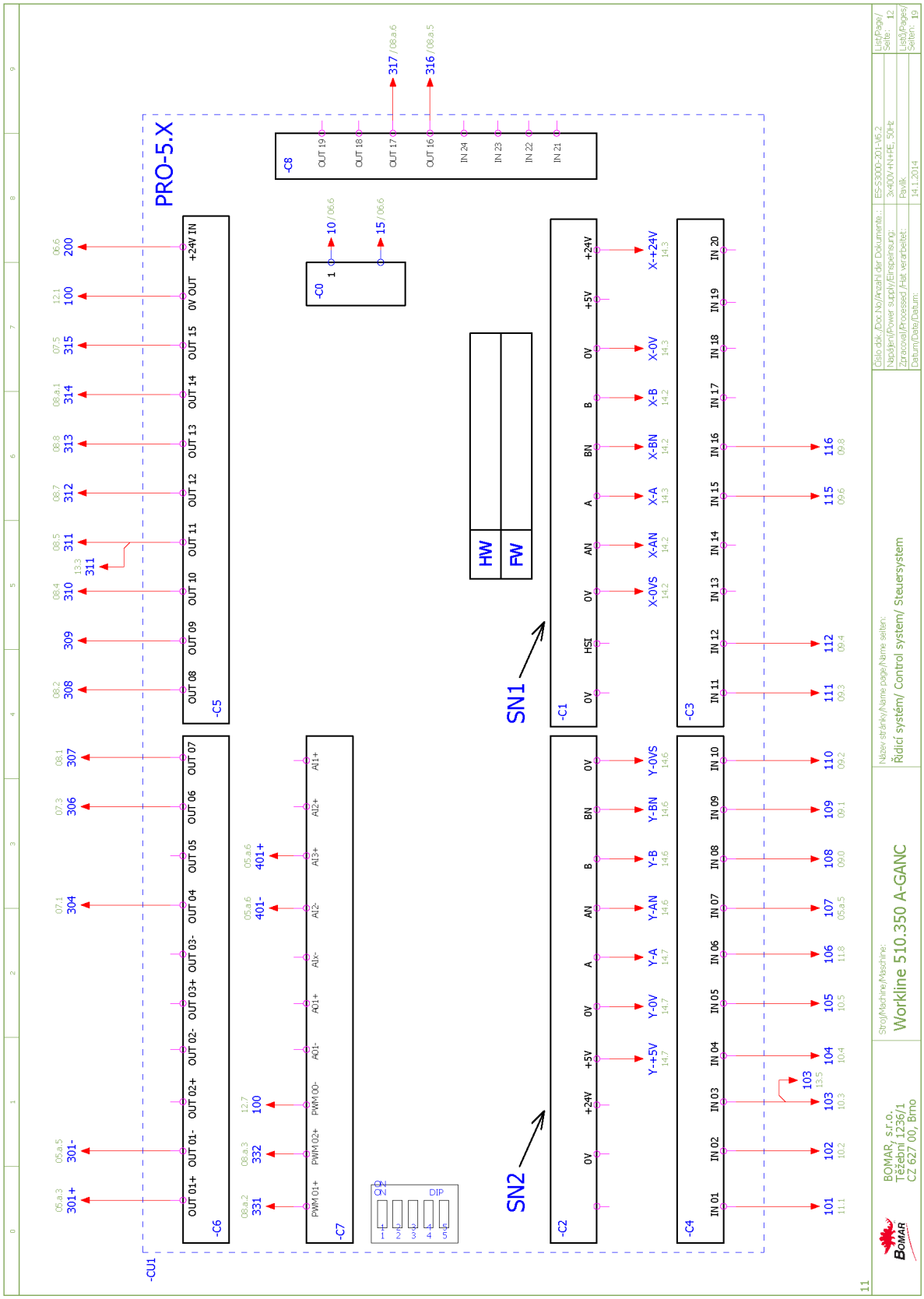
PRO-5.X
-CU1
-C6
-C5
-C7
-C8
-C0
-C1
-C2
-C3
-C4
SN1
SN2
HW
FW
DIP
Stroj/Machine/Maschine:
Workline 510.350 A-GANC
BOMAR, s.r.o.
Těžební 1236/1
CZ 627 00, Brno
Název stránky/Name page/Name seiten:
Řídící systém/ Control system/ Steuersystem
Číslo dok./Doc.No/Anzahl der Dokumente:
ES-S3000-201-V6.2
Napájení/Power supply/Einspeisung:
3x400V+N+PE, 50Hz
Zpracoval/Processed /Hat verarbeitet:
Pavlík
Datum/Date/Datum:
14.1.2014
List/Page/Seite: 12
List(s)/Pages/Seiten: 19

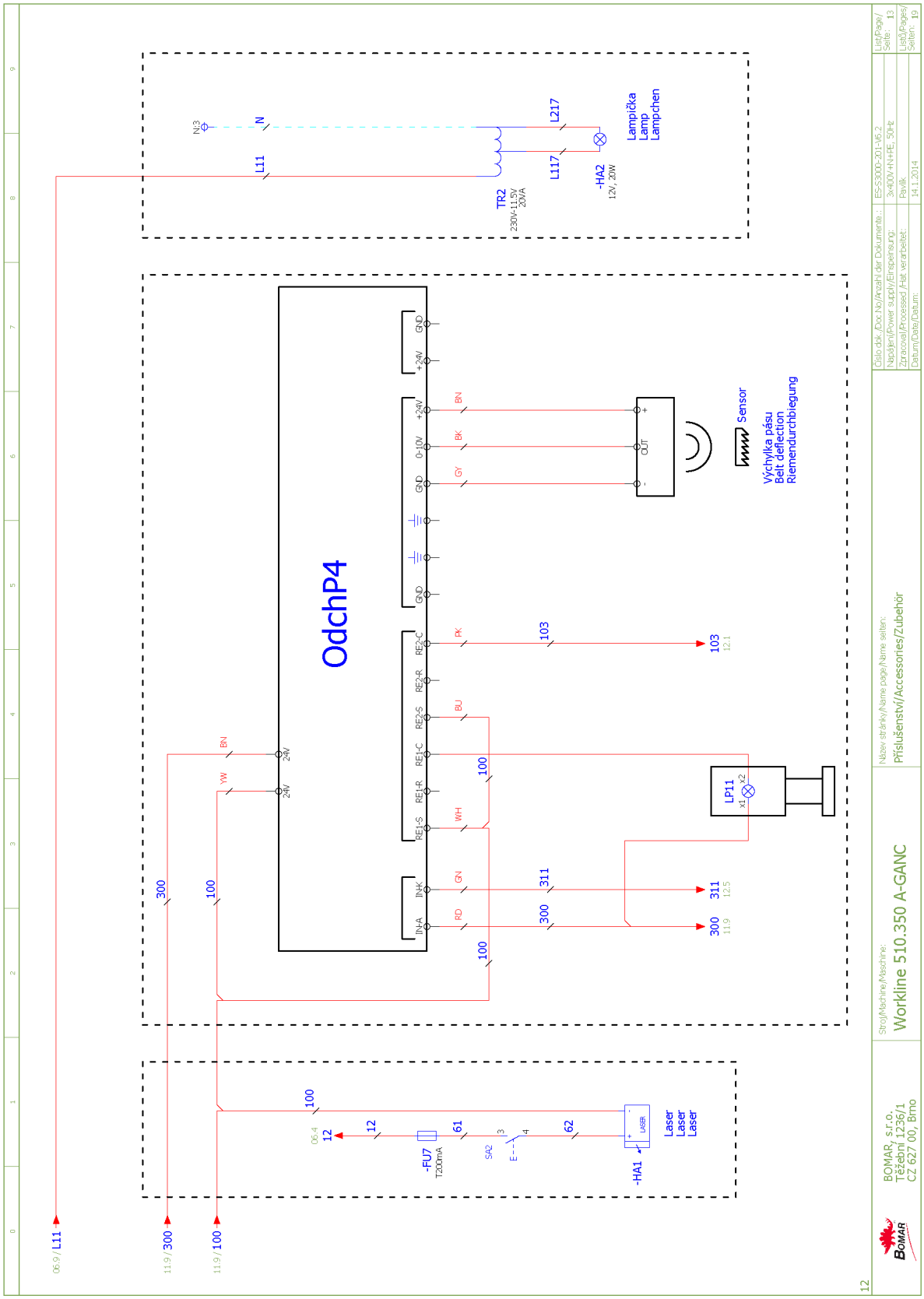

Schémata
Schemas
Schematics

SN1

ELGO	
+	HNĚDÁ BROWN BRAUN
-	BÍLÁ WHITE WEIS
A	ZELENÁ GREEN GRÜN
AN	FIALOVÁ VIOLET VIOLET
B	ŽLUTÁ YELLOW GELB
BN	ORANŽOVÁ ORANGE ORANGE
0VS	ČERNÁ BLACK SCHWARZ

SN2

Senzor polohy ramene Sawframe position sensor Rahmenposition sensor	
+	HNĚDÁ BROWN BRAUN
-	ŠEDÁ GREY GRAU
A	RŮŽOVÁ PINK ROSA
AN	ZELENÁ GREEN GRÜN
B	ŽLUTÁ YELLOW GELB
BN	BÍLÁ WHITE WEIS
0VS	ČERNÁ BLACK SCHWARZ

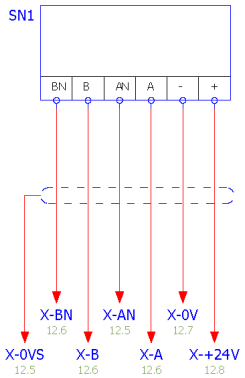

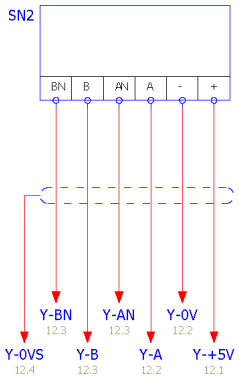

13

BOMAR, s.r.o. Těžební 1236/1 CZ 627 00, Brno	Stroj/Machine/Maschine: Workline 510.350 A-GANC	Název stránky/Name page/Name seiten: Zapojení snímačů/Conection of sensors/Sensoranschluss	Číslo dok./Doc.No/Anzahl der Dokumente.: ES-S3000-201-V6.2 Napájení/Power supply/Einspeinsung: 3x400V+N+PE, 50Hz Zpracoval/Processed /Hat verarbeitet: Pavlík Datum/Date/Datum: 14.1.2014	List/Page/Seite: 14 Listů/Pages/Seiten: 19

6.2. Elektrické schema /
Elektroschema /
Electric scheme – 3×400 V, PE, 50 Hz

Obsah/ Table of contents/ Inhaltsverzeichnis

Stránka/Page/Seite	Název stránky/Name page/Name Seite	/Date Datum/Date/Datum
00	Úvodní strana/Start page/Startseite	14.1.2014
01	Obsah/ Table of contents/ Inhaltsverzeichnis	14.1.2014
02	Rozmístění prvků v rozvaděči RS1	14.1.2014
03	Ovládací panel OP1/Control panel OP1/Bedienpult OP1	14.1.2014
04	Kusovník artiklů/ Parts list/ Artikelstückliste	14.1.2014
04.a	Kusovník artiklů/ Parts list/ Artikelstückliste	14.1.2014
04.b	Kusovník artiklů/ Parts list/ Artikelstückliste	14.1.2014
05	Silová část M1,M2/Power part M1,M2/Feld partie M1,M2	14.1.2014
05.a	Silová část M3/Power part M3/Feld partie M3	14.1.2014
06	Deska zdroje/Power board/Netzgerat-Platte	14.1.2014
07	Stykače motorů, M4/Motor contactor, M4/Motor-Schutzschalter, M4	14.1.2014
08	Hydraulické ventily/Hydraulic valve/Hydroventil	14.1.2014
08.a	Hydraulické ventily/Hydraulic valve/Hydroventil	14.1.2014
09	Vstupy/Inputs/Eingänge	14.1.2014
10	Tlačítka ovládací panel OP1/ Button control panel OP1/ Taste Bedienpult OP1	14.1.2014
11	Bezpečnostní okruh/Safety circle/Sicherheitsbereich	14.1.2014
12	Řidicí systém/ Control system/ Steuersystem	14.1.2014
13	Příslušenství/Accessories/Zubehör	14.1.2014
14	Zapojení snímačů/Conection of sensors/Sensoranschluss	14.1.2014

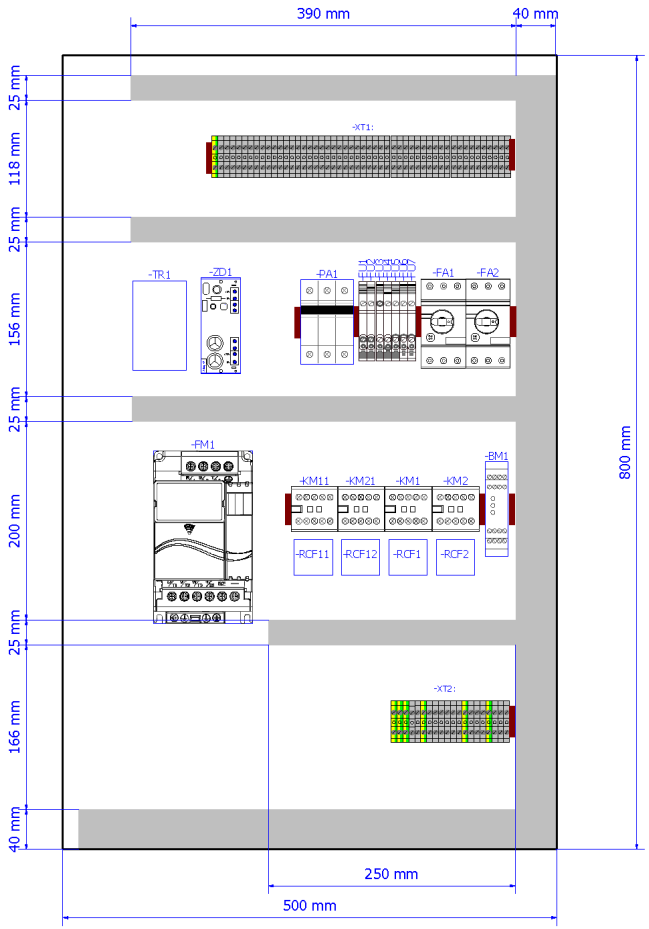

01

BOMAR, s.r.o. Těžební 1236/1 CZ 627 00, Brno	Stroj/Machine/Maschine: Workline 510.350 A-GANC	Název stránky/Name page/Name seiten: Rozmístění prvků v rozvaděči RS1	Číslo dok./Doc.No/Anzahl der Dokumente.:	ES-S3000-202-V6.2	List/Page/Seite: 02
			Napájení/Power supply/Einspeisung:	3x400V+PE, 50Hz	Listů/Pages/Seiten: 19
			Zpracoval/Processed /Hat verarbeitet:	Pavlík	
			Datum/Date/Datum:	14.1.2014	

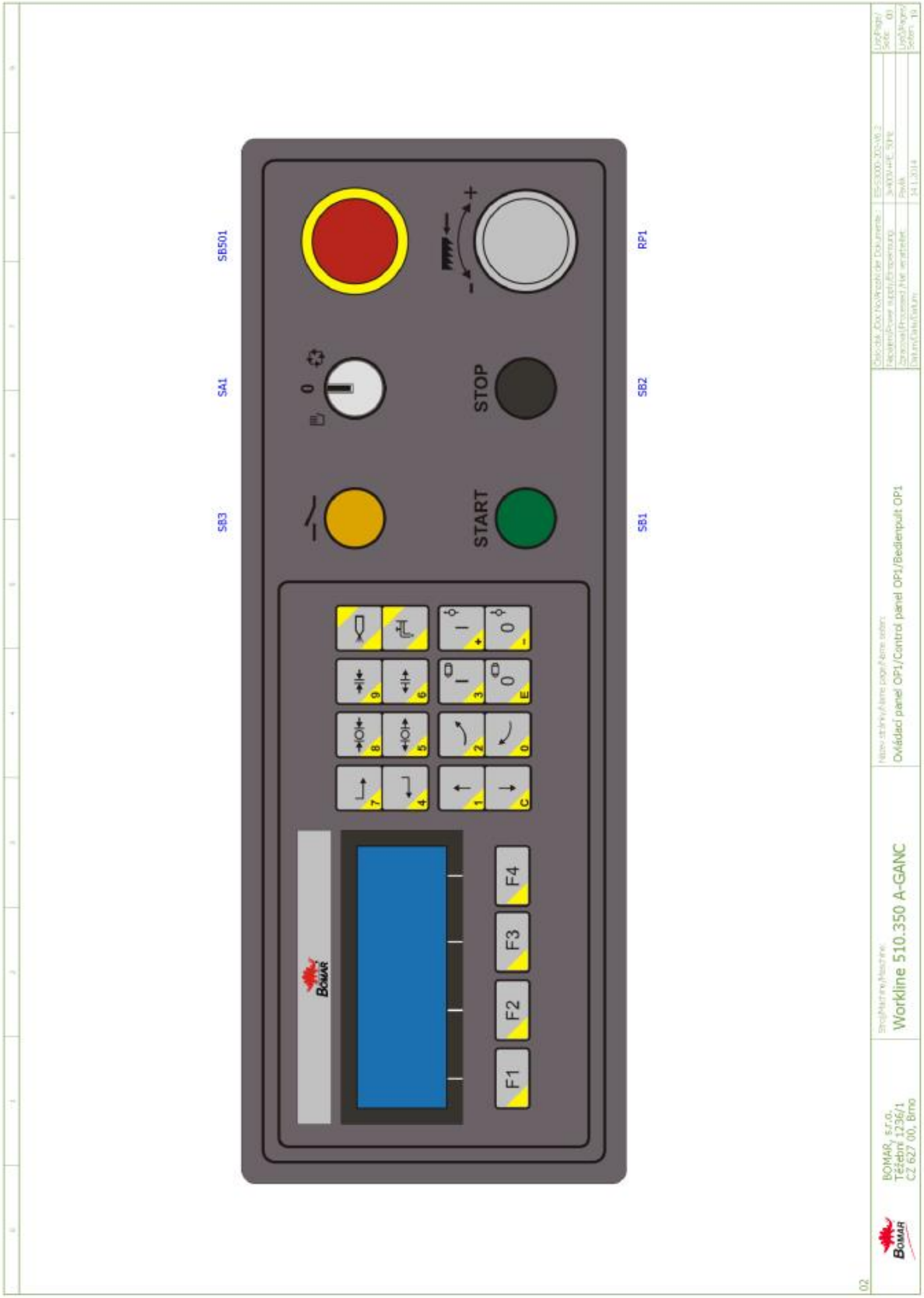
SB501
SA1
SB3
STOP
START
RP1
SB2
SB1
BOMAR
F1
F2
F3
F4
BOMAR, s.r.o.
Těšínská 1236/1
CZ 627 00, Brno
Workline 510.350 A-GANC
Ovládací panel OP1/Control panel OP1/Bedienpult OP1
02

Parts list

Device identification	Device description	Type number	Manufacturer	Part number	Quantity	Location (page.column)
-ZD1	Power supply unit - 15VAC/24VDC; 20VAC/28VDC	ZDR-03	Bomar	265.915	1	/06.3
-CU1	Touch-sensitive keyboard	31.R230-207	AKI ELECTRONIC,spol.s.r.o.	31.R230-207	1	/12.0
-FA1	Manual motor starter - 0.4A	MS116-0,4	ABB	91.045.017	1	/05.4
-FA2	Manual motor starter - 4A	MS116-4,0	ABB	91.045.022	1	/05.7
-HL1	Green light for Eaton adapter	M22-LED-G	EATON	91.061.023	1	/08.a.5
-HL2	White light for Eaton adapter	M22-LED-W	EATON	91.061.034	1	/11.7
-SB3	Yellow translucent switch head	M22-DL-Y	EATON	91.060.053	1	/11.3
=OP1-SB1	Green translucent switch head	M22-DL-G	EATON	91.060.031	1	/10.2
=OP1-SB3	Head of 3 positional switch	M22-WRK3	EATON	91.060.051	1	/10.4
-FU1	Tube fuse - 2A/250V, slow, 5x20	T2A/250V	ESKA	91.230.001	1	/06.1
-FU2	Tube fuse - 2A/250V, slow, 5x20	T2A/250V	ESKA	91.230.001	1	/06.1
-FU3	Tube fuse - 500mA/250V, slow, 5x20	T500mA/250V	ESKA	91.230.011	1	/06.5
-FU6	Tube fuse - 6,3A/250V, slow, 5x20	T6,3A/250V	ESKA	91.230.002	1	/06.5
-FU7	Tube fuse - 200mA/250V, slow, 5x20	T200mA/250V	ESKA	91.230.037	1	/13.1
-RP1	Potenciometr 4k7	TP195 4k7/N20A	GES-ELECTRONICS, a.s.	91.283.015	1	/05.a.6
-RP1	Potentiometer knob - 24mm	S8877 BLK	GES-ELECTRONICS, a.s.	91.060.063	1	/05.a.6
-RCF1	RCF filter	FBOPR1624	Ing. Miroslav Vlček	91.041.015	1	/05.3
-RCF2	RCF filter	FBOPR1624	Ing. Miroslav Vlček	91.041.015	1	/05.6
-RCF11	RCF filter	FBOPR1624	Ing. Miroslav Vlček	91.041.015	1	/05.a.1
-RCF12	RCF filter	FBOPR1624	Ing. Miroslav Vlček	91.041.015	1	/05.a.1
-BM1	Safety relay - 3xNO	CS AR-02M024	PIZZATO	91.051.034	1	/11.5
-FA1	Auxiliary Contact Block - 1xNO+1xNC	HKF1-11	ABB	91.046.002	1	/05.4
-FA2	Auxiliary Contact Block - 1xNO+1xNC	HKF1-11	ABB	91.046.002	1	/05.7
-FU1	Fuse terminal	WK4/THSi5U	WIELAND	91.251.102	1	/06.1
-FU2	Fuse terminal	WK4/THSi5U	WIELAND	91.251.102	1	/06.1
-FU3	Fuse terminal	WK4/THSi5U	WIELAND	91.251.102	1	/06.5
-FU4	Fuse terminal	WK4/THSi5U	WIELAND	91.251.102	1	/06.5
-FU4	Tube fuse - 800mA/250V, slow, 5x20	T800mA/250V	ESKA	91.230.010	1	/06.5

The manufacturer reserves right to use an equivalent replacement device.

Parts list

Device identification	Device description	Type number	Manufacturer	Part number	Quantity	Location (page.column)
-FU5	Fuse terminal	WK4/THSi5U	WIELAND	91.251.102	1	/06.5
-FU5	Tube fuse - 1A/250V, slow, 5x20	T1A/250V	ESKA	91.230.031	1	/06.5
-FU6	Fuse terminal	WK4/THSi5U	WIELAND	91.251.102	1	/06.5
-KM1	Minicontactor - 4kW/400V, 3P	B6S-30-01-1.7-71	ABB	91.040.049	1	/07.1
-KM2	Minicontactor - 4kW/400V, 3P	B6S-30-01-1.7-71	ABB	91.040.049	1	/07.3
-KM11	Minicontactor - 4kW/400V, 3P	B6S-30-01-1.7-71	ABB	91.040.049	1	/11.7
-KM21	Minicontactor - 4kW/400V, 3P	B6S-30-01-1.7-71	ABB	91.040.049	1	/11.8
-PA1	Fuse switch disconnector E-90 - 3P	E 93/32	ABB	91.241.014	1	/05.a.2
-QS1	Disconnector - 3P, 16A	OT16FT3	ABB	91.170.018	1	/05.0
-QS1	Terminal shroud	OTS40T3	ABB	91.170.017	1	/05.0
-RP1	Fastconnect clamp	WAGO 224-112	WIELAND	91.250.009	3	/05.a.6
-SB3	NO contact for Eaton adapter	M22-K10	EATON	91.061.022	1	/11.3
-SB501	Emergency-stop mushroom push - button + 3xNC	YW1B-V4E02R	IDEC	91.060.084	1	/11.1
=OP1-SB1	Attaching adapter + 1NO	M22-AK10	EATON	91.061.021	1	/10.2
=OP1-SB2	Attaching adapter + 1NO	M22-AK10	EATON	91.061.021	1	/10.3
=OP1-SB2	Switch head - black	M22-D-S	EATON	91.060.035	1	/10.3
=OP1-SB3	NO contact for Eaton adapter	M22-K10	EATON	91.061.022	1	/10.4
=OP1-SB3	Attaching adapter + 1NO	M22-AK10	EATON	91.061.021	1	/10.4
-TR1	Toroidal transformer - 0-230-400V/20V/15V, 0.65-0.38A/6A/2A, 150VA	1502304002015	KARBAN s.r.o.	91.080.026	1	/06.2
-SQ8	Safety limit switch - 2xNC	QKS8	KEDU	91.173.012	1	/11.1
-PA1	Cylindric fuse - 12A, 10x38 fast, gG charakteristic	PV10 12A gG	OEZ	91.231.007	3	/05.a.2
-SQ3	Limit switch - 1NC+1NO, M20, slow	D4N-4A32	OMRON	91.173.010	1	/09.2
-SQ11	Limit switch - 1NC+1NO	D4N-4A31	OMRON	91.173.007	1	/09.8
-SQ4	Limit switcher - 2NC, roller on doors(right), M2, slow action	FR 34C1-M2	PIZZATO	91.173.021	1	/09.3
-SQ5	Limit switch - 1NO + 1NC, roller, M2, snap action	FR 605-M2	PIZZATO	91.173.009	1	/09.4
-LQ1.A	Sensor cable	MOD.14/4 M12 SL LC10	SICK	91.142.001	1	/09.5
-LQ1.B	Sensor cable	MOD.15/4 M12 SL LC10	SICK	91.142.002	1	/09.6
-QS1	Handle switch - black	OHBS2RJ	ABB	91.180.015	1	/05.0

The manufacturer reserves right to use an equivalent replacement device.

04

Parts list

Device identification	Device description	Type number	Manufacturer	Part number	Quantity	Location (page.column)
-CU1	Control circuit	PRO-5.X	Bomar	265.917	1	/12.0
-FM1	AC motor drive - 3.7kW, 3x400VAC	VFD037E43A	DELTA ELECTRONICS, INC.	91.012.094	1	/05.a.2
-FU7	Fuse terminal	WK4/THSi5U	WIELAND	91.251.102	1	/13.1
-M4	Fan 24VDC, 154CFM	RDH1238 B2	Xinruilian Electronic Co.	91.015.126	1	/07.5

The manufacturer reserves right to use an equivalent replacement device.

04.a

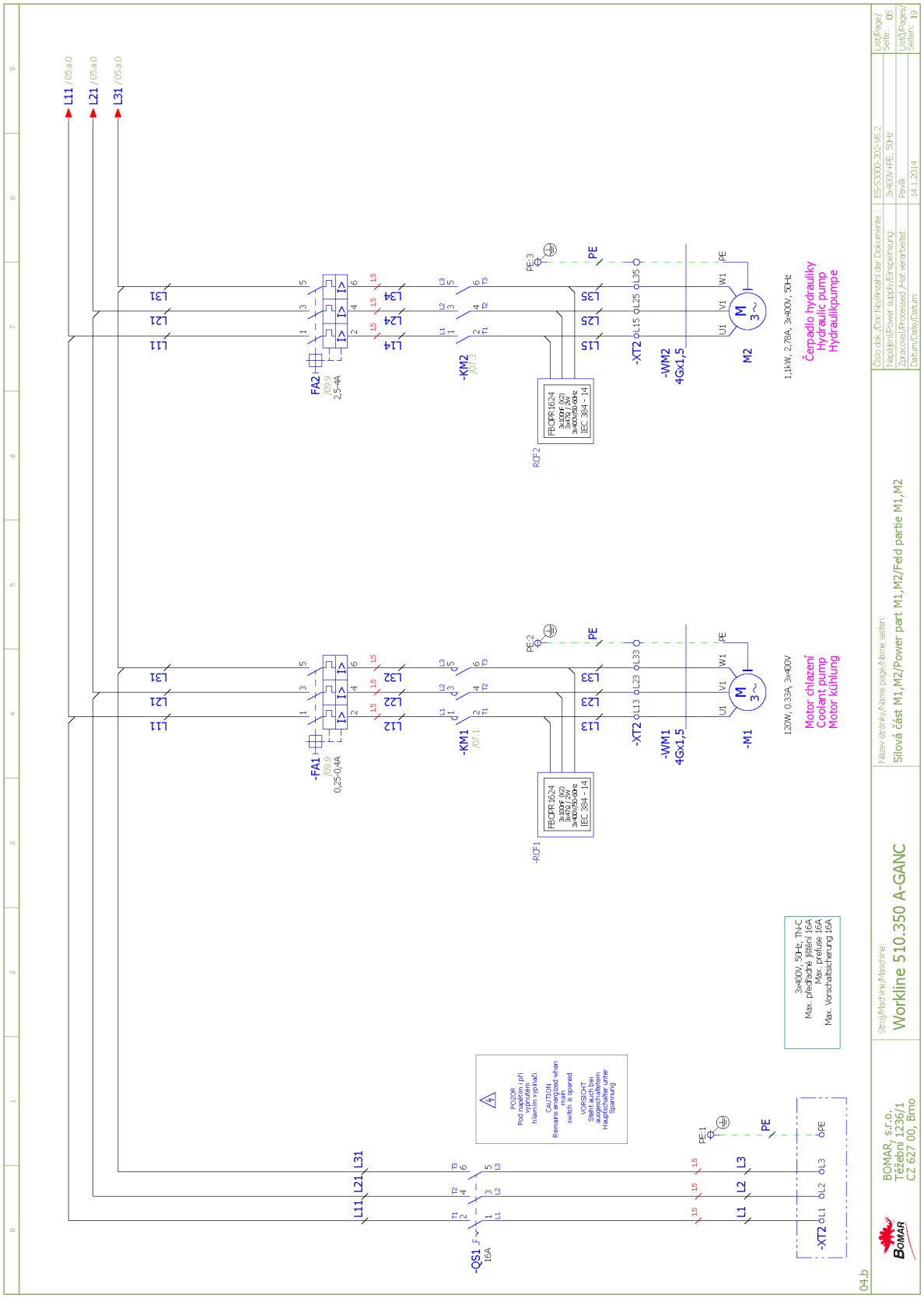
L11 /05.a.0
L21 /05.a.0
L31 /05.a.0
-FA1
/07.5
0,25-0,4A
-FA2
/07.5
2,5-4A
-KM1
/07.1
-KM2
/07.3
-RGF1
-RGF2
FBCPR1624
3x100V /50
3x200V /50Hz
3x400V/50-60Hz
IEC 384 - 14
-XT2
-WM1
4Gx1,5
-WM2
4Gx1,5
-M1
-M2
120W, 0,33A, 3x400V
1,1kW, 2,76A, 3x400V, 50Hz
Motor chlazení
Coolant pump
Motor kühlung
Čerpadlo hydrauliky
Hydraulic pump
Hydraulikpumpe
-QS1
16A
POZOR
Pod napětím při vypnutém hlavním vypínači
CAUTION
Remains energized when switch is opened
VORSICHT
Steht auch bei ausgeschaltetem Hauptschalter unter Spannung
3x400V, 50Hz, Th-C
Max. předchozí jištění 16A
Max. vorsicherung 16A
Stroj/Machine/Maschine:
Workline 510.350 A-GANC
Název stránky/Name page/Name seiten:
Silová část M1,M2/Power part M1,M2/Feld partie M1,M2
BOMAR, s.r.o.
Těžební 1236/1
CZ 627 00, Brno
04.b

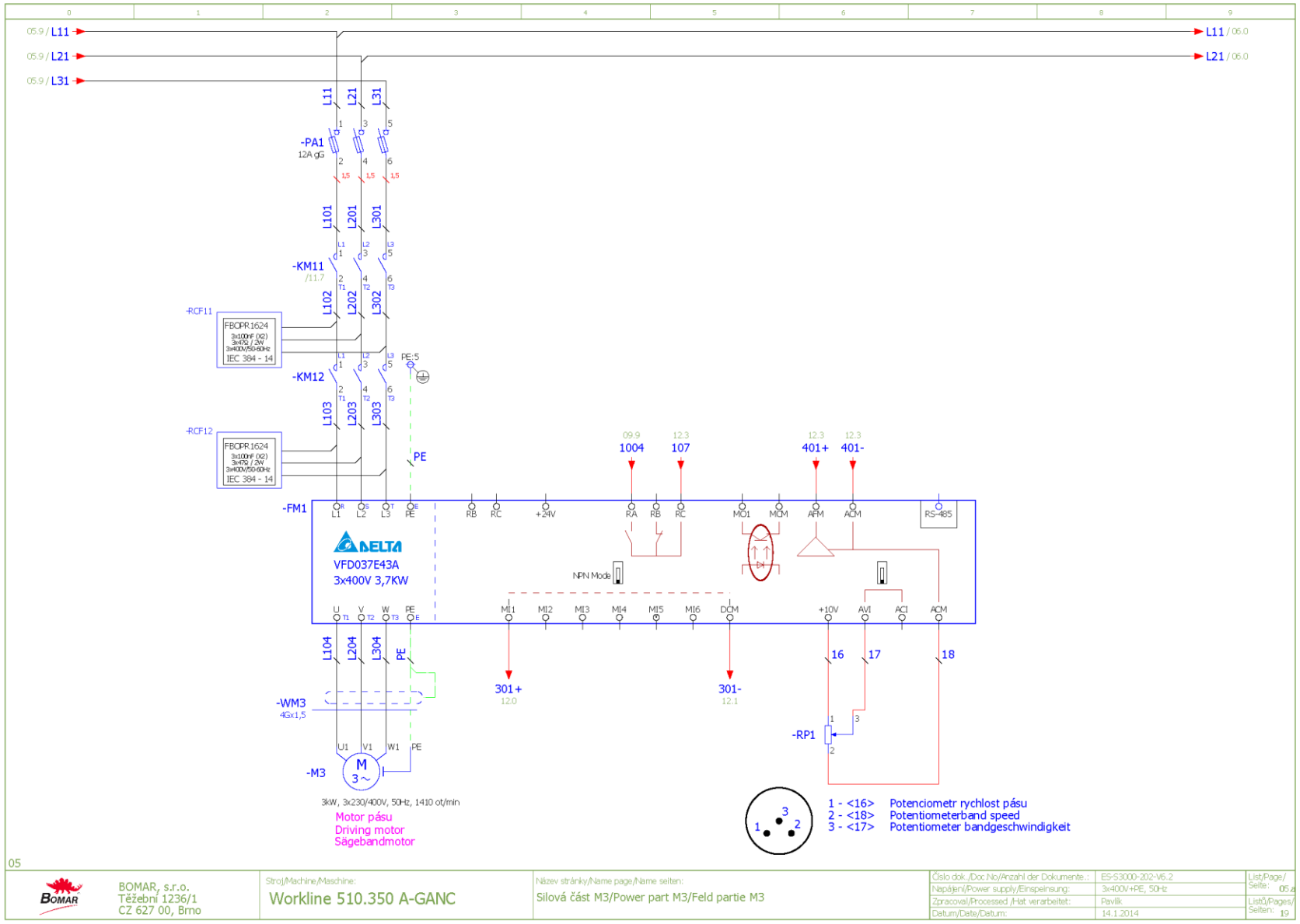
05.9 / L11
05.9 / L21
05.9 / L31
L11 / 06.0
L21 / 06.0
-PA1
12A gG
-KM11
/11.7
-KM12
-RCF11
-RCF12
FBOPR1624
3x100nF (X2)
3x470 / 2W
3x400V/50-60Hz
IEC 384 - 14
PE:5
PE
-FM1
DELTA
VFD037E43A
3x400V 3,7KW
NPN Mode
RS-485
09.9
1004
12.3
107
401+
401-
301+
12.0
301-
12.1
-WM3
4Gx1,5
-M3
3kW, 3x230/400V, 50Hz, 1410 ot/min
Motor pásu
Driving motor
Sägebandmotor
-RP1
1 - <16> Potenciometr rychlost pásu
2 - <18> Potentiometerband speed
3 - <17> Potentiometer bandgeschwindigkeit
05
BOMAR, s.r.o.
Těžební 1236/1
CZ 627 00, Brno
Stroj/Machine/Maschine:
Workline 510.350 A-GANC
Název stránky/Name page/Name seiten:
Silová část M3/Power part M3/Feld partie M3
Číslo dok./Doc.No/Anzahl der Dokumente.: ES-S3000-202-V6.2
Napájení/Power supply/Einspeisung: 3x400V+PE, 50Hz
Zpracoval/Processed /Hat verarbeitet: Pavlík
Datum/Date/Datum: 14.1.2014
List/Page/Seite: 05.a
Listů/Pages/Seiten: 19

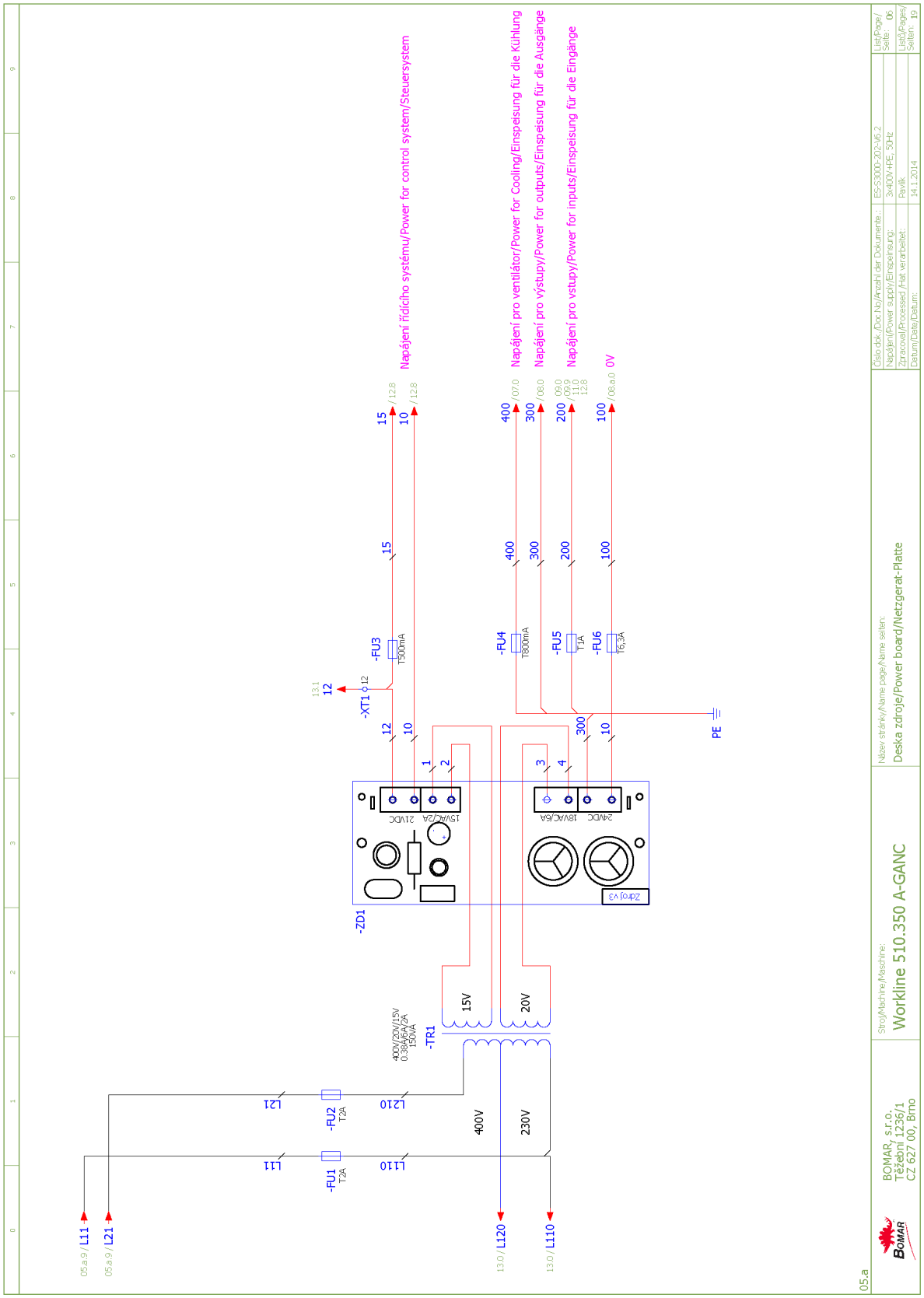
Napájení řídícího systému/Power for control system/Steuersystem
Napájení pro ventilátor/Power for Cooling/Einspeisung für die Kühlung
Napájení pro výstupy/Power for outputs/Einspeisung für die Ausgänge
Napájení pro vstupy/Power for inputs/Einspeisung für die Eingänge
0V
-XT1
-FU3
T500mA
-FU4
T800mA
-FU5
T1A
-FU6
T6,3A
-FU1
T2A
-FU2
T2A
-TR1
400V/230V/15V
0,3A/6A/2A
150VA
-ZD1
15V
20V
400V
230V
PE
L11
L21
L110
L120
Stroj/Machine/Maschine:
Workline 510.350 A-GANC
BOMAR, s.r.o.
Těžební 1236/1
CZ 627 00, Brno
Název stránky/Name page/Name seiten:
Deska zdroje/Power board/Netzgerat-Platte
Číslo dok./Doc.No/Anzahl der Dokumente:
ES-S3000-202-V6.2
Napájení/Power supply/Einspeisung:
3x400V+PE, 50Hz
Zpracoval/Processed /Hat verarbeitet:
Pavlík
Datum/Date/Datum:
14.1.2014
List/Page/Seite: 06
List(s)/Pages/Seiten: 19
05.a

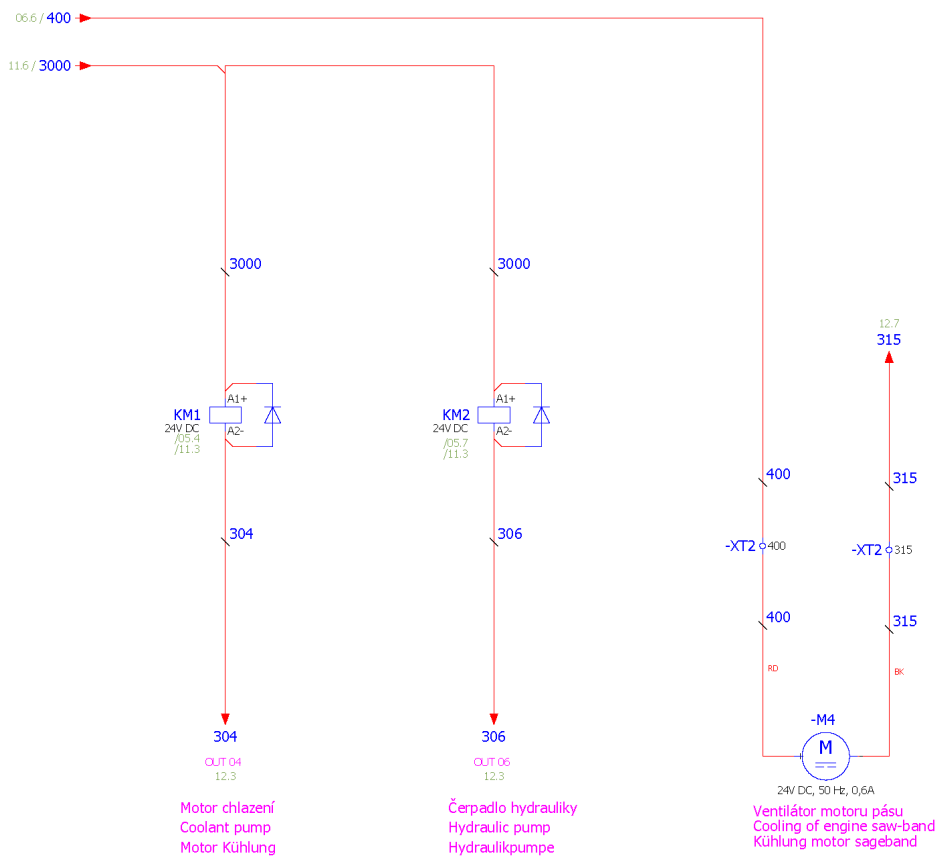

06

BOMAR, s.r.o. Těžební 1236/1 CZ 627 00, Brno	Stroj/Machine/Maschine: Workline 510.350 A-GANC	Název stránky/Name page/Name seiten: Stykače motorů, M4/Motor contactor, M4/Motor-Schutzschalter, M4	Číslo dok./Doc.No/Anzahl der Dokumente.: ES-S3000-202-V6.2 Napájení/Power supply/Einspeisung: 3x400V+PE, 50Hz Zpracoval/Processed /Hat verarbeitet: Pavlík Datum/Date/Datum: 14.1.2014	List/Page/Seite: 07 Listů/Pages/Seiten: 19

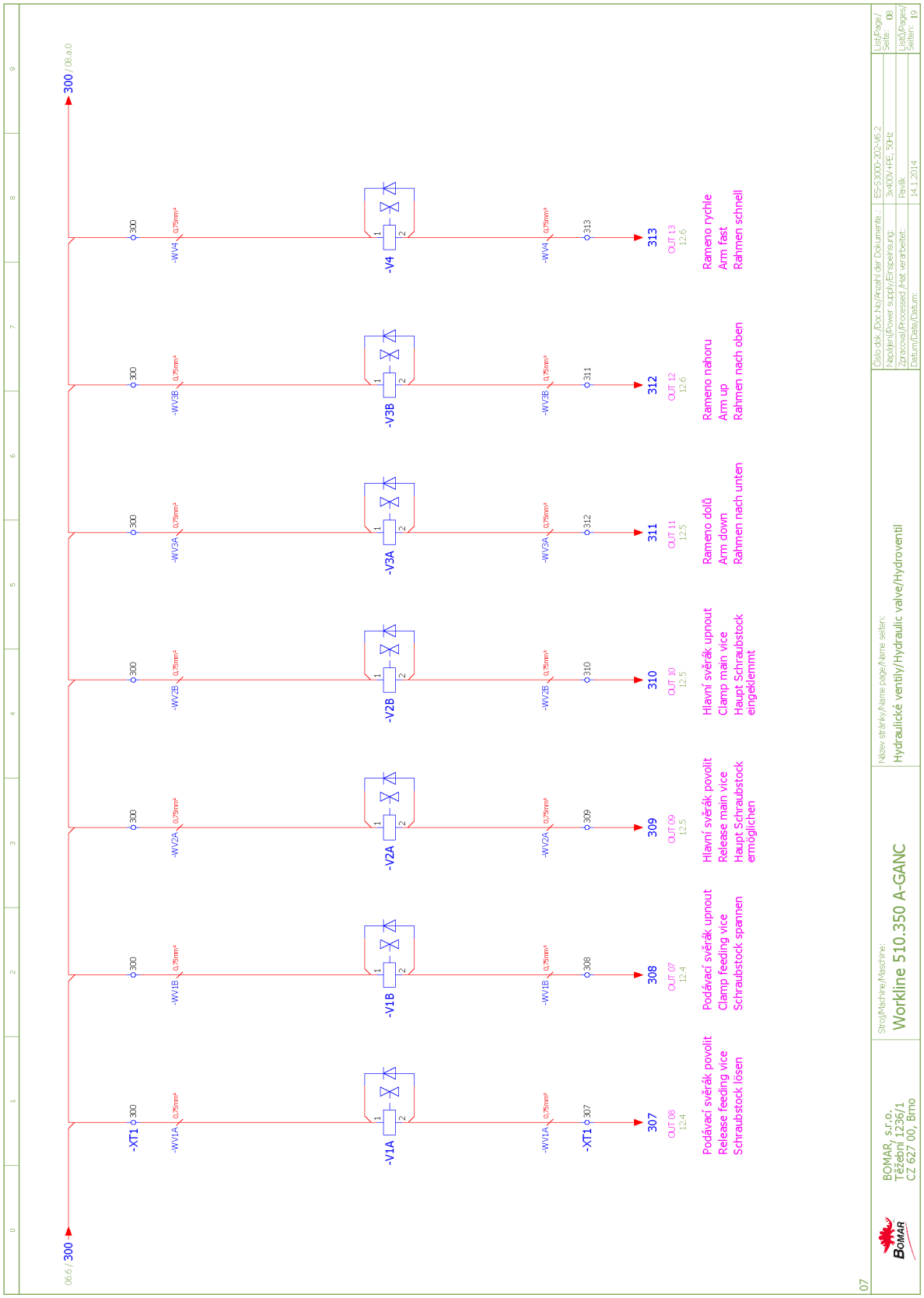
06.6 / 300
300 / 06.a.0
-XT1
-WV1A
-WV1B
-WV2A
-WV2B
-WV3A
-WV3B
-WV4
-V1A
-V1B
-V2A
-V2B
-V3A
-V3B
-V4
307
308
309
310
311
312
313
Podávací svěrák povolit
Release feeding vice
Schraubstock lösen
Podávací svěrák upnout
Clamp feeding vice
Schraubstock spannen
Hlavní svěrák povolit
Release main vice
Haupt Schraubstock ermöglichen
Hlavní svěrák upnout
Clamp main vice
Haupt Schraubstock eingeklemmt
Rameno dolů
Arm down
Rahmen nach unten
Rameno nahoru
Arm up
Rahmen nach oben
Rameno rychle
Arm fast
Rahmen schnell
BOMAR, s.r.o.
Těžební 1236/1
CZ 627 00, Brno
Stroj/Machine/Maschine:
Workline 510.350 A-GANC
Název stránky/Name page/Name seiten:
Hydraulické ventily/Hydraulic valve/Hydroventil
Číslo dok./Doc.No./Anzahl der Dokumente:
ES-S300-202-V6.2
Napájení/Power supply/Einspeisung:
3x400V+PE, 50Hz
Zpracoval/Processed /Hat verarbeitet:
Pavlík
Datum/Date/Datum:
14.1.2014
List/Page/Seite: 08
List(s)/Pages/Seiten: 19
07

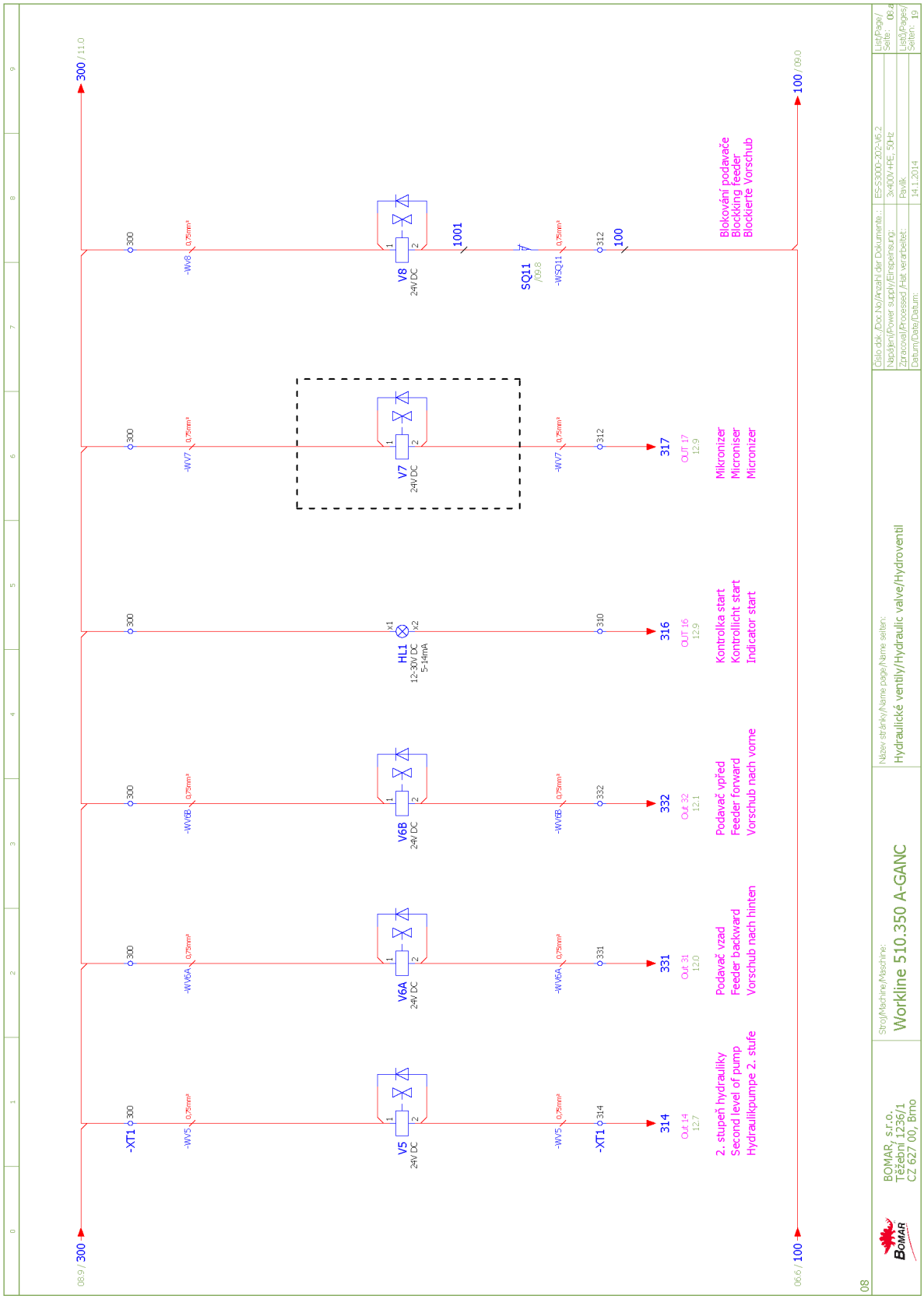
08.9 / 300
300 / 11.0
06.6 / 100
100 / 09.0
-XT1
V5
24V DC
V6A
24V DC
V6B
24V DC
H1L1
12-30V DC
5-14mA
V7
24V DC
V8
24V DC
SQ11
1001
100
314
331
332
316
317
2. stupeň hydraulilky
Second level of pump
Hydraulikpumpe 2. stufe
Podavač vzad
Feeder backward
Vorschub nach hinten
Podavač vpřed
Feeder forward
Vorschub nach vorne
Kontrolka start
Kontrollicht start
Indicator start
Mikronizer
Microniser
Micronizer
Blokování podavače
Blockking feeder
Blockierte Vorschub
BOMAR, s.r.o.
Těžební 1236/1
CZ 627 00, Brno
Stroj/Machine/Maschine:
Workline 510.350 A-GANC
Název stránky/Name page/Name seiten:
Hydraulické ventily/Hydraulic valve/Hydroventil
Číslo dok./Doc.No/Anzahl der Dokumente:
ES-S3000-202-V6.2
Napájení/Power supply/Einspeisung:
3x400V+PE, 50Hz
Zpracoval/Processed /Hat verarbeitet:
Pavlík
Datum/Date/Datum:
14.1.2014
List/Page/Seite: 08.a
List(s)/Pages/Seiten: 19
08

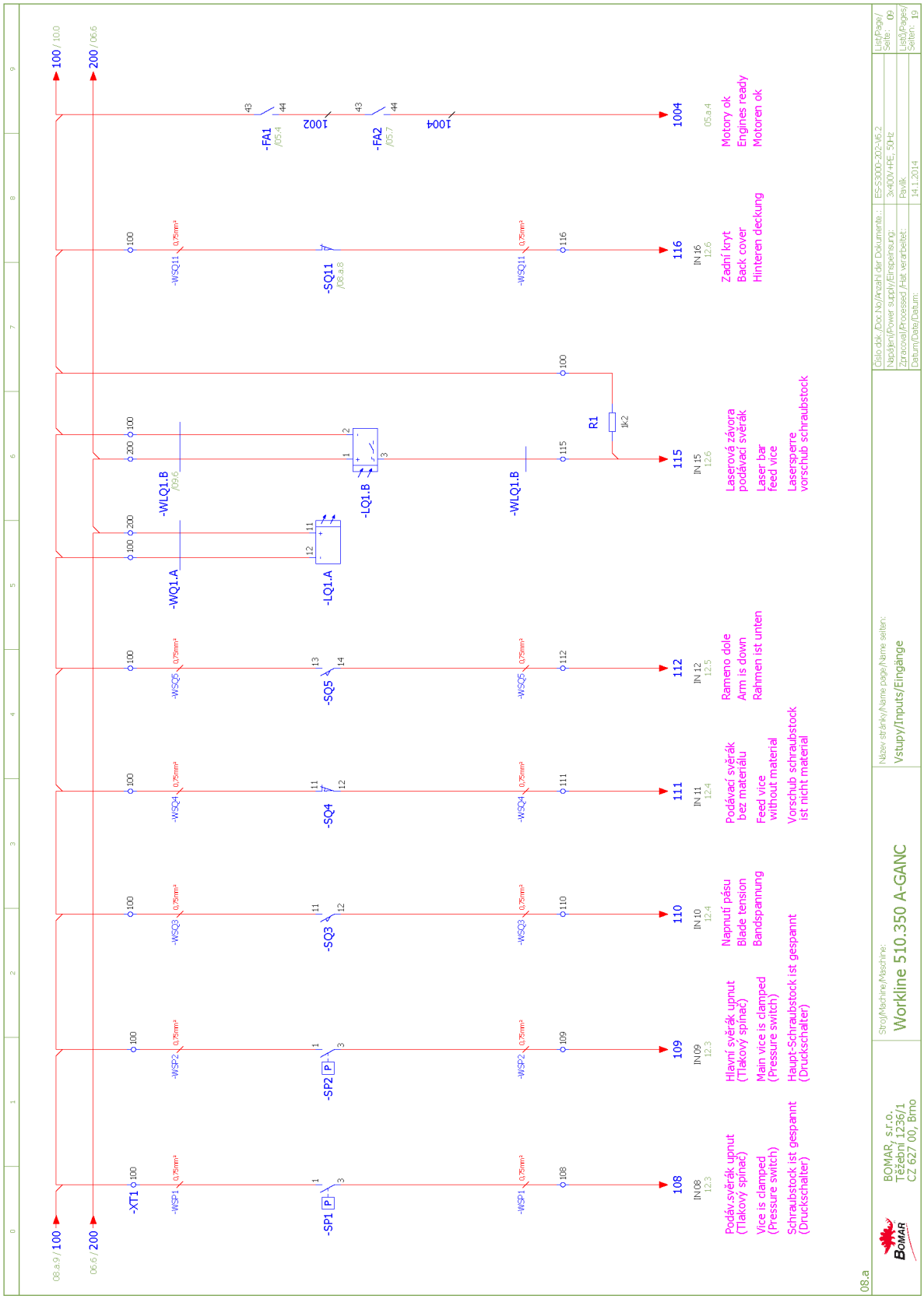
08.a.9 / 100
06.6 / 200
100 / 10.0
200 / 06.6
-XT1
-WSP1
-SP1
-WSP2
-SP2
-WSQ3
-SQ3
-WSQ4
-SQ4
-WSQ5
-SQ5
-WQ1.A
-LQ1.A
-WLQ1.B
-LQ1.B
-WSQ11
-SQ11
-FA1
-FA2
R1
1K2
108
109
110
111
112
115
116
1004
Podávací svěrák upnut (Tlakový spínač)
Vice is clamped (Pressure switch)
Schraubstock ist gespannt (Drucksschalter)
Hlavní svěrák upnut (Tlakový spínač)
Main vice is clamped (Pressure switch)
Haupt-Schraubstock ist gespannt (Drucksschalter)
Napnutí pásu
Blade tension
Bandspannung
Podávací svěrák bez materiálu
Feed vice without material
Vorschub schraubstock ist nicht material
Rameno dole
Arm is down
Rahmen ist unten
Laserová závora podávací svěrák
Laser bar feed vice
Lasersperre vorschub schraubstock
Zadní kryt
Back cover
Hinteren deckung
Motory ok
Engines ready
Motoren ok
BOMAR, s.r.o.
Těžební 1236/1
CZ 627 00, Brno
Stroj/Machine/Maschine:
Workline 510.350 A-GANC
Název stránky/Name page/Name seiten:
Vstupy/Inputs/Eingänge
Číslo dok./Doc.No./Anzahl der Dokumente:
ES-S300-202-V6.2
Napájení/Power supply/Einspeisung:
3x400V+PE, 50Hz
Zpracoval/Processed /Hat verarbeitet:
Pavlík
Datum/Date/Datum:
14.1.2014
List/Page/Seite: 09
List(s)/Pages/Seiten: 19
08.a

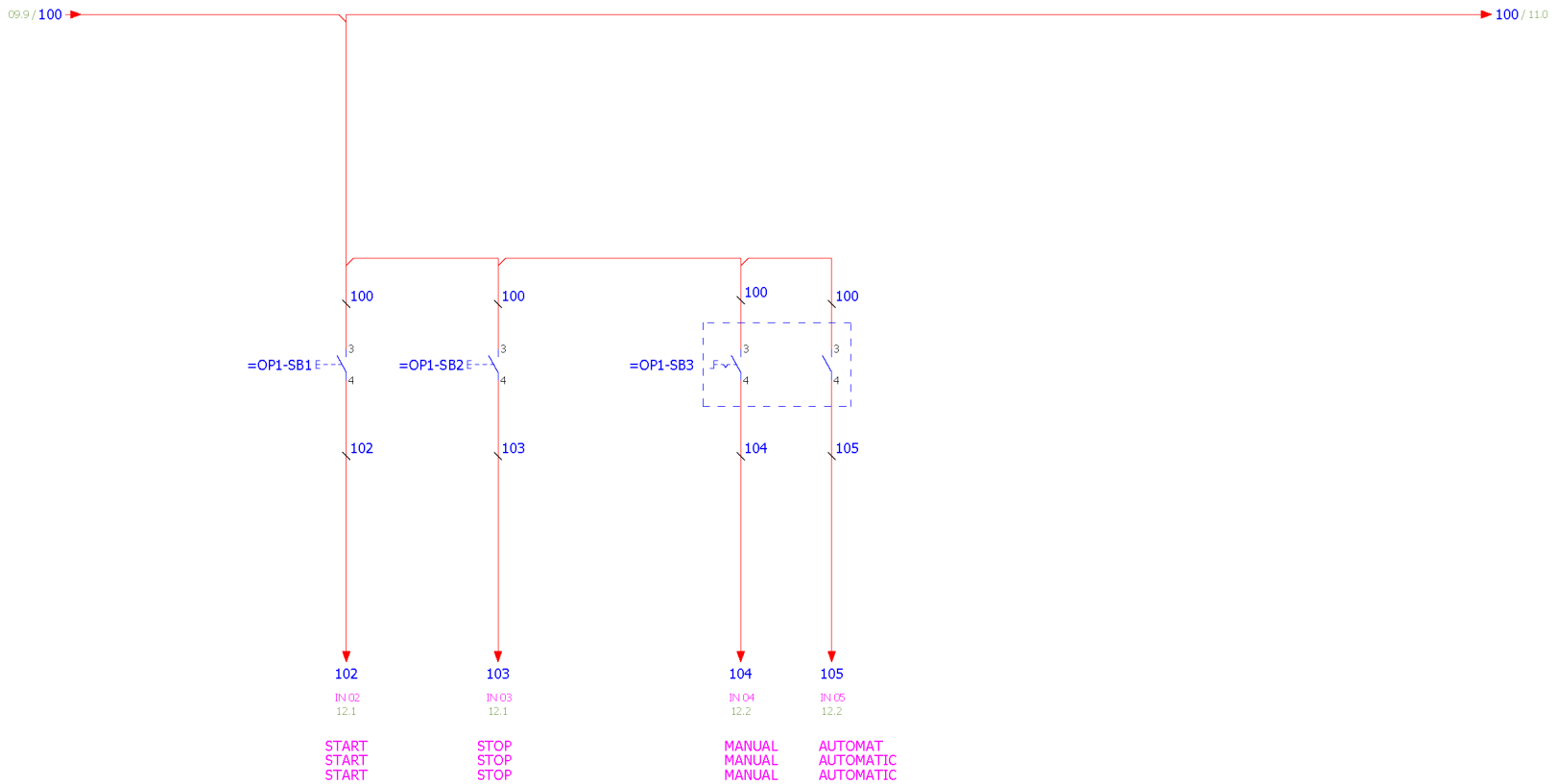

09

BOMAR, s.r.o. Těžební 1236/1 CZ 627 00, Brno	Stroj/Machine/Maschine: Workline 510.350 A-GANC	Název stránky/Name page/Name seiten: Tlačítka ovládací panel OP1/ Button control panel OP1/ Taste Bedienpult OP1	Číslo dok./Doc.No/Anzahl der Dokumente.: ES-S3000-202-V6.2 Napájení/Power supply/Einspeisung: 3x400V+PE, 50Hz Zpracoval/Processed /Hat verarbeitet: Pavlík Datum/Date/Datum: 14.1.2014	List/Page/Seite: 10 Listů/Pages/Seiten: 19

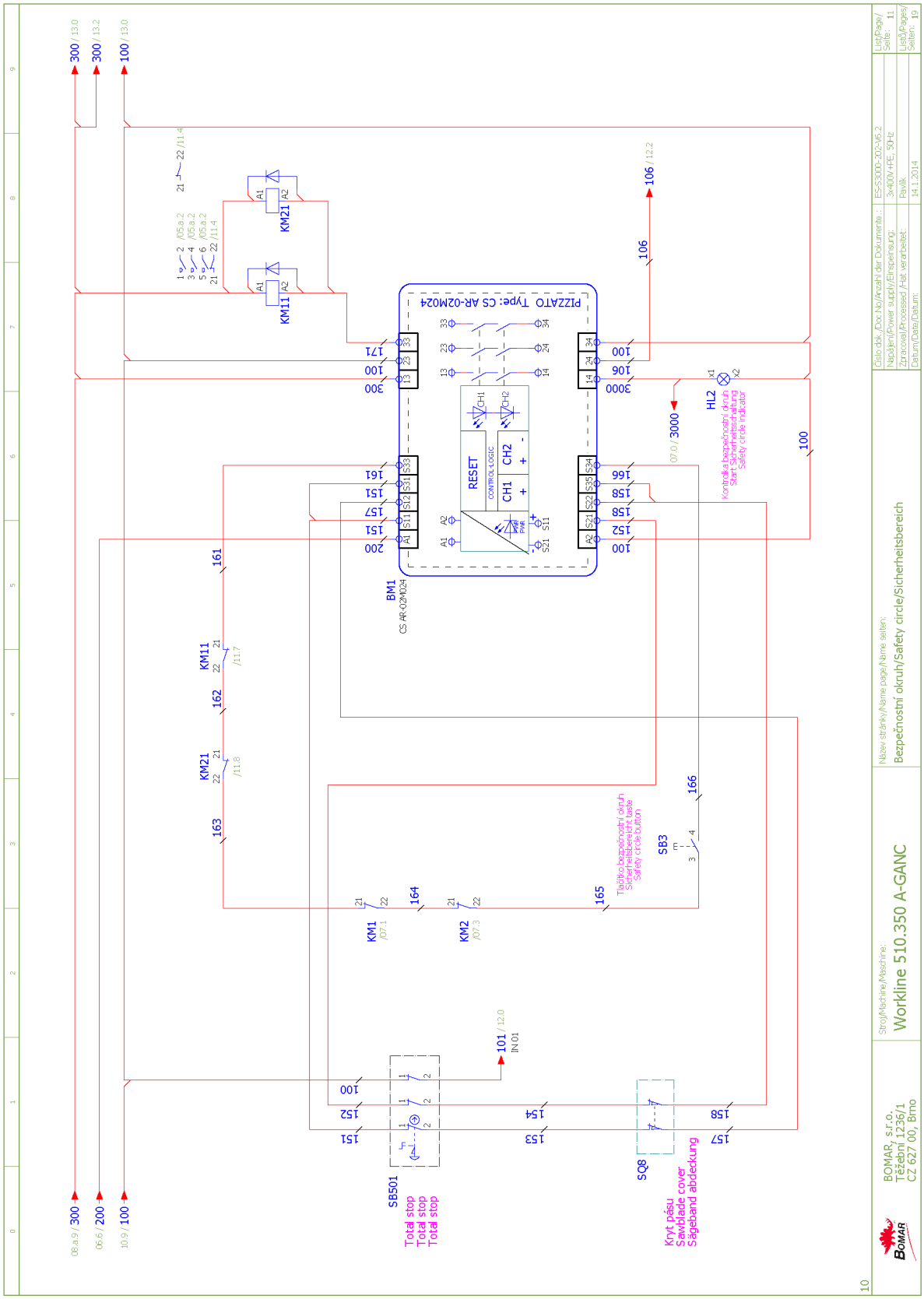
Název stránky/Name page/Name seiten:
Bezpečnostní okruh/Safety circle/Sicherheitsbereich
Stroj/Machine/Maschine:
Workline 510.350 A-GANC
BOMAR, s.r.o.
Těžební 1236/1
CZ 627 00, Brno
Číslo dok./Doc.No/Anzahl der Dokumente:
E5-S300-202-V6.2
Napětí/Power supply/Einspeisung:
3x400V+PE, 50Hz
Zpracoval/Processed /Hat verarbeitet:
Pavlík
Datum/Date/Datum:
14.1.2014
List/Page/Seite: 11
List(s)/Pages/Seiten: 19
PIZZATO Type: CS AR-02M024
RESET
CONTROL-LOGIC
CH1
CH2
BM1
CS AR-02M024
KM11
KM21
KM1
KM2
SB3
SB501
SQ8
HL2
Total stop
Total stop
Total stop
Kryt pásu
Sawblade cover
Sägeband abdeckung
Tlačítko bezpečnostní okruh
Sicherheitsbereicht taste
Safety circle button
Kontrolka bezpečnostní okruh
Start-Sicherheitsschaltung
Safety circle indicator
IN 01
300 / 13.0
300 / 13.2
100 / 13.0
106 / 12.2
3000
101 / 12.0
08.a.9 / 300
06.6 / 200
10.9 / 100

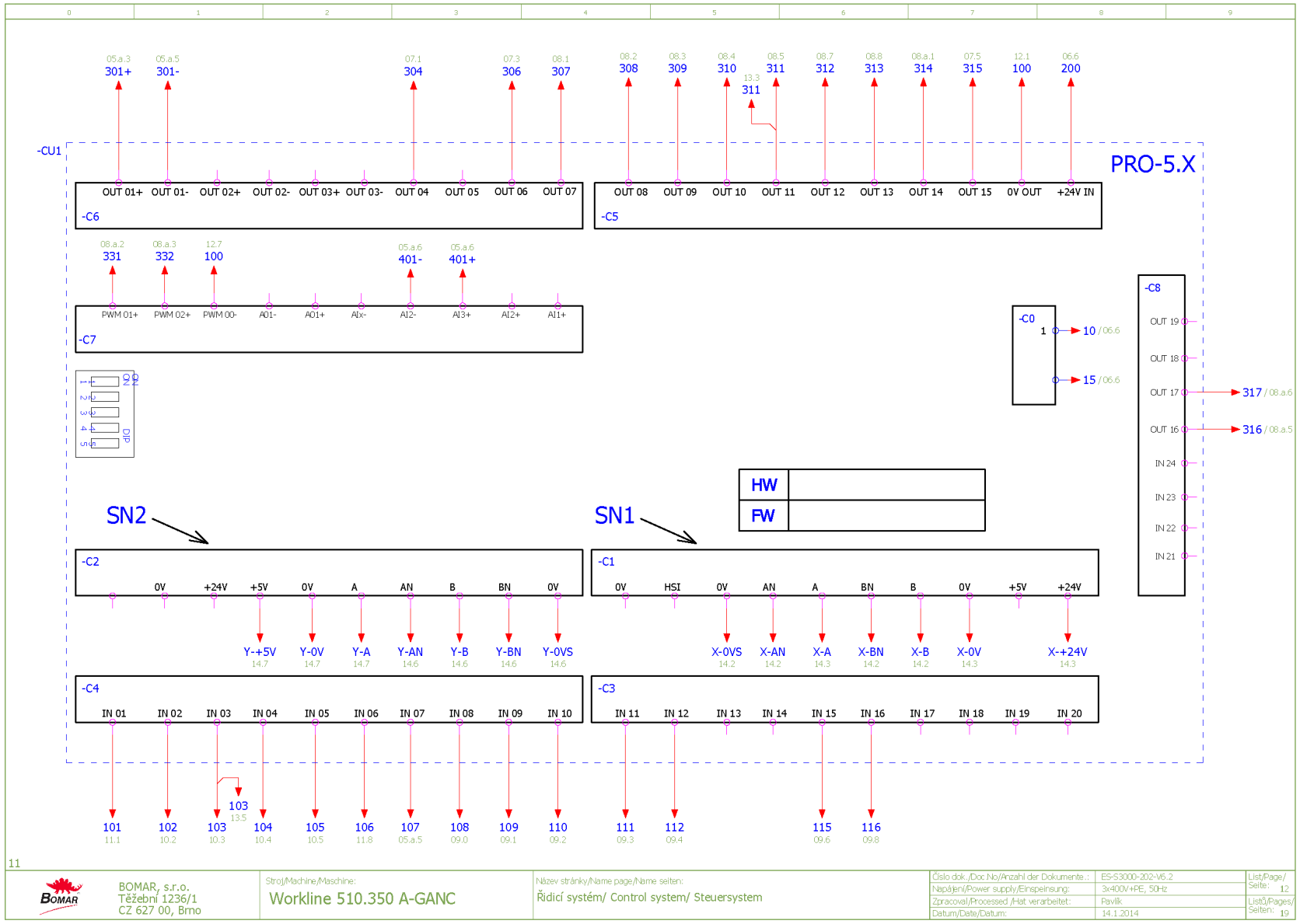
-CU1
PRO-5.X
-C6
OUT 01+ OUT 01- OUT 02+ OUT 02- OUT 03+ OUT 03- OUT 04 OUT 05 OUT 06 OUT 07
-C5
OUT 08 OUT 09 OUT 10 OUT 11 OUT 12 OUT 13 OUT 14 OUT 15 0V OUT +24V IN
-C7
PWM 01+ PWM 02+ PWM 00- AO1- AO1+ AIx- AI2- AI3+ AI2+ AI1+
-C8
OUT 19 OUT 18 OUT 17 OUT 16 IN 24 IN 23 IN 22 IN 21
-C0
SN2
SN1
HW
FW
-C2
0V +24V +5V 0V A AN B BN 0V
-C1
0V HSI 0V AN A BN B 0V +5V +24V
Y-+5V Y-0V Y-A Y-AN Y-B Y-BN Y-0VS
X-0VS X-AN X-A X-BN X-B X-0V X-+24V
-C4
IN 01 IN 02 IN 03 IN 04 IN 05 IN 06 IN 07 IN 08 IN 09 IN 10
-C3
IN 11 IN 12 IN 13 IN 14 IN 15 IN 16 IN 17 IN 18 IN 19 IN 20
BOMAR, s.r.o.
Těžební 1236/1
CZ 627 00, Brno
Stroj/Machine/Maschine:
Workline 510.350 A-GANC
Název stránky/Name page/Name seiten:
Řídicí systém/ Control system/ Steuersystem
Číslo dok./Doc.No/Anzahl der Dokumente.: ES-S3000-202-V6.2
Napájení/Power supply/Einspeisung: 3x400V+PE, 50Hz
Zpracoval/Processed /Hat verarbeitet: Pavlík
Datum/Date/Datum: 14.1.2014
List/Page/Seite: 12
Listů/Pages/Seiten: 19

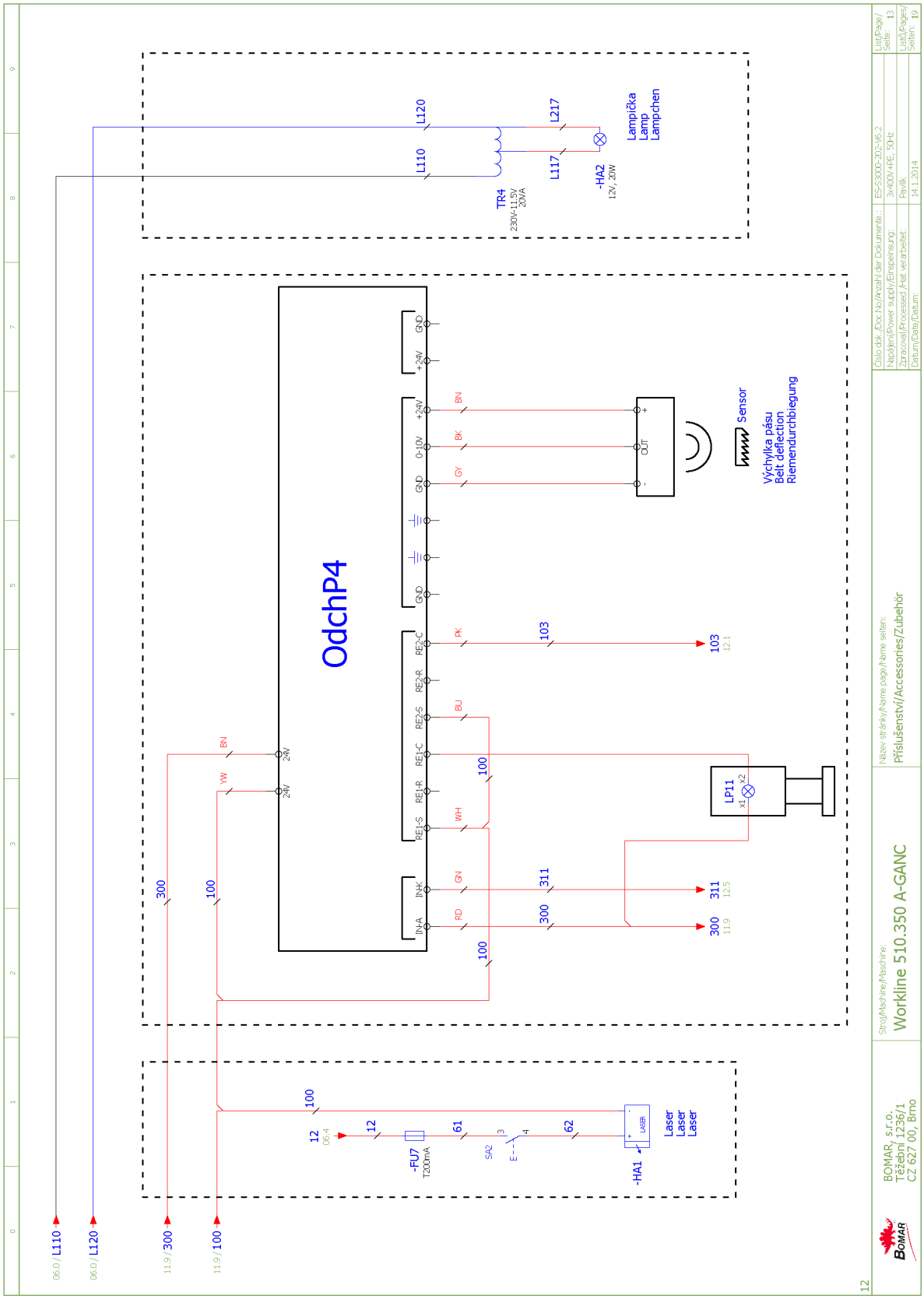
OdchP4
IN-A
IN-K
RE1-S
RE1-R
RE1-C
RE2-S
RE2-R
RE2-C
GND
0-10V
+24V
OUT
Sensor
Výchylka pásu
Belt deflection
Riemendurchbiegung
LP11
TR4
230V-115V
250VA
L110
L120
L117
L217
-HA2
12V, 20W
Lampička
Lamp
Lampchen
-FU7
T200mA
SA2
-HA1
LASER
Laser
Laser
Laser
BOMAR, s.r.o.
Těžební 1236/1
CZ 627 00, Brno
Stroj/Machine/Maschine:
Workline 510.350 A-GANC
Název stránky/Name page/Name seiten:
Příslušenství/Accessories/Zubehör
E5-S3000-202-V6.2
3x400V+PE, 50Hz
Pavlík
14.1.2014
List/Page/Seite: 13
List/Pages/Seiten: 19

SN1

ELGO	
+	HNĚDÁ BROWN BRAUN
-	BÍLÁ WHITE WEIS
A	ZELENÁ GREEN GRÜN
AN	FIALOVÁ VIOLET VIOLET
B	ŽLUTÁ YELLOW GELB
BN	ORANŽOVÁ ORANGE ORANGE
0VS	ČERNÁ BLACK SCHWARZ

SN2

Senzor polohy ramene Sawframe position sensor Rahmenposition sensor	
+	HNĚDÁ BROWN BRAUN
-	ŠEDÁ GREY GRAU
A	RŮŽOVÁ PINK ROSA
AN	ZELENÁ GREEN GRÜN
B	ŽLUTÁ YELLOW GELB
BN	BÍLÁ WHITE WEIS
0VS	ČERNÁ BLACK SCHWARZ

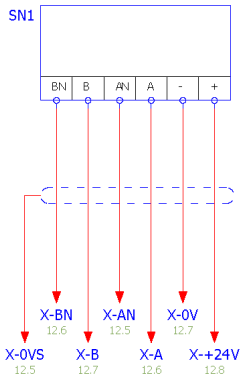

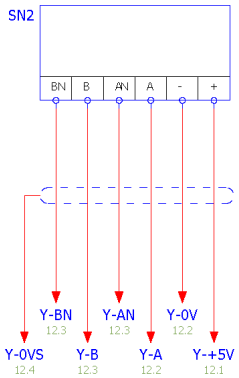

13

BOMAR, s.r.o. Těžební 1236/1 CZ 627 00, Brno	Stroj/Machine/Maschine: Workline 510.350 A-GANC	Název stránky/Name page/Name seiten: Zapojení snímačů/Conection of sensors/Sensoranschluss	Číslo dok./Doc.No/Anzahl der Dokumente.: ES-S3000-202-V6.2 Napájení/Power supply/Einspeisung: 3x400V+PE, 50Hz Zpracoval/Processed /Hat verarbeitet: Pavlík Datum/Date/Datum: 14.1.2014	List/Page/Seite: 14 Listů/Pages/Seiten: 19

6.3. Elektrické schema / Elektroschema / Electric scheme – 3×230 V, PE, 50 Hz

Obsah/ Table of contents/ Inhaltsverzeichnis

Stránka/Page/Seite	Název stránky/Name page/Name Seite	/Date Datum/Date/Datum
00	Úvodní strana/Start page/Startseite	14.1.2014
01	Obsah/ Table of contents/ Inhaltsverzeichnis	14.1.2014
02	Rozmístění prvků v rozvaděči RS1/ Placement of elements in enclosure RS1/ Platzierung der Elemente im Schaltschrank RS1	14.1.2014
03	Ovládací panel OP1/Control panel OP1/Bedienpult OP1	14.1.2014
04	Kusovník artiklů/ Parts list/ Artikelstückliste	14.1.2014
04.a	Kusovník artiklů/ Parts list/ Artikelstückliste	14.1.2014
04.b	Kusovník artiklů/ Parts list/ Artikelstückliste	14.1.2014
05	Silová část M1,M2/Power part M1,M2/Feld partie M1,M2	14.1.2014
05.a	Silová část M3/Power part M3/Feld partie M3	14.1.2014
06	Deska zdroje/Power board/Netzgerat-Platte	14.1.2014
07	Stykače motorů, M4/Motor contactor, M4/Motor-Schutzschalter, M4	14.1.2014
08	Hydraulické ventily/Hydraulic valve/Hydroventil	14.1.2014
08.a	Hydraulické ventily/Hydraulic valve/Hydroventil	14.1.2014
09	Vstupy/Inputs/Eingänge	14.1.2014
10	Tlačítka ovládací panel OP1/ Button control panel OP1/ Taste Bedienpult OP1	14.1.2014
11	Bezpečnostní okruh/Safety circle/Sicherheitsbereich	14.1.2014
12	Řidicí systém/ Control system/ Steuersystem	14.1.2014
13	Příslušenství/Accessories/Zubehör	14.1.2014
14	Zapojení snímačů/Conection of sensors/Sensoranschluss	14.1.2014

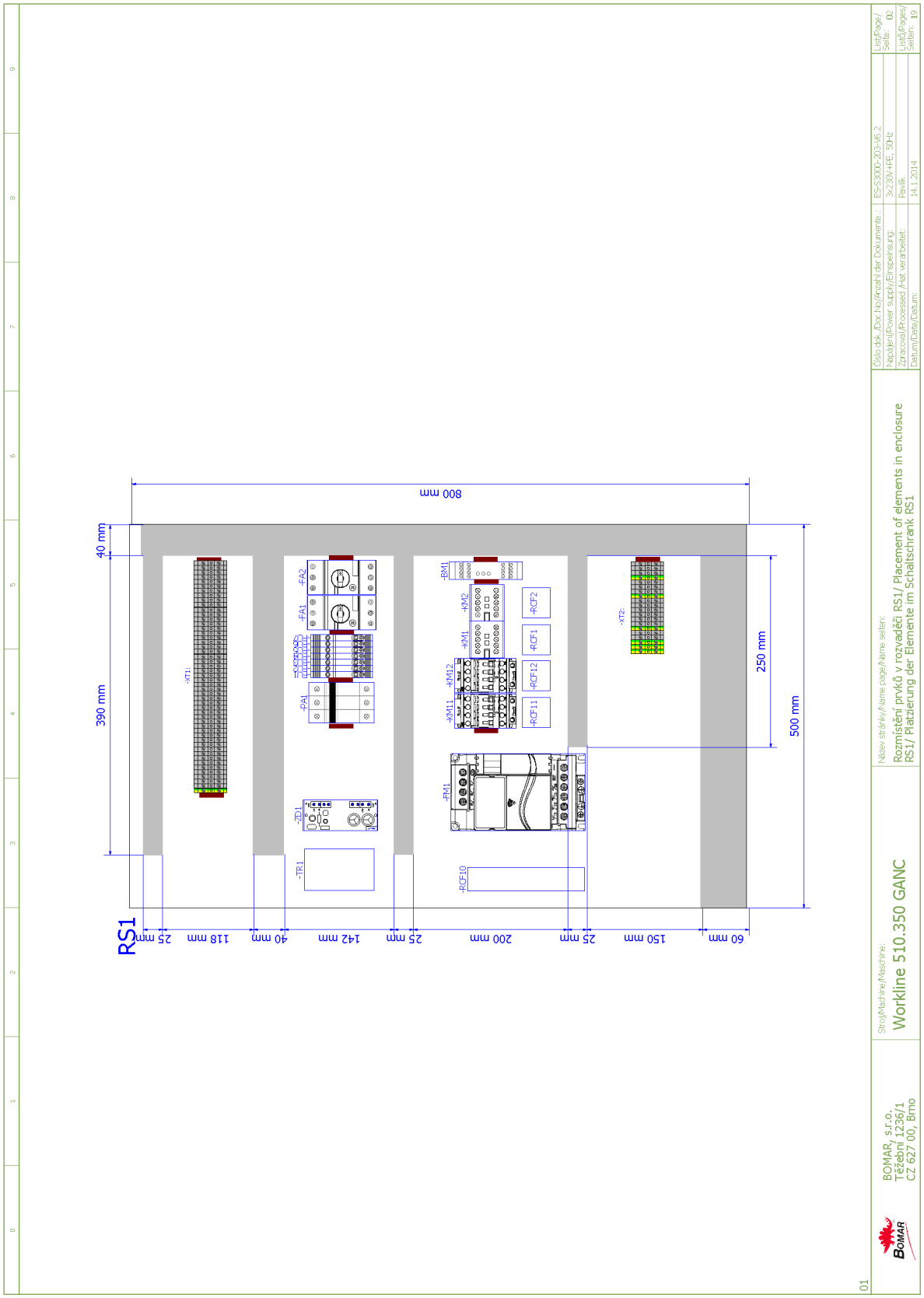
RS1
800 mm
40 mm
390 mm
250 mm
500 mm
25 mm
118 mm
40 mm
142 mm
25 mm
200 mm
25 mm
150 mm
60 mm
-XT1:
-FA1
-FA2
-PA1
-ZD1
-TR1
-FM1
-RCF10
-KM11
-KM12
-KM1
-KM2
-BM1
-RCF11
-RCF12
-RCF1
-RCF2
-XT2:
01
BOMAR, s.r.o.
Těžební 1236/1
CZ 627 00, Brno
Stroj/Machine/Maschine:
Workline 510.350 GANC
Název stránky/Name page/Name seiten:
Rozmístění prvků v rozvaděči RS1/ Placement of elements in enclosure
RS1/ Platzierung der Elemente im Schaltschrank RS1
Číslo dok./Doc.No/Anzahl der Dokumente:
ES-S300-203-V6.2
Napájení/Power supply/Einspeisung:
3x230V+PE, 50Hz
Zpracoval/Processed /-hat verarbeitet:
Pavlík
Datum/Date/Datum:
14.1.2014
List/Page/Seite: 02
List(s)/Pages/Seiten: 19

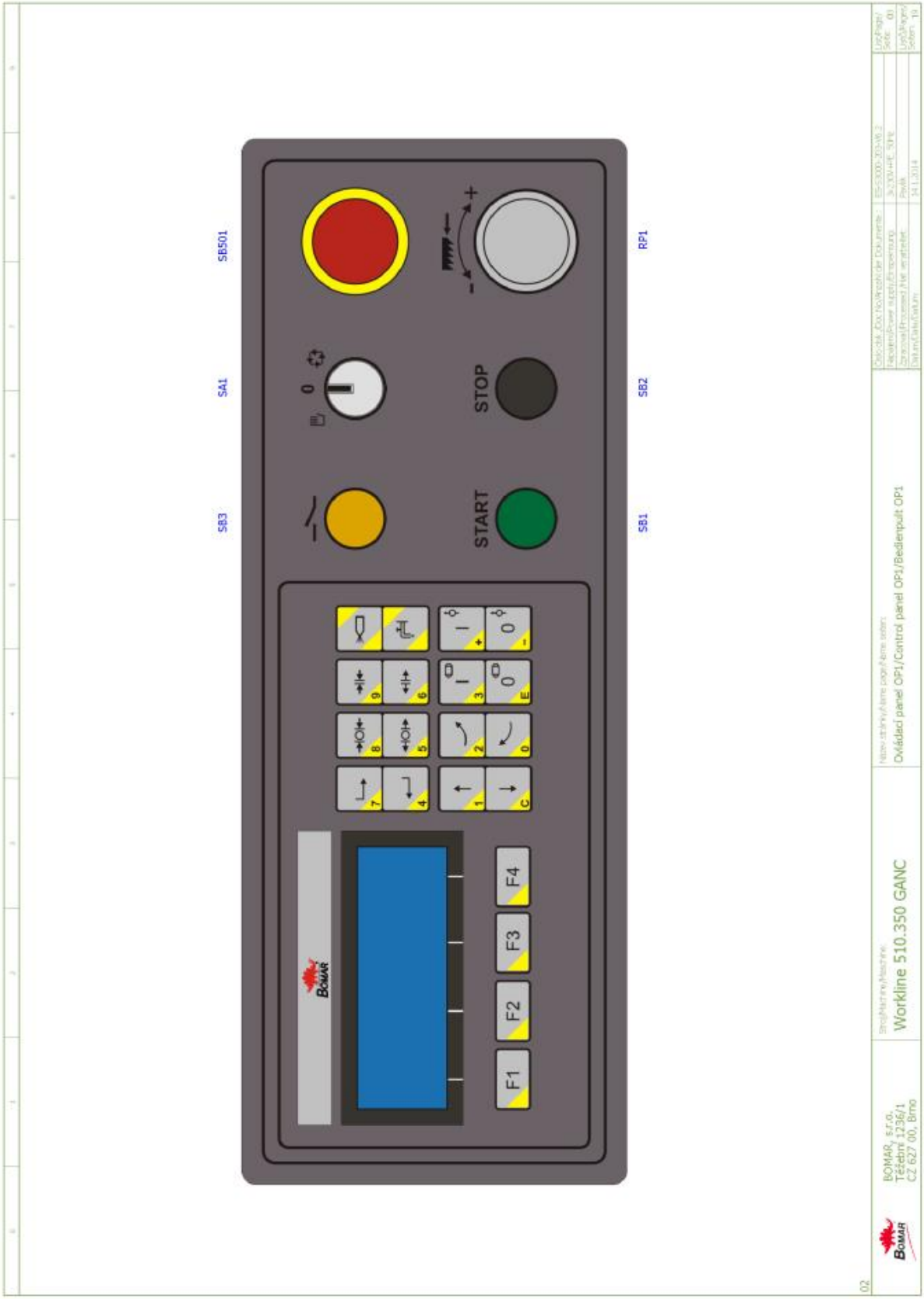
SB501
SA1
SB3
STOP
START
RP1
SB2
SB1
F1
F2
F3
F4
BOMAR
Workline 510.350 GANC
Ovládací panel OP1/Control panel OP1/Bedienpult OP1
BOMAR, s.r.o.
Třebíční 1236/1
CZ 627 00, Brno

Parts list

Device identification	Device description	Type number	Manufacturer	Part number	Quantity	Location (page.column)
-ZD1	Power supply unit - 15VAC/24VDC; 20VAC/28VDC	ZDR-03	Bomar	265.915	1	/06.3
-CU1	Touch-sensitive keyboard	31.R230-207	AKI ELECTRONIC,spol.s.r.o.	31.R230-207	1	/12.0
-FA1	Auxiliary Contact Block - 1xNO+1xNC	HKF1-11	ABB	91.046.002	1	/05.4
-FA2	Auxiliary Contact Block - 1xNO+1xNC	HKF1-11	ABB	91.046.002	1	/05.7
-HL1	Green light for Eaton adapter	M22-LED-G	EATON	91.061.023	1	/08.a.5
-HL2	White light for Eaton adapter	M22-LED-W	EATON	91.061.034	1	/11.7
-SB3	Yellow translucent switch head	M22-DL-Y	EATON	91.060.053	1	/11.3
=OP1-SB1	Green translucent switch head	M22-DL-G	EATON	91.060.031	1	/10.2
=OP1-SB3	Head of 3 positional switch	M22-WRK3	EATON	91.060.051	1	/10.4
-FU1	Tube fuse - 2A/250V, slow, 5x20	T2A/250V	ESKA	91.230.001	1	/06.1
-FU2	Tube fuse - 2A/250V, slow, 5x20	T2A/250V	ESKA	91.230.001	1	/06.1
-FU3	Tube fuse - 500mA/250V, slow, 5x20	T500mA/250V	ESKA	91.230.011	1	/06.5
-FU6	Tube fuse - 6,3A/250V, slow, 5x20	T6,3A/250V	ESKA	91.230.002	1	/06.5
-FU7	Tube fuse - 200mA/250V, slow, 5x20	T200mA/250V	ESKA	91.230.037	1	/13.1
-RP1	Potenciometr 4k7	TP195 4k7/N20A	GES-ELECTRONICS, a.s.	91.283.015	1	/05.a.5
-RP1	Potentiometer knob - 24mm	S8877 BLK	GES-ELECTRONICS, a.s.	91.060.063	1	/05.a.5
-RCF1	RCF filter	FBOPR1624	Ing. Miroslav Vlček	91.041.015	1	/05.3
-RCF2	RCF filter	FBOPR1624	Ing. Miroslav Vlček	91.041.015	1	/05.6
-RCF11	RCF filter	FBOPR1624	Ing. Miroslav Vlček	91.041.015	1	/05.a.0
-RCF12	RCF filter	FBOPR1624	Ing. Miroslav Vlček	91.041.015	1	/05.a.0
-BM1	Safety relay - 3xNO	CS AR-02M024	PIZZATO	91.051.034	1	/11.5
-FA1	Manual motor starter - 0.63A	MS116-0,63	ABB	91.045.018	1	/05.4
-FA2	Manual motor starter - 6.3A	MS116-6,3	ABB	91.045.023	1	/05.7
-FU1	Fuse terminal	WK4/THSi5U	WIELAND	91.251.102	1	/06.1
-FU2	Fuse terminal	WK4/THSi5U	WIELAND	91.251.102	1	/06.1
-FU3	Fuse terminal	WK4/THSi5U	WIELAND	91.251.102	1	/06.5
-FU4	Fuse terminal	WK4/THSi5U	WIELAND	91.251.102	1	/06.5
-FU4	Tube fuse - 800mA/250V, slow, 5x20	T800mA/250V	ESKA	91.230.010	1	/06.5

The manufacturer reserves right to use an equivalent replacement device.

03

Parts list

Device identification	Device description	Type number	Manufacturer	Part number	Quantity	Location (page.column)
-FU5	Fuse terminal	WK4/THSi5U	WIELAND	91.251.102	1	/06.5
-FU5	Tube fuse - 1A/250V, slow, 5x20	T1A/250V	ESKA	91.230.031	1	/06.5
-FU6	Fuse terminal	WK4/THSi5U	WIELAND	91.251.102	1	/06.5
-KM1	Minicontactor - 4kW/400V, 3P	B6S-30-01-1.7-71	ABB	91.040.049	1	/07.1
-KM2	Minicontactor - 4kW/400V, 3P	B6S-30-01-1.7-71	ABB	91.040.049	1	/07.3
-KM11	Contactor - 5,5kW/400V, 3P	AF12-30-01-11	ABB	91.040.051	1	/11.7
-KM12	Contactor - 5,5kW/400V, 3P	AF12-30-01-11	ABB	91.040.051	1	/11.8
-PA1	Fuse switch disconnector E-90 - 3P	E 93/32	ABB	91.241.014	1	/05.a.1
-QS1	Disconnector - 3P,40A	OT40FT3	ABB	91.170.019	1	/05.0
-QS1	Handle switch - black	OHBS2RJ	ABB	91.180.015	1	/05.0
-RP1	Fastconnect clamp	WAGO 224-112	WIELAND	91.250.009	3	/05.a.5
-SB3	NO contact for Eaton adapter	M22-K10	EATON	91.061.022	1	/11.3
-SB501	Emergency-stop mushroom push - button + 3xNC	YW1B-V4E02R	IDEC	91.060.084	1	/11.1
=OP1-SB1	Attaching adapter + 1NO	M22-AK10	EATON	91.061.021	1	/10.2
=OP1-SB2	Attaching adapter + 1NO	M22-AK10	EATON	91.061.021	1	/10.3
=OP1-SB2	Switch head - black	M22-D-S	EATON	91.060.035	1	/10.3
=OP1-SB3	NO contact for Eaton adapter	M22-K10	EATON	91.061.022	1	/10.4
=OP1-SB3	Attaching adapter + 1NO	M22-AK10	EATON	91.061.021	1	/10.4
-TR1	Toroidal transformer - 0-230-400V/20V/15V, 0.65-0.38A/6A/2A, 150VA	1502304002015	KARBAN s.r.o.	91.080.026	1	/06.1
-SQ8	Safety limit switch - 2xNC	QKS8	KEDU	91.173.012	1	/11.1
-PA1	Cylindric fuse - 25A, 10x38 fast, gG charakteristic	PV10 25A gG	OEZ	91.230.021	3	/05.a.1
-SQ3	Limit switch - 1NC+1NO, M20, slow	D4N-4A32	OMRON	91.173.010	1	/09.2
-SQ11	Limit switch - 1NC+1NO	D4N-4A31	OMRON	91.173.007	1	/09.8
-SQ4	Limit switcher - 2NC, roller on doors(right), M2, slow action	FR 34C1-M2	PIZZATO	91.173.021	1	/09.3
-SQ5	Limit switch - 1NO + 1NC, roller, M2, snap action	FR 605-M2	PIZZATO	91.173.009	1	/09.4
-LQ1.A	Sensor cable	MOD.14/4 M12 SL LC10	SICK	91.142.001	1	/09.5
-LQ1.B	Sensor cable	MOD.15/4 M12 SL LC10	SICK	91.142.002	1	/09.6
-QS1	Terminal shroud	OTS40T3	ABB	91.170.017	1	/05.0

The manufacturer reserves right to use an equivalent replacement device.

04

0 1 2 3 4 5 6 7 8 9

Parts list

Device identification	Device description	Type number	Manufacturer	Part number	Quantity	Location (page.column)
-CU1	Control circuit	PRO-5.X	Bomar	265.917	1	/12.0
-FM1	AC motor drive - 3.7kW, 3x230VAC	VFD037EL23A	DELTA ELECTRONICS, INC.	91.012.096	1	/05.a.1
-RCF10	RCF filter - 5.5 kW, 3x400V, 25A	ATV31/5,5KW	Ing. Miroslav Vlček	91.041.027	1	/05.a.1
-FU7	Fuse terminal	WK4/THSi5U	WIELAND	91.251.102	1	/13.1
-M4	Fan 24VDC, 154CFM	RDH1238 B2	Xinruilian Electronic Co.	91.015.126	1	/05.a.8

The manufacturer reserves right to use an equivalent replacement device.

04.a

BOMAR, s.r.o. Těžební 1236/1 CZ 627 00, Brno	Stroj/Machine/Maschine: Workline 510.350 GANC	Název stránky/Name page/Name seiten: Kusovník artiklů/ Parts list/ Artikelstückliste	Číslo dok./Doc.No/Anzahl der Dokumente.: ES-S3000-203-V6.2 Napájení/Power supply/Einspeinsung: 3x230V+PE, 50Hz Zpracoval/Processed /Hat verarbeitet: Pavlík Datum/Date/Datum: 14.1.2014	List/Page/Seite: 04 b Listů/Pages/Seiten: 19	

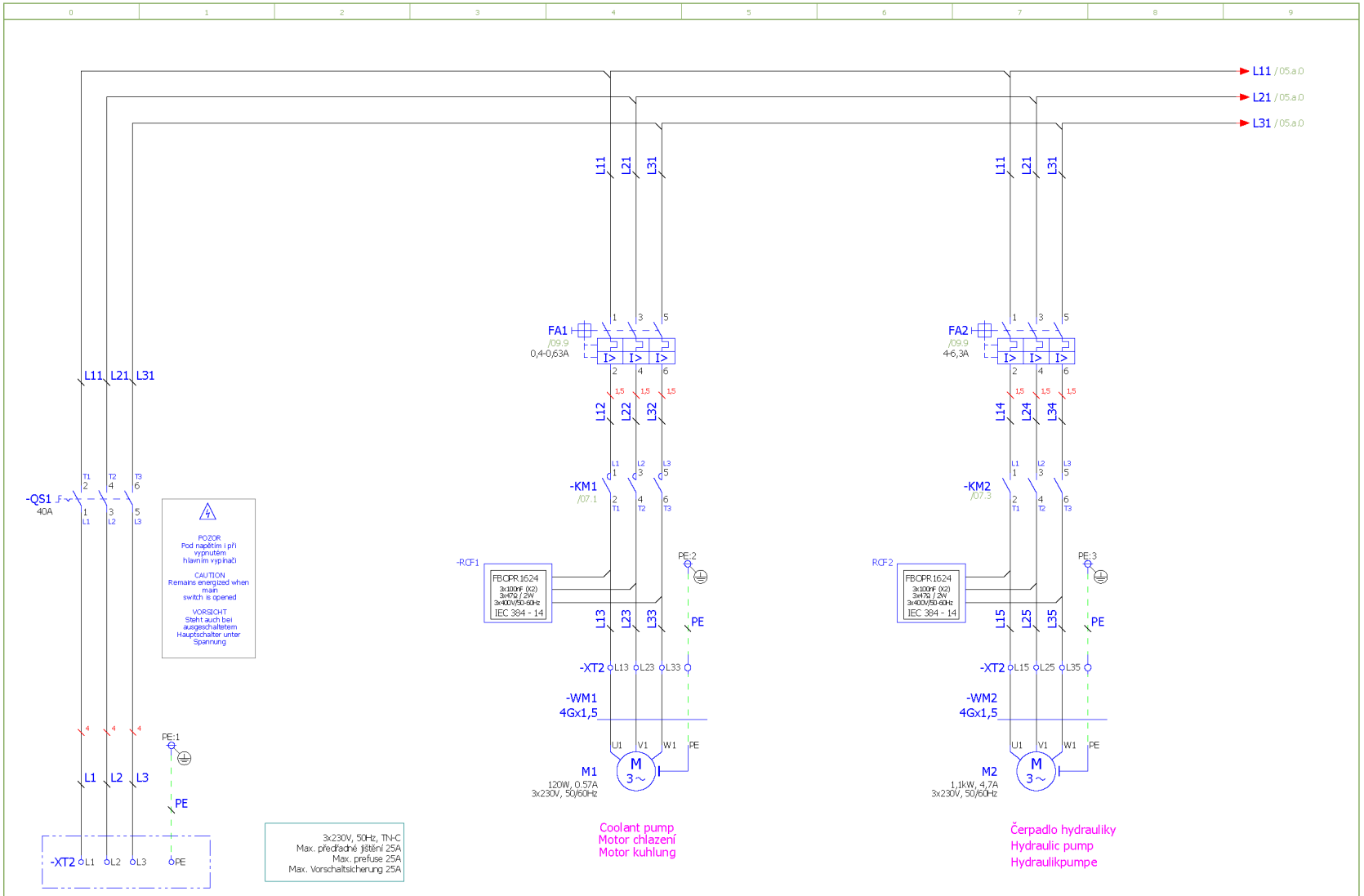

04.b

BOMAR, s.r.o. Těžební 1236/1 CZ 627 00, Brno	Stroj/Machine/Maschine: Workline 510.350 GANC	Název stránky/Name page/Name seiten: Silová část M1,M2/Power part M1,M2/Feld partie M1,M2	Číslo dok./Doc.No/Anzahl der Dokumente.: ES-S3000-203-V6.2 Napájení/Power supply/Einspeinsung: 3x230V+PE, 50Hz Zpracoval/Processed /Hat verarbeitet: Pavlík Datum/Date/Datum: 14.1.2014	List/Page/Seite: 05 Listů/Pages/Seiten: 19

Schémata
Schemas
Schematics

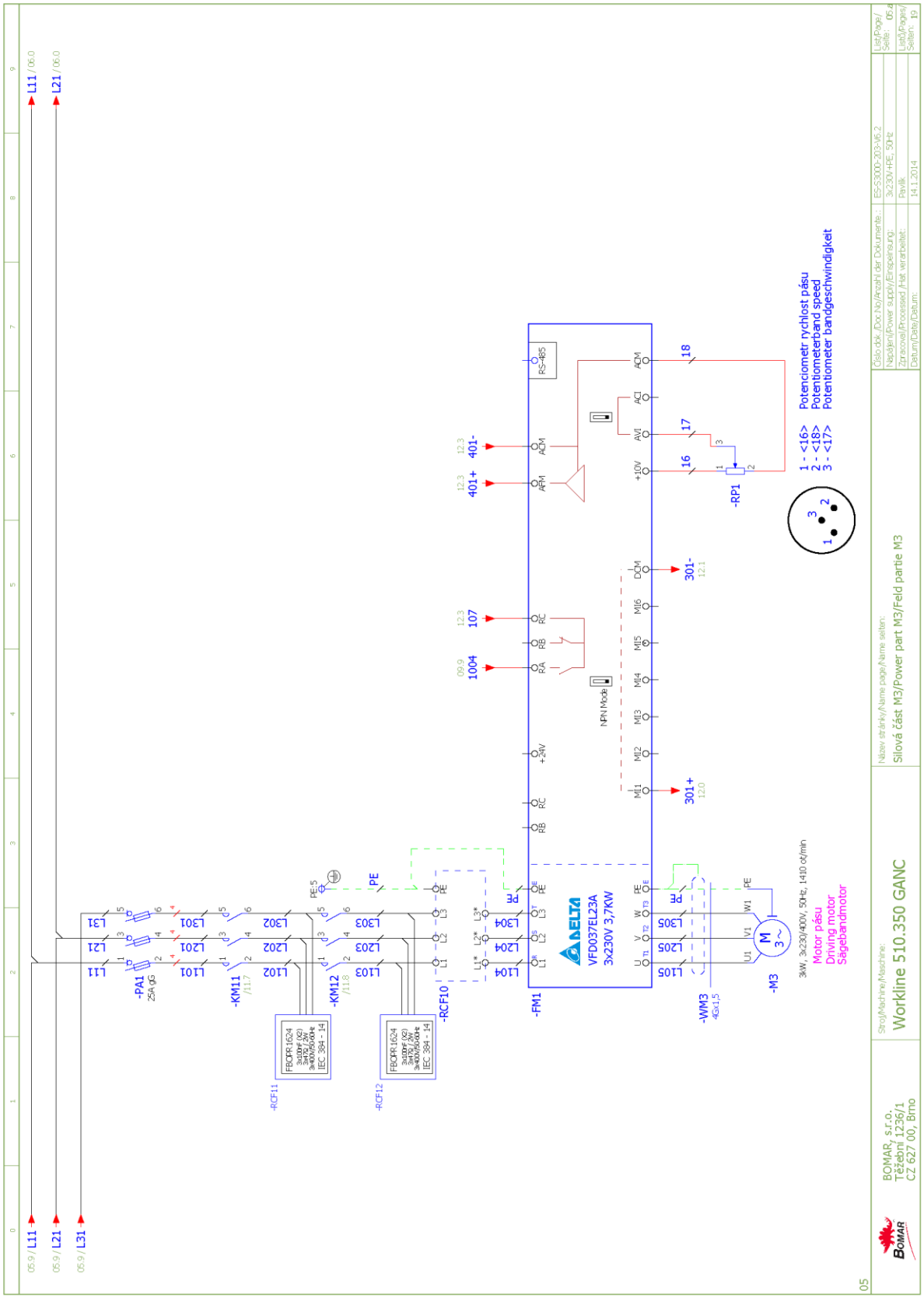
L11 / 06.0
L21 / 06.0
05.9 / L11
05.9 / L21
05.9 / L31
-PA1
25A gG
-KM11
/11.7
-KM12
/11.8
-RCF11
-RCF12
-RCF10
PE
-FM1
DELTA
VFD037EL23A
3x230V 3,7KW
NPN Mode
RS-485
401+
401-
1004
107
301+
301-
-RP1
1 - <16>
2 - <18>
3 - <17>
Potenciometr rychlost pásu
Potentiometerband speed
Potentiometer bandgeschwindigkeit
-WM3
4G×1,5
-M3
3kW, 3x230/400V, 50Hz, 1410 ot/min
Motor pásu
Driving motor
Sägebandmotor
BOMAR, s.r.o.
Těžební 1236/1
CZ 627 00, Brno
Stroj/Machine/Maschine:
Workline 510.350 GANC
Název stránky/Name page/Name seiten:
Silová část M3/Power part M3/Feld partie M3
Číslo dok. /Doc.No/Anzahl der Dokumente:
ES-S3000-203-V6.2
Napájení/Power supply/Einspeisung:
3x230/+PE, 50Hz
Zpracoval/Processed /Hat verarbeitet:
Pavlík
Datum/Date/Datum:
14.1.2014
List/Page/Seite:
05.4
List(s)/Pages/Seiten:
19
05

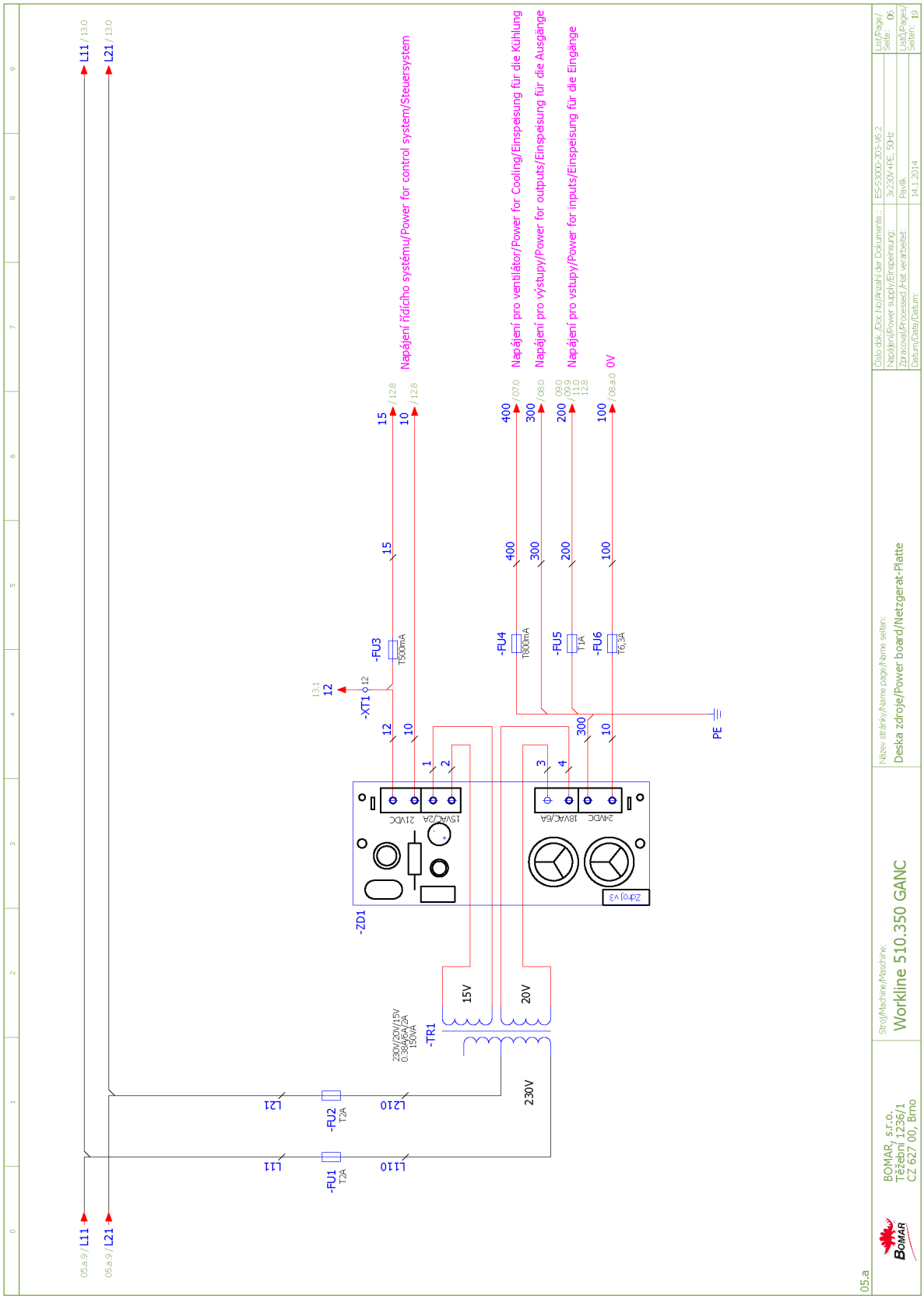
Napájení řídicího systému/Power for control system/Steuersystem
Napájení pro ventilátor/Power for Cooling/Einspeisung für die Kühlung
Napájení pro výstupy/Power for outputs/Einspeisung für die Ausgänge
Napájení pro vstupy/Power for inputs/Einspeisung für die Eingänge
0V
PE
-XT1
-FU1 T2A
-FU2 T2A
-FU3 T500mA
-FU4 T800mA
-FU5 T1A
-FU6 T6,3A
-TR1
230V/20V/15V 0.39A/6A/2A 150VA
-ZD1
15VAC/2A 21DC
18VAC/6A 24VDC
Zdroj v3
230V
15V
20V
L11 / 13.0
L21 / 13.0
05.a9 / L11
05.a9 / L21
Číslo dok./Doc.No./Kreslí der Dokumente: ES-S3000-203-V6.2
List/Page/Seite: 06
Napájení/Power supply/Einspeisung: 3x230V+PE, 50Hz
List(s)/Pages/Seiten: 19
Zpracoval/Processed /Hat verarbeitet: Pavlík
Datum/Date/Datum: 14.1.2014
Název stránky/Name page/Name seiten:
Deska zdroje/Power board/Netzgerat-Platte
Stroj/Machine/Maschine:
Workline 510.350 GANC
BOMAR, s.r.o.
Těžební 1236/1
CZ 627 00, Brno
05.a

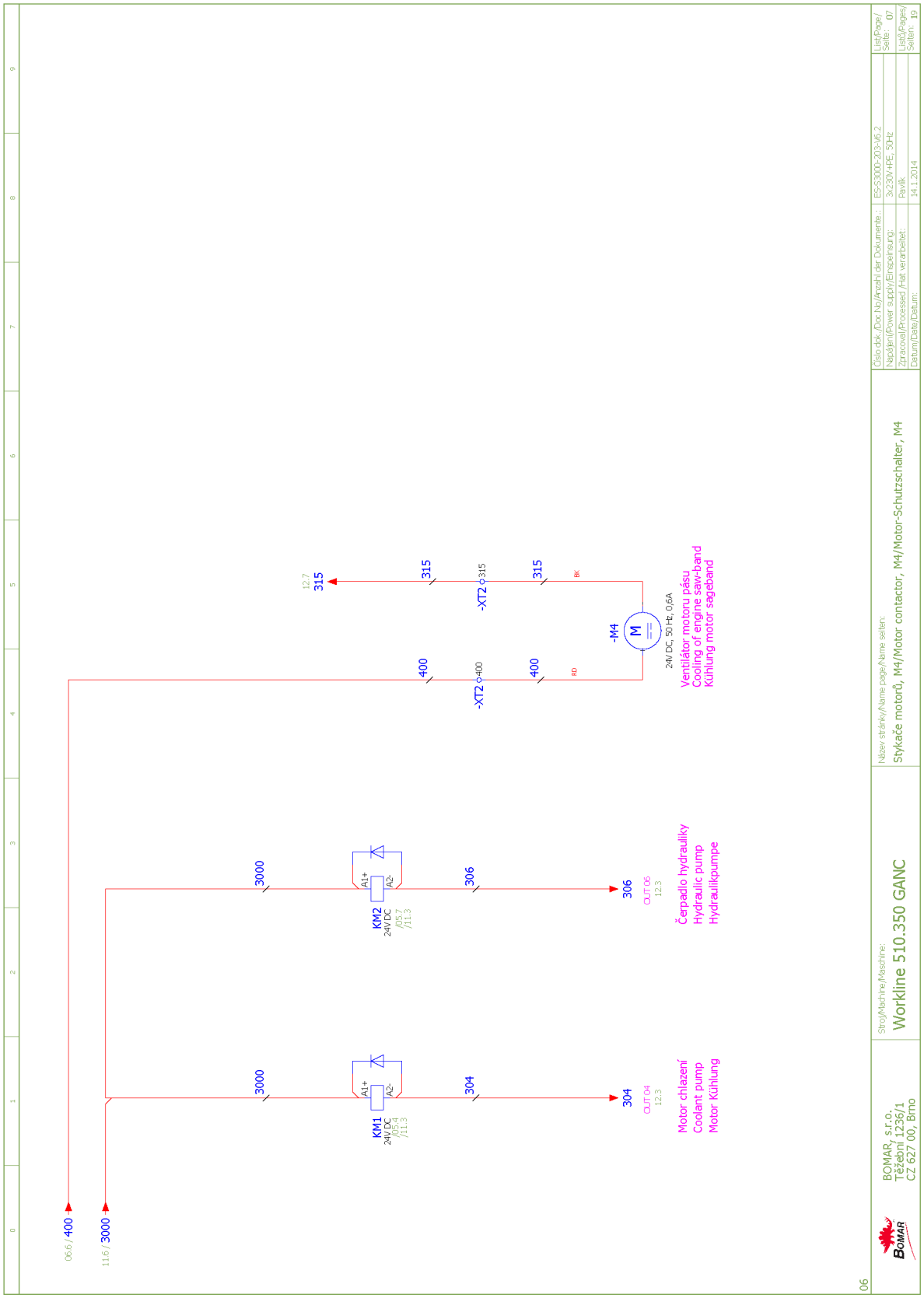
06.6 / 400
116 / 3000
3000
KM1
24V DC
/05.4
/11.3
A1+
A2-
304
OUT 04
12.3
Motor chlazení
Coolant pump
Motor Kühlung
3000
KM2
24V DC
/05.7
/11.3
A1+
A2-
306
OUT 06
12.3
Čerpadlo hydrauliky
Hydraulic pump
Hydraulikpumpe
12.7
315
315
-XT2
315
315
400
-XT2
400
400
-M4
M
24V DC, 50 Hz, 0,6A
Ventilátor motoru pásu
Cooling of engine saw-band
Kühlung motor segeband
Číslo dok./Doc.No./Anzahl der Dokumente:
E5-S3000-203-V6.2
Napájení/Power supply/Einspeisung:
3x230V+PE, 50Hz
Zpracoval/Processed /Hat verarbeitet:
Pavlík
Datum/Date/Datum:
14.1.2014
List/Page/
Seite: 07
List(s)/Pages/
Seiten: 19
Název stránky/Name page/Name seiten:
Stykače motorů, M4/Motor contactor, M4/Motor-Schutzschalter, M4
Stroj/Machine/Maschine:
Workline 510.350 GANC
BOMAR, s.r.o.
Těžební 1236/1
CZ 627 00, Brno
06

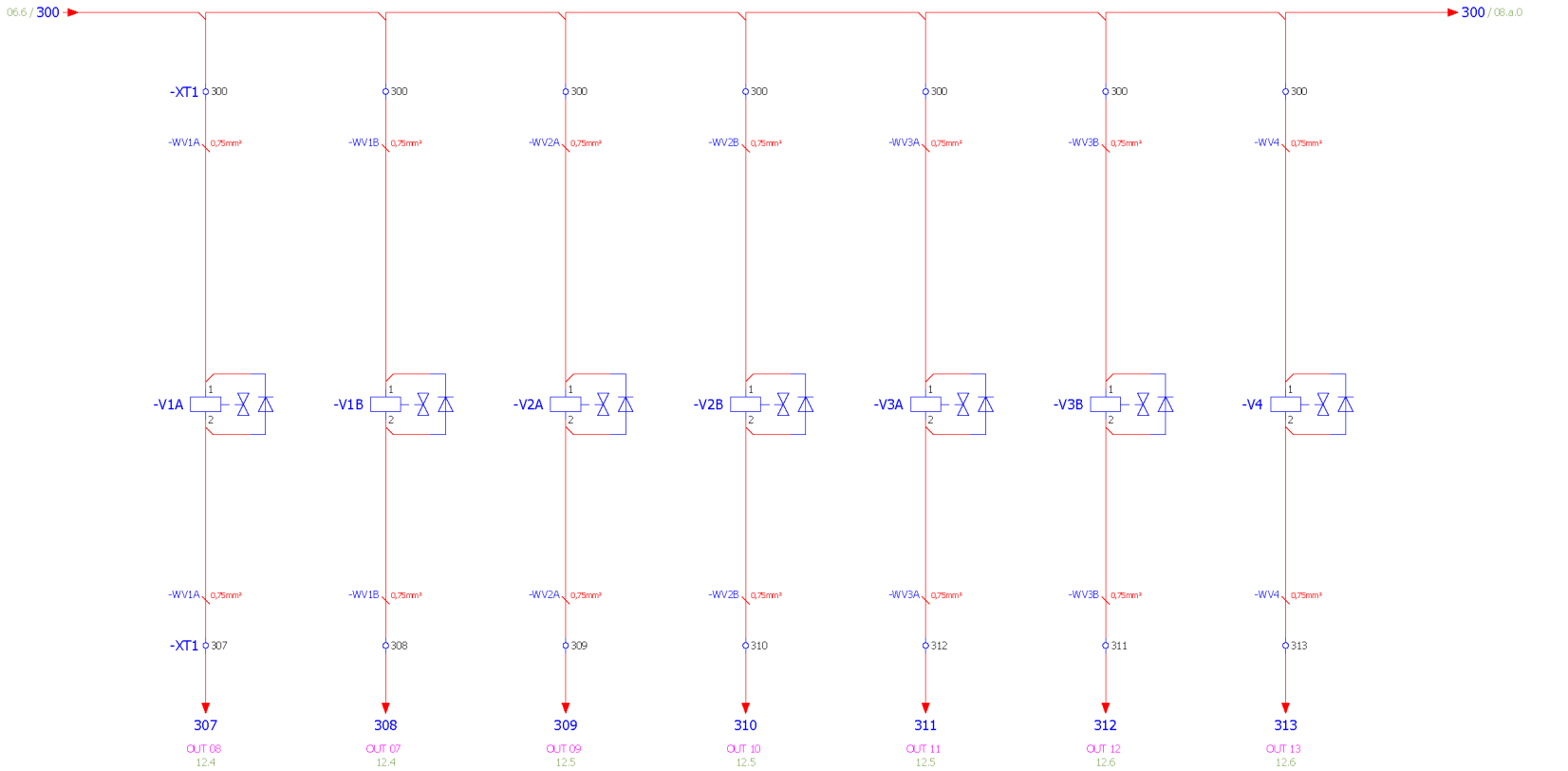

07

BOMAR, s.r.o. Těžební 1236/1 CZ 627 00, Brno	Stroj/Machine/Maschine: Workline 510.350 GANC	Název stránky/Name page/Name seiten: Hydraulické ventily/Hydraulic valve/Hydroventil	Číslo dok./Doc.No/Anzahl der Dokumente.: ES-S3000-203-V6.2 Napájení/Power supply/Einspeisung: 3x230V+PE, 50Hz Zpracoval/Processed /Hat verarbeitet: Pavlík Datum/Date/Datum: 14.1.2014	List/Page/Seite: 08 Listů/Pages/Seiten: 19

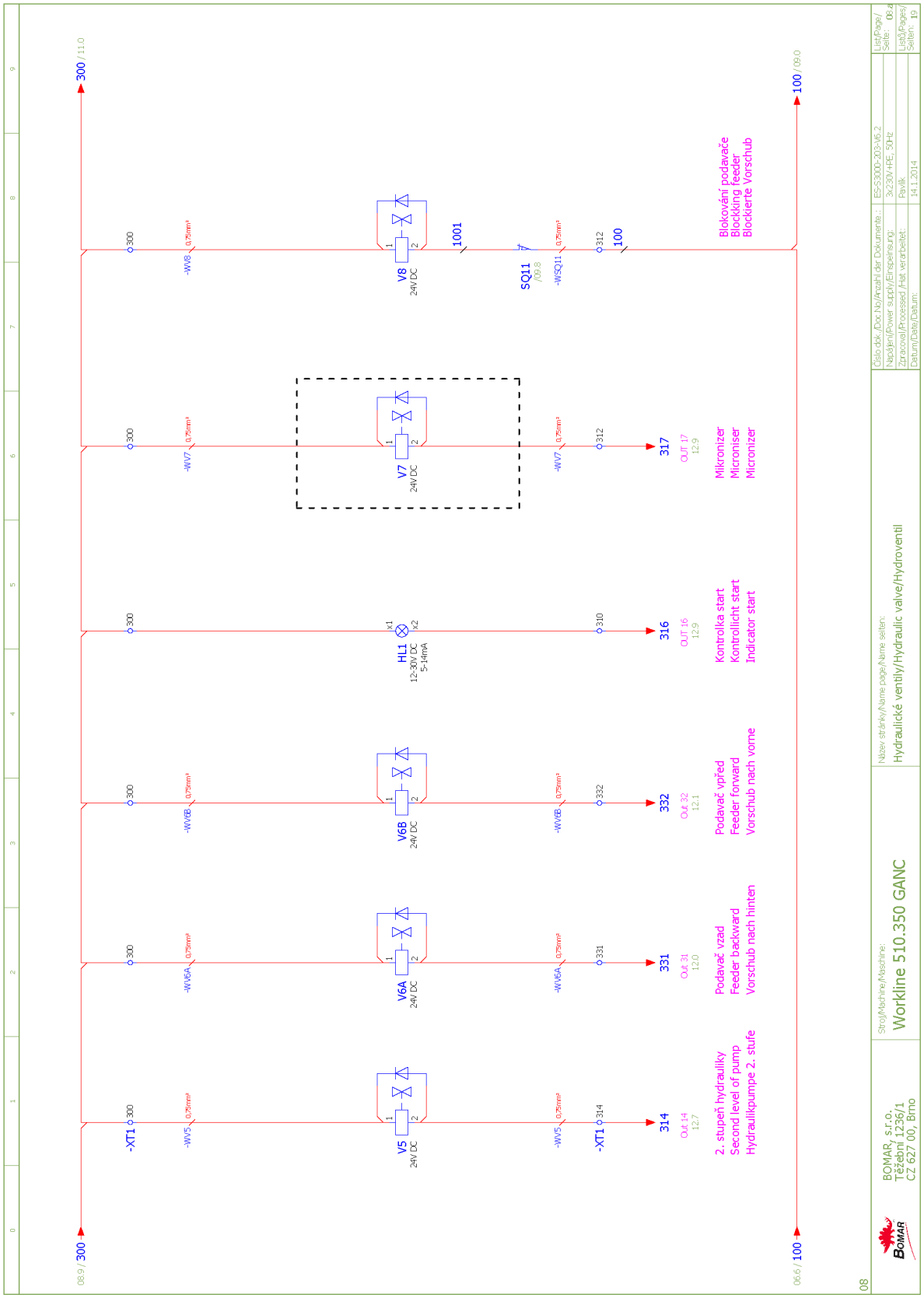
300 / 11.0
08.9 / 300
-XT1
-W V5
0,75mm²
V5
24V DC
-W V6A
V6A
24V DC
-W V6B
V6B
24V DC
HL1
12-30V DC
5-14mA
-W V7
V7
24V DC
-W V8
V8
24V DC
1001
SQ11
/09.8
-W SQ11
100
314
Out 14
12.7
2. stupeň hydraulilky
Second level of pump
Hydraulikpumpe 2. stufe
331
Out 31
12.0
Podavač vzad
Feeder backward
Vorschub nach hinten
332
Out 32
12.1
Podavač vpřed
Feeder forward
Vorschub nach vorne
316
Out 16
12.9
Kontrolka start
Kontrollicht start
Indicator start
317
Out 17
12.9
Mikronizer
Microniser
Micronizer
Blokování podavače
Blockking feeder
Blockierte Vorschub
06.6 / 100
100 / 09.0
08
BOMAR, s.r.o.
Těžební 1236/1
CZ 627 00, Brno
Stroj/Machine/Maschine:
Workline 510.350 GANC
Název stránky/Name page/Name seiten:
Hydraulické ventily/Hydraulic valve/Hydroventil
Číslo dok./Doc.No/Anzahl der Dokumente:
ES-S3000-203-V6.2
Napájení/Power supply/Einspeisung:
3x230V+PE, 50Hz
Zpracoval/Processed /Hat verarbeitet:
Pavlík
Datum/Date/Datum:
14.1.2014
List/Page/Seite:
08.a
List(s)/Pages/Seiten:
19

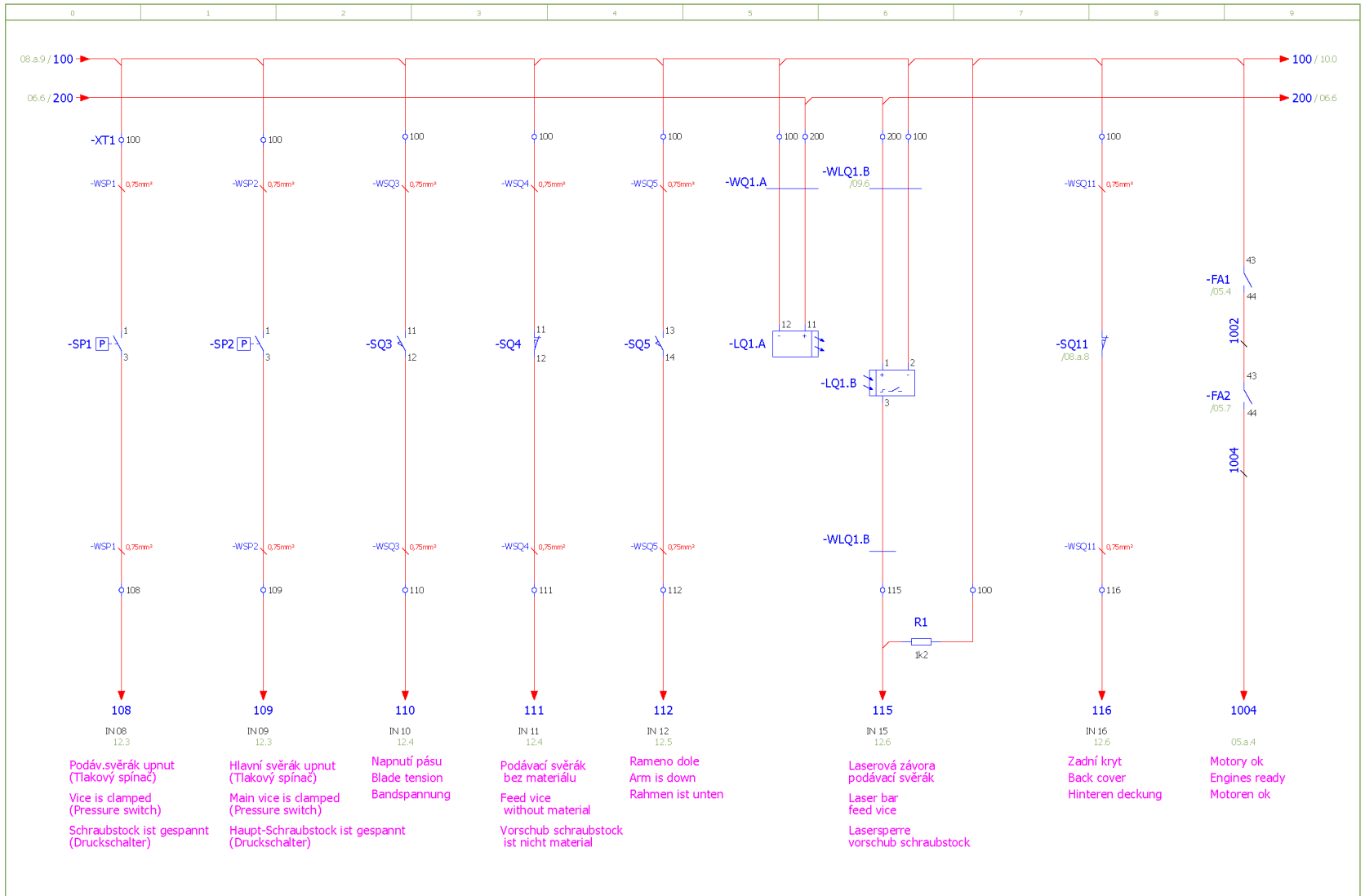
08.a.9 / 100
06.6 / 200
100 / 10.0
200 / 06.6
-XT1
-WSP1
-WSP2
-WSQ3
-WSQ4
-WSQ5
-WQ1.A
-WLQ1.B
/09.6
-WSQ11
-FA1
/05.4
-FA2
/05.7
1002
1004
-SP1
-SP2
-SQ3
-SQ4
-SQ5
-LQ1.A
-LQ1.B
-SQ11
/08.a.8
R1
1k2
0,75mm²
108
109
110
111
112
115
116
1004
IN 08
12.3
IN 09
12.3
IN 10
12.4
IN 11
12.4
IN 12
12.5
IN 15
12.6
IN 16
12.6
05.a.4
Podáv.svěrák upnut
(Tlakový spínač)
Vice is clamped
(Pressure switch)
Schraubstock ist gespannt
(Druckschalter)
Hlavní svěrák upnut
(Tlakový spínač)
Main vice is clamped
(Pressure switch)
Haupt-Schraubstock ist gespannt
(Druckschalter)
Napnutí pásu
Blade tension
Bandspannung
Podávací svěrák
bez materiálu
Feed vice
without material
Vorschub schraubstock
ist nicht material
Rameno dole
Arm is down
Rahmen ist unten
Laserová závora
podávací svěrák
Laser bar
feed vice
Lasersperre
vorschub schraubstock
Zadní kryt
Back cover
Hinteren deckung
Motory ok
Engines ready
Motoren ok
08.a
BOMAR, s.r.o.
Těžební 1236/1
CZ 627 00, Brno
Stroj/Machine/Maschine:
Workline 510.350 GANC
Název stránky/Name page/Name seiten:
Vstupy/Inputs/Eingänge
Číslo dok./Doc.No/Anzahl der Dokumente.:
ES-S3000-203-V6.2
Napájení/Power supply/Einspeisung:
3x230V+PE, 50Hz
Zpracoval/Processed /Hat verarbeitet:
Pavlík
Datum/Date/Datum:
14.1.2014
List/Page/Seite: 09
Listů/Pages/Seiten: 19

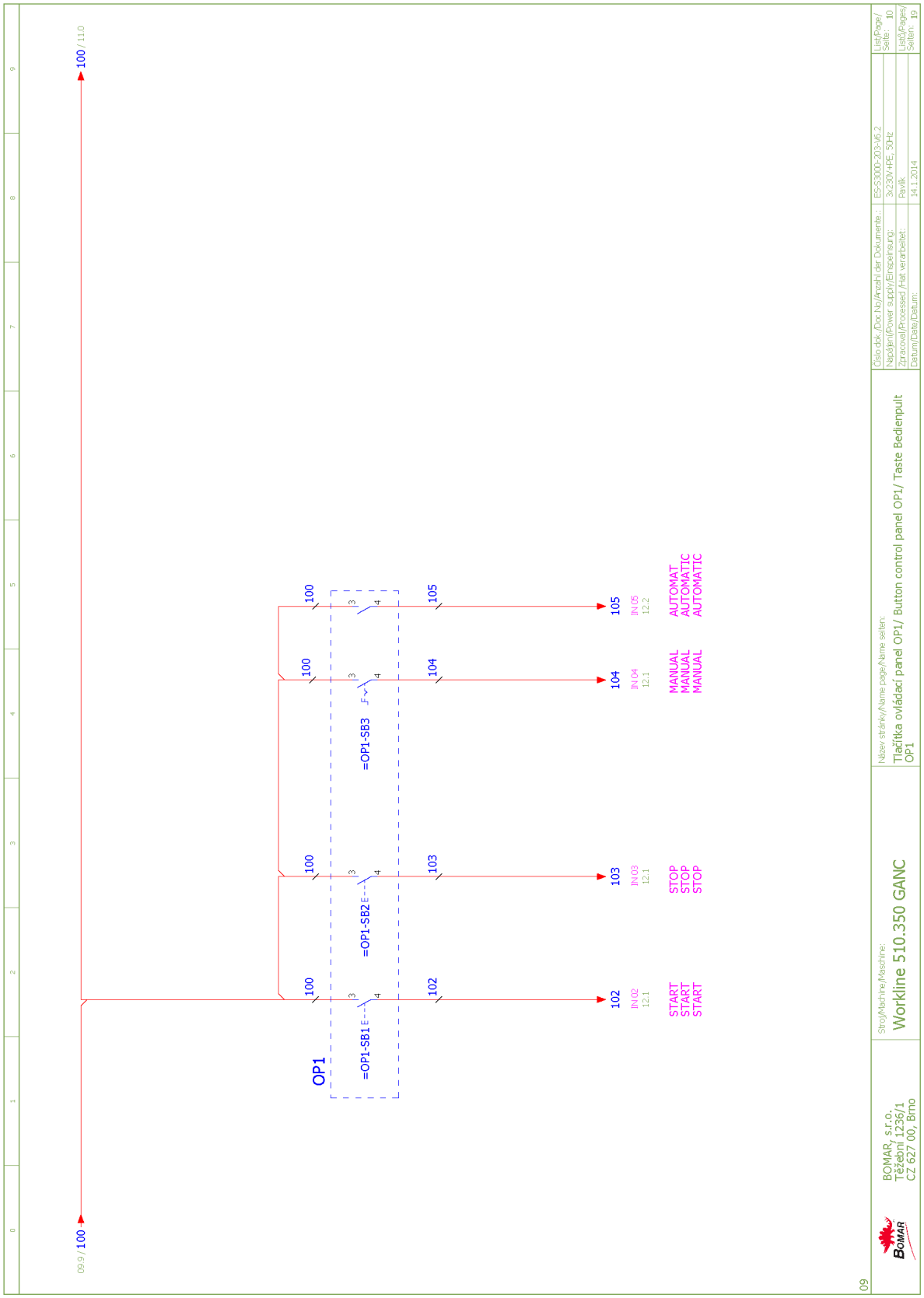
09.9 / 100
100 / 11.0
OP1
=OP1-SB1
=OP1-SB2
=OP1-SB3
100
102
103
104
105
IN 02
12.1
IN 03
12.1
IN 04
12.1
IN 05
12.2
START
START
START
STOP
STOP
STOP
MANUAL
MANUAL
MANUAL
AUTOMAT
AUTOMATIC
AUTOMATIC
BOMAR, s.r.o.
Těžební 1236/1
CZ 627 00, Brno
Stroj/Machine/Maschine:
Workline 510.350 GANC
Název stránky/Name page/Name seiten:
Tlačítka ovládací panel OP1/ Button control panel OP1/ Taste Bedienpult OP1
Číslo dok. /Doc.No./Anzahl der Dokumente:
ES-S300-203-V6.2
Napájení/Power supply/Einspeisung:
3x230V+PE, 50Hz
Zpracoval/Processed /Hat verarbeitet:
Pavlík
Datum/Date/Datum:
14.1.2014
List/Page/Seite: 10
List(s)/Pages/Seiten: 19
09

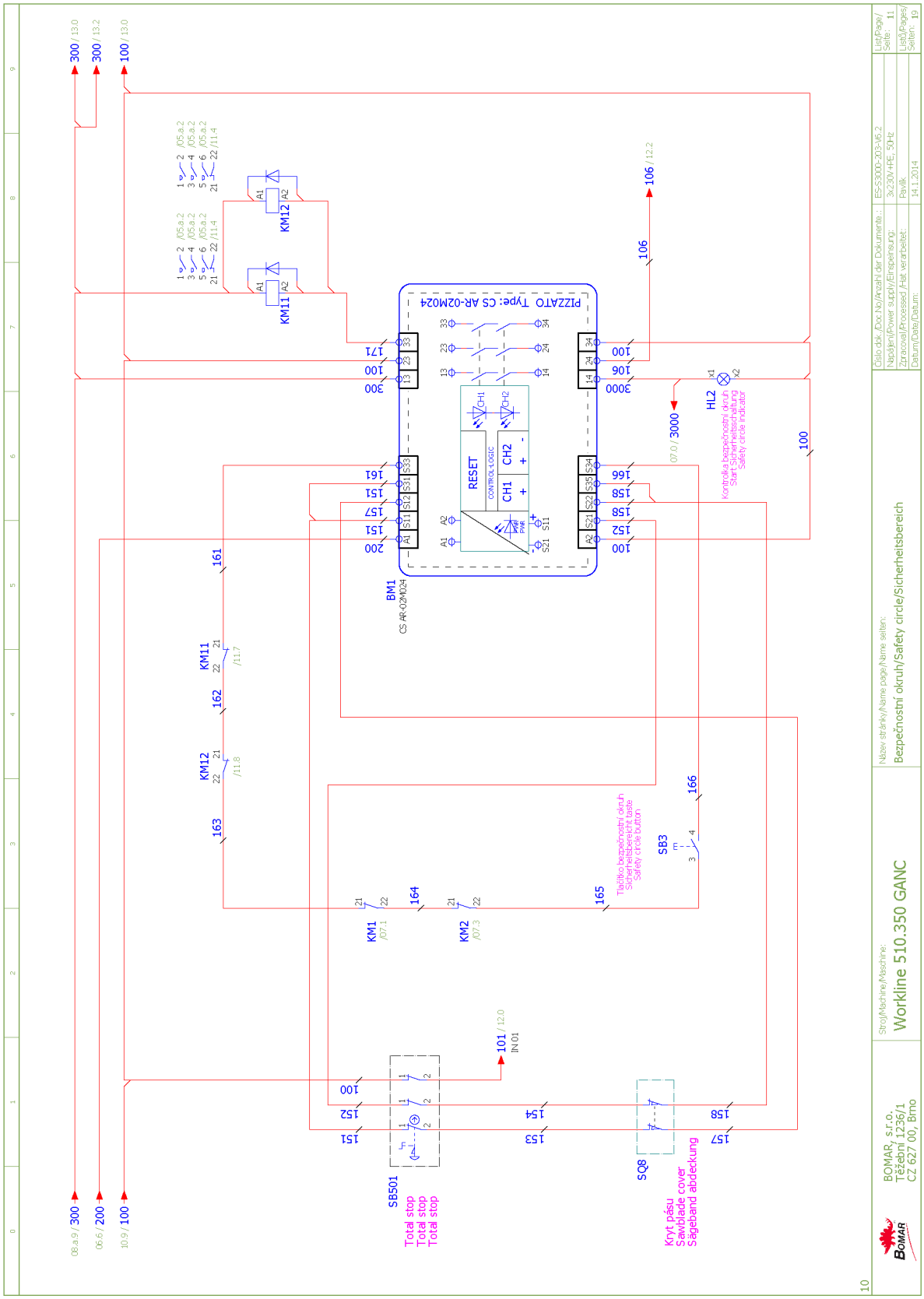
Číslo dok./Doc.No/Číslo dokumentu: ES-S3000-203-V6.2
Napájení/Power supply/Einspeisung: 3x230V+PE, 50Hz
Zpracoval/Processed/Hak verarbeitet: Pavlík
Datum/Date/Datum: 14.1.2014
List/Page/Seite: 11
Listů/Pages/Seiten: 19
Název stránky/Name page/Name seiten:
Bezpečnostní okruh/Safety circle/Sicherheitsbereich
Stroj/Machine/Maschine:
Workline 510.350 GANC
BOMAR, s.r.o.
Těžební 1236/1
CZ 627 00, Brno
PIZZATO Type: CS AR-02M024
BM1
CS AR-02M024
RESET
CONTROL-LOGIC
CH1
CH2
KM11
KM12
KM1
KM2
SB3
SB501
Total stop
Total stop
Total stop
SQ8
Kryt pásu
Sawblade cover
Sägeband abdeckung
HL2
Kontrolka bezpečnostní okruh
Safety circle indicator
Tlačítko bezpečnostní okruh
Safety circle button
IN 01

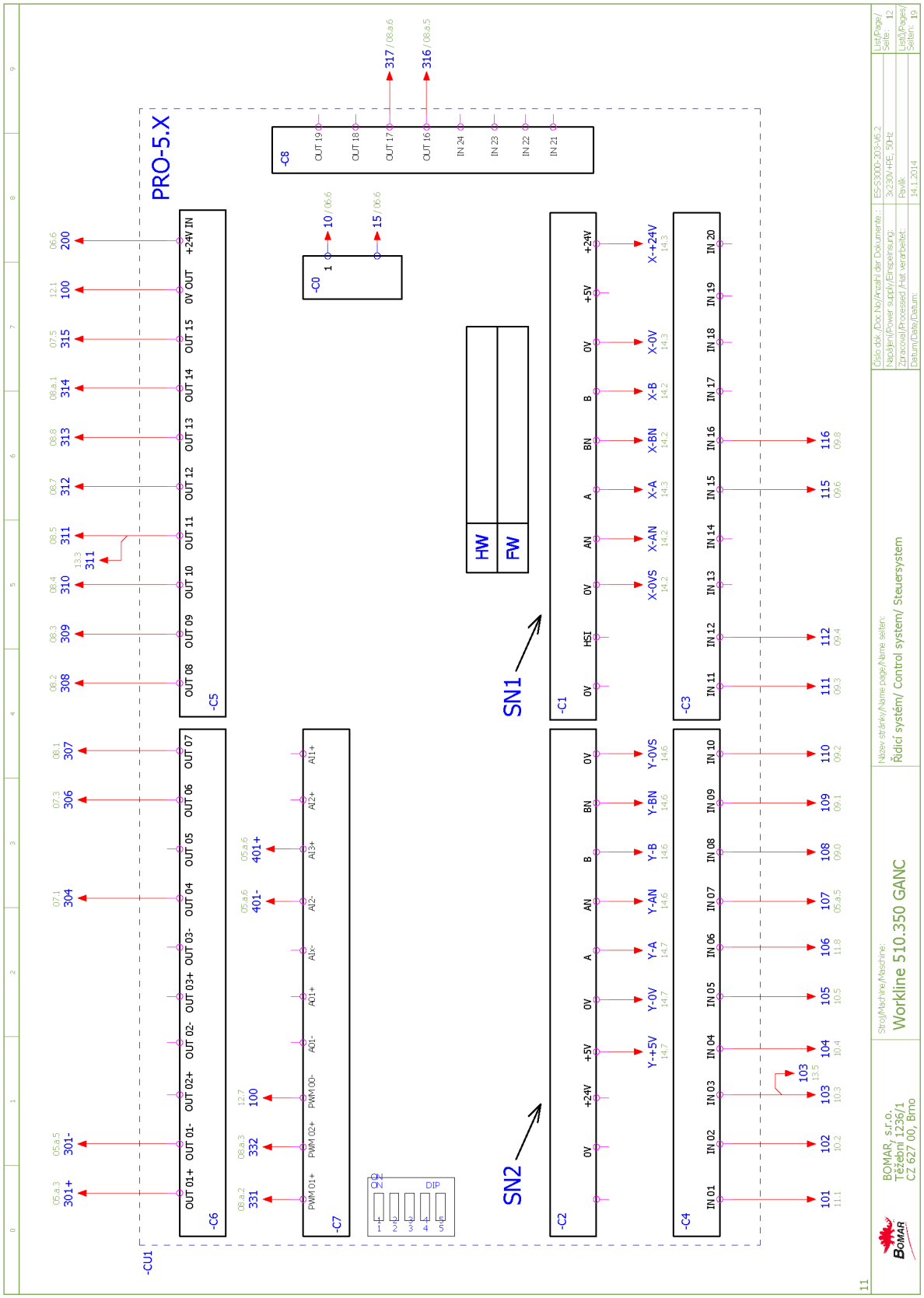
PRO-5.X
-CU1
-C5
-C6
-C7
-C8
-C0
-C1
-C2
-C3
-C4
SN1
SN2
HW
FW
DIP
ON
Číslo dok./Doc No./Anzahl der Dokumente:
ES-S300-203-V6.2
Napájení/Power supply/Einspeisung:
3x230V+PE, 50Hz
Zpracoval/Processed /Hat verarbeitet:
Pavlík
Datum/Date/Datum:
14.1.2014
List/Page/Seite: 12
List(s)/Pages/Seiten: 19
Název stránky/Name page/Name seiten:
Řídící systém/ Control system/ Steuersystem
Stroj/Machine/Maschine:
Workline 510.350 GANC
BOMAR, s.r.o.
Těžební 1236/1
CZ 627 00, Brno
11

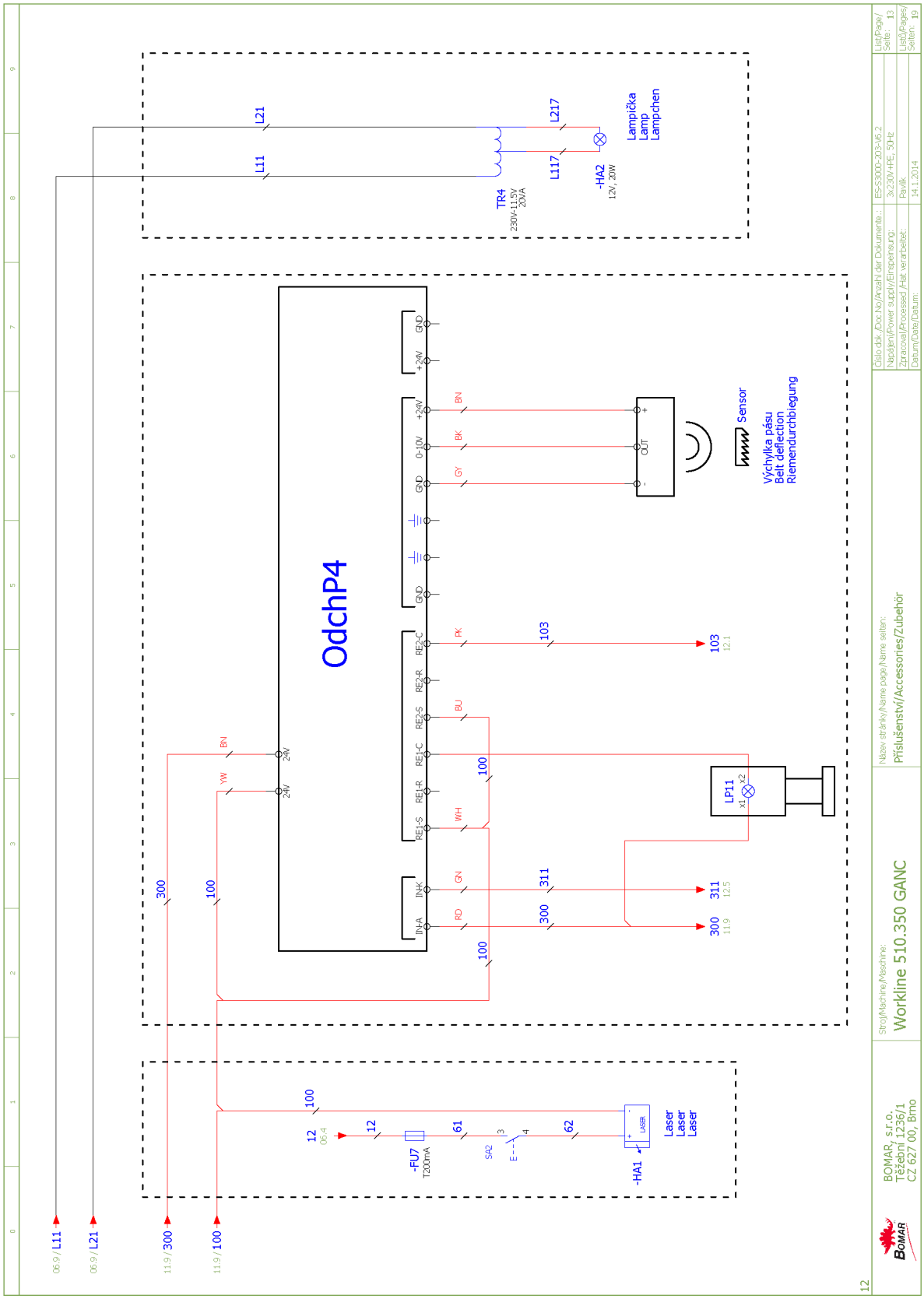

Schémata
Schemas
Schematics

SN1

ELGO	
+	HNĚDÁ BROWN BRAUN
-	BÍLÁ WHITE WEIS
A	ZELENÁ GREEN GRÜN
AN	FIALOVÁ VIOLET VIOLET
B	ŽLUTÁ YELLOW GELB
BN	ORANŽOVÁ ORANGE ORANGE
0VS	ČERNÁ BLACK SCHWARZ

SN2

Senzor polohy ramene Sawframe position sensor Rahmenposition sensor	
+	HNĚDÁ BROWN BRAUN
-	ŠEDÁ GREY GRAU
A	RŮŽOVÁ PINK ROSA
AN	ZELENÁ GREEN GRÜN
B	ŽLUTÁ YELLOW GELB
BN	BÍLÁ WHITE WEIS
0VS	ČERNÁ BLACK SCHWARZ

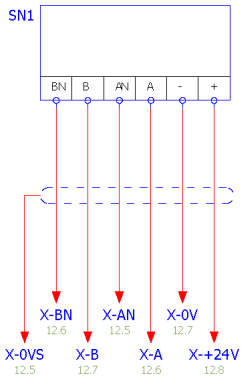

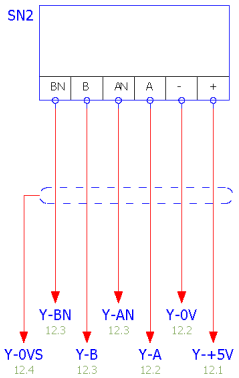

13

BOMAR, s.r.o. Těžební 1236/1 CZ 627 00, Brno	Stroj/Machine/Maschine: Workline 510.350 GANC	Název stránky/Name page/Name seiten: Zapojení snímačů/Conection of sensors/Sensoranschluss	Číslo dok./Doc.No/Anzahl der Dokumente.: ES-S3000-203-V6.2
			Napájení/Power supply/Einspeisung: 3x230V+PE, 50Hz
			Zpracoval/Processed /Hat verarbeitet: Pavlik
			Datum/Date/Datum: 14.1.2014
			List/Page/Seite: 14
			Listů/Pages/Seiten: 19

6.4. Hydraulické schéma / Hydraulikschema / Hydraulic diagram

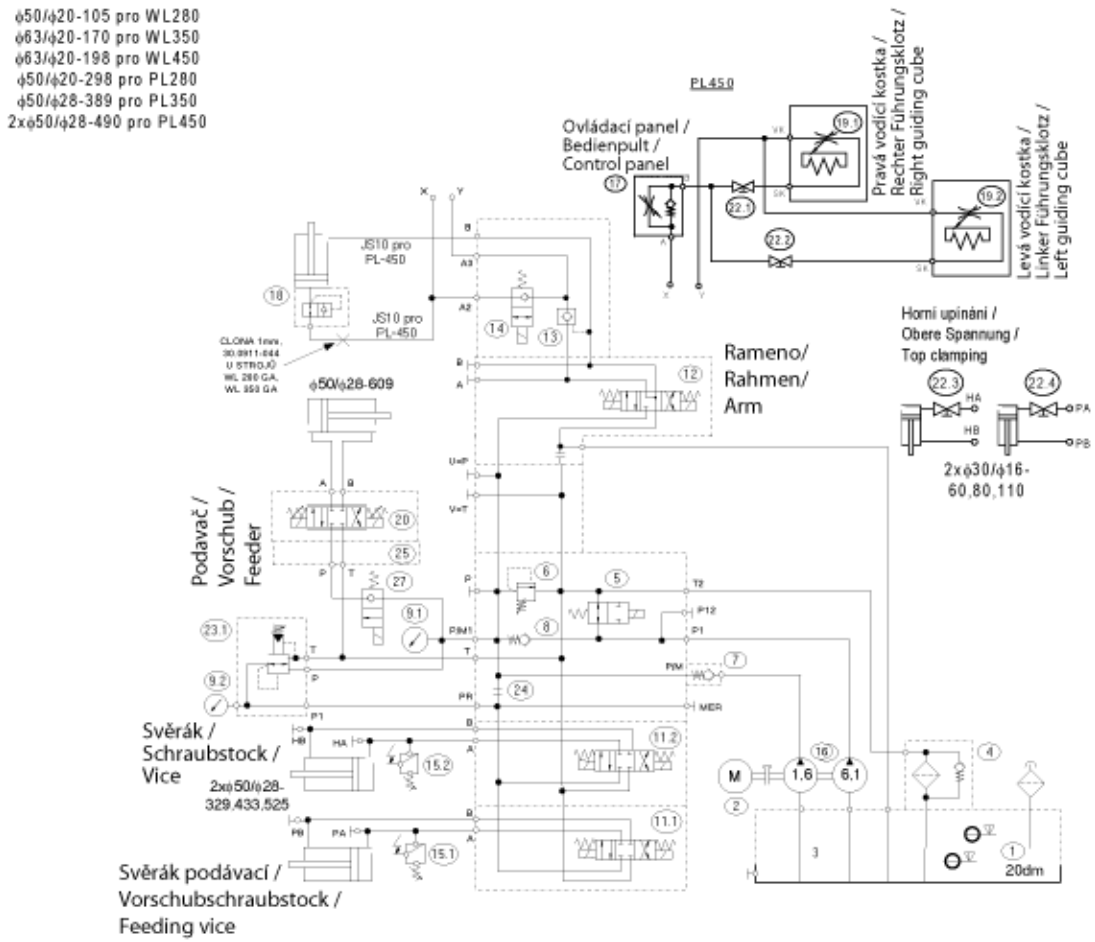

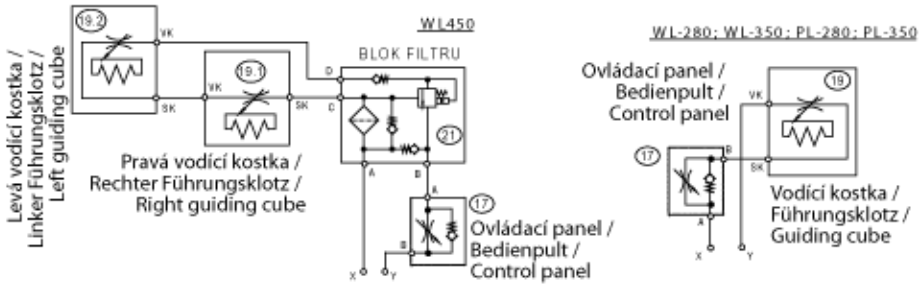

205.M216-250
(16.6.2011)
WORKLINE 280 var.: A / GA
WORKLINE 350 var.: A / GA
WORKLINE 450 var.: A / GA
PROLINE 280 A
PROLINE 350 A
PROLINE 450 A

Typ / Type / Type	Workline 280, 350, 450 A/GA / Proline 280, 330, 450
Hydraulický agregát / Hydroaggregat / Hydro aggregat	92.001.070 (FMW), 5001-058-1, PPM-AC13-PG11/61-1,6-TM20-CB03-FR
Neuvedené světlosti / Unerwähnt Lichtbreite / Unlisted inside diameters	JS6
Výstupní šroubení / Ausgangschraubung / Output screewing	G1/4"

Pmax	5,5 MPa
Q	8+2,1 dm³/min
n	1400 rpm
P	1,1 kW

Poz.	Název položky		ks
Pos.	Bezeichnung		Menge
Pos.	Item		Pcs.
1	Nádrž / Behälter / Tank	TS20, S309-009-1-02 20 l	1
2	Elektromotor / Elektromotor / Electromotor	EM 90 1,1 kW/3 B34 400/230 V, 50 Hz	1
3	Hydrogenerátor / Hydraulikgenerator / Hydrogenerator	11A10A6,1X181G/101, 6X182G, 1,6+6,1cm^3/rpm	1
4	Zpětný filtr / Filter / Filter	MPF0301AG1 P10NBP01	1
5	Rozvaděč / Verteilungsventil / Distributor	SD2E-A2/S2I11 C13D-02400E1	1
6	Přepouštěcí ventil / Bypaßventil / By pass valve	SR1A-A/S10	1
7	Jednosměrný ventil / Einwegventil / One-way valve	RVZ-10LR, V205-008-1	1
8	Jednosměrný ventil / Einwegventil / One-way valve	SC1F-A2/H005	1
9	Manometr / Manometer / Manometer	D68, RAD., 0-100 bar	2/1
10	--	--	--
11	Rozváděč / Schaltschrank / Switchboard	RPEK1-03G3Z11/02400E1	3
12	Rozváděč / Schaltschrank / Switchboard	RPEK1-03G3Y11/02400E1	1
13	Hydraulický zámek / Hydraulisches Schloß / Hydraulic lock	PC08-30-0-N	1
14	Rozváděč / Schaltschrank / Switchboard	SD3E-A2/S2L2 C13D-02400E1	1
15	Tlakový spínač / Druckschalter / Pressure switch	WL:10–20 bar PL:20–50 bar	2
16	Nalévací zátka / Stopfen / Fill stopper	CPT-MD-FA/1"	1
17	Škrtící ventil / Drosselventil / Throttle-valve	PL:VS01- 04/R2,5,92.152.001 W:VS01-04/R2,5- OS,92.152.004	1
18	Pojistný ventil / Sicherungventil / Safety valve	VPNH ¼ 92.151.001	2/0
19	Kostka regulace / Regulationklotz / Regulation cube		1
20	Rozváděč / Schaltschrank / Switchboard	PRM2-043Z11/04-24 MIKR	1
21	Blok filtru / Filterblock / Filter block	92.153.005	1/0
22	Kulový ventil /Kugelventil / Globe valve		4/0
23	Redukční ventil / Reduktionventil /Reduction ventil	VRN2-06/S-6R	1
24	Šroub / Schraube / Screw	IMBUS M6×10 30.M216-201	1/0
25	Deska / Platte / Platte	DP4-04/32-4 G1/4"	1
26	Rychlospojka / Schnellkupplung / Gladhand	KM/S11 106007 92.060007/8	4/0

27	Ventil / Ventil / Ventil	S103 228 1	1

7. Drawing assemblies for spare parts order

- Při objednávání náhradních dílů vždy uvádějte: typ stroje (např. Workline 510.350 GANC) , výrobní číslo (např. 125) a rok výroby (např. 1999).

- In die Bestellung der Ersatzteile führen Sie immer an: Maschinentyp (z. B. Workline 510.350 GANC), Serien Nr. (z. B. 125) und Baujahr (z. B. 1999).

- For spare parts order, you must always to allege: type of machine (for example Workline 510.350 GANC), serial number (for example 125, see cover page) and year of construction (for example 1999).

7.1. WORKLINE 510.350 Ganc

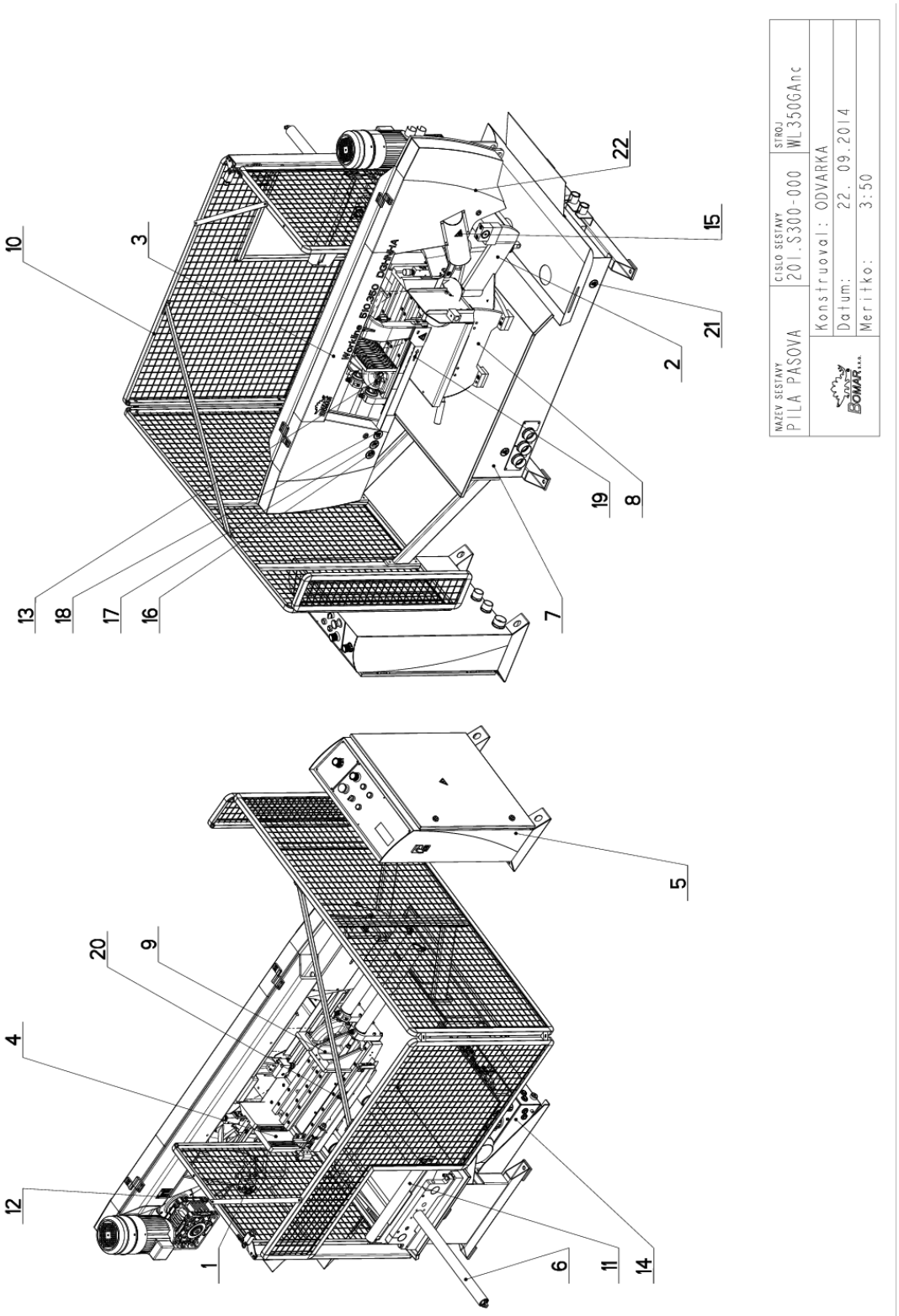

7.2. Kusovník / Piece list / Stückliste - WORKLINE 510.350 Ganc

Cislo Sestavy	Ver.	Nazev sestavy
201.S300-000	1	PILA PASOVA/BAND SAW/BANDSAGE

Poz.	Objednaci cislo	Ver.	Nazev polozky	Rozmer	Ks
1	201.0614-200	0	ODMEROVANI / MEASURING / GEHRUNGSMESSUNG		1
2	201.M302-100 (1)	0	KONZOLA / CONSOLE / KONSOLE		1
3	201.M304-300	8	RAMENO / SAW ARM / SÄGERAHMEN		1
4	201.M307-050	2	VALEC ZVEDACI / LIFTING CYLINDER / HEBEZYLINDER	SESTAVA	1
5	201.R230-300	2	OVLADACI PANEL / CONTROL PANEL / BEDIENPULT		1
6	201.R311-100	0	CELO / /		1
7	201.S201-000	1	PODSTAVEC / BASE / UNTERSATZ		1
8	201.S309-000	0	PODSTAVEC SVERAKU / VICE BASE / SCHRAUBSTOCKUNTERSATZ		1
9	201.S311-000	0	PODAVAC / FEEDER / VORSCHUB		1
10	201.S314-030	0	PLOT / FENCE / ZAUN		1
11	201.S314-250	0	VALEC POMOCNY / AUXILIARY CYLINDER / HILFSZYLINDER		1
12	30.S399-001	2	STITEK TYPOVY / MACHINE LABEL / MASCHINE SCHILD	P 0.5x65	1
13	31.0599-005	0	SAMOLEPKA / STICKER / AUFKLEBER		1
14	92.001.070	0	AGREGAT HYDRAULICKY / HYDRAULIC GENERATOR / HYDRAULIKAGGREGAT	FMV	1
15	99.900.040	0	SAMOLEPKA / STICKER / AUFKLEBER		2
16	99.900.047	0	SAMOLEPKA / STICKER / AUFKLEBER		1
17	99.900.048	0	SAMOLEPKA / STICKER / AUFKLEBER		1
18	99.900.049	0	SAMOLEPKA / STICKER / AUFKLEBER		1
19	99.900.053	0	SAMOLEPKA / STICKER / AUFKLEBER		1
20	99.900.057	0	SAMOLEPKA / STICKER / AUFKLEBER		1
21	99.900.068	0	SAMOLEPKA / STICKER / AUFKLEBER	pouziti vysokozvizneno vozikku	2
22	99.901.040	2	SAMOLEPKA / STICKER / AUFKLEBER		1

1.ZRUSENA KONZOLA 201.M302-000 A NAHR.201.M302-100. 019/ZM194 22.9.2014 SLEZACKOVA

Cislo Sestavy/Number of assembly/Nummer der Baugruppe; Verze (Ver.)/Version/Version; Nazev sestavy/Assembly title/Name der Baugruppe; Pozice (Poz.)/Position/Position;
Objednaci cislo/Purchase order number/Bestellnummer; Nazev polozky/Volume title/Name der Position; Rozmer/Stock size/Abmessung

7.3. Odměřování / Measuring / Gehrungsmessung

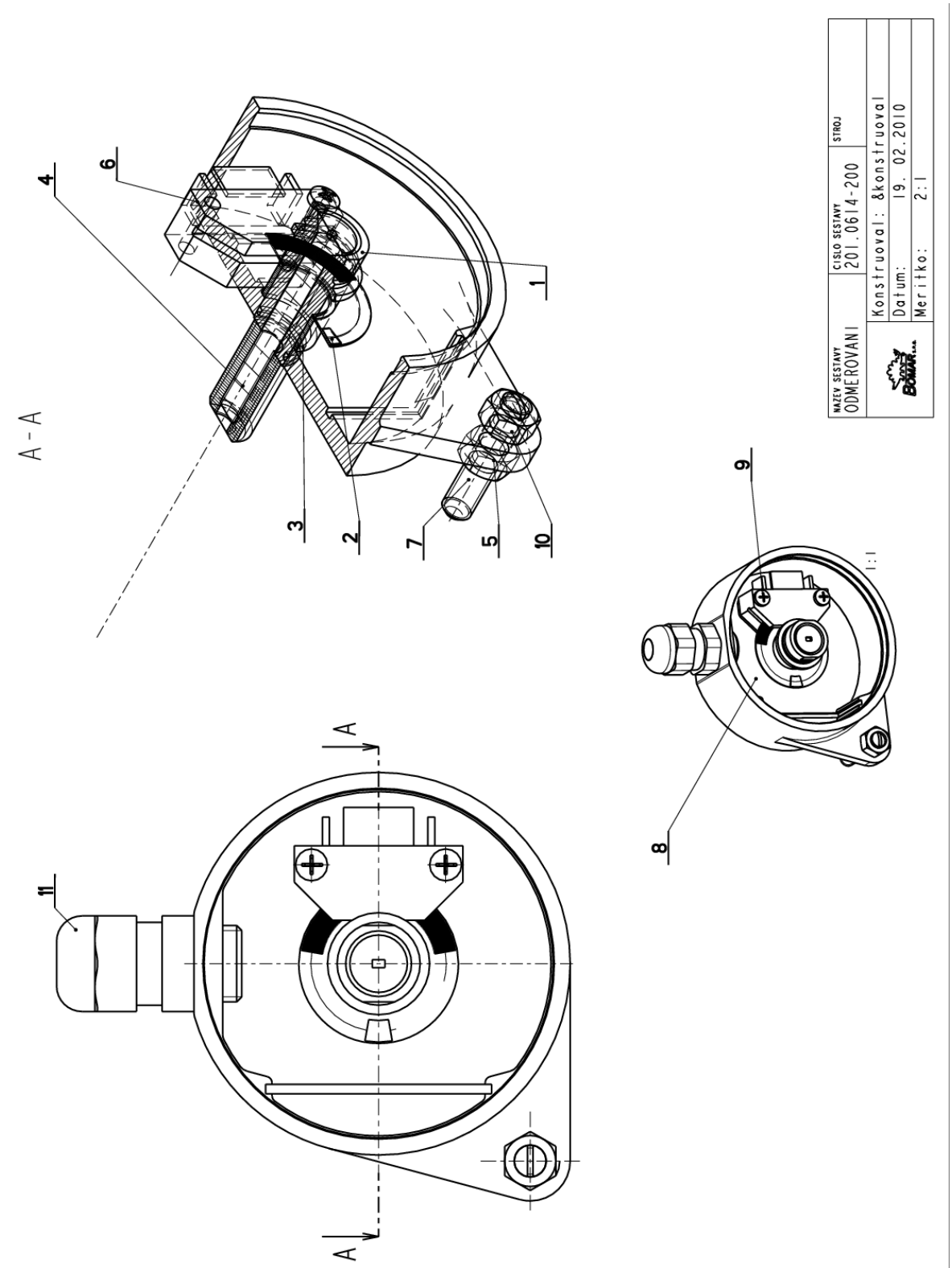

Cislo Sestavy	Ver.	Nazev sestavy
201.0614-200	0	ODMEROVANI/MEASURING/GEHRUNGSMESSUNG

Poz.	Objednaci cislo	Ver.	Nazev polozky	Rozmer	Ks
1	30.0614-201	0	CEP / LUG / BOLZEN	d 16	1
2	30.0614-203	0	CLONA / CURTAIN / SCHÜRZE	FOLIE 0.3	1
3	30.0614-204	0	POUZDRO / SLEEVE / BÜCHSE	TR 13x1	1
4	30.0614-208	0	SROUB / BOLT / SCHRAUBE	TYC M10	1
5	31.0614-202	0	KRABICE / BOX / DOSE	VYLISEK-PLAST	1
6	31.0631-201	0	SNIMAC / SENSOR / SENSOR		1
7	90.002.20.027	0	SROUB STAVECI / ADJUSTMENT BOLT / STELLSCHRAUBE	SROUB M5X25	1
8	90.011.27.019	0	SROUB ZAPUSTNY / COUNTERSINK BOLT / SENKSCHRAUBE	SROUB M5X40	1
9	90.014.50.004	0	SROUB / BOLT / SCHRAUBE	M2,5x14	2
10	90.100.55.003	0	MATICE / NUT / MUTTER	MATICE _ M5	2
11	91.070.010	0	PRUCHODKA / LEADTHROUGH / DURCHFÜHRUNG	M12x1,5 CERNA	1

Cislo Sestavy/Number of assembly/Nummer der Baugruppe; Verze (Ver.)/Version/Version; Nazev sestavy/Assembly title/Name der Baugruppe; Pozice (Poz.)/Position/Position;
Objednaci cislo/Purchase order number/Bestellnummer; Nazev polozky/Volume title/Name der Position; Rozmer/Stock size/Abmessung

7.5. Konzola / Console / Konsole

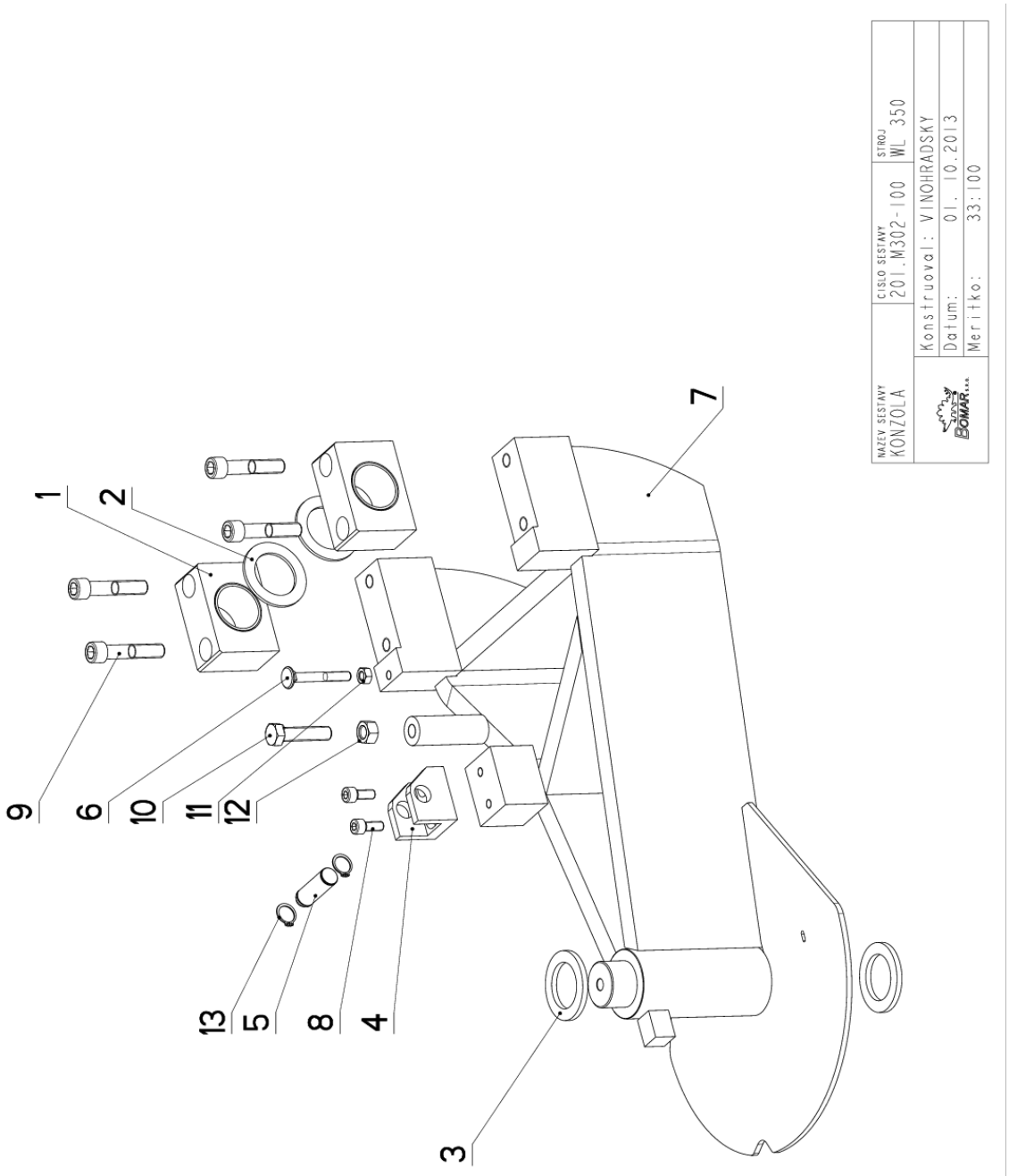

7.6. Kusovník / Piece list / Stückliste - Konzola / Console / Konsole

Cislo Sestavy	Ver.	Nazev sestavy
201.M302-100	0	KONZOLA/CONSOLE/KONSOLE

Poz.	Objednaci cislo	Ver.	Nazev polozky	Rozmer	Ks
1	30.0802-002	1	LOZISKO / BEARING / LAGER		2
2	30.0804-005	0	KROUZEK / RING / RING	P 3x60	2
3	30.0804-013	0	KROUZEK / RING / RING	P 5x60	2
4	30.0807-008	3	DRZAK / HOLDER / HALTER	HR 40x40	1
5	30.0807-009	2	CEP / LUG / BOLZEN	d 16h9	1
6	30.0808-007	0	SROUB / BOLT / SCHRAUBE	M8x60	1
7	30.M302-001	1	KONZOLA OTOCNA / TURNABLE CONSOL / DREHKONSOLE		1
8	90.001.25.032	0	SROUB IMBUS / ALLEN HEAD BOLT / IMBUSSCHRAUBE	8x20	2
9	90.001.25.063	0	SROUB IMBUS / ALLEN HEAD BOLT / IMBUSSCHRAUBE	M12X60	4
10	90.005.55.045	0	SROUB 6HRANNY / 6 SIDED BOLT / SECHSKANTSCHRAUBE	SROUB M12X50	1
11	90.100.55.005	0	MATICE / NUT / MUTTER	MATICE _ M8	1
12	90.100.55.007	0	MATICE / NUT / MUTTER	MATICE _ M12	1
13	95.800.007	0	SEGR HRIDEL. / OUTSIDE SAFETY RING / SICHERUNGSRING AUSSEN	POJISTNY KROUZEK 16	2

Cislo Sestavy/Number of assembly/Nummer der Baugruppe; Verze (Ver.)/Version/Version; Nazev sestavy/Assembly title/Name der Baugruppe; Pozice (Poz.)/Position/Position; Objednaci cislo/Purchase order number/Bestellnummer; Nazev polozky/Volume title/Name der Position; Rozmer/Stock size/Abmessung

7.7. Rameno / Saw arm / Sägerahmen

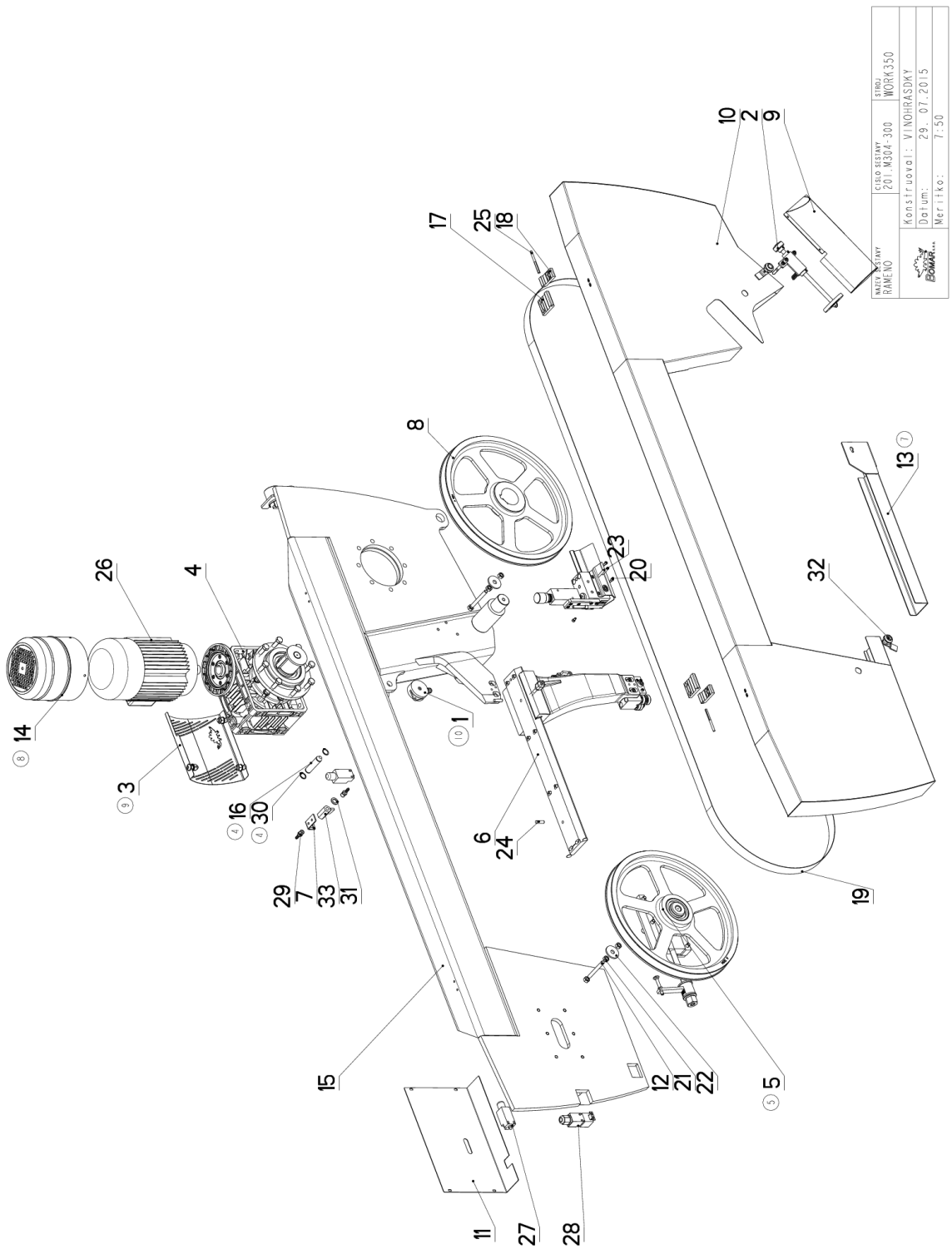

Cislo Sestavy	Ver.	Nazev sestavy
201.M304-300	10	RAMENO/SAW ARM/SÄGERAHMEN

Poz.	Objednaci cislo	Ver.	Nazev polozky	Rozmer	Ks
1	262.012 (10)	0	ODMEROVANI / MEASURING / GEHRUNGSMESSUNG		1
2	201.M304-020	0	KARTAC / BRUSH / BÜRSTE		1
3	201.M304-022 (9)	0	KRYT / COVER / ABDECKUNG		1
4	201.M305-000	1	PREVODOVKA / TRANSMISSION / GETRIEBE		1
5	201.M308-100 (5)	0	NAPINANI / TENSIONING / SPANNUNG		1
6	201.M310-000	2	VEDENI PASU / BELT GUIDE / SÄGEBANDFÜHRUNG		1
7	30.1814-011	2	DRZAK / HOLDER / HALTER	P 3x76	1
8	30.2904-003	3	KOLO HNACI / DRIVE WHEEL / ANTRIEBSRAD	ODLITEK	1
9	30.M304-009	0	KRYT KARTACKU / BRUSH COVER / BÜRSTENABDECKUNG		1
10	30.M304-011	2	KRYT / COVER / ABDECKUNG		1
11	30.M304-017	0	KRYT NAPINANI / TENSIONING COVER / BANDSPANNUNGSABDECKUNG	P 1.5x310	1
12	30.M304-018	1	TYC ZAVITOVA / THREADED POLE / GEWINDESTANGE	M10	2
13	30.M304-066 (7)	0	KRYT PASU / BELT COVER / BANDABDECKUNG		1
14	30.M304-070 (8)	0	VENTILATOR / VENTILATOR / VENTILATOR		1
15	30.M304-201	4	RAMENO / SAW ARM / SÄGERAHMEN		1
16	30.M404-007 (4)	0	CEP / LUG / BOLZEN	d 18h9	1
17	30.R304-006	3	PANT / BOARD / PLATTE	PROFIL	2
18	30.R304-007	2	PANT / BOARD / PLATTE	PROFIL	2
19	44.104.003	0	PAS PILOVY 330 / SAW BELT / SÄGEBAND	4780x32(4)x0.90	1
20	90.001.25.007	0	SROUB IMBUS / ALLEN HEAD BOLT / IMBUSSCHRAUBE	M5X10	4
21	90.100.55.006	0	MATICE / NUT / MUTTER	MATICE _ M10	6
22	90.151.50.002	0	PODLOZKA / WASHER / UNTERLEGSCHEIBE	PODLOZKA 12	2
23	90.302.02.001	0	KUZEL. KOLIK S ZAV. / TAPER PIN + THREAD / KEGELBOLZEN + GEWINDE	KOLIK 6X36	2
24	90.302.02.002	0	KUZEL. KOLIK S ZAV. / TAPER PIN + THREAD / KEGELBOLZEN + GEWINDE	KOLIK 8X30	2
25	90.307.02.001	0	KOLIK / PIN / BOLZEN	D6	2
26	91.001.053	0	ELEKTROMOTOR / ELECTRIC MOTOR / ELEKTROMOTOR	H100KW3	1
27	91.173.007	0	SPINAC KONCOVY / END SWITCH / ENDSCHALTER	-RIWK	2
28	91.173.012	0	SPINAC KONCOVY / END SWITCH / ENDSCHALTER		1
29	94.202.002	0	REDUKCE / REDUCTION / ADAPTOR / REDUKTION	REDUKCE 6/R1/4"	2
30	95.800.008 (4)	0	SEGR HRIDEL. / OUTSIDE SAFETY RING / SICHERUNGSRING AUSSEN	POJISTNY KROUZEK 18	2

Cislo Sestavy/Number of assembly/Nummer der Baugruppe; Verze (Ver.)/Version/Version; Nazev sestavy/Assembly title/Name der Baugruppe; Pozice (Poz.)/Position/Position;
Objednaci cislo/Purchase order number/Bestellnummer; Nazev polozky/Volume title/Name der Position; Rozmer/Stock size/Abmessung

7.9. Rameno / Saw arm / Sägerahmen

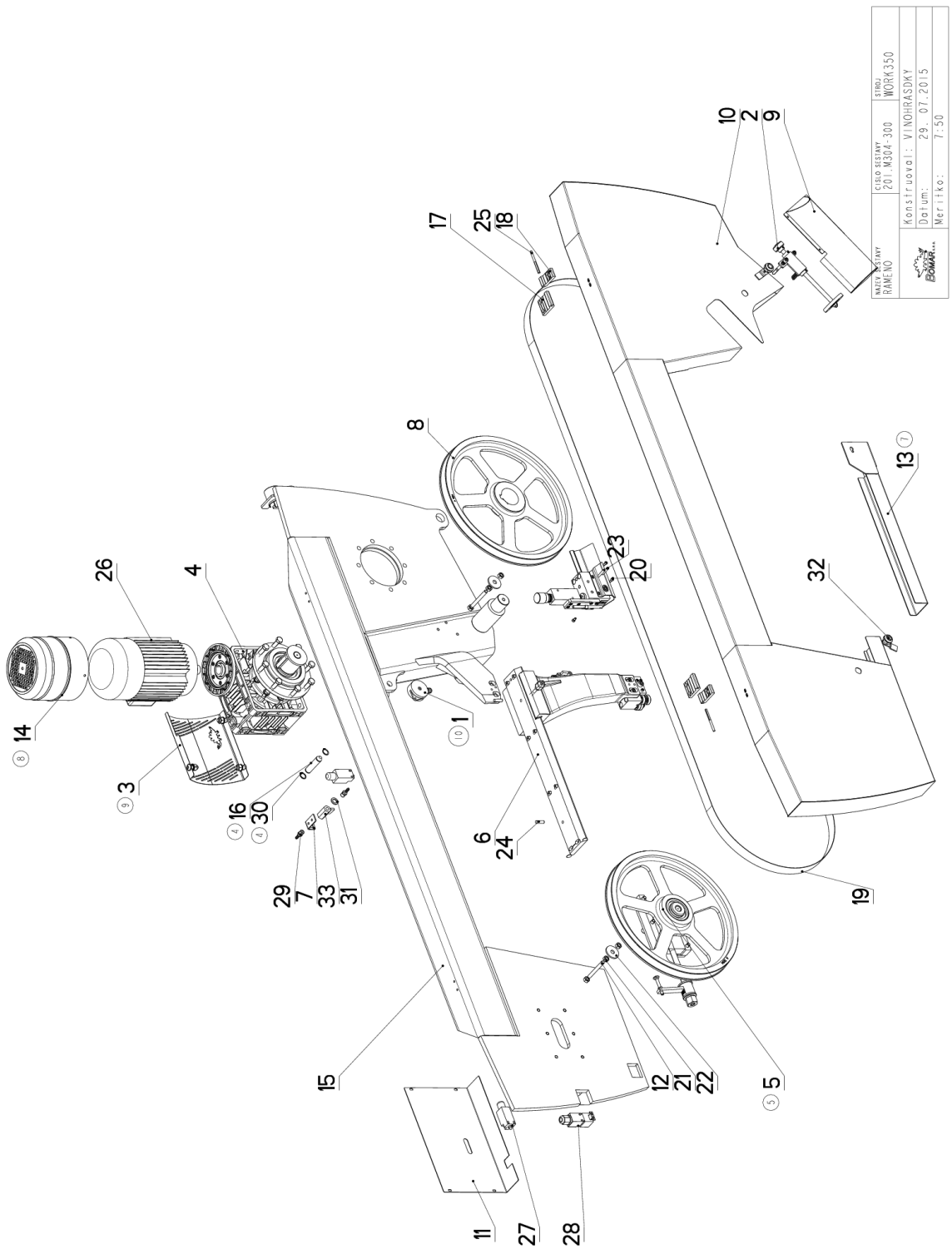

31	96.081.001	0	KROUZEK TESNICI / SEAL RING / DICHTUNGSRING	23x15x3	1
32	99.104.002	0	ZAMEK / LOCK / SCHLOSS	ZAMEK CINSKY	2
33	99.260.003	0	VENTIL / VALVE / VENTIL	1/4"	1

1.PRIDAN VENTILATOR 30.M304-060 . 035/ZM104 21.3.2012 SLEZACKOVA
2.PRID.1xPODLOZKA 30.9204-006,1xPODLOZKA 17 90.150.50.009 . 170/ZM238 13.8.2012 SLEZACKOVA
3.ZRUS.PODLOZKA 30.9204-006 A NAHR.90.162.00.002. 225/ZM288 4.10.2012 SLEZACKOVA
4.PRID.CEP 30.M404-007,2xPOJISTNY KROUZEK 18 95.800.008. 275/ZM346 11.1.2013 SLEZACKOVA
5.ZRUSENO NAPINANI 201.M308-000 A NAHR.201.M308-100. 045/ZM225 17.9.2013 SLEZACKOVA
6.ZRUS.SOUC.30.9204-004,30.9204-004,30.M204-006,PRUZINA 31.9204-003,MATICE 90.100.55.008, PODLOZKA 90.150.50.009,90.162.00.002,POJ.KROUZEK 95.800.013. 019/ZM049 4.3.2014 SLEZACKOVA
7.ZRUS.KRYT PASU 30.M304-016 A NAHR.30.M304-066. 090/ZM108 15.5.2014 SLEZACKOVA
8.ZRUSEN VENTILATOR 30.M304-060 A NAHR.30.M304-070. 120/ZM142 24.6.2014 SLEZACKOVA
9.PRIDAN KRYT PREVODOVKY 201.M304-022. 005/ZM013 2.2.2015 SLEZACKOVA
10.PRIDANO ODMEROVANI 262.012. 017/ZM181 29.7.2015 SLEZACKOVA

Cislo Sestavy/Number of assembly/Nummer der Baugruppe; Verze (Ver.)/Version/Version; Nazev sestavy/Assembly title/Name der Baugruppe; Pozice (Poz.)/Position/Position;
Objednaci cislo/Purchase order number/Bestellnummer; Nazev polozky/Volume title/Name der Position; Rozmer/Stock size/Abmessung

7.11. Kartáč / Brush / Bürste

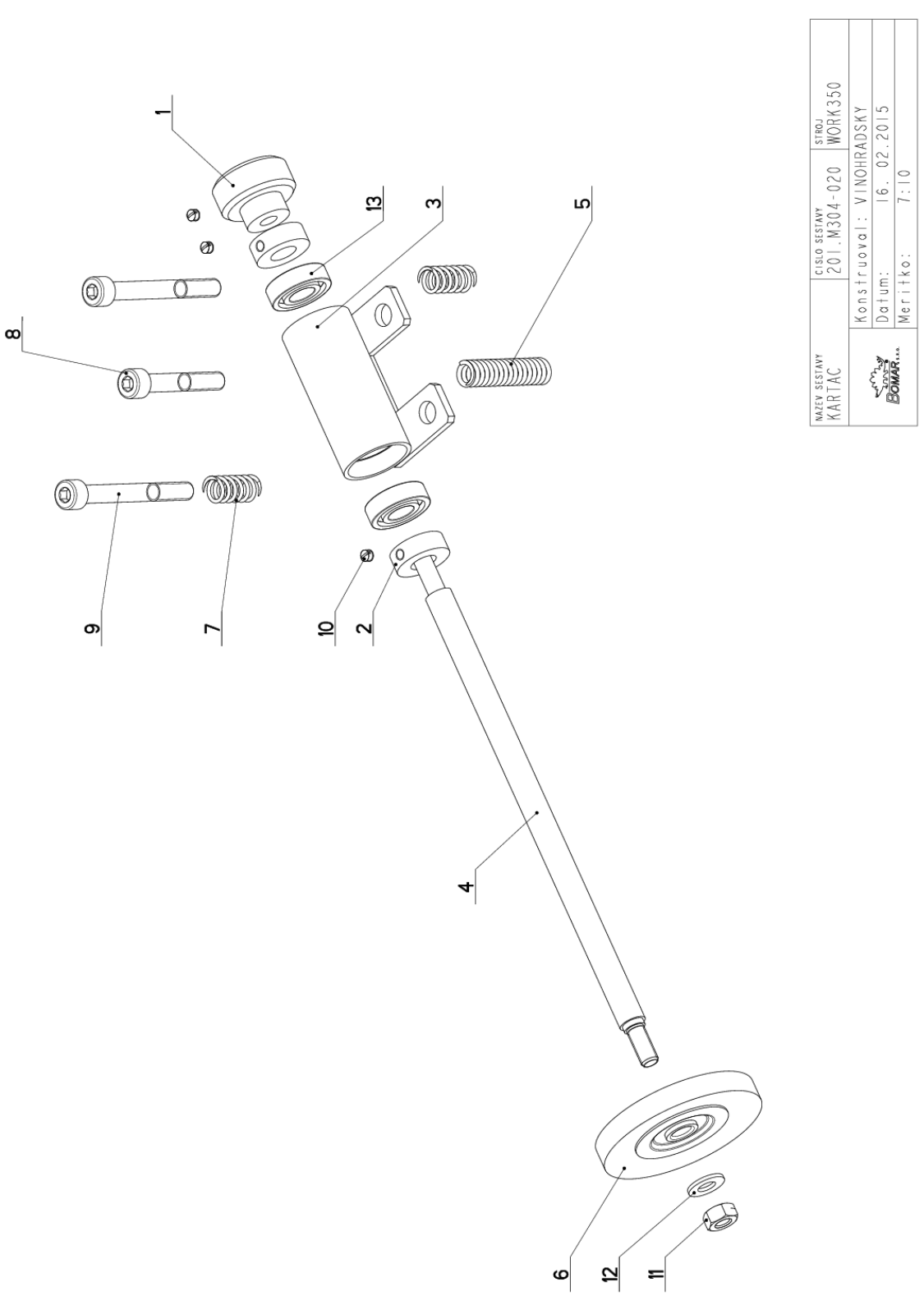

7.12. Kusovník / Piece list / Stückliste - Kartáč / Brush / Bürste

Cislo Sestavy	Ver.	Nazev sestavy
201.M304-020	0	KARTAC/BRUSH/BÜRSTE

Poz.	Objednaci cislo	Ver.	Nazev polozky	Rozmer	Ks
1	201.0814-204	0	KOLECKO / WHEEL / ROLLE	SESTAVA	1
2	30.0814-207	0	KROUZEK / RING / RING	d 25	2
3	30.9214-301	2	DRZAK / HOLDER / HALTER		1
4	30.M304-021	0	HRIDEL / SHAFT / WELLE	d 12	1
5	31.0305-211	0	PRUZINA / SPRING / FEDER	2x12x50x15,5	1
6	31.0814-208	0	KARTAC / BRUSH / BÜRSTE		1
7	31.1506-115	0	PRUZINA / SPRING / FEDER	1.6x12x25x7.5	2
8	90.001.25.038	0	SROUB IMBUS / ALLEN HEAD BOLT / IMBUSSCHRAUBE	M8X50	1
9	90.001.25.095	0	SROUB IMBUS / ALLEN HEAD BOLT / IMBUSSCHRAUBE	M8X70	2
10	90.003.20.001	0	SROUB STAVECI / ADJUSTMENT BOLT / STELLSCHRAUBE	SROUB M5X6	3
11	90.100.55.005	0	MATICE / NUT / MUTTER	MATICE _ M8	1
12	90.150.50.005	0	PODLOZKA / WASHER / UNTERLEGSCHEIBE	PODLOZKA 8,4	1
13	95.001.005	0	LOZISKO / BEARING / LAGER	6001 2RS	2

Cislo Sestavy/Number of assembly/Nummer der Baugruppe; Verze (Ver.)/Version/Version; Nazev sestavy/Assembly title/Name der Baugruppe; Pozice (Poz.)/Position/Position; Objednaci cislo/Purchase order number/Bestellnummer; Nazev polozky/Volume title/Name der Position; Rozmer/Stock size/Abmessung

7.13. Kolečko / Wheel / Rolle

Cislo Sestavy	Ver.	Nazev sestavy
201.0814-204	0	KOLECKO/WHEEL/ROLLE

Poz.	Objednaci cislo	Ver.	Nazev polozky	Rozmer	Ks
1	30.0814-204.1	0	KOLECKO / /	d 35	1
2	30.0814-204.2	0	NABOJ / /	d 20	1

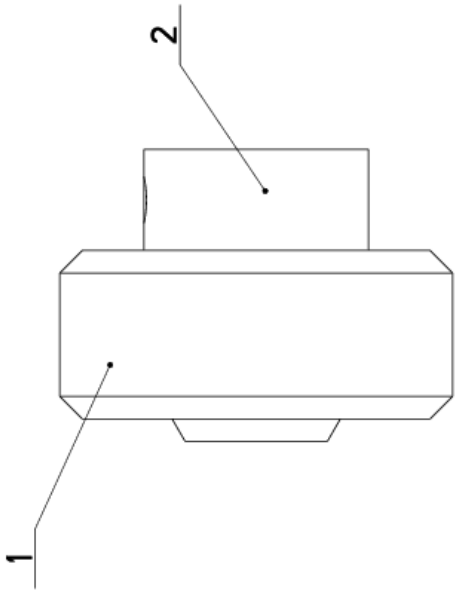

Cislo Sestavy/Number of assembly/Nummer der Baugruppe; Verze (Ver.)/Version/Version; Nazev sestavy/Assembly title/Name der Baugruppe; Pozice (Poz.)/Position/Position;
Objednaci cislo/Purchase order number/Bestellnummer; Nazev polozky/Volume title/Name der Position; Rozmer/Stock size/Abmessung

7.14. Kryt / Cover / Abdeckung

Cislo Sestavy
201.M304-022

Ver.
0

Nazev sestavy
KRYT/COVER/ABDECKUNG

Poz.	Objednaci cislo	Ver.	Nazev polozky	Rozmer	Ks
1	30.M304-023	0	PLECH / PLATE / BLECH	P1x238	1
2	90.013.27.028	0	SROUB / BOLT / SCHRAUBE	M12X30_ISO_7380	3
3	90.152.50.006	0	PODLOZKA / WASHER / UNTERLEGSCHEIBE	M12 DIN6798	3
4	90.100.55.007	0	MATICE / NUT / MUTTER	MATICE _ M12	3

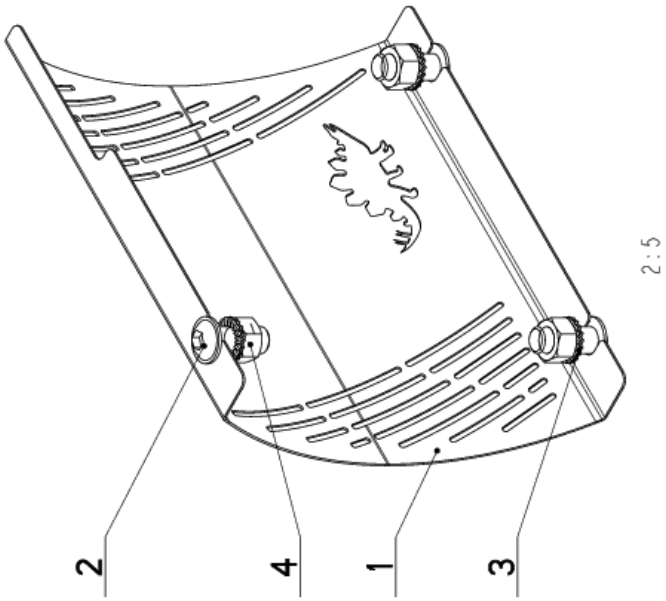

2:5

Cislo Sestavy/Number of assembly/Nummer der Baugruppe; Verze (Ver.)/Version/Version; Nazev sestavy/Assembly title/Name der Baugruppe; Pozice (Poz.)/Position/Position;
Objednaci cislo/Purchase order number/Bestellnummer; Nazev polozky/Volume title/Name der Position; Rozmer/Stock size/Abmessung

7.15. Převodovka / Transmission / Getriebe

Cislo Sestavy 201.M305-000 | Ver. 1 | Nazev sestavy PREVODOVKA/TRANSMISSION /GETRIEBE

Poz.	Objednaci cislo	Ver.	Nazev polozky	Rozmer	Ks
1	30.1804-010	0	PODLOZKA / WASHER / UNTERLEGSCHEIBE	d 70	1
2	30.2904-005	0	DISTANC / DISTANCE / DISTANZ	TR 55x8	1
3	30.2904-006	0	PERO / SPRING / FEDER	HR 14x14	1
4	30.2908-001	1	PODLOZKA / WASHER / UNTERLEGSCHEIBE	d 50	1
5	30.M305-003	2	HRIDEL / SHAFT / WELLE	d 65	1
6	30.M305-005	0	PRIRUBA / FLANGE / FLANSCHE	ODLITEK	1
7	30.M305-008	0	PERO / SPRING / FEDER	HR 10x8	1
8	90.005.55.025	0	SROUB 6HRANNY / 6 SIDED BOLT / SECHSKANTSCHRAUBE	SROUB M10X30	8
9	90.005.55.035	0	SROUB 6HRANNY / 6 SIDED BOLT / SECHSKANTSCHRAUBE	SROUB M12X45	8
10	90.011.27.025	0	ZAPUSTNY IMBUS / COUNTERSINK BOLT / SENKSCHRAUBE	SROUB M12X25	1
11	90.011.27.036 (1)	0	ZAPUSTNY IMBUS / COUNTERSINK BOLT / SENKSCHRAUBE	SROUB M10X25	1
12	90.150.50.006	0	PODLOZKA / WASHER / UNTERLEGSCHEIBE	PODLOZKA 10,5	8
13	95.001.027	0	LOZISKO / BEARING / LAGER	6309 2RS	2
14	99.001.129	0	PREVODOVKA SNEKOVA / WORM GEAR TRANSMISSION / SCHNECKENGETRIEBE		1

1.ZRUS.1xSROUB M12x25(90.011.27.025) A NAHR.1xSROUBEM M10x25(90.011.27.036). 110/ZM112 25.6.2012 SLEZACKOVA

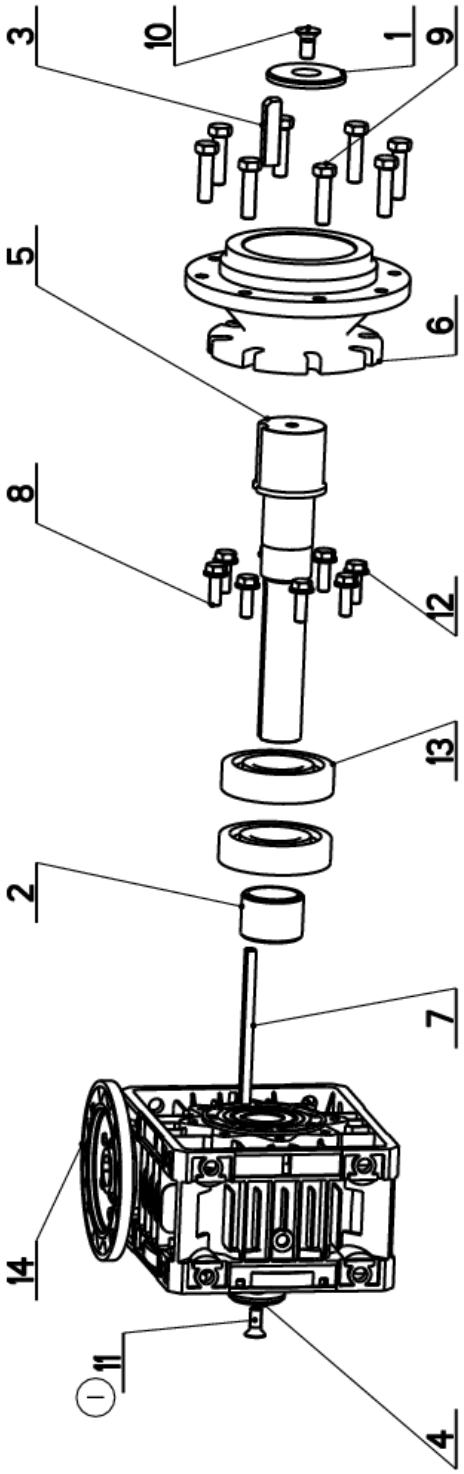

Cislo Sestavy/Number of assembly/Nummer der Baugruppe; Verze (Ver.)/Version/Version; Nazev sestavy/Assembly title/Name der Baugruppe; Pozice (Poz.)/Position/Position;
Objednaci cislo/Purchase order number/Bestellnummer; Nazev polozky/Volume title/Name der Position; Rozmer/Stock size/Abmessung

7.16. Napínání / Tensioning / Spannung

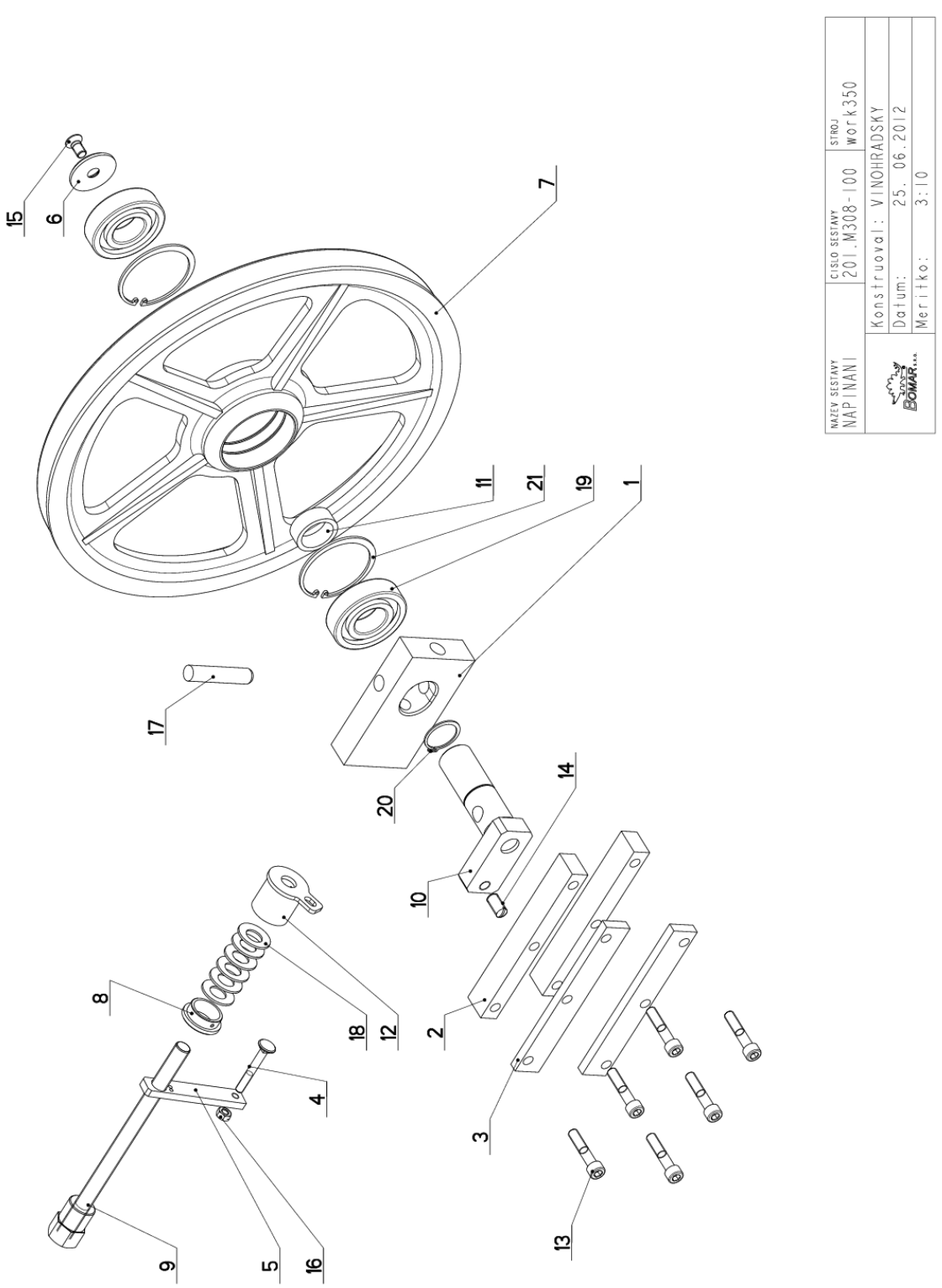

7.17. Kusovník / Piece list / Stückliste - Napínání / Tensioning / Spannung

Cislo Sestavy	Ver.	Nazev sestavy
201.M308-100	0	NAPINANI/TENSIONING/SPANNUNG

Poz.	Objednaci cislo	Ver.	Nazev polozky	Rozmer	Ks
1	30.0808-001	1	KOSTKA NAPINANI / TENSIONING CUBE / BANDSPANNUNGSWÜRFEL	80x30	1
2	30.0808-002	1	LISTA VODICI / LEAD TRIM / FÜHRUNGSLEISTE	30x20	2
3	30.0808-006	1	LISTA / TRIM / LEISTE	HR 30x10	2
4	30.0808-007	0	SROUB / BOLT / SCHRAUBE	M8x60	1
5	30.1708-004	4	DRZAK / HOLDER / HALTER	HR 20x8	1
6	30.2908-001	1	PODLOZKA / WASHER / UNTERLEGSCHEIBE	d 50	1
7	30.2908-103	2	KOLO NAPINACI / TENSIONING WHEEL / UMLENKRAD	ODLITEK	1
8	30.3508-004	1	KROUZEK / RING / RING	d42	1
9	30.4008-001	1	SROUB / BOLT / SCHRAUBE		1
10	30.4808-101	4	CEP NAPINANI / TENSIONING LUG / SPANNUNGSBOLZEN		1
11	30.4808-103	1	KROUZEK DISTANCNI / DISTANCE RING / DISTANZRING	d 45	1
12	30.6908-102	1	DRZAK / HOLDER / HALTER		1
13	90.001.25.052	0	SROUB IMBUS / ALLEN HEAD BOLT / IMBUSSCHRAUBE	M10X50	6
14	90.002.20.013	0	SROUB STAVECI / ADJUSTMENT BOLT / STELLSCHRAUBE	SROUB M12X25	1
15	90.011.27.008	0	ZAPUSTNY IMBUS / COUNTERSINK BOLT / SENKSCHRAUBE	SROUB M10X20	1
16	90.100.55.005	0	MATICE / NUT / MUTTER	MATICE _ M8	1
17	90.300.02.003	0	KOLIK VALC. KAL. / CYLINDRICAL PIN TEMPERED / ZYLINDERSTIFT GEHARTET	KOLIK 16X80	1
18	90.350.02.002	0	PRUZINA TALIROVA / DISC SPRING / TELLERFEDER	35,5X18,3X2,0X2,8	6
19	95.001.026	0	LOZISKO / BEARING / LAGER	6307 2RS	2
20	95.800.014	0	SEGR HRIDEL. / OUTSIDE SAFETY RING / SICHERUNGSRING AUSSEN	POJISTNY KROUZEK 35	1
21	95.801.013	0	SEGR DIRA / INSIDE SAFETY RING / SICHERUNGSRING INNEN	POJISTNY KROUZEK 80	2

7.18. Vedení pásu / Belt guide / Sägebandführung

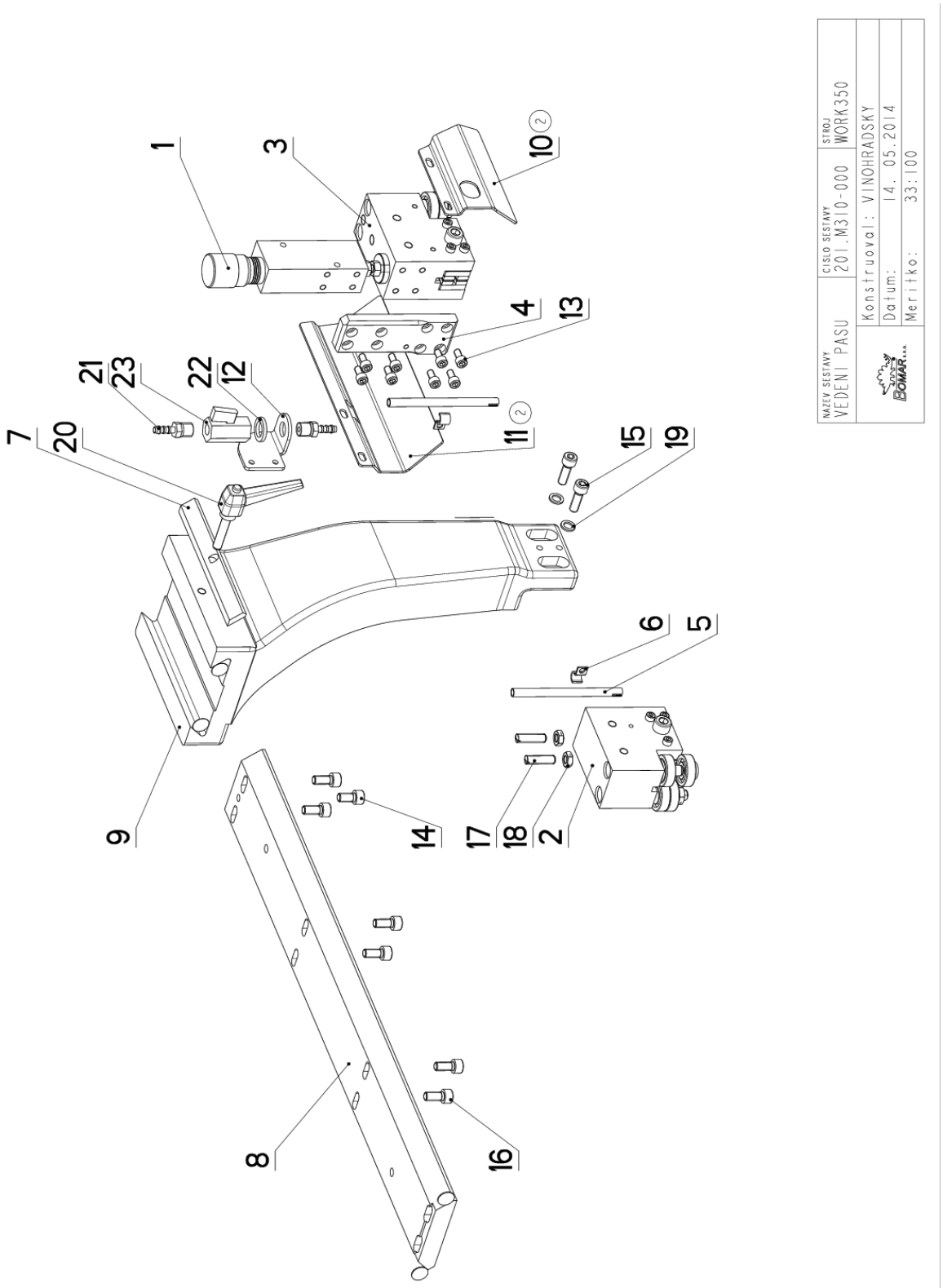

Cislo Sestavy	Ver.	Nazev sestavy
201.M310-000	2	VEDENI PASU/BELT GUIDE/SÄGEBANDFÜHRUNG

Poz.	Objednaci cislo	Ver.	Nazev polozky	Rozmer	Ks
1	201.2016-000	0	REGULACE PRITLAKU / PRESSURE REGULATION / SCHNITTDRUCKREGULATION		1
2	201.Y310-300	1	KOSTKA VODICI / LEAD CUBE / FÜHRUNGSKLOTZ		1
3	201.Y310-400	1	KOSTKA VODICI / LEAD CUBE / FÜHRUNGSKLOTZ		1
4	30.2016-006	0	DESKA / BOARD / PLATTE	HR 40x12	1
5	30.3510-004	0	TRUBKA / TUBE / ROHR	TR 8x 1	2
6	30.9010-003	0	DRZAK / HOLDER / HALTER	P1.5x10	2
7	30.M210-008	0	LISTA / TRIM / LEISTE	HR 25x6	1
8	30.M310-002	3	LISTA VODICI / LEAD TRIM / FÜHRUNGSLEISTE	HR 90x20	1
9	30.M310-004	1	KONZOLA / CONSOLE / KONSOLE		1
10	30.M310-056 (2)	0	KRYT PASU / BELT COVER / BANDABDECKUNG	P 2x95	1
11	30.M310-057 (2)	0	KRYT PASU / BELT COVER / BANDABDECKUNG	P 2x95	1
12	30.Y310-008	0	DRZAK / HOLDER / HALTER	P3-50	1
13	90.001.25.016	0	SROUB IMBUS / ALLEN HEAD BOLT / IMBUSSCHRAUBE	M6X12	8
14	90.001.25.031	0	SROUB IMBUS / ALLEN HEAD BOLT / IMBUSSCHRAUBE	8x16	1
15	90.001.25.033	0	SROUB IMBUS / ALLEN HEAD BOLT / IMBUSSCHRAUBE	8x25	2
16	90.001.25.105	0	SROUB IMBUS / ALLEN HEAD BOLT / IMBUSSCHRAUBE	M8X18	6
17	90.002.20.022	0	SROUB STAVECI / ADJUSTMENT BOLT / STELLSCHRAUBE	SROUB M8X30	2
18	90.101.55.001	0	MATICE / NUT / MUTTER	MATICE M8	2
19	90.163.00.002	0	PODLOZKA / WASHER / UNTERLEGSCHEIBE	PODLOZKA 8	2
20	94.008.003	0	PAKA UPINACI / ATTACHMENT LEVER / SPANNHEBEL	M8x40	1
21	94.202.002	0	REDUKCE / REDUCTION / ADAPTOR / REDUKTION	REDUKCE 6/R1/4"	2
22	96.081.001	0	KROUZEK TESNICI / SEAL RING / DICHTUNGSRING	23x15x3	1
23	99.260.003	0	VENTIL / VALVE / VENTIL	1/4"	1

1 z ks. stroje zruseno 30.M310-003, 30.Y310-007 070/061 11.4.2011 VINOHRADSKY
2.ZRUS.KRYT PASU 30.M310-006 A NAHR.30.M310-056,ZRUS.KRYT 30.M310-007 A NAHR.30.M310-057. 090/ZM108 14.5.2014 SLEZACKOVA

Cislo Sestavy/Number of assembly/Nummer der Baugruppe; Verze (Ver.)/Version/Version; Nazev sestavy/Assembly title/Name der Baugruppe; Pozice (Poz.)/Position/Position;
Objednaci cislo/Purchase order number/Bestellnummer; Nazev polozky/Volume title/Name der Position; Rozmer/Stock size/Abmessung

7.20. Regulace přítlaku / Pressure regulation / Schnittdruckregulation

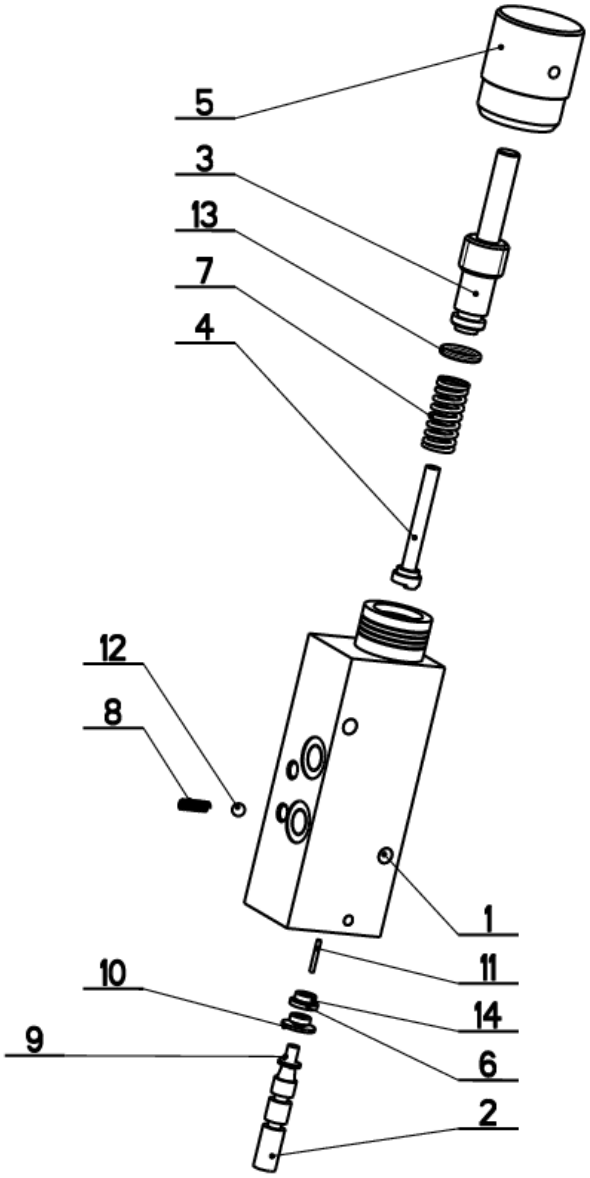

NAZEV SESTAVY	CISLO SESTAVY	STROJ
REGULACE PRITLAKU	001.2016-000	STG340DGS
	Konstruoval:	&konstruoval
	Datum:	19. 02.2010
	Meritko:	1:2

7.21. Kusovník / Piece list / Stückliste - Regulace přítlaku / Pressure regulation / Schnittdruckregulation

Cislo Sestavy	Ver.	Nazev sestavy
201.2016-000	0	REGULACE PRITLAKU/PRESSURE REGULATION/SCHNITTDRUCKREGULATION

Poz.	Objednaci cislo	Ver.	Nazev polozky	Rozmer	Ks
1	30.2016-001	2	TELESO / BODY / KÔRPER	HR 40 x 40	1
2	30.2016-002	0	JEHLA / NEEDLE / NADEL	KR 8	1
3	30.2016-003	0	SROUB / BOLT / SCHRAUBE	d 16	1
4	30.2016-004	0	CIDLO / SENSOR / SENSOR	d 10	1
5	30.2016-005	0	KOLECKO / WHEEL / ROLLE	d 32	1
6	30.2016-009	0	KROUZEK / RING / RING	TR 10x1	1
7	31.2016-007	0	PRUZINA / SPRING / FEDER	d 11.6xx1.6	1
8	31.2016-008	0	PRUZINA / SPRING / FEDER	0.25x3,6x12x9.5	1
9	90.099.002	0	SROUB PULKULATY / HALF ROUND BOLT / HALBRUNDSCHRAUBE	4x6	1
10	90.151.50.003	0	PODLOZKA / WASHER / UNTERLEGSCHEIBE	PODLOZKA 4	1
11	95.690.001	0	JEHLA / NEEDLE / NADEL	1.5x11.8	1
12	95.691.001	0	KULICKA LOZISKA / BALL / KUGEL	RB 4.5	1
13	96.001.003	0	KROUZEK O STATICKY / STATIC O RING / O-RING STATISCH	8X2	1
14	96.002.001	0	KROUZEK O DYNAMICKY / DYNAMIC O RING / O-RING DYNAMISCH	4X2	2

Cislo Sestavy/Number of assembly/Nummer der Baugruppe; Verze (Ver.)/Version/Version; Nazev sestavy/Assembly title/Name der Baugruppe; Pozice (Poz.)/Position/Position; Objednaci cislo/Purchase order number/Bestellnummer; Nazev polozky/Volume title/Name der Position; Rozmer/Stock size/Abmessung

7.22. Kostka vodící / Lead cube / Führungsklotz

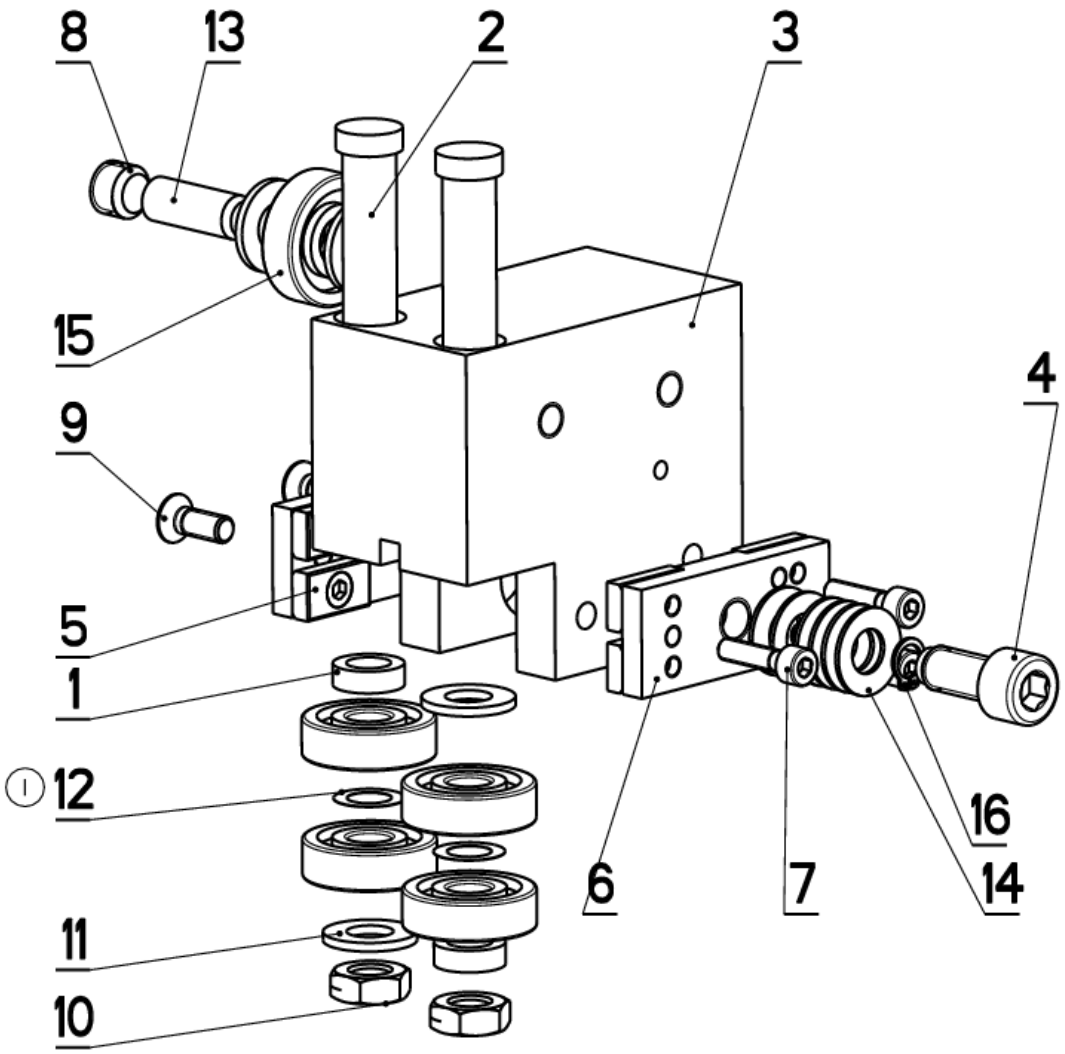

NAZEV SESTAVY	CISLO SESTAVY	STROJ
KOSTKA VODICI	201.Y310-300	IND360
	Konstruoval: HLADIL	
	Datum: 01. 11.2010	
	Meritko: 4:5	

7.23. Kusovník / Piece list / Stückliste - Kostka vodící / Lead cube / Führungsklotz

Cislo Sestavy	Ver.	Nazev sestavy
201.Y310-300	1	KOSTKA VODICI/LEAD CUBE/FÜHRUNGSKLOTZ

Poz.	Objednaci cislo	Ver.	Nazev polozky	Rozmer	Ks
1	30.C210-403	1	DISTANC / DISTANCE / DISTANZ	TR 16x3	2
2	30.Y310-212	0	EXCENTR / CAM / EXZENTER	d 15	2
3	30.Y310-301	1	KOSTKA VODICI / LEAD CUBE / FÜHRUNGSKLOTZ	HR 80x50	1
4	30.Y310-306	0	SROUB IMBUS / ALLEN HEAD BOLT / IMBUSSCHRAUBE	M10x25	1
5	30.Y310-310	0	DRZAK TVRDOKOVU / POA HOLDER / HM-HALTER		1
6	30.Y310-320	0	DRZAK TVRDOKOVU / POA HOLDER / HM-HALTER		1
7	90.001.25.010	0	SROUB IMBUS / ALLEN HEAD BOLT / IMBUSSCHRAUBE	M5X20	3
8	90.002.20.016	0	SROUB STAVECI / ADJUSTMENT BOLT / STELLSCHRAUBE	SROUB M12X10	1
9	90.011.27.017	0	SROUB ZAPUSTNY / COUNTERSINK BOLT / SENKSCHRAUBE	SROUB M6X16	2
10	90.101.55.002	0	MATICE / NUT / MUTTER	MATICE M10	2
11	90.150.50.006	0	PODLOZKA / WASHER / UNTERLEGSCHEIBE	PODLOZKA 10,5	4
12	90.154.50.001 (1)	0	PODLOZKA / WASHER / UNTERLEGSCHEIBE	10x16x0.1	2
13	90.301.02.001	0	KOLIK VALCOVY / CYLINDRICAL PIN SOFT / ZYLINDERSTIFT WEICH	KOLIK 10X28	1
14	90.350.02.005	0	PRUZINA TALIROVA / DISC SPRING / TELLERFEDER	20X10.2X1	6
15	95.001.014	0	LOZISKO / BEARING / LAGER	6200 2RS	5
16	95.800.002	0	KROUZEK POJIST.VNEJS / OUTSIDE SAFETY RING / SICHERUNGSRING AUßEN	POJISTNY KROUZEK 8	1

1.PRIDANA PODLOZKA 90.154.50.001. 277/ZM294 1.11.2010 SLEZACKOVA

7.24. Kostka vodící / Lead cube / Führungsklotz

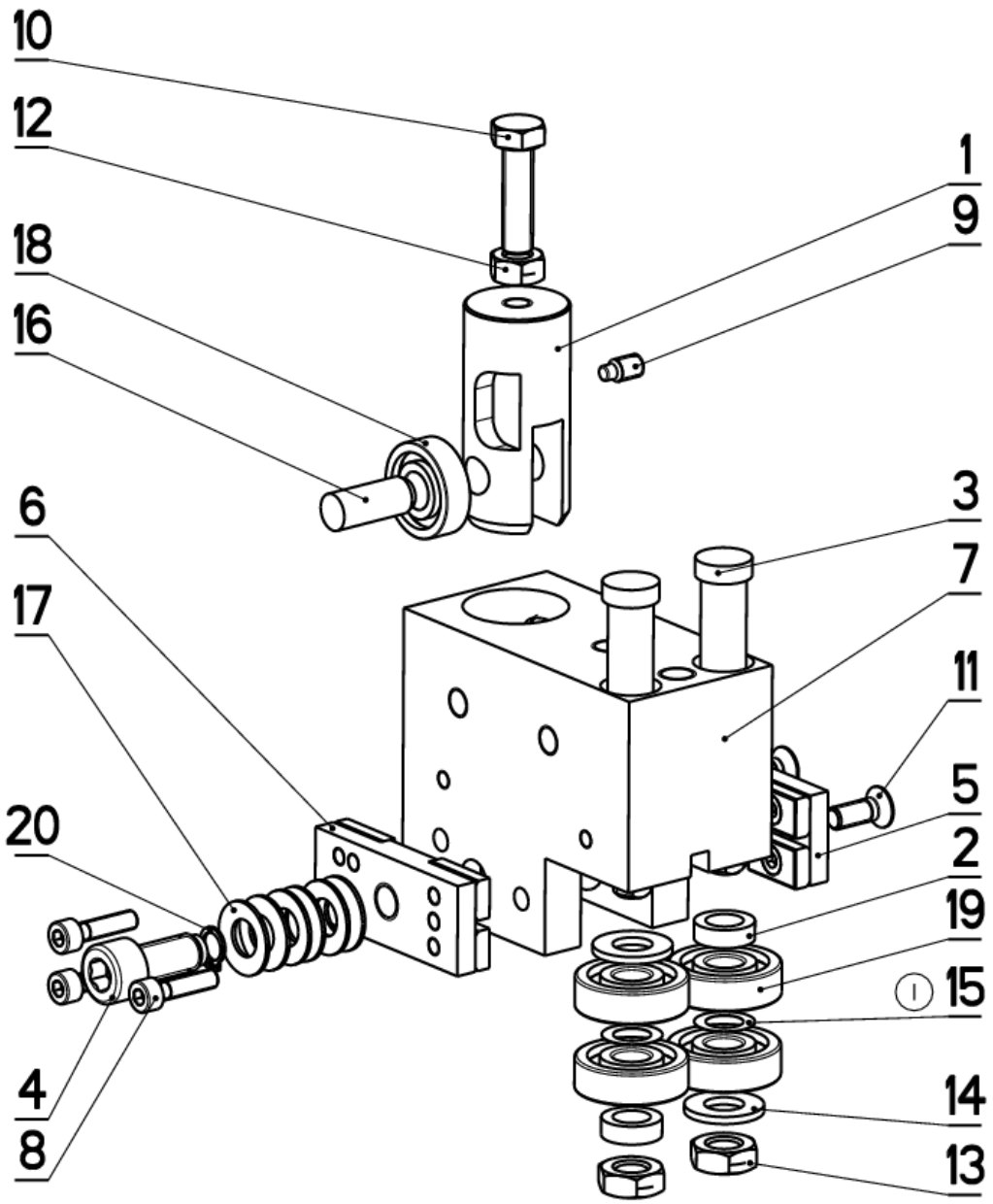

NAZEV SESTAVY	CISLO SESTAVY	STROJ
KOSTKA VODICI	201.Y310-400	IN360
	Konstruoval: HLADIL	
	Datum: 01. 11.2010	
	Meritko: 7:10	

Cislo Sestavy	Ver.	Nazev sestavy
201.Y310-400	1	KOSTKA VODICI/LEAD CUBE/FÜHRUNGSKLOTZ

Poz.	Objednaci cislo	Ver.	Nazev polozky	Rozmer	Ks
1	30.1810-102	3	DRZAK / HOLDER / HALTER	TYC 28	1
2	30.C210-403	1	DISTANC / DISTANCE / DISTANZ	TR 16x3	2
3	30.Y310-212	0	EXCENTR / CAM / EXZENTER	d 15	2
4	30.Y310-306	0	SROUB IMBUS / ALLEN HEAD BOLT / IMBUSSCHRAUBE	M10x25	1
5	30.Y310-310	0	DRZAK TVRDOKOVU / POA HOLDER / HM-HALTER		1
6	30.Y310-320	0	DRZAK TVRDOKOVU / POA HOLDER / HM-HALTER		1
7	30.Y310-401	3	KOSTKA VODICI / LEAD CUBE / FÜHRUNGSKLOTZ	HR 80x50	1
8	90.001.25.010	0	SROUB IMBUS / ALLEN HEAD BOLT / IMBUSSCHRAUBE	M5X20	3
9	90.004.2D.002	0	SROUB STAVECI / ADJUSTMENT BOLT / STELLSCHRAUBE	SROUB M6X12	1
10	90.005.55.017	0	SROUB 6HRANNY / 6 SIDED BOLT / SECHSKANTSCHRAUBE	SROUB M8X30	1
11	90.011.27.017	0	SROUB ZAPUSTNY / COUNTERSINK BOLT / SENKSCHRAUBE	SROUB M6X16	2
12	90.100.55.005	0	MATICE / NUT / MUTTER	MATICE _ M8	1
13	90.101.55.002	0	MATICE / NUT / MUTTER	MATICE M10	2
14	90.150.50.006	0	PODLOZKA / WASHER / UNTERLEGSCHEIBE	PODLOZKA 10,5	2
15	90.154.50.001 (1)	0	PODLOZKA / WASHER / UNTERLEGSCHEIBE	10x16x0.1	2
16	90.301.0Z.009	0	KOLIK VALCOVY / CYLINDRICAL PIN SOFT / ZYLINDERSTIFT WEICH	KOLIK 10X26	1
17	90.350.0Z.005	0	PRUZINA TALIROVA / DISC SPRING / TELLERFEDER	20X10.2X1	6
18	95.001.004	0	LOZISKO / BEARING / LAGER	6000 2RS	1
19	95.001.014	0	LOZISKO / BEARING / LAGER	6200 2RS	4
20	95.800.002	0	KROUZEK POJIST.VNEJS / OUTSIDE SAFETY RING / SICHERUNGSRING AUßEN	POJISTNY KROUZEK 8	1

1.PRIDANA PODLOZKA 90.154.50.001 . 277/ZM294 1.11.2010 SLEZACKOVA

7.26. Válec zvedací / Lifting cylinder / Hebezylinder

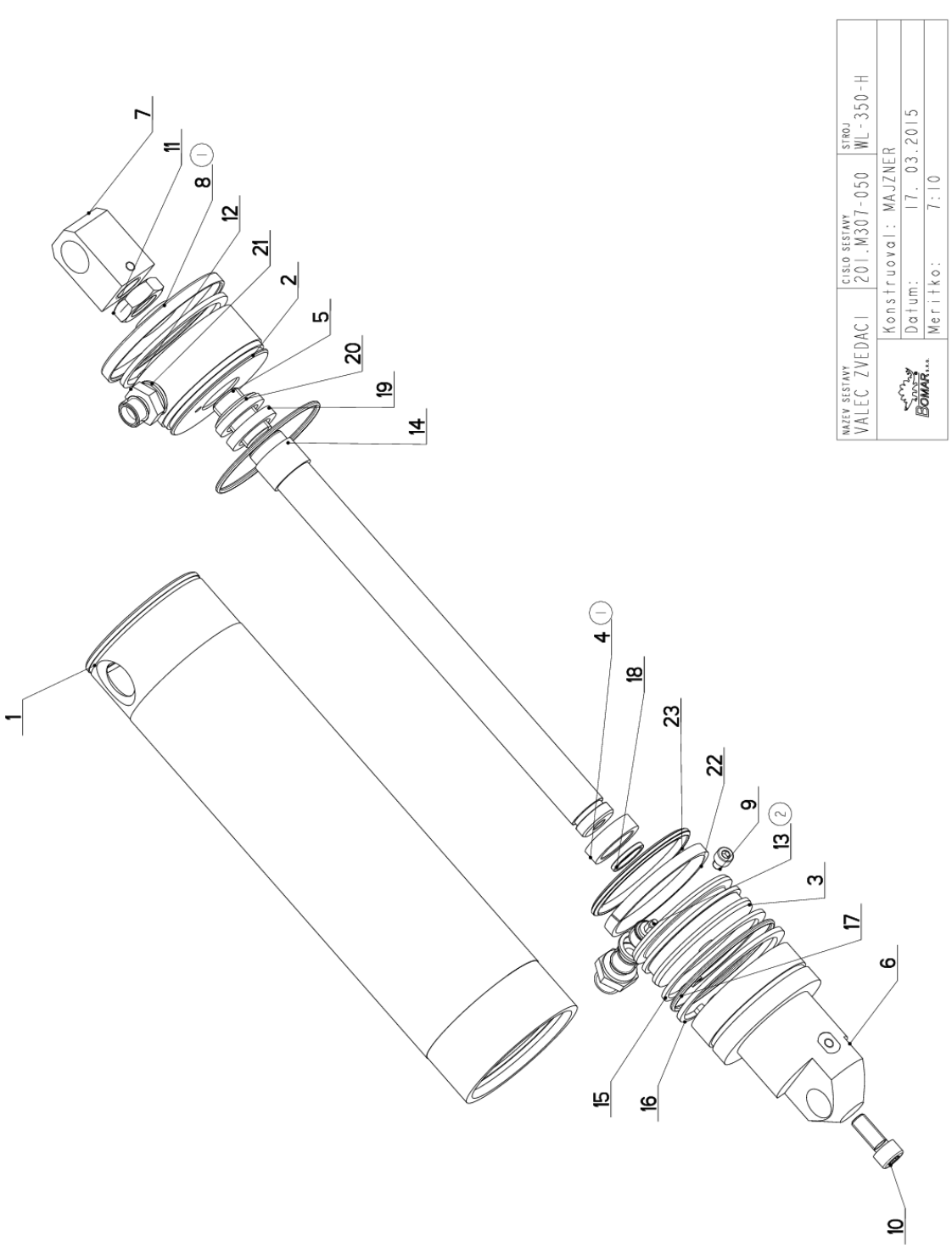

Cislo Sestavy	Ver.	Nazev sestavy
201.M307-050	2	VALEC ZVEDACI/LIFTING CYLINDER/HEBEZYLINDER

Poz.	Objednaci cislo	Ver.	Nazev polozky	Rozmer	Ks
1	30.0607-001	5	VALEC / ROLLER / ZYLINDER	TR 73/ 63H8	1
2	30.1807-001	1	VIKO / COVER / DECKEL	TYC 70	1
3	30.2907-003	1	PIST / PISTON / KOLBEN	D65	1
4	30.K107-005 (1)	0	DISTANC / DISTANCE / DISTANZ	TR 28x4	1
5	30.LW07-001	2	PISTNICE / PISTON ROD / KOLBENSTANGE	d20	1
6	30.M407-051	2	VIKO / COVER / DECKEL	d 65	1
7	30.M407-052	1	DRZAK / HOLDER / HALTER	HR 25x25	1
8	31.1807-006 (1)	0	VIKO / COVER / DECKEL		1
9	90.001.25.006	0	SROUB IMBUS / ALLEN HEAD BOLT / IMBUSSCHRAUBE	M5X6	1
10	90.001.25.032	0	SROUB IMBUS / ALLEN HEAD BOLT / IMBUSSCHRAUBE	8x20	1
11	90.101.55.003	0	MATICE / NUT / MUTTER	MATICE M16	1
12	92.002.001	0	SROUBENI PRIME / DIRECT BOLTING / GERADE VERSCHRAUBUNG	GES 08LR	2
13	92.151.008 (2)	0	VENTIL POJISTNY / SAFETY VALVE / SICHERUNGSVENTIL	VPN-H 1/4"	1
14	95.700.003	0	POUZDRO / SLEEVE / BÜCHSE	20X15	1
15	95.801.011	0	SEGR DIRA / INSIDE SAFETY RING / SICHERUNGSRING INNEN	POJISTNY KROUZEK 63	1
16	95.801.012	0	SEGR DIRA / INSIDE SAFETY RING / SICHERUNGSRING INNEN	POJISTNY KROUZEK 65	2
17	96.001.016	0	O-KROUZEK STATIC / STATIC O RING / O-RING STATISCH	60X2	2
18	96.002.007	0	KROUZEK O DYNAMICKY / DYNAMIC O RING / O-RING DYNAMISCH	16x2 NBR 70SH	1
19	96.041.002	0	TESNENI / SEALING / DICHTUNG	601-20x28x5	1
20	96.060.002	0	KROUZEK STIRACI / SCRAPER RING / ABSTREIFRING	KROUZEK STIRACI 20	1
21	96.082.002	0	TESNENI / SEAL RING / DICHTUNGSRING	13/17x1.5 CU	3
22	96.084.002	0	KROUZEK VODICI / LEAD RING / FÜHRUNGSRING	GP6500630-T47	1
23	96.900.016	0	TESNENI KOMBINOVANE / COMBINATION SEALING / KOMBIDICHTUNG	PT0200630	1

1.PRID. DISTANC 30.K107-005,VIKO 31.1807-006. 095/ZM101 6.5.2011 SLEZACKOVA

2.VENTIL 92.151.001 PRECISLOVAN NA 92.151.008. 222/ZM211 29.7.2013 SLEZACKOVA

Cislo Sestavy/Number of assembly/Nummer der Baugruppe; Verze (Ver.)/Version/Version; Nazev sestavy/Assembly title/Name der Baugruppe; Pozice (Poz.)/Position/Position;
Objednaci cislo/Purchase order number/Bestellnummer; Nazev polozky/Volume title/Name der Position; Rozmer/Stock size/Abmessung

7.28. Ovladací panel / Control panel / Bedienpult

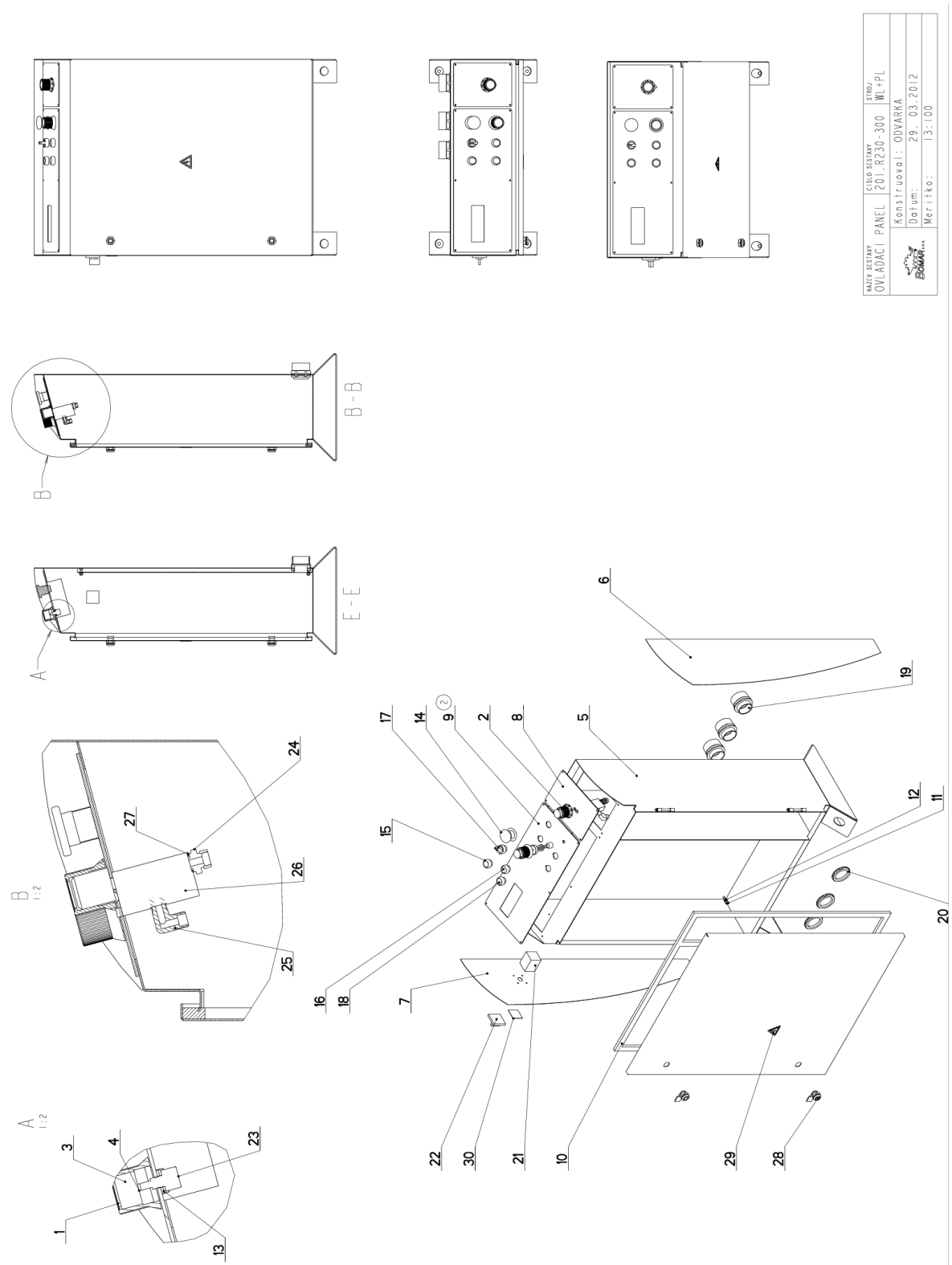

Cislo Sestavy	Ver.	Nazev sestavy
201.R230-300	2	OVLADACI PANEL/CONTROL PANEL/BEDIENPULT

Poz.	Objednaci cislo	Ver.	Nazev polozky	Rozmer	Ks
1	30.6130-012	0	VIKO / COVER / DECKEL	P 0.5x 30x30	2
2	30.6130-018	0	HLAVICE / HEAD / KOPF	VYLISEK	1
3	31.6130-008	0	HLAVICE / HEAD / KOPF		1
4	30.R230-010	0	MEZIKUS / INTERMEDIATE PIECE / PASSSTÜCK	d 32	1
5	30.R230-201	3	SKRIN / BOX / KASTEN		1
6	30.R230-204	0	PLECH / PLATE / BLECH	P 1x220	1
7	30.R230-206	1	PLECH / PLATE / BLECH	P 1x220	1
8	30.R230-208	1	DESKA / BOARD / PLATTE	P 3x150	1
9	31.R230-207 (2)	0	PANEL ELEKTRO / ELECTRO PANEL / PANEL	P 3x205	1
10	61.352.001	0	TESNENI / SEALING / DICHTUNG	TESNENI 19x10	1
11	90.100.55.004	0	MATICE / NUT / MUTTER	MATICE _ M6	4
12	90.150.50.004	0	PODLOZKA / WASHER / UNTERLEGSCHEIBE	PODLOZKA 6,4	4
13	90.150.50.006	0	PODLOZKA / WASHER / UNTERLEGSCHEIBE	PODLOZKA 10,5	2
14	91.060.030	0	HLAVICE TOTAL STOP / TOTAL STOP HEAD / TASTE TOTAL STOP		1
15	91.060.031	0	HLAVICE / HEAD / KOPF		1
16	91.060.035	0	HLAVICE / HEAD / KOPF		1
17	91.060.051	0	PREPINAC / SWITCH / UMSCHALTER		1
18	91.060.053	0	HLAVICE / HEAD / KOPF		1
19	91.071.022	0	VYVODKA / BUSHING / TÜLLE		3
20	91.072.016	0	MATICE / NUT / MUTTER		3
21	91.170.003	0	SPINAC VACKOVY / CAM SWITCH / SCHALTER	LE2-12-1763	1
22	91.180.001	0	DESKA SPINACE / ELECTRIC BOARD / PLATINE		1
23	91.283.015	0	POTENCIOMETR / POTENTIOMETER / POTENTIOMETER	TP 195 4K7/N 20A	1
24	92.002.103	0	SROUBENI PRIME / DIRECT BOLTING / GERADE VERSCHRAUBUNG	G 1/4" tr12	1
25	92.004.001	0	SROUBENI UHLOVE / ANGLE BOLTING / WINKELVERSCHRAUBUNG	37701	1
26	92.152.001	0	VENTIL SKRTICI / CHOKE VALVE / DROSSELVENTIL	VS01-04/R 2.5-O	1
27	96.082.002	0	TESNENI / SEAL RING / DICHTUNGSRING	13/17x1.5 CU	1
28	99.104.002	0	ZAMEK / LOCK / SCHLOSS	ZAMEK CINSKY	2
29	99.900.045	0	SAMOLEPKA / STICKER / AUFKLEBER		1
30	99.900.046	0	SAMOLEPKA / STICKER / AUFKLEBER		1

1.ZRUS.VIKO 30.R230-203,PANEL 30.R230-202,2xCEP 30.7217-028,2XPOJ.KROUZEK 95.802.003 (PRIDANO DO SKRINE 30.R230-201). 061/ZM110 29.3.2012 SLEZACKOVA

2.ZRUS.SOUCASTI 30.R230-207 A 31.R330-003 A NAHR.31.R230-207. 007/ZM021 4.2.2014 SLEZACKOVA

7.30. Čelo / Head / Stirn

Cislo Sestavy
201.R311-100

Ver.
0

Nazev sestavy
CELO/HEAD/STIRN

Poz.	Objednaci cislo	Ver.	Nazev polozky	Rozmer	Ks
1	201.R311-150	0	VALEC SVERAKU / VICE CYLINDER / SCHRAUBSTOCKZYLINDER		1
2	30.R311-102	0	TYC VODICI / LEAD POLE / FUHRUNGSSTANGE	D 50h6	2
3	30.R311-103	0	JEDNOTKA ODMEROVANI / MEASURING UNIT / MESSEINHEIT	D 20	1
4	30.R311-110	1	DESKA / BOARD / PLATTE	P 30x150	1
5	90.005.55.055	0	SROUB 6HRANNY / 6 SIDED BOLT / SECHSKANTSCHRAUBE	SROUB M12X60	2
6	91.271.002	0	PASKA MAGNETICKA / MAGNETIC TAPE / MAGNETBAND	S 10	1

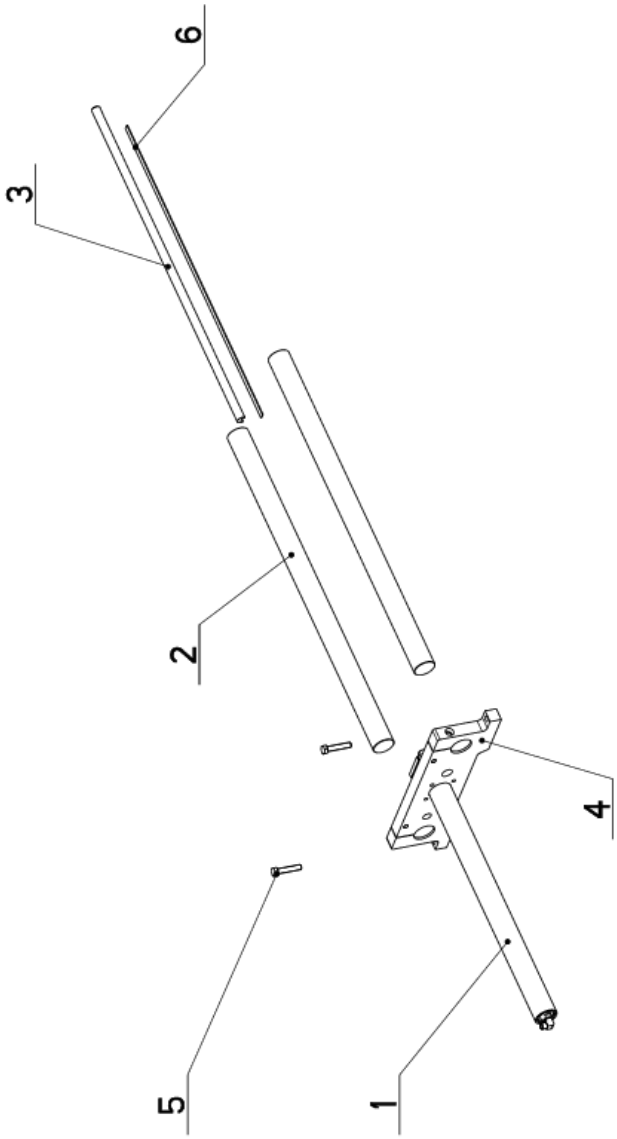

Cislo Sestavy/Number of assembly/Nummer der Baugruppe; Verze (Ver.)/Version/Version; Nazev sestavy/Assembly title/Name der Baugruppe; Pozice (Poz.)/Position/Position;
Objednaci cislo/Purchase order number/Bestellnummer; Nazev polozky/Volume title/Name der Position; Rozmer/Stock size/Abmessung

7.31. Válec svěráku / Vice cylinder / Schraubstockzylinder

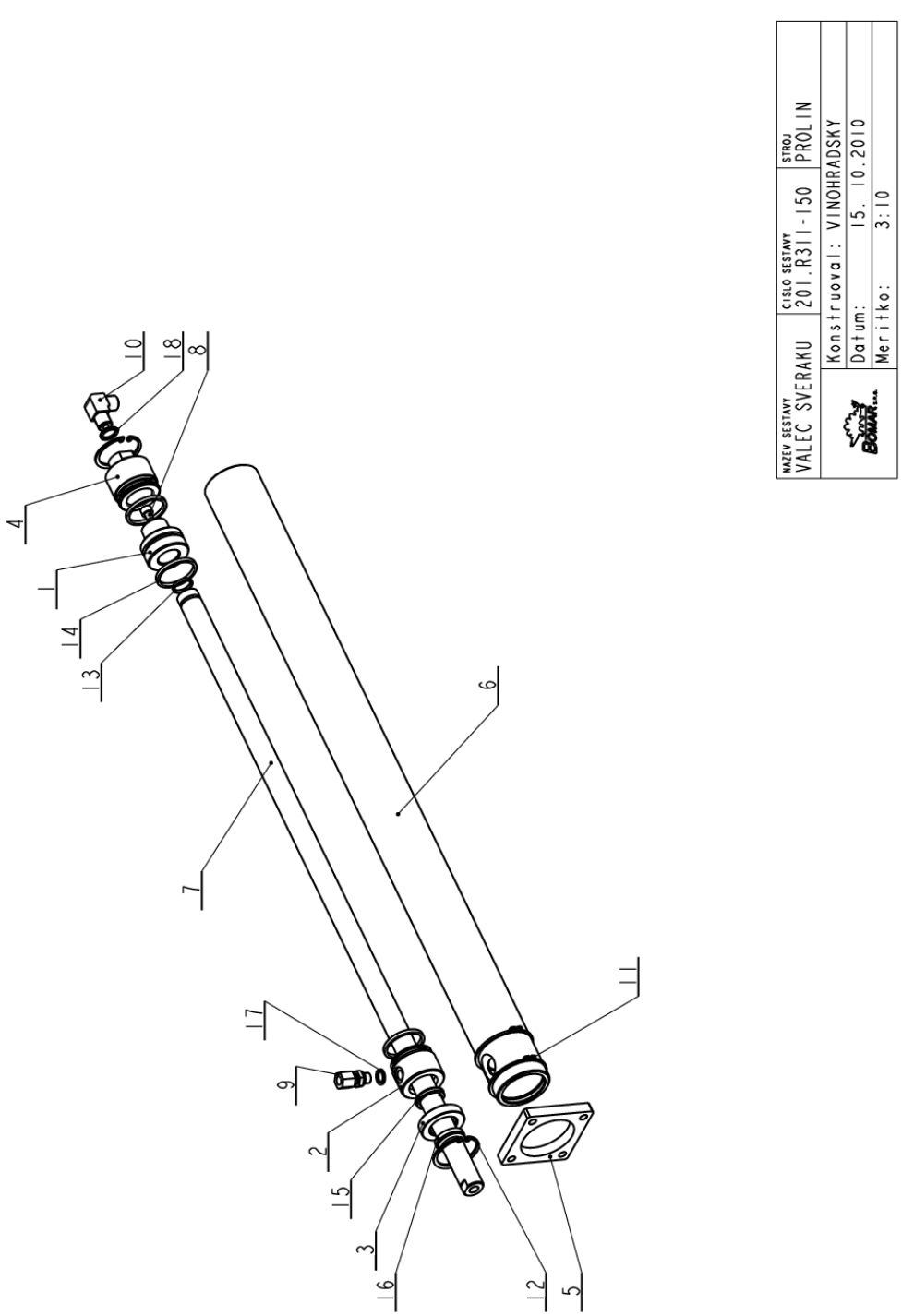

Cislo Sestavy	Ver.	Nazev sestavy
201.R311-150	0	VALEC SVERAKU/VICE CYLINDER/SCHRAUBSTOCKZYLINDER

Poz.	Objednaci cislo	Ver.	Nazev polozky	Rozmer	Ks
1	30.2107-001	0	PIST / PISTON / KOLBEN	d 45	1
2	30.2107-002	0	PRIRUBA / FLANGE / FLANSCHE	TYC 45	1
3	30.2107-003	0	VIKO / COVER / DECKEL	d 45	1
4	30.2107-004	0	VIKO / COVER / DECKEL	d45	1
5	30.D311-109	0	PRILOZKA / STRAP / LASCHE	HR 70x10	1
6	30.R311-151	0	VALEC PODAVACE / FEEDER CYLINDER / VORSCHUBWALZE	TRUBKA 52/40	1
7	30.R311-152	0	PISTNICE / PISTON ROD / KOLBENSTANGE	TYC 20	1
8	90.001.25.019	0	SROUB IMBUS / ALLEN HEAD BOLT / IMBUSSCHRAUBE	M6X25	1
9	92.002.102	0	SROUBENI / BOLTING / VERSCHRAUBUNG	S-GEV-8LLR	1
10	92.004.001		SROUBENI UHLOVE / ANGLE BOLTING / WINKELVERSCHRAUBUNG	37701	1
11	95.800.019	0	KROUZEK POJIST.VNEJS / OUTSIDE SAFETY RING / SICHERUNGSRING AUßEN	POJISTNY KROUZEK 52	2
12	95.801.006	0	KROUZEK POJIST.VNITR / INSIDE SAFETY RING / SICHERUNGSRING INNEN	POJISTNY KROUZEK 42	2
13	96.002.007	0	KROUZEK O DYNAMICKY / DYNAMIC O RING / O-RING DYNAMISCH	16X2	1
14	96.002.017	0	KROUZEK O DYNAMICKY / DYNAMIC O RING / O-RING DYNAMISCH	34X3	3
15	96.041.002		TESNENI / SEALING / DICHTUNG	20x28x4	1
16	96.060.002	0	KROUZEK STIRACI / SCRAPER RING / ABSTREIFRING	KROUZEK STIRACI 20	1
17	96.082.001	0	TESNENI / SEALING / DICHTUNG	KROUZEK CU 10/14	1
18	96.082.002	0	TESNENI / SEALING / DICHTUNG	KROUZEK CU 13/17	1

Cislo Sestavy/Number of assembly/Nummer der Baugruppe; Verze (Ver.)/Version/Version; Nazev sestavy/Assembly title/Name der Baugruppe; Pozice (Poz.)/Position/Position;
Objednaci cislo/Purchase order number/Bestellnummer; Nazev polozky/Volume title/Name der Position; Rozmer/Stock size/Abmessung

7.33. Podstavec / Base / Untersatz

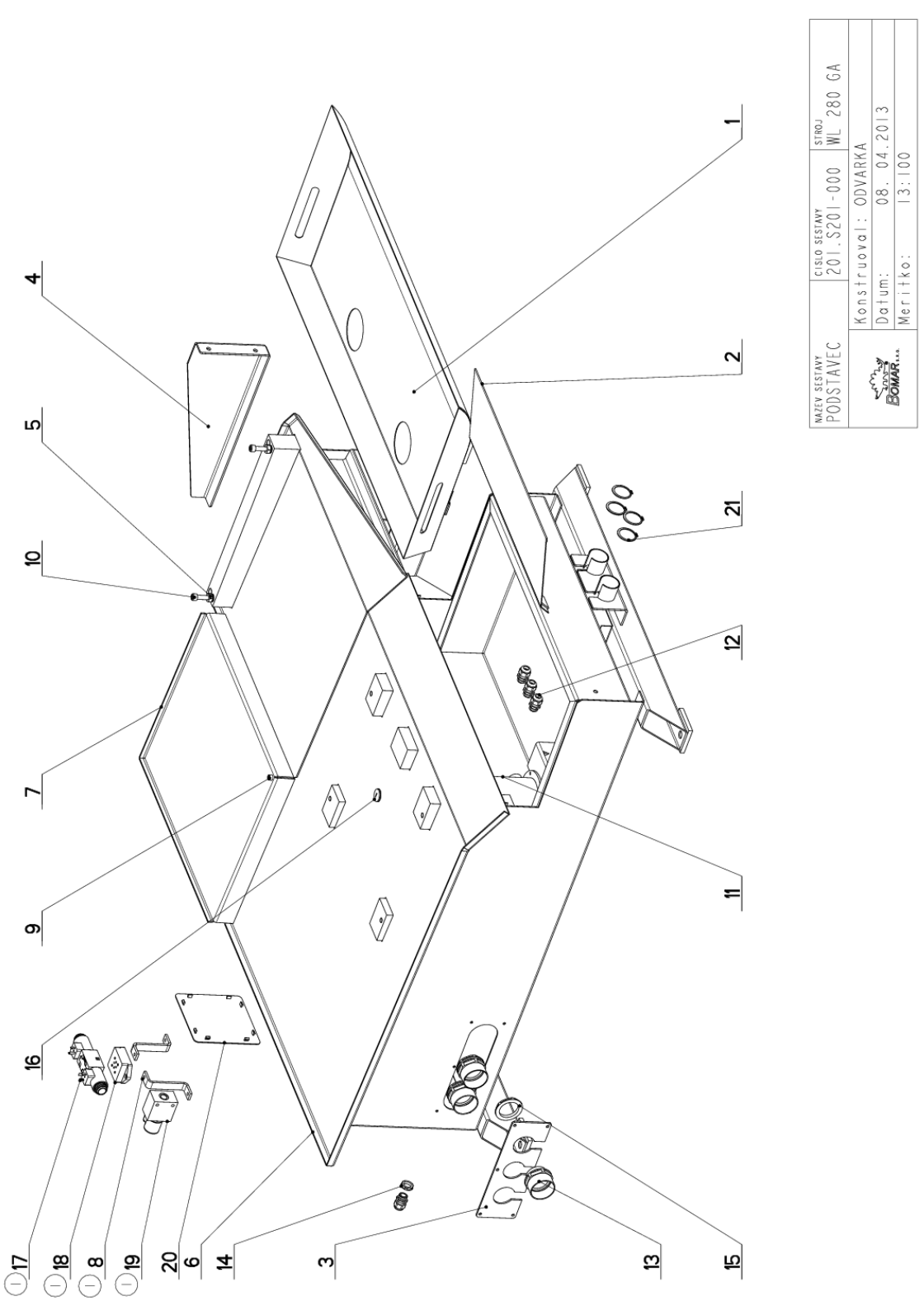

Cislo Sestavy	Ver.	Nazev sestavy
201.S201-000	1	PODSTAVEC/BASE/UNTERSATZ

Poz.	Objednaci cislo	Ver.	Nazev polozky	Rozmer	Ks
1	30.M201-010	2	VANA / TANK / WANNE		1
2	30.M301-020	0	SKLUZ / SLIDE / RUTSCH		1
3	30.R201-056	1	VIKO / COVER / DECKEL	P 4x100	1
4	30.R301-008	0	DRZAK / HOLDER / HALTER	P4x212	1
5	30.R412-055	1	SROUB STAVECI / ADJUSTMENT BOLT / STELLSCHRAUBE	6HR 19	2
6	30.S201-001	0	PODSTAVEC / BASE / UNTERSATZ		1
7	30.S201-010	0	KRYT / COVER / ABDECKUNG	P 3x516.4	1
8	30.S201-011 (1)	0	DRZAK / HOLDER / HALTER	HR 20x5	2
9	90.001.25.038	0	SROUB IMBUS / ALLEN HEAD BOLT / IMBUSSCHRAUBE	M8X50	1
10	90.001.25.175	0	SROUB IMBUS / ALLEN HEAD BOLT / IMBUSSCHRAUBE	M10X90 8.8	2
11	91.020.015	0	CERPADLO / PUMP / PUMPE	3COA4-12	1
12	91.070.012	0	VYVODKA / BUSHING / TŮLLE	M20x1.5	4
13	91.071.022	0	VYVODKA / BUSHING / TŮLLE		3
14	91.072.012	0	MATICE / NUT / MUTTER		1
15	91.072.016	0	MATICE / NUT / MUTTER		3
16	91.074.013	0	UCPAVKA / PLUG / STOPFEN	M25x1,5	1
17	92.101.024 (1)	0	VENTIL / VALVE / VENTIL	PRM2-043Z11	1
18	92.105.001 (1)	0	DESKA / BOARD / PLATTE	473-4051-1	1
19	92.158.001 (1)	0	VENTIL / VALVE / VENTIL	S103_228_1	1
20	94.101.039	0	ZASLEPKA / PLUG / BLINDFLANSCH	154x154x4	1
21	95.800.016	0	SEGR HRIDEL. / OUTSIDE SAFETY RING / SICHERUNGSRING AUSSEN	POJISTNY KROUZEK 42	4

1.PRIDANO - 1xVENTIL ROZVODOVY 92.101.024,1xDESKA 92.105.001,1xVENTIL 92.158.001,2xDRZAK 30.S201-011. 106/ZM138
19.4.2013 SLEZACKOVA

Cislo Sestavy/Number of assembly/Nummer der Baugruppe; Verze (Ver.)/Version/Version; Nazev sestavy/Assembly title/Name der Baugruppe; Pozice (Poz.)/Position/Position;
Objednaci cislo/Purchase order number/Bestellnummer; Nazev polozky/Volume title/Name der Position; Rozmer/Stock size/Abmessung

7.35. Podstavec svěráku / Vice base / Schraubstockuntersatz

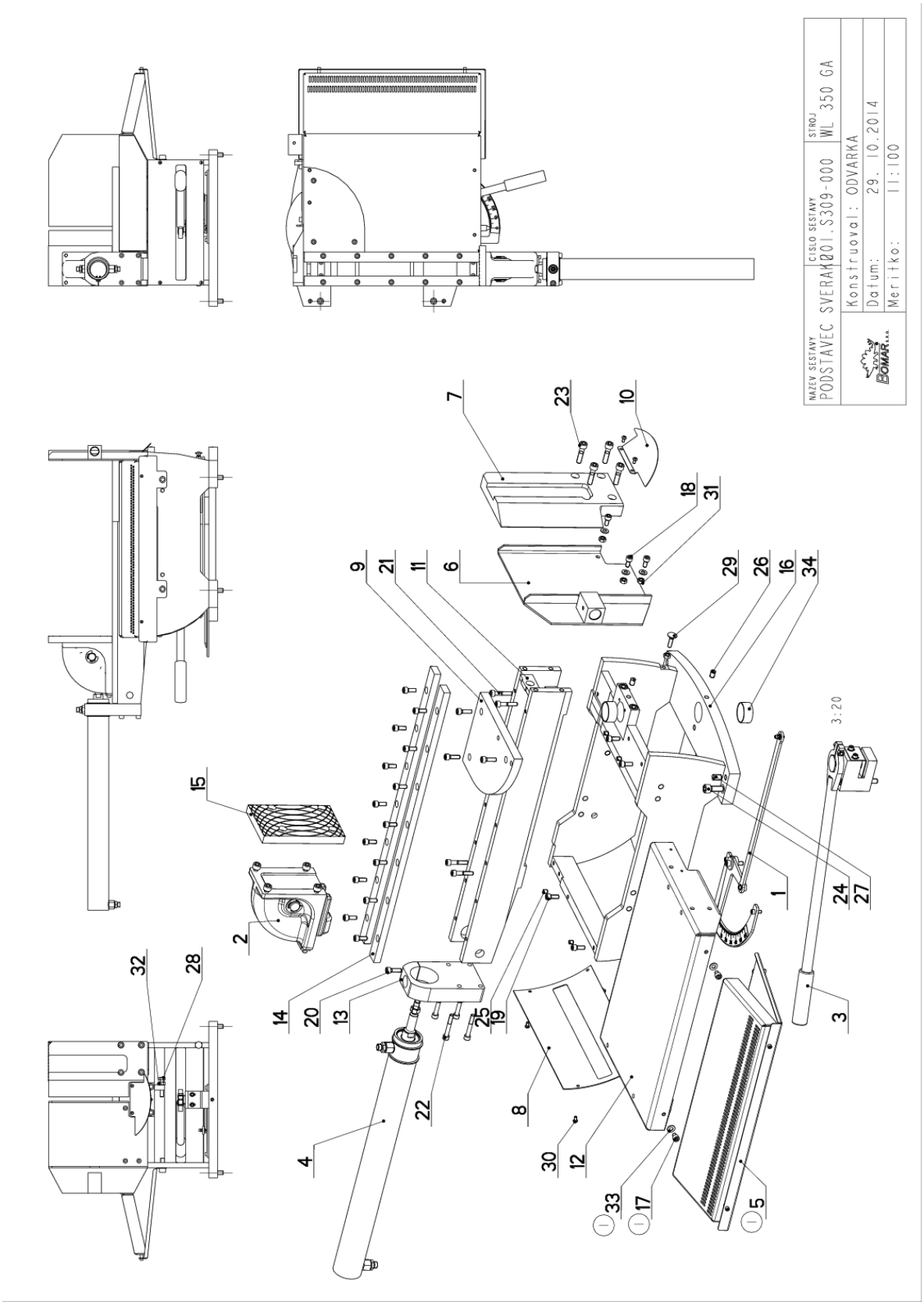

Cislo Sestavy	Ver.	Nazev sestavy
201.S309-000	1	PODSTAVEC SVERAKU/VICE BASE/SCHRAUBSTOCKUNTERSATZ

Poz.	Objednaci cislo	Ver.	Nazev polozky	Rozmer	Ks
1	201.G209-020	0	ODMEROVANI / MEASURING / GEHRUNGSMESSUNG		1
2	201.M203-250	1	SVERAK / VICE / SCHRAUBSTOCK	SESTAVA	1
3	201.M209-010	0	BRZDA / BRAKE / BREMSE		1
4	201.M307-100	0	VALEC SVERAKU / VICE CYLINDER / SCHRAUBSTOCKZYLINDER		1
5	201.S309-050 (1)	0	SKLUZ / SLIDE / RUTSCH		1
6	30.G309-002	1	CELIST PEVNA / SOLID JAW / FESTE BACKE		1
7	30.G309-003	1	CELIST / BOARD / PLATTE	PASOVINA 170x30	1
8	30.G309-007	0	KRYT / COVER / ABDECKUNG	P 1,5x181	1
9	30.G309-008	0	LISTA / TRIM / LEISTE	P 20x180	1
10	30.G309-010	0	KRYT / COVER / ABDECKUNG	P 1x82	1
11	30.G309-052	1	TELESO SVERAKU / VICE BODY / SCHRAUBSTOCKKÖRPER		1
12	30.G309-054	2	STUL / PLATE / BLECH	P 4x457	1
13	30.M203-201	1	DESKA / BOARD / PLATTE	P 35x100	1
14	30.M303-002	1	LISTA VODICI / LEAD TRIM / FÜHRUNGSLEISTE	HR 30x15	2
15	30.M303-040	0	DESKA / BOARD / PLATTE	HR 120x20	1
16	30.S309-001	1	PODSTAVEC SVERAKU / VICE BASE / SCHRAUBSTOCKUNTERSATZ		1
17	90.001.25.028 (1)	0	SROUB IMBUS / ALLEN HEAD BOLT / IMBUSSCHRAUBE	M8X10	2
18	90.001.25.031	0	SROUB IMBUS / ALLEN HEAD BOLT / IMBUSSCHRAUBE	8x16	3
19	90.001.25.032	0	SROUB IMBUS / ALLEN HEAD BOLT / IMBUSSCHRAUBE	8x20	18
20	90.001.25.033	0	SROUB IMBUS / ALLEN HEAD BOLT / IMBUSSCHRAUBE	8x25	5
21	90.001.25.036	0	SROUB IMBUS / ALLEN HEAD BOLT / IMBUSSCHRAUBE	M8X40	4
22	90.001.25.039	0	SROUB IMBUS / ALLEN HEAD BOLT / IMBUSSCHRAUBE	M8X55	4
23	90.001.25.050	0	SROUB IMBUS / ALLEN HEAD BOLT / IMBUSSCHRAUBE	M10X40	4
24	90.001.25.058	0	SROUB IMBUS / ALLEN HEAD BOLT / IMBUSSCHRAUBE	M12X30	4
25	90.002.2D.011	0	SROUB STAVECI / ADJUSTMENT BOLT / STELLSCHRAUBE	SROUB M8X10	4
26	90.002.2D.014	0	SROUB STAVECI / ADJUSTMENT BOLT / STELLSCHRAUBE	SROUB M10X16	2
27	90.002.2D.018	0	SROUB STAVECI / ADJUSTMENT BOLT / STELLSCHRAUBE	SROUB M12X20	5
28	90.005.55.028 (1)	0	SROUB 6HRANNY / 6 SIDED BOLT / SECHSKANTSCHRAUBE	SROUB M10X50	1
29	90.006.50.001	0	SROUB VRATOVY / /	M8x30	1
30	90.013.27.003	0	SROUB / BOLT / SCHRAUBE	M5X10	6
31	90.100.55.005	0	MATICE / NUT / MUTTER	MATICE _ M8	4
32	90.100.55.006	0	MATICE / NUT / MUTTER	MATICE _ M10	1
33	90.150.50.005	0	PODLOZKA / WASHER / UNTERLEGSCHEIBE	PODLOZKA 8,4	5
34	95.700.045	0	POUZDRO / SLEEVE / BÜCHSE	KU 40x20	2

1.PRIDAN SKLUZ 201.S309-050,2xSROUB M8x10(90.001.25.028),2xPODLOZKA 8.4(90.150.50.005). 190/ZM225 29.10.2014 SLEZACKOVA

Cislo Sestavy/Number of assembly/Nummer der Baugruppe; Verze (Ver.)/Version/Version; Nazev sestavy/Assembly title/Name der Baugruppe; Pozice (Poz.)/Position/Position;
Objednaci cislo/Purchase order number/Bestellnummer; Nazev polozky/Volume title/Name der Position; Rozmer/Stock size/Abmessung

7.37. Odměřování / Measuring / Gehrungsmessung

Cislo Sestavy 201.G209-020

Ver. 0

Nazev sestavy ODMEROVANI/MEASURING/GEHRUNGSMESSUNG

Poz.	Objednaci cislo	Ver.	Nazev polozky	Rozmer	Ks
1	30.M209-021	0	CEP / LUG / BOLZEN	d 30	1
2	30.M209-022	0	UKAZATEL / INDICATOR / ZEIGER	P 5x113	1
3	30.G209-023	0	PLECH / SCALE / SKALA	P 5x180	1
4	30.G209-027	0	STUPNICE / SCALE / SKALA	P 0,5x117	1
5	90.001.25.017	0	SROUB IMBUS CERNENY / ALLEN HEAD BOLT / IMBUSSCHRAUBE	M6X16	2
6	90.151.50.005	0	PODLOZKA / WASHER / UNTERLEGSCHEIBE	PODLOZKA 8	1
7	90.001.55.083	0	SROUB IMBUS / ALLEN HEAD BOLT / IMBUSSCHRAUBE	M8X30	1
8	95.001.002	0	LOZISKO / BEARING / LAGER	624 2RS	2
9	30.M209-029	0	TYC / POLE / STANGE	HR 16x5	1
10	90.001.25.003	0	SROUB IMBUS / ALLEN HEAD BOLT / IMBUSSCHRAUBE	M4X12	1
11	90.150.50.002	0	PODLOZKA / WASHER / UNTERLEGSCHEIBE	PODLOZKA 4,3	5
12	90.001.25.004	0	SROUB IMBUS / ALLEN HEAD BOLT / IMBUSSCHRAUBE	M4X16	1
13	90.100.55.002	0	MATICE / NUT / MUTTER	MATICE - M4	1

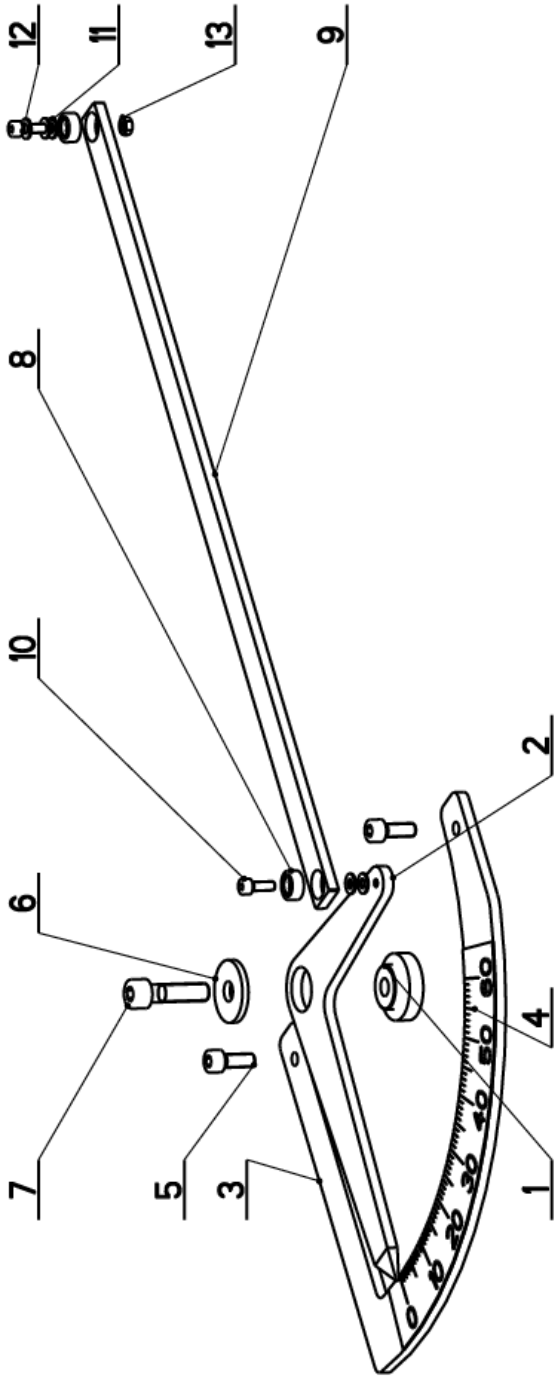

Cislo Sestavy/Number of assembly/Nummer der Baugruppe; Verze (Ver.)/Version/Version; Nazev sestavy/Assembly title/Name der Baugruppe; Pozice (Poz.)/Position/Position; Objednaci cislo/Purchase order number/Bestellnummer; Nazev polozky/Volume title/Name der Position; Rozmer/Stock size/Abmessung

7.38. Svěrák / Vice / Schraubstock

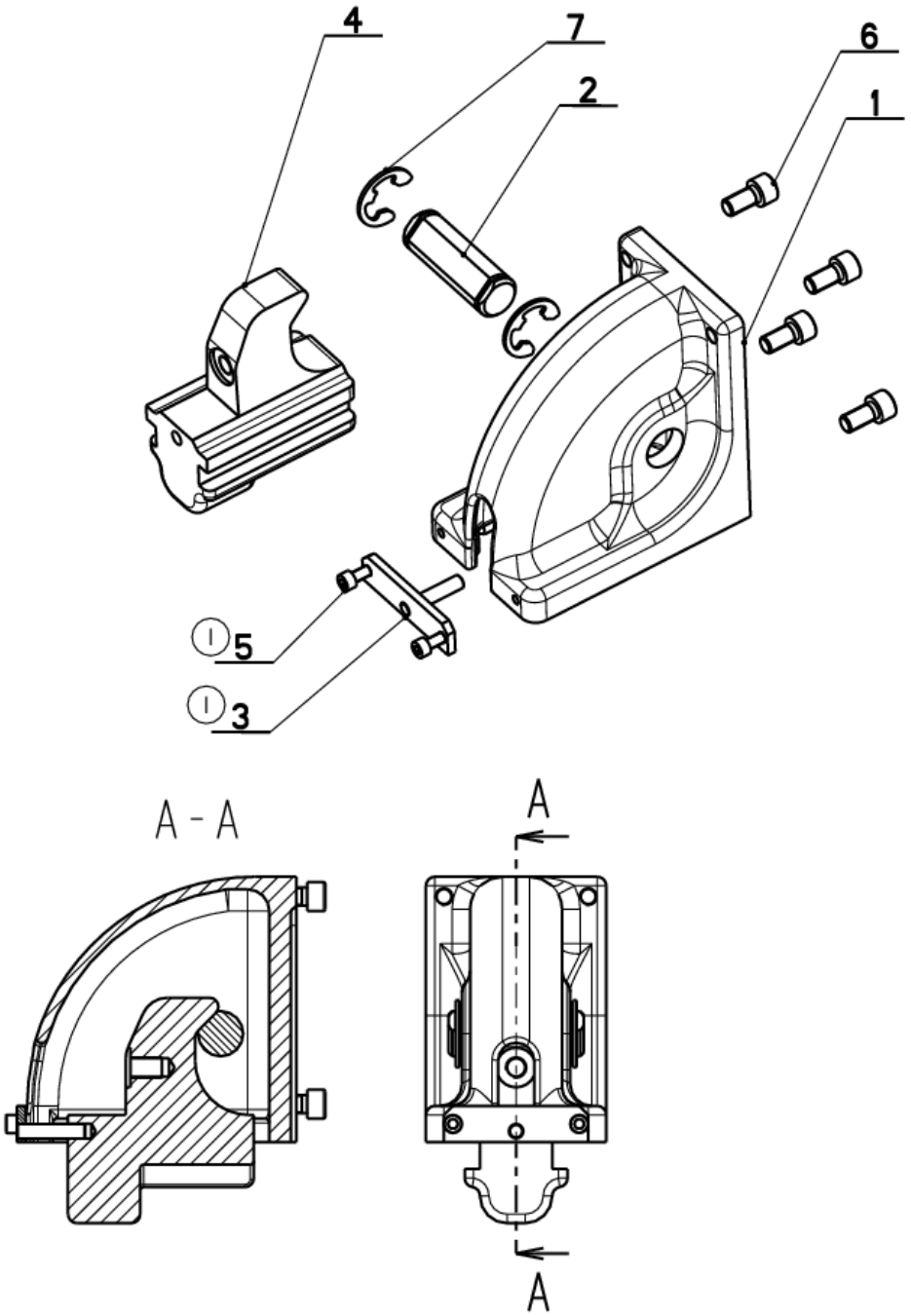

NAZEV SESTAVY	CISLO SESTAVY	STROJ
SVERAK	201.M203-250	WL
	Konstruoval: MAJZNER	
	Datum: 19. 07.2012	
	Meritko: 33:100	

Cislo Sestavy	Ver.	Nazev sestavy
201.M203-250	1	SVERAK/VICE/SCHRAUBSTOCK

Poz.	Objednaci cislo	Ver.	Nazev polozky	Rozmer	Ks
1	30.M203-003	3	TELESO SVERAKU / VICE BODY / SCHRAUBSTOCKKÖRPER	ODLITEK	1
2	30.M203-005	0	CEP / LUG / BOLZEN	D 25	1
3	30.M203-042 (1)	0	DESKA / BOARD / PLATTE		1
4	30.M203-251	1	DORAZ / STOP PIECE / ANSCHLAG	ODLITEK	1
5	90.001.25.016 (1)	0	SROUB IMBUS / ALLEN HEAD BOLT / IMBUSSCHRAUBE	M6X12	2
6	90.001.25.046	0	SROUB IMBUS / ALLEN HEAD BOLT / IMBUSSCHRAUBE	M10X20	4
7	95.802.005	0	KROUZEK POJIST.VNEJS / OUTSIDE SAFETY RING / SICHERUNGSRING AUßEN	POJISTNY KROUZEK 19	2

1.ZRUSEN 2x STAVECI SROUB 90.004.2D.004, PRIDANA DESKA 30.M203-042, SROUB M6x12 90.001.25.016, 182/ZM232, 18.7.2012, ODVARKA

Cislo Sestavy/Number of assembly/Nummer der Baugruppe; Verze (Ver.)/Version/Version; Nazev sestavy/Assembly title/Name der Baugruppe; Pozice (Poz.)/Position/Position; Objednaci cislo/Purchase order number/Bestellnummer; Nazev polozky/Volume title/Name der Position; Rozmer/Stock size/Abmessung

7.40. Brzda / Brake / Bremse

Cislo Sestavy
201.M209-010

Ver.
0

Nazev sestavy
BRZDA/BRAKE/BREMSE

Poz.	Objednaci cislo	Ver.	Nazev polozky	Rozmer	Ks
1	30.M209-011	0	KOSTKA / CUBE / WÜRFEL	HR 70x50	1
2	30.M209-013	0	PLECH / PLATE / BLECH	P 1,5x50	1
3	90.005.55.XXX	0	SROUB GHRANNY / 6 SIDED BOLT / SECHSKANTSCHRAUBE	SROUB M24X50	1
4	30.LC02-003		PAKA / /	SVARENO	1
5	90.001.25.103	0	SROUB IMBUS / ALLEN HEAD BOLT / IMBUSSCHRAUBE	M10X75	2
6	90.001.25.016	0	SROUB IMBUS / ALLEN HEAD BOLT / IMBUSSCHRAUBE	M6X12	2
7	90.150.50.004	0	PODLOZKA / WASHER / UNTERLEGSCHEIBE	PODLOZKA 6,4	2
8	94.004.502	0	RUKOJET / HANDLE / GRIFF	D22	1
9	90.100.55.05		MATICE M8 ZN / /	MATICE M8	1
10	90.005.55.017	0	SROUB GHRANNY / 6 SIDED BOLT / SECHSKANTSCHRAUBE	SROUB M8X30	1

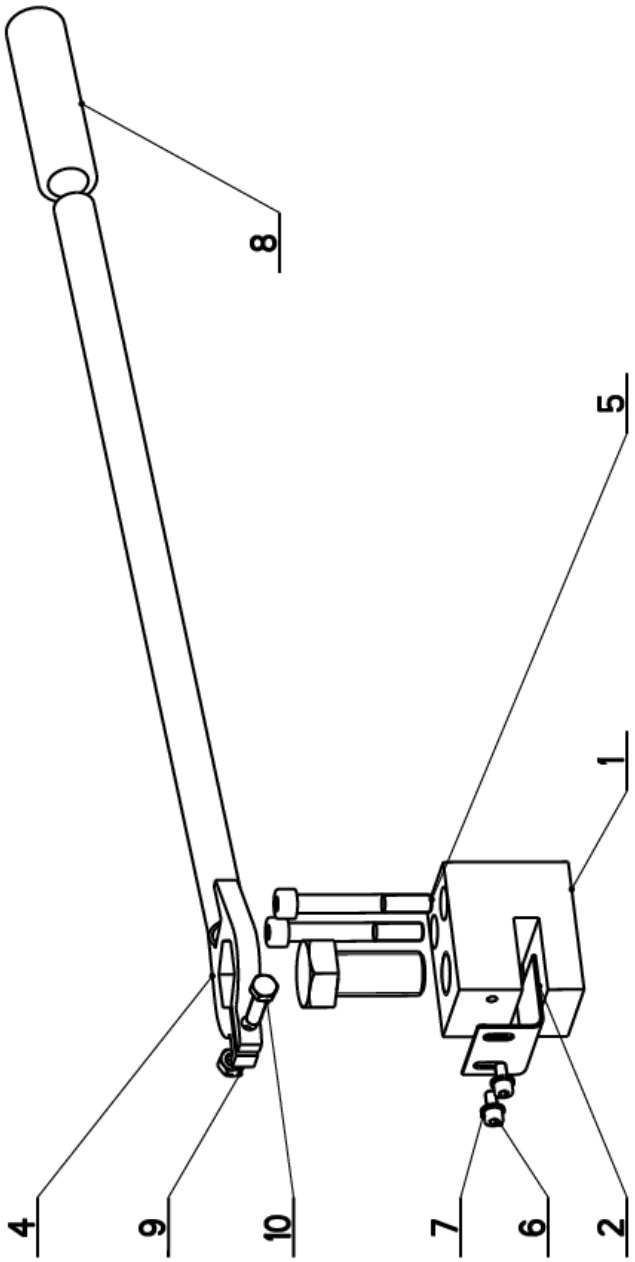

Cislo Sestavy/Number of assembly/Nummer der Baugruppe; Verze (Ver.)/Version/Version; Nazev sestavy/Assembly title/Name der Baugruppe; Pozice (Poz.)/Position/Position;
Objednaci cislo/Purchase order number/Bestellnummer; Nazev polozky/Volume title/Name der Position; Rozmer/Stock size/Abmessung

7.41. Válec svěráku / Vice cylinder / Schraubstockzylinder

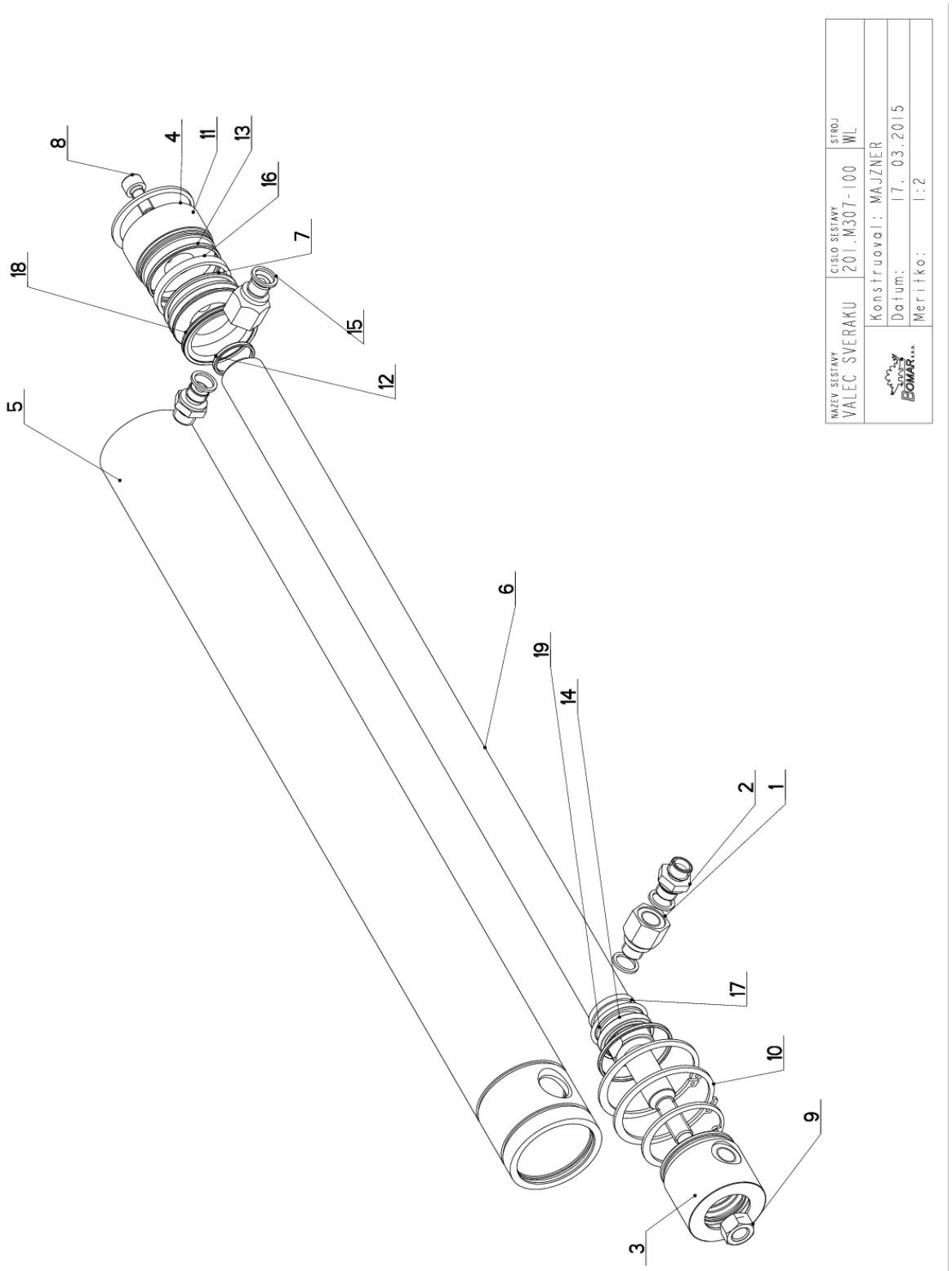

7.42. Kusovník / Piece list / Stückliste - Válec svěráku / Vice cylinder / Schraubstockzylinder

Cislo Sestavy	Ver.	Nazev sestavy
201.M307-100	0	VALEC SVERAKU/VICE CYLINDER/SCHRAUBSTOCKZYLINDER

Poz.	Objednaci cislo	Ver.	Nazev polozky	Rozmer	Ks
1	30.1807-005	3	SROUBENI / BOLTING / VERSCHRAUBUNG	6-HR 22	2
2	30.2807-109	0	SROUBENI PRIME / DIRECT BOLTING / GERADE VERSCHRAUBUNG		2
3	30.C407-012	1	VIKO / COVER / DECKEL	d 55	1
4	30.C407-111	0	VIKO / COVER / DECKEL	d 55	1
5	30.M307-101	0	VALEC SVERAKU / VICE CYLINDER / SCHRAUBSTOCKZYLINDER	TR 62/50	1
6	30.M307-102	0	PISTNICE / PISTON ROD / KOLBENSTANGE	d 28	1
7	30.Y307-035	0	PIST / PISTON / KOLBEN	d 55	1
8	90.001.25.032	0	SROUB IMBUS / ALLEN HEAD BOLT / IMBUSSCHRAUBE	8x20	1
9	90.100.55.007	0	MATICE / NUT / MUTTER	MATICE _ M12	1
10	95.800.021	0	SEGR HRIDEL. / OUTSIDE SAFETY RING / SICHERUNGSRING AUSSEN	POJISTNY KROUZEK 62	2
11	95.801.009	0	SEGR DIRA / INSIDE SAFETY RING / SICHERUNGSRING INNEN	POJISTNY KROUZEK 52	2
12	96.002.011	0	KROUZEK O DYNAMICKY / DYNAMIC O RING / O-RING DYNAMISCH	24X2	1
13	96.002.019	0	KROUZEK O DYNAMICKY / DYNAMIC O RING / O-RING DYNAMISCH	46x2 NBR 70SH	2
14	96.061.009	0	KROUZEK STIRACI / SCRAPER RING / ABSTREIFRING	WD2200280 Z201	1
15	96.082.002	0	TESNENI / SEAL RING / DICHTUNGSRING	13/17x1.5 CU	4
16	96.084.001	0	KROUZEK VODICI / LEAD RING / FÜHRUNGSRING	GP6500500-T47	1
17	96.084.006	0	KROUZEK VODICI / LEAD RING / FÜHRUNGSRING	GR4300280-T47	1
18	96.900.001	0	TESNENI KOMBINOVANE / COMBINATION SEALING / KOMBIDICHTUNG	PW4200500-Z20N	1
19	96.900.021	0	TESNENI KOMBINOVANE / COMBINATION SEALING / KOMBIDICHTUNG	RSK200280-46N	1

Cislo Sestavy/Number of assembly/Nummer der Baugruppe; Verze (Ver.)/Version/Version; Nazev sestavy/Assembly title/Name der Baugruppe; Pozice (Poz.)/Position/Position; Objednaci cislo/Purchase order number/Bestellnummer; Nazev polozky/Volume title/Name der Position; Rozmer/Stock size/Abmessung

7.43. Skluz / Slide / Rutsch

Cislo Sestavy
201.S309-050

Ver.
0

Nazev sestavy
SKLUZ/SLIDE/RUTSCH

Poz.	Objednaci cislo	Ver.	Nazev polozky	Rozmer	Ks
1	30.3509-015	2	KROUZEK DISTANCNI / DISTANCE RING / DISTANZRING	TR 8x1	2
2	30.S309-051	0	ROST / GRILL / GITTER	P 3x240	1
3	30.S309-052	0	SKLUZ / SLIDE / RUTSCH	P 1,5x318	1
4	90.001.25.010	0	SROUB IMBUS / ALLEN HEAD BOLT / IMBUSSCHRAUBE	M5X20	2
5	90.001.25.058	0	SROUB IMBUS / ALLEN HEAD BOLT / IMBUSSCHRAUBE	M12X30	2

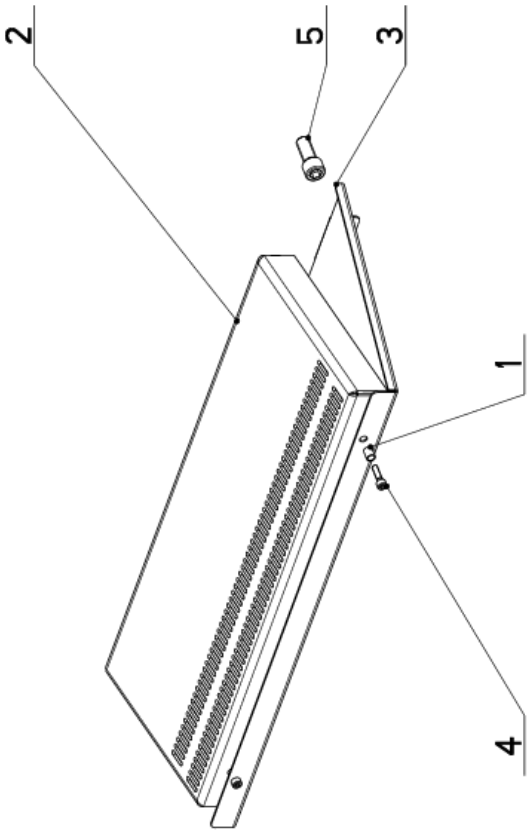

Cislo Sestavy/Number of assembly/Nummer der Baugruppe; Verze (Ver.)/Version/Version; Nazev sestavy/Assembly title/Name der Baugruppe; Pozice (Poz.)/Position/Position;
Objednaci cislo/Purchase order number/Bestellnummer; Nazev polozky/Volume title/Name der Position; Rozmer/Stock size/Abmessung

7.44. Podavač / Feeder / Vorschub

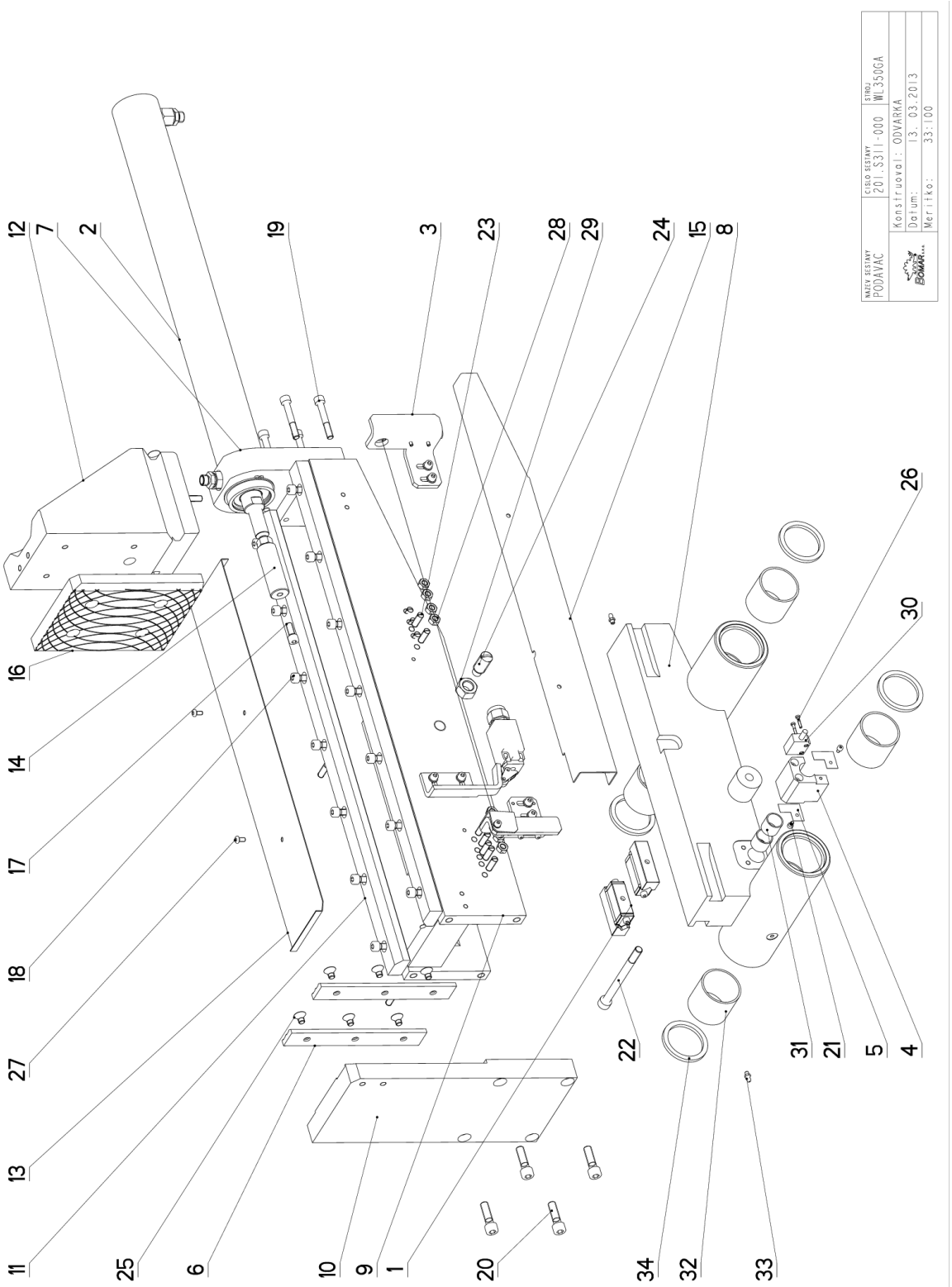

Cislo Sestavy	Ver.	Nazev sestavy
201.S311-000	0	PODAVAC/FEEDER/VORSCHUB

Poz.	Objednaci cislo	Ver.	Nazev polozky	Rozmer	Ks
1	201.9311-200	0	VAL. ELEMENT / /		4
2	201.M307-100	0	VALEC SVERAKU / VICE CYLINDER / SCHRAUBSTOCKZYLINDER		1
3	201.R311-030	1	ZAVORA OPTICKA / OPTICAL GATE / LICHTSCHRANKE		1
4	30.2911-029	0	DRZAK / HOLDER / HALTER	HR 50x50	1
5	30.2911-030	0	STERAC / WIPER / ABSTREIFER	P 0.2-26.5	2
6	30.D311-235	2	LISTA / TRIM / LEISTE	HR 30x10	2
7	30.M203-201	1	DESKA / BOARD / PLATTE	P 35x100	1
8	30.R311-001	2	PODAVAC / FEEDER / VORSCHUB		1
9	30.S311-002	0	PODAVAC / FEEDER / VORSCHUB		1
10	30.S311-003	0	CELIST / BOARD / PLATTE	P30x150	1
11	30.S311-004	0	VEDENI / GUIDE / BACKENFÜHRUNG	HR 40x25	2
12	30.S311-005	0	CELIST POHYBLIVA / /	ODLITEK	1
13	30.S311-006	0	KRYTY / COVERS / ABDECKUNGEN	P 1x110	1
14	30.S311-007	0	DISTANC / DISTANCE / DISTANZ	D 25	1
15	30.S311-008	0	KRYT / COVER / ABDECKUNG	P 1,5x109	1
16	30.S311-009	0	DESKA / BOARD / PLATTE	HR 150x20	1
17	90.001.25.032	0	SROUB IMBUS / ALLEN HEAD BOLT / IMBUSSCHRAUBE	8x20	1
18	90.001.25.033	0	SROUB IMBUS / ALLEN HEAD BOLT / IMBUSSCHRAUBE	8x25	15
19	90.001.25.039	0	SROUB IMBUS / ALLEN HEAD BOLT / IMBUSSCHRAUBE	M8X55	4
20	90.001.25.049	0	SROUB IMBUS / ALLEN HEAD BOLT / IMBUSSCHRAUBE	M10X35	4
21	90.001.55.086	0	SROUB IMBUS ZN / ALLEN HEAD BOLT / IMBUSSCHRAUBE	M4X6	2
22	90.001.25.XXX	0	SROUB IMBUS / ALLEN HEAD BOLT / IMBUSSCHRAUBE	M10X120	1
23	90.002.2D.013	0	SROUB STAVECI / ADJUSTMENT BOLT / STELLSCHRAUBE	SROUB M8X25	12
24	90.004.2D.019	0	SROUB STAVECI / ADJUSTMENT BOLT / STELLSCHRAUBE	SROUB M16X40	1
25	90.011.27.007	0	SROUB / BOLT / SCHRAUBE	M8x12	6
26	90.012.50.001	0	SROUB VALCOVY / ROLLER BOLT / ZYLINDERSCHRAUBE	SROUB M3X16	2
27	90.013.27.003	0	SROUB / BOLT / SCHRAUBE	M5X10	2
28	90.100.55.005	0	MATICE / NUT / MUTTER	MATICE _ M8	8
29	90.100.55.008	0	MATICE / NUT / MUTTER	MATICE _ M16	1
30	91.270.006	0	SNIMAC MAGNET. / MAGNETIC SENSOR / MAGNETSENSOR		1
31	95.700.004	0	POUZDRO / SLEEVE / BÜCHSE	20X20	2
32	95.700.026	0	POUZDRO / SLEEVE / BÜCHSE	50X50	4
33	95.860.001	0	HLAVICE MAZACI / HEAD / KOPF	KM5	2
34	96.040.004	0	KROUZEK STIRACI / SCRAPER RING / ABSTREIFRING	50x62x5	4

7.46. Element válečkový / Roller element / Rollenelement

Cislo Sestavy
201.9311-200

Ver.
0

Nazev sestavy
ELEMENT VALECKOVY/ROLLER ELEMENT/ROLLENELEMENT

Poz.	Objednaci cislo	Ver.	Nazev polozky	Rozmer	Ks
1	30.2911-206	0	PRILOZKA / STRAP / LASCHE	P 2x20	2
2	30.4311-203	0	VALECEK / CYLINDER / ROLLE	d 10	4
3	30.9311-201	0	LISTA / /	HR 20x20	1
4	30.9311-202	0	LISTA / /	HR 20x20	1
5	31.2911-204	0	STERAC / WIPER / ABSTREIFER	PLAST. VYLISEK	2
6	31.9311-205	0	PRACHOVKA / DUST COVER / STAUBSCHUTZ	VYLISEK PLAST	2
7	90.001.25.008	0	SROUB IMBUS / ALLEN HEAD BOLT / IMBUSSCHRAUBE	M5X12	2

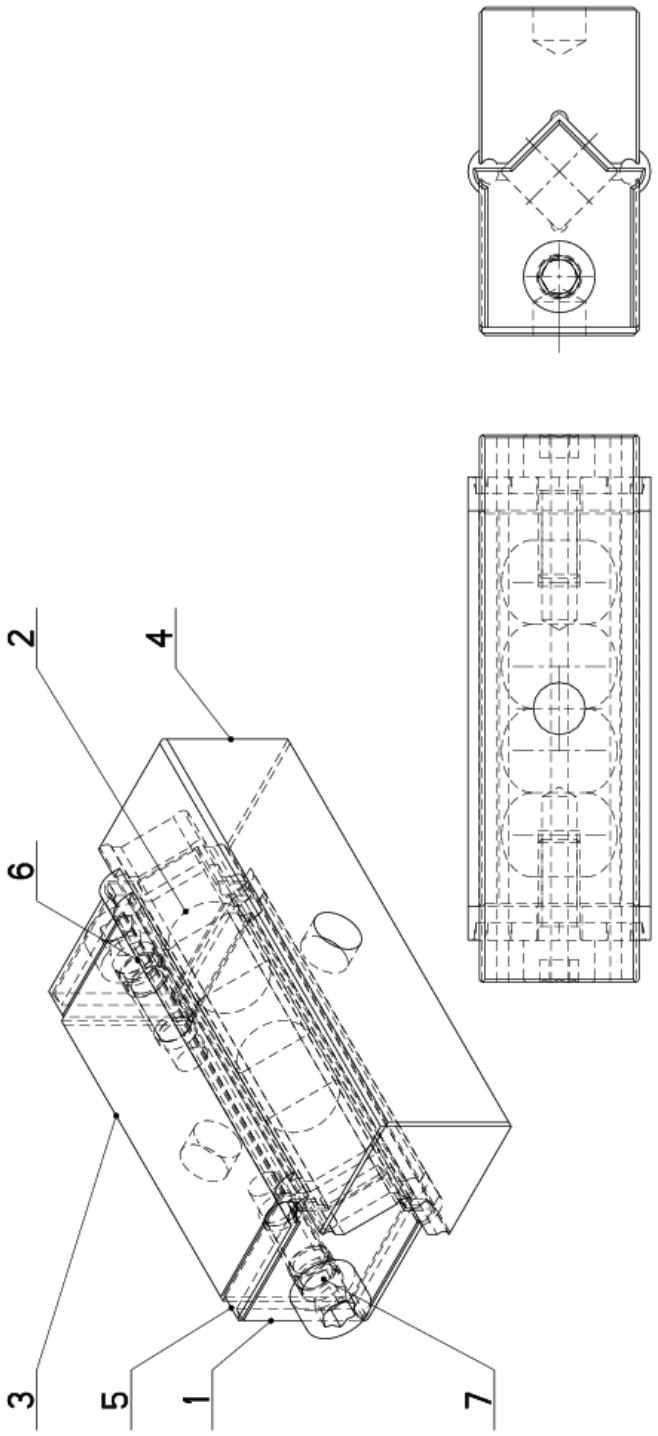

Cislo Sestavy/Number of assembly/Nummer der Baugruppe; Verze (Ver.)/Version/Version; Nazev sestavy/Assembly title/Name der Baugruppe; Pozice (Poz.)/Position/Position;
Objednaci cislo/Purchase order number/Bestellnummer; Nazev polozky/Volume title/Name der Position; Rozmer/Stock size/Abmessung

7.47. Válec svěráku / Vice cylinder / Schraubstockzylinder

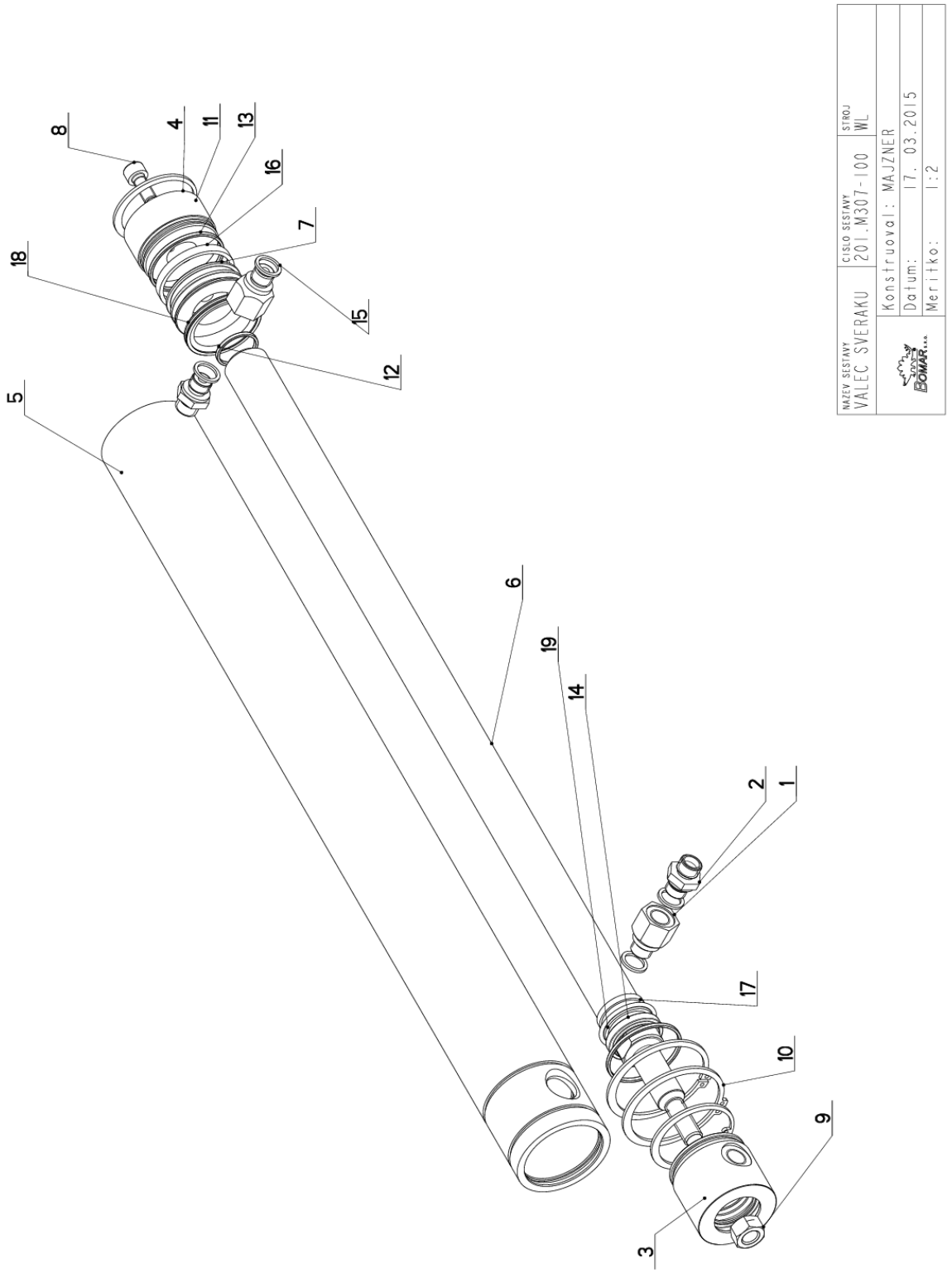

Cislo Sestavy	Ver.	Nazev sestavy
201.M307-100	0	VALEC SVERAKU/VICE CYLINDER/SCHRAUBSTOCKZYLINDER

Poz.	Objednaci cislo	Ver.	Nazev polozky	Rozmer	Ks
1	30.1807-005	3	SROUBENI / BOLTING / VERSCHRAUBUNG	6-HR 22	2
2	30.2807-109	0	SROUBENI PRIME / DIRECT BOLTING / GERADE VERSCHRAUBUNG		2
3	30.C407-012	1	VIKO / COVER / DECKEL	d 55	1
4	30.C407-111	0	VIKO / COVER / DECKEL	d 55	1
5	30.M307-101	0	VALEC SVERAKU / VICE CYLINDER / SCHRAUBSTOCKZYLINDER	TR 62/50	1
6	30.M307-102	0	PISTNICE / PISTON ROD / KOLBENSTANGE	d 28	1
7	30.Y307-035	0	PIST / PISTON / KOLBEN	d 55	1
8	90.001.25.032	0	SROUB IMBUS / ALLEN HEAD BOLT / IMBUSSCHRAUBE	8x20	1
9	90.100.55.007	0	MATICE / NUT / MUTTER	MATICE _ M12	1
10	95.800.021	0	SEGR HRIDEL. / OUTSIDE SAFETY RING / SICHERUNGSRING AUSSEN	POJISTNY KROUZEK 62	2
11	95.801.009	0	SEGR DIRA / INSIDE SAFETY RING / SICHERUNGSRING INNEN	POJISTNY KROUZEK 52	2
12	96.002.011	0	KROUZEK O DYNAMICKY / DYNAMIC O RING / O-RING DYNAMISCH	24X2	1
13	96.002.019	0	KROUZEK O DYNAMICKY / DYNAMIC O RING / O-RING DYNAMISCH	46x2 NBR 70SH	2
14	96.061.009	0	KROUZEK STIRACI / SCRAPER RING / ABSTREIFRING	WD2200280 Z201	1
15	96.082.002	0	TESNENI / SEAL RING / DICHTUNGSRING	13/17x1.5 CU	4
16	96.084.001	0	KROUZEK VODICI / LEAD RING / FÜHRUNGSRING	GP6500500-T47	1
17	96.084.006	0	KROUZEK VODICI / LEAD RING / FÜHRUNGSRING	GR4300280-T47	1
18	96.900.001	0	TESNENI KOMBINOVANE / COMBINATION SEALING / KOMBIDICHTUNG	PW4200500-Z20N	1
19	96.900.021	0	TESNENI KOMBINOVANE / COMBINATION SEALING / KOMBIDICHTUNG	RSK200280-46N	1

Cislo Sestavy/Number of assembly/Nummer der Baugruppe; Verze (Ver.)/Version/Version; Nazev sestavy/Assembly title/Name der Baugruppe; Pozice (Poz.)/Position/Position;
Objednaci cislo/Purchase order number/Bestellnummer; Nazev polozky/Volume title/Name der Position; Rozmer/Stock size/Abmessung

7.49. Závora optická / Optical gate / Lichtschranke

Cislo Sestavy 201.R311-030

Ver. 1

Nazev sestavy ZAVORA OPTICKA/OPTICAL GATE/LICHTSCHRANKE

Poz.	Objednaci cislo	Ver.	Nazev polozky	Rozmer	Ks
1	30.R311-031	2	DRZAK / HOLDER / HALTER	P 6x100	1
2	30.R311-032	1	DRZAK / HOLDER / HALTER	P 6x100	1
3	30.R311-033	0	DORAZ / HOLDER / HALTER	P 6x56	1
4	30.R311-034 (1)	0	KRYT / HOLDER / HALTER	P 2x35	1
5	90.001.25.005	0	SROUB IMBUS / ALLEN HEAD BOLT / IMBUSSCHRAUBE	M4X25	4
6	90.001.25.009 (1)	0	SROUB IMBUS / ALLEN HEAD BOLT / IMBUSSCHRAUBE	M5X16	1
7	90.001.25.017	0	SROUB IMBUS / ALLEN HEAD BOLT / IMBUSSCHRAUBE	M6X16	6
8	90.100.55.003 (1)	0	MATICE / NUT / MUTTER	MATICE - M5	1
9	90.150.50.003 (1)	0	PODLOZKA / WASHER / UNTERLEGSCHEIBE	PODLOZKA 5,3	2
10	90.150.50.004	0	PODLOZKA / WASHER / UNTERLEGSCHEIBE	PODLOZKA 6,4	6
11	91.173.010	0	SPINAC KONC.S KLADK. / END SWITCH WITH PULLEY / ENDSCHALTER MIT ROLLE	PZ-FR605-M2	1
12	91.400.003	0	LASER-UKAZOVATKO / LASER / LASER	BALLUFF	1
13	91.400.004	0	LASER-UKAZOVATKO / LASER / LASER	BALLUFF	1

1.PRIDANO - KRYTKA 30.R311-034,1xSROUB M5x16(90.001.25.009),1xMATICE M5(90.100.55.003),2xPODLOZKA 5.3(90.150.003).
293/ZM267 6.11.2013 SLEZACKOVA

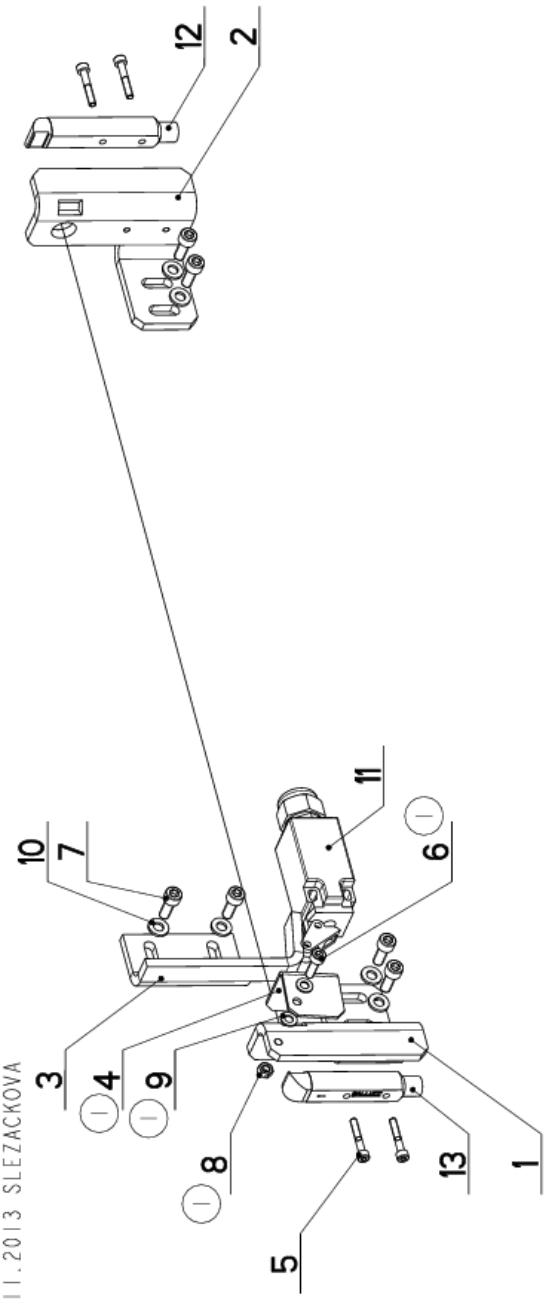

Cislo Sestavy/Number of assembly/Nummer der Baugruppe; Verze (Ver.)/Version/Version; Nazev sestavy/Assembly title/Name der Baugruppe; Pozice (Poz.)/Position/Position;
Objednaci cislo/Purchase order number/Bestellnummer; Nazev polozky/Volume title/Name der Position; Rozmer/Stock size/Abmessung

7.50. Plot / Fence / Zaun

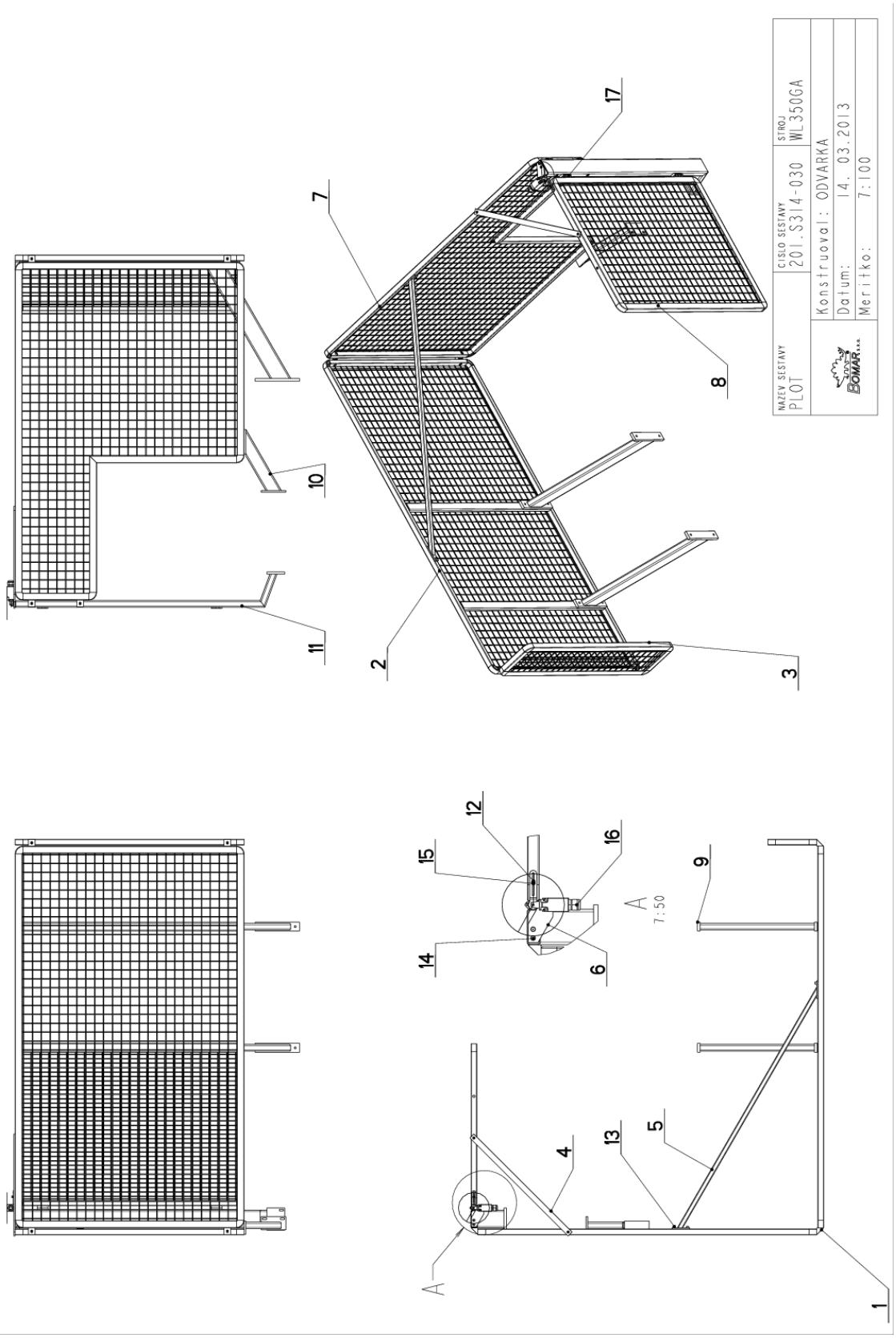

Cislo Sestavy	Ver.	Nazev sestavy
201.S314-030	0	PLOT/FENCE/ZAUN

Poz.	Objednaci cislo	Ver.	Nazev polozky	Rozmer	Ks
1	30.R214-024	0	DRZAK / HOLDER / HALTER	TYC 30x20	6
2	30.S214-031	0	PLOT / FENCE / ZAUN		1
3	30.S214-034	0	PLOT / FENCE / ZAUN		1
4	30.S214-038	0	TAHLO / GUY ROD / ZUGSTANGE		1
5	30.S214-045	0	DRZAK / HOLDER / HALTER		1
6	30.S214-046	0	DRZAK / HOLDER / HALTER	HR 40x5	1
7	30.S314-032	0	PLOT / FENCE / ZAUN		1
8	30.S314-035	0	PLOT / FENCE / ZAUN		1
9	30.S314-036	0	DRZAK / HOLDER / HALTER		2
10	30.S314-037	0	DRZAK / HOLDER / HALTER		1
11	30.S314-047	0	KONZOLA / CONSOLE / KONSOLE		1
12	90.001.25.010	0	SROUB IMBUS / ALLEN HEAD BOLT / IMBUSSCHRAUBE	M5X20	1
13	90.001.25.018	0	SROUB IMBUS / ALLEN HEAD BOLT / IMBUSSCHRAUBE	M6X20	3
14	90.011.27.024	0	ZAPUSTNY IMBUS / COUNTERSINK BOLT / SENKSCHRAUBE	SROUB M5X20	2
15	90.100.55.003	0	MATICE / NUT / MUTTER	MATICE _ M5	1
16	91.173.013	0	SPINAC KONC.S KLADK. / END SWITCH WITH PULLEY / ENDSCHALTER MIT ROLLE		1
17	99.100.007	0	PANT / HINGE / TÜRBAND		2

Cislo Sestavy/Number of assembly/Nummer der Baugruppe; Verze (Ver.)/Version/Version; Nazev sestavy/Assembly title/Name der Baugruppe; Pozice (Poz.)/Position/Position; Objednaci cislo/Purchase order number/Bestellnummer; Nazev polozky/Volume title/Name der Position; Rozmer/Stock size/Abmessung

7.52. Válec pomocný / Auxiliary cylinder / Hilfszylinder

Cislo Sestavy
201.S314-250

Ver.
0

Nazev sestavy
VALEC POMOCNY/AUXILIARY CYLINDER/HILFSZYLINDER

Poz.	Objednaci cislo	Ver.	Nazev polozky	Rozmer	Ks
1	201.S314-260	0	VALECEK / CYLINDER / ROLLE		1
2	30.1517-841	0	MATICE / NUT / MUTTER	P8x19	2
3	30.S314-251	0	RAM / FRAME / RAHMEN		1
4	90.002.20.031	0	SROUB STAVECI / ADJUSTMENT BOLT / STELLSCHRAUBE	SROUB M10X40	2
5	94.006.002	0	SROUB / BOLT / SCHRAUBE	M8x25	1

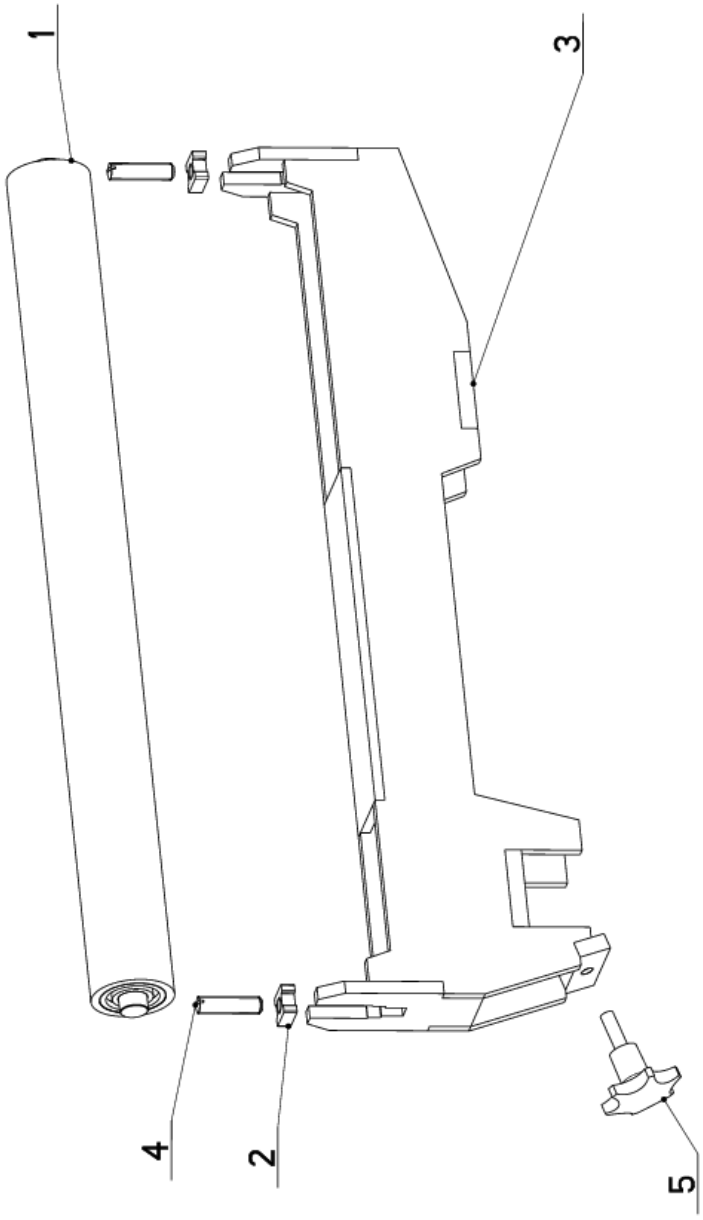

Cislo Sestavy/Number of assembly/Nummer der Baugruppe; Verze (Ver.)/Version/Version; Nazev sestavy/Assembly title/Name der Baugruppe; Pozice (Poz.)/Position/Position;
Objednaci cislo/Purchase order number/Bestellnummer; Nazev polozky/Volume title/Name der Position; Rozmer/Stock size/Abmessung

7.53. Váleček / Cylinder / Rolle

Cislo Sestavy	Ver.	Nazev sestavy
201.S314-260	0	VALECEK/CYLINDER/ROLLE

Poz.	Objednaci cislo	Ver.	Nazev polozky	Rozmer	Ks
1	30.S314-261	0	VALECEK / CYLINDER / ROLLE	TR 51x6.3	1
2	30.S314-262	0	OSA / AXLE / ACHSE	d17	1
3	95.001.016	0	LOZISKO / BEARING / LAGER	6203 2RS	2

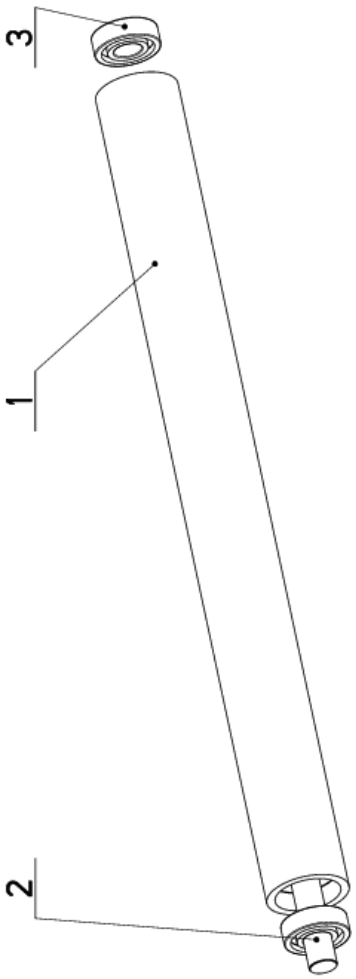

Cislo Sestavy/Number of assembly/Nummer der Baugruppe; Verze (Ver.)/Version/Version; Nazev sestavy/Assembly title/Name der Baugruppe; Pozice (Poz.)/Position/Position;
Objednaci cislo/Purchase order number/Bestellnummer; Nazev polozky/Volume title/Name der Position; Rozmer/Stock size/Abmessung