BOMAR®

Operating Instructions for Band Saw

individual 610.440 GANC

Before transporting and using the machine, please read the instructions thoroughly!

Serial number:

Service and Information

In case of technical difficulties or spare parts order, please contact your dealer:

Or contact Bomar, spol. s r.o. directly:

BOMAR, spol. s r.o.
Těžební 1236/1
62700 Brno
CZECH REPUBLIC

Telefon: +420 – 533 426 100
Fax: +420 – 533 426 109

e-mail: info@bomar.cz
WWW: http://www.bomar.cz

We are available Mondays to Fridays from 7^{00} to 16^{00}.

Version 1.02 / July 2007
BOMAR, spol. s r.o. © - Subject to modifications and amendments.

Content

1. INTRODUCTION 7
2. BAND SAW USING 7
3. TECHNICAL DATA 8
4. SAFETY NOTES 9
   4.1. General 9
   4.2. Protective suit and personal safety 9
   4.3. Safety notes for machine operator 10
   4.4. Safety notes for the servicing and repairs 12
   4.5. Safety machine accessories 12
5. TRANSPORTATION AND STOCKING 14
   5.1. Conditions for transportation and stocking 14
   5.2. Safety notes 14
   5.3. Transport and stocking preparations 15
   5.4. Transport and stocking 15
6. ACTIVATION 16
   6.1. Machine working conditions 16
   6.2. Band saw unpacking and assembling 16
   6.3. Machine installing and levelling 17
   6.4. Electrical connection 18
   6.5. Filling of the cooling system 19
   6.6. Check machine functions 20
7. CONTROL PANEL – DESCRIPTION 21
8. STARTING THE BAND SAW 24
   8.1. Switch on the band saw 24
   8.2. Feeder reference position 24
9. MATERIAL INSERTION 25
   9.1. Safety notes 25
   9.2. Handling agent selection 25
   9.3. Material insertion 25
   9.4. Bundle material cutting 26
10. BAND SAW ADJUSTING 27
   10.1. Safety notes 27
   10.2. Angular cut setting 27
   10.3. Cutting speed adjustment 28
   10.4. Optimal adjusting of the guide cubes span 29
   10.5. Swarf conveyor operation 29
   10.6. Pressure adjusting to the cut 30
11. SEMI-AUTOMATIC CYCLE 31
   11.1. Safety notes 31
   11.2. Semi-automatic mode 31

11.3. CYCLE BREAKING 32
11.4. SPEED ADJUSTING OF THE ARM LOWERING 32

12. AUTOMATIC MODE 33

12.1. SAFETY NOTES 33
12.2. CYCLE PRESET 33
12.2.1. Preset 33
12.2.2. Program storing 34
12.2.3. Program selection 34
12.2.4. Editing 35
12.2.5. New Preselection inserting 35
12.2.6. Clearing memory 36
12.3. AUTOMATIC CYCLE WITH MATERIAL CUTTING 38
12.4. AUTOMATIC CYCLE WITHOUT MATERIAL CUTTING 38
12.5. CYCLE BREAKING 39
12.6. SETTING THE SPEED OF THE SAW ARM LOWERING 39

13. BLANKS REMOVING FROM THE BAND SAW 40

13.1. SAFETY NOTES 40
13.2. HANDLING AGENT SELECTION 40
13.3. BLANKS REMOVING 40

14. SERVICE MENU 41

14.1. ENTRANCE TO SERVICE MENU 41
14.2. VICE PARAMETERS 41
14.3. COOLING PARAMETERS 41
14.3.1. Cooling type 41
14.3.2. Cooling mode 42
14.4. CUTTING PARAMETERS 42
14.5. SWARF CONVEYOR OPERATION 43
14.6. MACHINE PARAMETERS 43
14.7. LANGUAGE 44
14.8. LENGTH UNITS SELECTION 44
14.9. REGULATOR 44
14.10. LENGTH CORRECT 44
14.11. SERVICE MENU CLOSING 45

15. SELECTION AND REPLACEMENT OF THE SAW BAND 46

15.1. SAFETY NOTES 46
15.2. SAW BAND SIZES 46
15.3. SELECTION OF THE SAW BAND TOOTH SYSTEM: 46
15.4. SAW BAND RUNNING - IN 48
15.5. SAW BAND DISMANTLING 49
15.6. SAW BAND INSTALLATION 50
15.7. SAW BAND STRETCHING AND INSPECTION 51
15.7.1. Saw band stretching 51
15.7.2. Saw band inspection 51

16. COOLING AGENTS AND CHIPS DISPOSAL 53

16.1. SAFETY NOTES 53
16.2. COOLING LIQUID PREPARATION 53
16.3. COOLANT DEVICE INSPECTION 55
16.4. CHIPS DISPOSAL 55

17. GREASES AND OILS 56

17.1. GEARBOX OILS 56
17.2. HYDRAULIC OILS 57
17.3. LUBRICANT GREASES 58

18. SERVICE 59

18.1. MACHINE CLEANING 59
18.2. LUBRICATION 59
18.3. COOLING LIQUID INSPECTION 59
18.4. HYDRAULIC OIL LEVEL CHECK 60

19. ADJUSTMENT 61

19.1. GUIDING CUBES ADJUSTMENT 61
19.2. HARD METAL GUIDES ADJUSTMENT 61
19.3. SAW BAND RUN ADJUSTMENT ON STRETCHING WHEEL 62
19.4. BRUSH ADJUSTMENT 62
19.5. LIMIT SWITCH SETTING OF THE SAW BAND STRETCHING 63
19.6. LIMIT SWITCH OF THE SAW FRAME LOWER POSITION ADJUSTMENT 64
19.7. ADJUSTMENT OF THE CUTTING PRESSURE REGULATION 65
19.8. PRESSURE SWITCH ADJUSTMENT 66
19.9. PRESSURE ADJUSTMENT OF THE HYDRAULIC SYSTEM 67

20. WORN PIECES REPLACEMENT 68

20.1. PUSHING BEARING REPLACEMENT 68
20.2. SAW BAND GUIDING PULLEYS REPLACEMENT 70
20.3. HARD METAL GUIDES REPLACEMENT 72
20.4. ROUND BRUSH REPLACEMENT 73

21. ROZMĚROVÉ SCHÉMA / AUFSTELLZEICHNUNG / INSTALLATION DIAGRAM 74

22. ELEKTRICKÁ SCHÉMATA / ELEKTROSCHEMAS / WIRING DIAGRAMS 74

23. KUSOVNÍK ELEKTROSOUČÁSTÍ / STÜCKLISTE DER ELEKTROTEILEN / PIECE LIST OF ELEKTROPARTS 89

24. HYDRAULICKÉ SCHÉMA / HYDRAULIKSCHEMA / HYDRAULIC DIAGRAM 90

25. VÝKRESY SESTAV PRO OBJEDNÁNÍ NÁHRADNÍCH DÍLŮ / ZEICHNUNGEN FÜR BESTELLUNG DER ERSATZTEILE / DRAWING ASSEMBLIES FOR SPARE PARTS ORDER 94

25.1. HLAVNÍ SVĚRÁK / HAUPTSCHRAUBSTOCK / MAIN VICE 95
25.2. UPÍNACÍ VÁLEC SVĚRÁKU / SPANNZYLINDER DES SCHRAUBSTOCKES / VICE CLAMPING CYLINDER 99
25.3. PODÁVACÍ SVĚRÁK / VORSCHUBSCHRAUBSTOCK / FEEDING VICE 101
25.4. VÁLEC PODÁVÁNÍ / VORSCHUBZYLINDER / FEEDING CYLINER 105
25.5. OTOČNÁ KONZOLA / DREHKONSOLE / TURNING CONSOLE 107
25.6. PILOVÉ RAMENO / SÄGERAHMEN / SAW ARM 109
25.7. NAPÍNÁNÍ PILOVÉHO PÁSU / SÄGEBANDSPANNUNG / SAW BAND STRETCHING 111
25.8. POHON PILOVÉHO PÁSU / SÄGEBANDANTRIEB / SAW BAND DRIVING 113
25.9. VEDENÍ PILOVÉHO PÁSU / SÄGEBANDFÜHRUNG / SAW BAND GUIDING 115
25.10. PRAVÁ VODÍCÍ KOSTKA / RECHTER FÜHRUNGSKLOTZ / RIGHT GUIDING CUBE 117
25.11. LEVÁ VODÍCÍ KOSTKA / LINKER FÜHRUNGSKLOTZ / LEFT GUIDING CUBE 119
25.12. KARTÁČEK / SPÄNBÜRSTE / BRUSH 121
25.13. ŘEMENICE KARTÁČKU / BÜRSTENRIEMENSCHEIBE / BRUSH PULLEY 123
25.14. ZVEDACÍ VÁLEC / HUBZYLINDER / LIFTING CYLINDER 125

26. TROUBLESHOOTING TABLE 127
26.1. MECHANICAL PROBLEMS 127
26.2. ELECTRIC AND HYDRAULIC PROBLEMS 129
27. ROLLER CONVEYORS AND ACCESSORIES 131
27.1. ROLLER CONVEYORS 131
27.2. ROLLER CONVEYORS PREPARED FOR POWERING 131
27.3. POWER AND CONTROL UNITS FOR POWERED CONVEYORS 132
27.4. LENGTH STOPS 133
27.5. CONNECTION PARTS 134
27.6. CONNECTION SETS 134
27.7. ACCESSORIES OF ROLLER CONVEYORS 134
27.8. COVERS 135
27.9. CONNECTION SCHEMA OF THE ROLLER CONVEYORS TO THE BAND SAW 136
DECLARATION OF CONFORMITY 139

1. Introduction

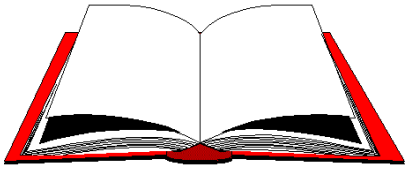

The operating instructions must be read by the person, who keeps in touch with the machine before transportation, installation, using, servicing, reparation, stocking or removal!

The operating instructions include relevant information. The operator must familiarise himself with the install and operation, safety notes and machine servicing, because reliability and service life must be reached. The operating instructions must avoid risks, which are linked to work on the machine. Before transporting and using of the machine, please read the instructions thoroughly!

The operating instructions must be available at the machine! Keep the operating instructions in good condition!

Attention! The exclamation mark in the yellow triangle signifies a safety warning. The meaning is described next to the symbol.

2. Band saw using

The band saw individual 610.440 GANC is used for cutting and shortening of rolled bars and drawn bars and profiles from steels, stainless steels, non-ferrous metals and plastics. **Combustible materials are excepted for cutting!** Any other usage and operation outside this range are unauthorised and the manufacturer/supplier does not accept any responsibility for any damages resulting from such misuse. **The operator has full responsibility!**

The roller conveyors can be connected with the band saw, which facilitates manipulation with the material. Recommended types and style of connecting are described in chapter „**Roller conveyors and accessories**“.

3. Technical data

Machine weight:

Weight	2300 kg

Machine size:

Length	3200 mm
Width	2950 mm
Height	2200 mm

Electrical equipment of the machine:

Supply voltage	~3 x 400V, 50Hz, TN-C-S
Total input	8 kVA
Max. fuse	16 A
Protection degree	IP 54

Driving engine of the band saw:

Type	1LA7113-4AA60
Output	4 kW

Hydraulic equipment:

Type	870-1554
Output	1,1 kW

Cooling pump:

Type	2COP1– 14HP1
Capacity	70 dm^3

Size of the saw band:

6400 x 41 x 1,30 mm

Cutting speed:

20 - 90 m/min

Cutting angles:

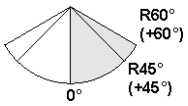			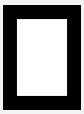	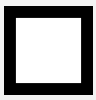
0°	∅440 mm	635 x 440 mm	635 x 440 mm	440 x 440 mm
R 45° (+45°)	∅440 mm	525 x 250 mm	410 x 440 mm	410 x 410 mm
R 60° (+60°)	∅330 mm	350 x 250 mm	230 x 440 mm	230 x 230 mm

Attention! In automatic mode can you cut max 45 °by turning of the arm!

4. Safety notes

4.1. General

The machine is equipped with safety and protective guarding for operator and machine protection. Nevertheless, this safety and protective guarding cannot prevent injury. Service personnel must read this chapter and comprehend it, before he starts to work on the machine. **Always keep instructions about work safety!** Service personnel must take into account other aspects of the risk, which refer to the ambient conditions and the material.

Consider the safety signs on the machine. Do not remove or damage them!

4.2. Protective suit and personal safety

Wear tight fitting overalls!
Loose fitting clothes may be caught with machine parts and cause serious injury.

Wear protective gloves!
Material cuts and saw band have sharp edges and may cause serious injuries.

Attention! Gloves you can use only at working material replacement (saw band)! The machine and accessories must be inactive!

If the machine is running, you must not wear gloves! It is dangerous, because some parts of the machine can catch gloves!

Wear protective shoes with non-skid soles!
The unsuitable shoes may cause balance loss and following injury. Falling work pieces may cause serious injuries too.

Wear protective goggles!
Chips and cooling liquid may damage your eyes.

Always wear ear protections!
Most of the machines emit up to 80 dB and may damage your hearing.

Do not wear jewellery and always tie back long hair!
Moving machine parts can catch jewellery or loose hair and may cause serious injuries.

Operate the machine only when you are fit enough to work.
Illnesses or injuries diminish concentration.
Avoid machine work, which may compromise the safety of you and your colleagues!

4.3. Safety notes for machine operator

Keep instructions and orders about work safety!

Read the operating instructions, before you start to work on the machine! Keep the operating instructions in good condition!

Close covers before the machine starting and check, if the covers are not damaged. Damaged covers must be repaired or changed. Do not start the machine, if the cover is removed! Check, if the electric cables are not damaged.

Attention! Do not connect the machine to electricity if the covers are removed. Do not touch the electrical equipment.

Do not hold the material for clamping to the vice and for cutting!

Do not operate with the buttons and the switches on the control panel, if you have gloves!
For machine starting take care, that there is nobody in the working area of the machine (it means in the working area of the vice, the saw band, the saw arm etc.).
In no circumstances touch the rotating elements.
Work on the machine only when the machine is in good condition!
Check at least once in a shift, if the machine is not damaged. If the machine is damaged, you must bring the machine in order and you must inform your superior!

Keep your working area clean!
Ensure sufficient lighting in the working area.
Take off the spilt water or the oil from the floor and dry it!

Do not touch the cooling liquid with bare hands!
Do not set the nozzle of the cooling liquid, when the machine is started on!
Do not remove the chips from the working area of the machine, when the machine is started on!
Do not use the compressed air for the machine cleaning or for the chips removing!
Use the protective instruments for chips removal!

4.4. Safety notes for the servicing and repairs

Only a qualified professional can carry out servicing and repairs! Always keep notes about work safety!

ATTENTION! Only a qualified professional can carry out the servicing and repairs of the electric equipment! Take special care during the work with electrical equipment. High voltage shock can have fatal consequences! Always keep notes about work safety! Otherwise, there is possibility of heavy injury.

Switch off the main switch and lock it, before you start service work! Otherwise, there is possibility of hazardous machine starting.

Only qualified person can do the servicing and repairs. For parts changing, use only parts, which are identical with the originals. Otherwise, there is possibility of health hazard. Use only recommended type of the hydraulic oils and oils and lubricants.

Do not remove or do not lock the limit switches or safety equipments!
Any use of the saw, accessories or machine parts other than that intended by the BOMAR, spol. s r.o. company is not permitted. The guarantee on this product will be afterward lost and BOMAR, spol. s r.o. takes no responsibility for caused damages!

Do not start the machine, if the covers are not on their places!

4.5. Safety machine accessories

The machine is equipped with safety accessories. It protects the operator from injuries and the machine before damage. The safety accessories are blocking accessories, emergency switches and covers. Check once in a week the function of the safety accessories. If the safety accessories are functionless, you must stop work and repair or change the safety accessories.

Enhanced risk!
Do not come into or intervene in the cutting area. Otherwise, there is possibility of heavy injury.

TOTAL STOP button

TOTAL STOP button is used for emergency switching – off the machine in case defect or health hazard. By pressing TOTAL STOP button is interrupted the supply of the electrical power.

If any damages or fault appears, immediately press TOTAL STOP button!

Release the pressing button is possible by twisting of the upper part of the button.

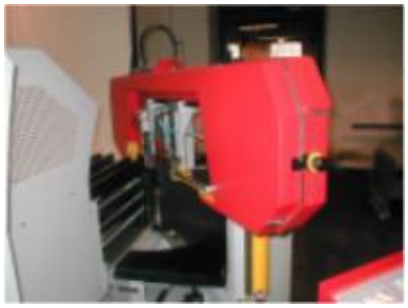

Saw arm cover

If the cover is opened during operation, the limit switch is opened and the band saw is stopped. The band saw is not possible to start in set mode.

The band saw is stated to the operation, when the cover is closed!

Saw band stretching and rupture inspection

This device checks the saw band tension and causes immediate machine stop if the band incidentally ruptures

The device includes a limit switch. Its adjustment is described in chapter „Servicing and adjusting“. Check the switch carefully and periodically – adjust it if necessary.

Saw band cover

This protective cover envelops the saw band in the area from guiding cube to the arm.

Never switch the saw band on if this cover is not mounted!

5. Transportation and stocking

5.1. Conditions for transportation and stocking

Keep recommendations for the manufacturers for transportation and stocking! If the recommendations are not kept, damage can occur to the machine.

Conditions for transportation and stocking:
Temperature of the air from –25°C to +55°C, for a short term (max. 24 hours) temperature of the air until +70°C.
Do not expose the machine to radiation (for example microwave radiation, ultra-violet radiation, laser radiation, X – ray radiation). Radiation can cause problems with the machine function and deteriorating condition of the isolation.
Take measures, to prevent damage by dampness, by vibrations and by shakes.

5.2. Safety notes

Keep safety notes for the transport!

Always wear protective hardhat to avoid hard injuries during loading and transportation!

Wear protective gloves!
Sharp edges of the machine, pallets and means of transport can injure your hands.

Wear safety boots!
Loose parts and packing materials can cause serious injuries.

Do not use a forklift truck for handling the machine, if you do not have licence for it!
Do not move under suspended loads! Fault in lifting device may cause serious injury.
Keep a safe distance from the machine during the transport.

5.3. Transport and stocking preparations

Close the vice and thoroughly oil all blank surfaces.
Lower the saw frame to the lowest position.
Make sure to empty the machine of all traces of the cooling agent.
Fasten all loose parts securely to the machine.
Pack and wrap the control desk securely to avoid damage during transport.
Fix the stickers stating the minimum approximate machine weight to at least five well visible places.
The machine has to be screwed to a pallet for the transport!

5.4. Transport and stocking

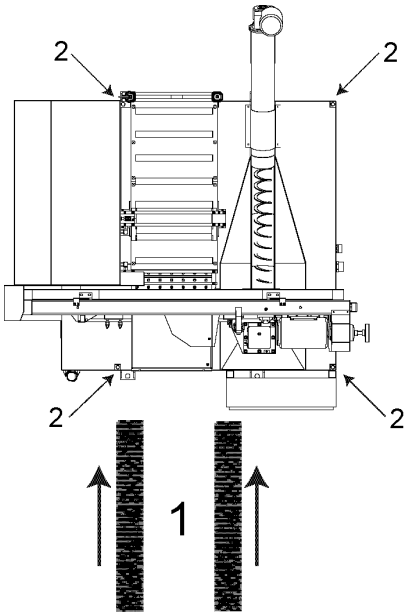

Handle the machine only with the hand pallet truck or the forklift truck! Use the lifters of the truck according to the schema (num. 1). If the hand pallet truck or the forklift truck is not available it is possible to use suspension cables and the crane. The machine is equipped with screw threads M20 for fixing the shackles (num. 2). Use only shackles with appropriate capacity.
Make sure that the hand pallet truck; the forklift truck or the crane and the suspension cables had sufficient capacity.
Make sure that the van or the trailer had sufficient capacity.
The machine must be secured during transportation.
Screw on the palette to the floor of the van or the trailer.
Be careful that the machine is not damaged during transportation.

It is forbidden to handle the machine any other way (for example by, lifting by the saw frame of the band saw), than it is written in this operating instructions, the machine can be damaged!

Store the machine only on terms, which are stated in the operating instructions. Otherwise, the machine can be damaged.

6. Activation

6.1. Machine working conditions

Keep the conditions of the manufacturer for machine operating! If recommendations are not kept, damage can occur to the machine.

The manufacturer warrants the correct function of the machine for these conditions:
At temperature air from +5°C to +40°C, the temperature average during 24 hours must not exceed over +35°C.
At relative dampness of the air in the extend from 30% to 95% (not concentrate).
Altitude higher than 1000 metres.
Do not expose the machine to the radiation (for example microwave radiation, ultra-violet radiation, laser radiation, X – ray radiation). Radiation can cause problems with the machine function and deteriorating condition of the isolation.

6.2. Band saw unpacking and assembling

1) Remove the packing from the machine and unpack all parts.

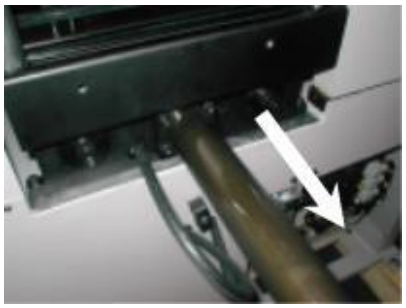

2) Pull the feeding cylinder up.

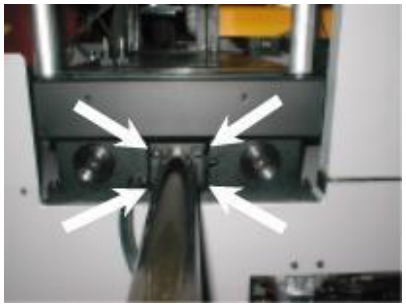

3) Screw on the feeding cylinder by means of screws (they are added to the band saw).

6.3. Machine installing and levelling

Check the floor supporting capacity before machine installing. If the floor capacity does not agree with requirements, you must prepare the necessary base for the machine.

Minimal requirement:

machine weight (chapter **Technical data**)
+ weight of accessories
+ maximum weight of material

The machine must be levelled at the horizontal position. All feet of the machine must touch with the floor after levelling. The machine must be levelled by means of the calibrated spirit level. Spirit level is put on the vice area. Set the roller conveyors according to the spirit level.
For machine levelling, take care that there is sufficient available space for operation, repair work, servicing of the machine and handling the material.
The machine including appended parts and accessories must be visible from the place of operation.

6.4. Electrical connection

ATTENTION! Only a qualified professional must carry out the servicing and repairs of the electric equipment! Take special care during work with electrical equipment. High voltage shock can have fatal consequences! Always keep notes about work safety!

Electrical parameters of the machine:

Service voltage:	~ 3 x 400 V, 50 Hz, TN-C-S
Total input:	see **Technical data**
Max. fuse:	16 A

<u>Before connecting switch off the main switch of the power supply circuit for the machine and ensure dry place when doing connecting works!</u>

Service voltage must agree with the line voltage!
Crosscut of the supply line must respond with rated current for max. machine load. *Note:* The values of the crosscut of the conductor and the rated current are in the norms. Connect the service cable of the machine on the clamps of the electric distribution. *Note:* The socket with the fork can be used only at the machines with the rated current less than 16A and total input less than 3 kW.

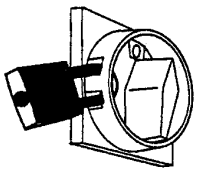

In case the machine is connected with a direct connection, an extra main switch must be added which can be locked in zero position.
Attention! In this case the extra main switch becomes primary and the main switch on the machine has only secondary function.

Check the direction of the saw band!

After the machine has been successfully connected, briefly switch on the machine and put the driving engine of the band in the running position. The direction must be in accordance with the arrow direction on the saw band cover. In case the direction of the saw band does not match, two phases at the terminal strip must be switched.

6.5. Filling of the cooling system

If handling cooling liquid, keep the notes about work safety and instructions of the cooling liquid manufacturer!

Wear protective gloves when working with cooling liquids!

Wear protective goggles!
The cooling liquid can get into your eyes and cause serious injury.

Prepare the mixture of the water and the cooling liquid. Keep the concentration specified by manufacturer.

Fill the mixture of the water and the cooling liquid to the tank of the cooling system. Area of the tank for the cooling liquid is discovered from the chapter „**Technical data**“.

Filling the tank with the cooling liquid, take care that the liquid does not drip out of the tank and the tank does not overflowed.

Keep by manufacturer specified recommendation for adding the anticorrosive agents, the antifreezes or other agents! For mixture of two different mixes can produce toxic and aggressive mixes, which can threaten your health or damage cooling system of the machine!

Note: If the machine is equipped with Microniser (see. **Special accessory**), fill the tank of the Microniser by specified cooling liquid. Microniser is ready for operation.

6.6. Check machine functions

Before starting the check machine functions, you must read the chapter „**Machine operation**“. Do not carry out check machine functions, if you do not comprehend meaning of all buttons and all machine functions.

Check, if the machine or some parts of the machine were not damaged during transport.

Check, if covers are installed and functional.

Check by means of the Tenzomat (see. **Special accessory**), if the saw band is correctly stretched. If it is necessary, you can stretch the saw band according to chapter „**Selection and replacement of the saw band**“. Values of the saw band stretching are on the Tenzomat.

Switch on the main switch and check the motors and systems (saw band drive, hydraulic pump, cooling pump, chips conveyor).

Open and close the main vice and the feeding vice. Drive the front feeder from the front position – GANC model only – to the rear position. Turn the saw frame of the band saw from one outer position to other outer position. Raise the saw frame to the top position and drop the saw frame to the lowest position.

Start the machine with the cooling pump and let it run without load until the cooling system will be filled with cooling liquid. As soon as the cooling liquid starts to escape from the nozzles of the cooling system, the cooling system is ready for the operation.

Carry one cycle of cutting without material. Check, if the machine runs with no irregularities. If all machine functions are right, the machine is ready for operation.

7. Control panel – description

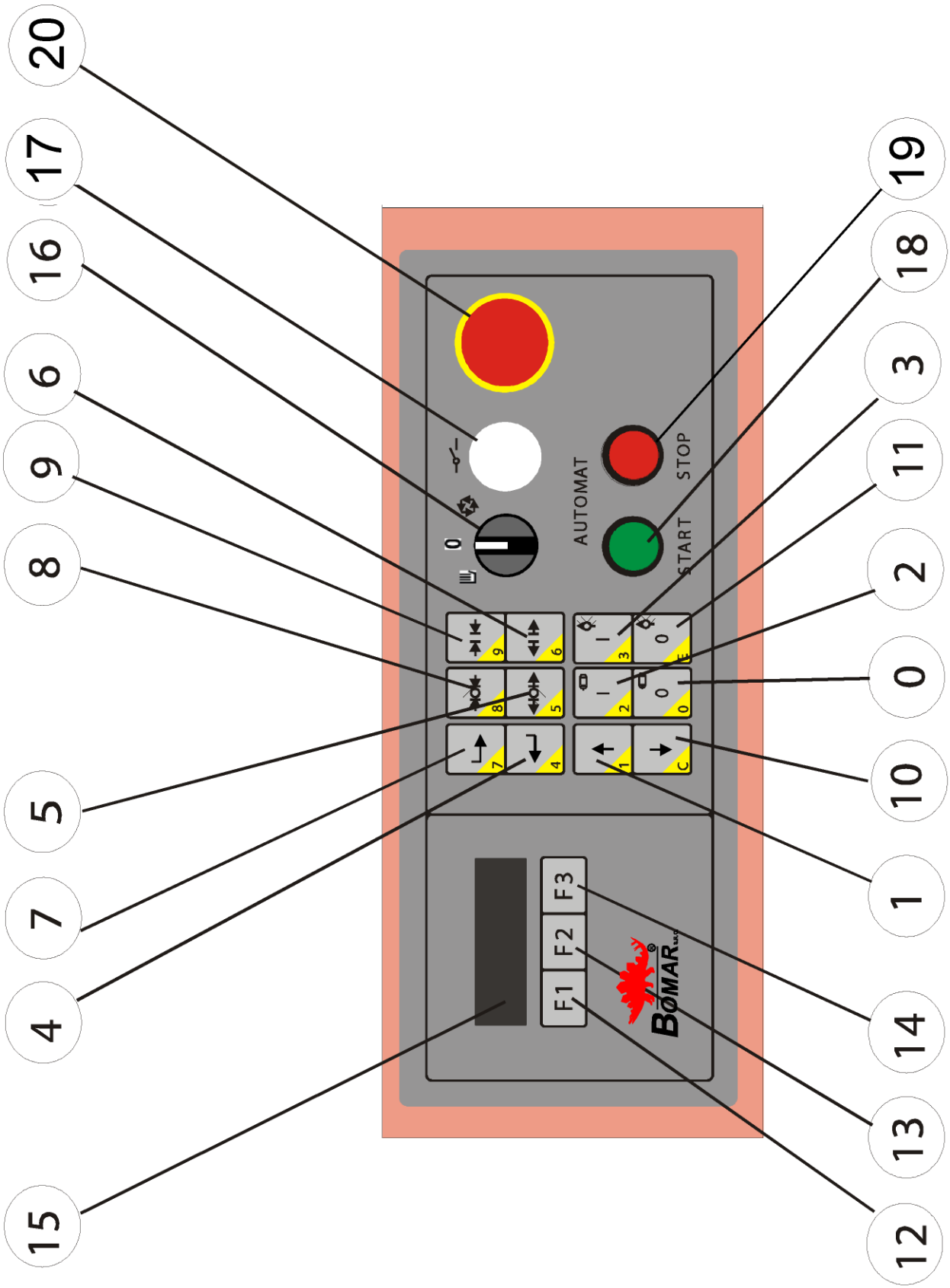

0	**Stop the saw band drive**
1	**Lift the saw frame**
2	**Start the saw band drive**
3	**Start the hydraulic aggregate**
4	**Feeding vice to the back position**
5	**Open the feeding vice**
6	**Open the main vice**
7	**Feeding vice to the forward position**
8	**Close the feeding vice**
9	**Close the main vice**
10	**Saw frame down** Press together buttons **10** and **14** (**F3**), the frame is sinking quickly.
11	**Stop the hydraulic aggregate**
12	**F1 –Functional button** Button function is described below in the text.
13	**F2 –Functional button** Button function is described below in the text.
14	**F3 –Functional button** Button function is described below in the text.
15	**Display** There is depicted operating mode and it allows dialogue with service workers.
16	**Switch** Operating mode pre-selection. Semi-automatic mode Automatic mode **0** Set mode
17	**Safety circuit switching on** Switch on the safety circuit by pressing the button.
18	**START button** It **starts** the automatic cycle by pressing button.
19	**STOP button** It **stops** the automatic cycle by pressing button.

20	**TOTAL – STOP button** Shutting the machine down in emergency!

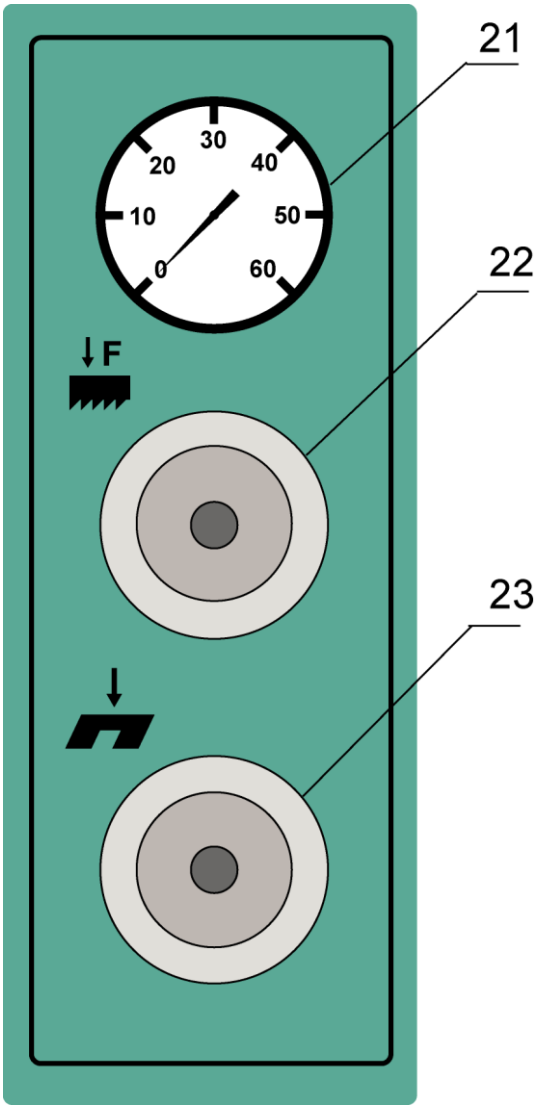

21	**Manometer of cutting pressure**

22	**Regulation of the cutting pressure**

23	**Governing valve** Set the speed of saw arm sinking to the cut by governing valve.

8. Starting the band saw

8.1. Switch on the band saw

Switch on the main switch of the band saw. The main switch is situated on the side of the switchboard.

2) Switch on the safety circuit of the band saw (button 17 – control panel of the band saw).

8.2. Feeder reference position

```
"   MODE SELECTION   "
" Mode select. Switch "
" is in position '0' "
"<REFER>    <SERVICE>"
```

F1 F2 F3

1) Press button **F1**, enter to menu: Reference.

```
" AUTOMATIC SETUP OF "
" REFERENCE POSITION "
"       FEEDER       "
"      <START>       "
```

F1 F2 F3

2) Press button **F2**. Feeder drives to the reference position.

```
" REFERENCE POSITION "
"       FEEDER       "
"    SET CORRECTLY   "
"        <OK>        "
```

F1 F2 F3

3) As soon as the notice “Feeder reference position is set correctly” appears on the display, press button **F2.** Reference position is set.

9. Material insertion

9.1. Safety notes

Keep safety notes!

Wear protective gloves!
Material may have sharp edges and may cause cuts.

Wear protective boots!
Falling cut pieces can cause serious injuries.

Wear protective hardhat!
Falling work pieces can cause severe head injuries.

Never walk under a suspended load!
Never climb onto the gravity-roller conveyor!
Do not hold the material for clamping material to the vice!
The vice can cause injury!

9.2. Handling agent selection

Use the strong handling agents to lift and transfer the material!

Handle with the material only with the lift truck or use the suspension strands and the crane!
Do not use the lift truck or crane in case that you do not have the licence to handle with it!

9.3. Material insertion

Insert material to the vice and ensure that the material cannot move in the vice or fall from the vice after the clamping.

If you cut long pieces of the material (for example rod, tube), you must use the roller conveyors for material shifting to the band saw. The roller conveyors are described in the chapter „**Roller conveyors and accessories**“.

Make sure the conveyor is long enough and the material cannot tip off the conveyor.

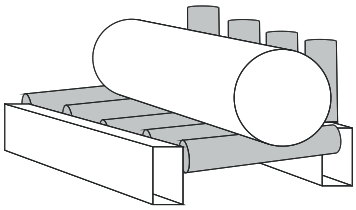

Be especially careful with round materials that it always stays on two vertical rollers and that it cannot fall off the conveyor!

9.4. Bundle material cutting

If you want to cut the material in the bundle, there are suggestions for the positioning of bundles

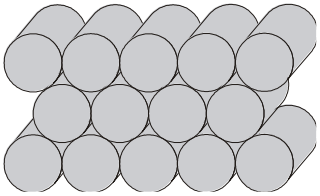

Round material bundle. Take care especially with round material that the bars are put according to the picture. If the bars are put differently, you may have problems with movement.

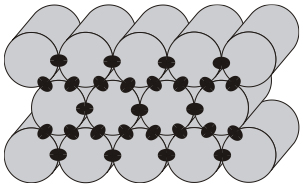

Always weld the material at the rear end of the bundle to secure it from moving. **ATTENTION! Before welding always, switch the machine off at the main switch! The magnetic fields, which often occur during welding, may damage the controls!**

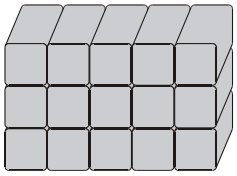

Square material bundle.

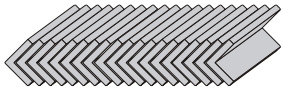

Angled material bundle.

ATTENTION! Not all material shapes are suitable for bundle cuts. Keep the recommendation of your supplier of the saw bands for material insertion to the bundle.

10. Band saw adjusting

10.1. Safety notes

Keep the safety notes! Work the machine with the highest safety!

Wear protective boots!
Falling cut pieces can cause serious injuries.

Wear protective hardhat!
Falling work pieces can cause severe head injuries.

10.2. Angular cut setting

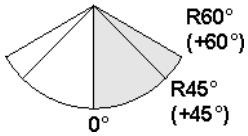

The cut angle can be varied from **0°** to **+60°**. Angles **0°** and **+60°** are set by means of the fixed stop.
Attention! In automatic mode can you cut max 45 °by turning of the arm!

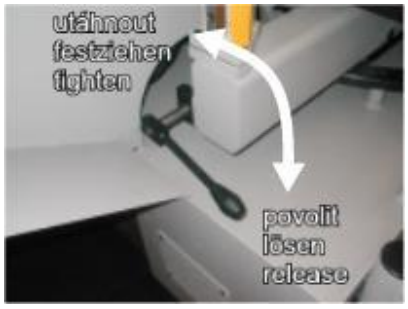

1) Release the securing lever.

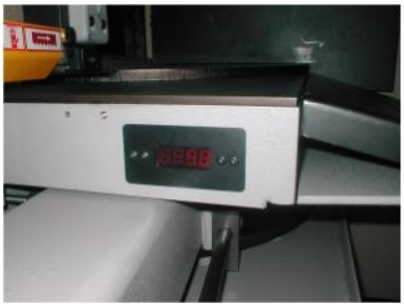

2) Adjust the desired cutting angle according to display (on the saw pillar) and tighten the lever again.

Note: Set the saw frame to the position 0° and press button zeroizing of the angle (on the distribution box under the main switch) after main switch starting of the machine. Angles admeasurement is secured.

10.3. Cutting speed adjustment

The saw band speed is possible to change from 20 to 90 min^{-1}. Makes the cutting speed adjustment:

1) Turn switch **16** to position „".

2) Start the saw band drive by button **2.**

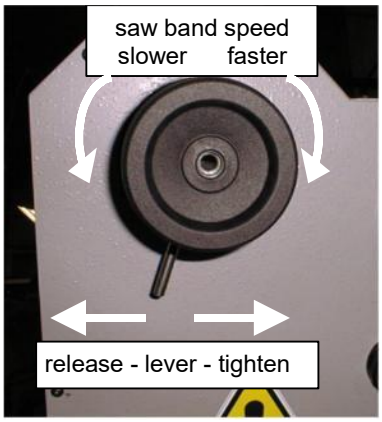

3) Release the securing lever.

4) Adjust the desired band speed.

The saw band speed appears on the display (it is situated on the saw arm).

5) Tighten the securing lever again.

ATTENTION! At least once a week set the saw band speed from the lowest up to the highest speed.

10.4. Optimal adjusting of the guide cubes span

If you want to achieve a smooth and precise cut, it is helpful to position the guide cube as close as possible to the material.

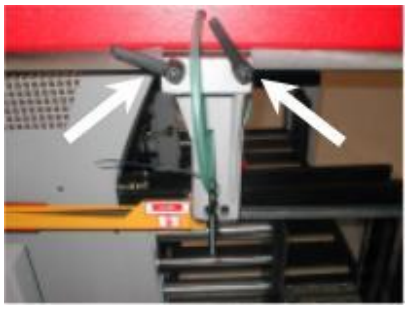

1) Release the lever of the left listel and move left part of the guide apparatus so that the left guide cube edge is as close to the cut material as possible.

2) Lower the frame to the lower position and check the position of the guide cube towards vice loading area. The guide cube must be a distance of at least 10 mm from the vice loading area.

3) Tighten the lever of the gib and check the guide cube setting once more for possible collision with binding table or vice jaw.

10.5. Swarf conveyor operation

Note: The swarf conveyor is supplied to the band saw only by request.

In semi-automatic cycle

Swarf conveyor ON – press together **F1** and **3** buttons.
Swarf conveyor OFF – press together **F1** and **E** buttons.

In automatic cycle

The swarf conveyor operation is adjusted according to chapter Service menu.

10.6. Pressure adjusting to the cut

The band saw individual 610.440 GANC is equipped with pressure to the cut on the right guiding cube. Use the regulation of the cutting pressure num. 22 on the control panel.

11. Semi-automatic cycle

11.1. Safety notes

Keep the safety notes! Work the machine with the highest safety!

Wear protective boots!
Falling cut pieces can cause serious injuries.

Wear protective hardhat!
Falling work pieces can cause severe head injuries.

11.2. Semi-automatic mode

There is possible to make the individual cuts. The adjusting of the desired length is performed semi-automatically.

1) Turn switch 16 to position „“.

2) Open the main and feeding vice by means of buttons 6 and 5.

3) Insert the material to the feeding vice.

4) Clamp the material to the feeding vice by button 8.

5) Drive the material to the desired length, which you want to cut by buttons 4 and 7.

6) Clamp the material to the main vice by button 9.

7) Press button START. The band saw cuts the material.

8) When material cutting is finished, the saw arm is lifted up and button START starts to blink. Now you can remove the blank.

11.3. Cycle breaking

The cycle can be stopped by 2 ways:

a) Press button STOP (button 19 – control panel) – the saw interrupts the actual cut, the saw arm lifts to the starting position and it stops.

b) Press emergency button TOTAL STOP (button 20 – control panel) in emergency causes! The safety circuit is broken and the saw band drive is stopped too.

11.4. Speed adjusting of the arm lowering

Set the speed of the arm lowering to the cut by control valve (position 23 – control panel).

Set the **lower** speed of the arm lowering to the cut by turning the switch **clockwise**.

Set the **higher** speed of the arm lowering to the cut by turning the switch **anti-clockwise**.

Notice: If you keep closing the throttle valve too tightly, the valve seat may wear off which causes its leakage. Therefore, close the valve always gently.

12. Automatic mode

12.1. Safety notes

Keep the safety notes! Work the machine with the highest safety!

Wear protective boots!
Falling cut pieces can cause serious injuries.

Wear protective hardhat!
Falling work pieces can cause severe head injuries.

Attention! In automatic mode can you cut max 45 °by turning of the arm!

12.2. Cycle preset

Turn switch **16** to position „ ⟲ “ to pre-set the automatic cycle.

The band saw allows preset and store 10 programmes. Each of the programs has 20 pre-selections.

Definition explain:

Pre-selection is programme part, which includes the length of blank and pieces number of the set length.
Program consists of 20 pre-selections and it is performed during automatic cycle.

12.2.1. Preset

```
" Preselection No.:  1 of 20 "
" Length:        0.0 mm    "
" Pieces:          0 pcs   "
"<BACK> <NEXT> <DONE>      "
```

F1 F2 F3

1) Adjust the length of blank. Press button **F2**.

```
" Preselection No.:  1 of 20 "
" Length:        0.0 mm    "
" Pieces:          0 pcs   "
"<BACK> <NEXT> <DONE>      "
```

F1 F2 F3

2) Adjust the pieces number. Press button **F2**. Pre-selection number 1 is pre-set.

```
" Preselection No.:  2 of 20 "
" Length:      0.0 mm   "
" Pieces:        0 pcs  "
"<BACK> <NEXT> <DONE>  "
```

F1 F2 F3

3) Pre-set the other pre-selections by repeating points 1 and 2. Press button **F3**. Preset is finished.

Note: Finish the cycle preset by button F3 is impossible, if the length or pieces number has null value in set pre-selection. That means the length and pieces number must be bigger than null.

4) Programme will be effected from beginning to the pre-selection, in which will be finished preset by pressing button **F3 <DONE>**. That means, if you pre-set 3 pre-selections and you finish the preset by pressing button F3, pre-selections 1, 2 and 3 will be effected.

12.2.2. Program storing

The band saw allows storing of 10 different programs.

```
" Preselection No.:  3 of 20 "
" Length:      0.0 mm   "
" Pieces:        0 pcs  "
"<BACK> <NEXT> <DONE>  "
```

F1 F2 F3

1) Press button **F3**

```
" EXTENDED EDITING:     "
" 1 = Preselection      "
" 2 = Memory            "
"<BACK>         <DONE> "
```

F1 F2 F3

2) Press button **2** to enter Memory menu.

```
"***      MEMORY     ***"
" F1 = Load program    "
" F2 = Save program    "
"                <BACK>"
```

F1 F2 F3

3) Press button **F2** to store the program.

```
"***      MEMORY     ***"
" Rewrite mem. No:   X  "
"                       "
"<BACK>  <OK>           "
```

F1 F2 F3

4) Set the memory number (**0-9**), where you want to store the program. Press button **F2**.

```
" Cutting program was  "
"  successfully read   "
"   to memory No: X    "
"         <OK>         "
```

F1 F2 F3

5) Confirm the program storing by pressing button **F2**.

12.2.3. Program selection

```
" Preselection No.:  3 of 20 "
" Length:        0.0 mm"
" Pieces:        0 pcs."
"<BACK> <NEXT> <-FN->  "
```

F1 F2 F3

1) Press button **F3** to open the program.

```
" EXTENDED EDITING:    "
" 1 = Preselection     "
" 2 = Memory           "
"<BACK>        <DONE> "
```

F1 F2 F3

2) Press button **2** to enter Memory menu.

```
"***      MEMORY     ***"
"F1 = Load program     "
"F2 = Save program     "
"              <BACK> "
```

F1 F2 F3

3) Press button **F1** to open the required program.

```
"***      MEMORY     ***"
" Read memory No:   X  "
"                      "
"<BACK>  <OK>          "
```

F1 F2 F3

4) Set the memory number (**0-9**), from which you want to open the program. Press button **F2**.

```
" Cutting program was "
"  successfully read  "
"  from memory No: X  "
"        <OK>         "
```

F1 F2 F3

5) Confirm the program opening by pressing button **F2**.

12.2.4. Editing

The length of blank or pieces number is possible to change this way:

1) Open the program in which you want to make a change (see chap. Program selection).

2) Adjust the pre-selection, which you want to change, by pressing buttons **F1** and **F2.**

```
" Preselection No.: 2 of 20 "
" Length:      200.0 mm"
" Pieces:        2 pcs."
"<BACK> <NEXT> <-FN-> "
```

F1 F2 F3

3) Adjust the new length of the blank. Press button **F2**. The length of blank is changed.

```
" Preselection No.: 2 of 20 "
" Length:      250.0 mm"
" Pieces:        2 pcs."
"<BACK> <NEXT> <-FN-> "
```

F1 F2 F3

4) Adjust the new pieces number. Press button **F2**. The pieces number is changed.

5) You can change the other pre-selections by repeating points 2 - 4. Press button F3, editing is finished.

6) Save the program (see chap. Program storing).

12.2.5. New Preselection inserting

The new Preselection inserting is performed this way:

1) Open the program, in which you want to perform the change (see chapter Program selection).

```
"  Preselection No.:  3 of 20"
" Length:      200.0 mm"
" Pieces:        2 pcs."
"<BACK> <NEXT> <-FN-> "
```

F1 F2 F3

2) Select the preselection, where you want to insert the new preselection by pressing buttons F1 and F2. The new preselection is inserted in front of the old one.

```
" Preselection No.:  3 of 20 "
" Length:      200.0 mm"
" Pieces:        2 pcs."
"<BACK> <NEXT> <-FN-> "
```

F1 F2 F3

3) Press button F3.

```
" EXTENDED EDITING:    "
" 1 = Preselection     "
" 2 = Memory           "
"<BACK>         <DONE> "
```

F1 F2 F3

4) Press button 1 to enter Preselection menu.

```
"*** PRESELECTION  ***"
" F1 = Insert Presel. "
" F2 = Delete Presel. "
"              <BACK> "
```

F1 F2 F3

5) Press button F1 to insert the new Preselection to the program. The other Preselections are shifted.

```
" Preselection No.:  3 of 20 "
" Length:        0.0 mm"
" Pieces:        0 pcs."
"<BACK> <NEXT> <-FN-> "
```

F1 F2 F3

6) Set the new length of the blank. Press button F2.

```
" Preselection No.:  3 of 20 "
" Length:      100.0 mm"
" Pieces:        0 pcs."
"<BACK> <NEXT> <-FN-> "
```

F1 F2 F3

7) Set the new number of the pieces. Press button F2.

8) Now, you can insert the other Preselection by repeating points 2 to 7.

9) Store the program according to the chapter Program storing.

12.2.6. Clearing memory

Clear the adjusted Preselection from the memory is possible this way.

1) Open the program, in which you want to perform the change (see chapter: Program selection).

```
" Preselection No.:  3 of 20 "
" Length:    200.0 mm   "
" Pieces:        2 pcs."
"<BACK> <NEXT> <-FN-> "
```

F1 F2 F3

2) Select the Preselection, which you want to clear by pressing buttons **F1** and **F2.**

```
" Preselection No.:  3 of 20 "
" Length:    200.0 mm   "
" Pieces:        2 pcs."
"<BACK> <NEXT> <-FN-> "
```

F1 F2 F3

3) Press button **F3**.

```
" EXTENDED EDITING:    "
" 1 = Preselection     "
" 2 = Memory           "
"<BACK>         <DONE> "
```

F1 F2 F3

4) Press button **1** to enter Preselection menu.

```
"*** PRESELECTION  ***"
" F1 = Insert Presel. "
" F2 = Delete Presel. "
"              <BACK> "
```

F1 F2 F3

5) Press button **F2** to clear the selected Preselection from the program. The other Preselections are shifted.

6) Now, you can clear the other Preselections by repeating points 2 to 5.

7) Store the program according to chapter: Program storing.

12.3. Automatic cycle with material cutting

If you want to cut the material end before starting of the automatic cycle pre-set, you must continue this way:

1) Make following after finishing of the automatic cycle pre-set.

```
"SETUP OF THE RETURN  "
"POSITION OF SAW-ARM  "
" (pos. after the cut)"
" <END>  <DONE>       "
```

F1 F2 F3

2) Adjust the arm cca 3 cm above the material by pressing buttons „Saw arm up“ (1) and „Saw arm down“ (C). The saw arm will be returned to this height always.

3) Store the adjusted position by pressing button **F2**.

Note: Return to the pre-set by pressing button **F1.**

```
" AUTOMATIC TRIM CUT  "
"                    "
" <YES>         <NO>  "
```

F1 F2 F3

4) Press button **F1** <YES> for material trim cut.

```
" AUTOMATIC TRIM CUT  "
"   Press the START  "
"                    "
```

5) Press button **START** (18). The saw makes the trim cut.

```
" AUTOMATIC TRIM CUT  "
"     Wait until     "
" the cut is finished "
```

6) The report about course of cutting appears on the display during material cutting.

```
"  AUTOMATIC CYCLE    "
"    Press button     "
"        START        "
"                     "
```

7) When the cutting is finished, press button **START** again. The saw makes the pre-set of automatic cycle.

8) Button START starts to blink after finishing of the automatic cycle. Now you can remove blanks.

12.4. Automatic cycle without material cutting

If you **do not want** to cut material end before starting of the automatic cycle pre-set, you must continue this way:

1) Make following after finishing of the automatic cycle pre-set.

```
" SETUP OF THE RETURN "
" POSITION OF SAW-ARM "
" (pos. after the cut)"
" <END>  <DONE>       "
```

F1 F2 F3

2) Adjust the arm cca 3 cm above the material by pressing buttons „Saw arm up“ (1) and „Saw arm down“ (C). The saw arm will be returned to this height always.

3) Store the adjusted position by pressing button **F2**.

Note: Return to the pre-set by pressing button **F1.**

BOMAR, spol. s r.o.
Těžební 1236/1
62700 Brno
CZECH REPUBLIC

```
" AUTOMATIC TRIM CUT  "
"                     "
" <YES>        <NO>  "
```

F1 F2 F3

4) Now press button **F3** <NO>, you do not want to make the trim cut.

```
"  AUTOMATIC CYCLE    "
"    Press button     "
"        START        "
"                     "
```

5) Press button **START**. The saw makes the pre-set of automatic cycle.

6) Button START starts to blink after finishing of the automatic cycle. Now you can remove blanks.

12.5. Cycle breaking

Cycle can be broken by 2 ways:

a) Press button **STOP** (button 19 – control panel) – the saw finishes the actual cut, arm lifts to the starting position and cycle is stopped.

b) Press emergency button **TOTAL STOP** (button 20 – control panel) in emergency causes! The safety circuit is broken and saw band drive is broken too.

12.6. Setting the speed of the saw arm lowering

Set the speed of the arm lowering to the cut by control valve (position 23 – control panel).

Set the **lower** speed of the arm lowering to the cut by turning the switch **clockwise**.

Set the **higher** speed of the arm lowering to the cut by turning the switch **anti-clockwise**.

Notice: If you keep closing the throttle valve too tightly, the valve seat may wear off which causes its leakage. Therefore, close the valve always gently.

13. Blanks removing from the band saw

13.1. Safety notes

Keep the safety notes! Work the machine with the highest safety!

Wear protective gloves!
Material may have sharp edges and may cause cuts.

Wear protective boots!
Falling cut pieces can cause serious injuries.

Wear protective hardhat!
Falling work pieces can cause severe head injuries.

Take care, that there is nobody in the working area of the band saw! The moving material can cause the serious injuries!

13.2. Handling agent selection

Use the strong handling agents to lift and transfer the material!

Handle with the material only with the lift truck or use the suspension strands and the crane!
Do not use the lift truck or crane in case that you do not have the licence to the handle with it!

13.3. Blanks removing

Remove the blanks from the band saw.

14. Service menu

Service – adjusting of the cutting parameters. All parameters are possible to find in service menu.

14.1. Entrance to service menu

```
"   MODE SELECTION     "
" Mode select. Switch "
" is in position '0'  "
"<REFER>    <SERVICE> "
```

F1 F2 F3

Turn switch (16) to position „0“ and press button **F3** to enter to service menu.

14.2. Vice parameters

By setting the time opening of both vices you can set, distance of the movable jaw vices opening, it means, the vice is opened any more, when the time is set longer. This function is used in case of the cutting of the rough materials. Is necessary to set longer vice opening, that the material will be released. Smooth materials has set shorter vice opening. Shorten the time of the cycle. Time of the vices opening is 1 second.

```
" 1 = Clamp params.    "
" 2 = Cooling params. "
" 3 = Cutting params. "
"        <NEXT> <DONE> "
```

F1 F2 F3

1) Press button **1** to enter to menu: Vice parameters.

```
" CLAMP OPENING TIME   "
" <-]O[-> : x.x sec    "
" <-] [-> : x.x sec    "
"        <NEXT> <MENU> "
```

F1 F2 F3

2) Feeding vice (upper row) – adjust the time, press button **F2**.
The main vice (lower row) – adjust the time, press button **F3** for returning to main menu.

14.3. Cooling parameters

You can adjust the type and mode of the band cooling.

```
" 1 = Clamp params.    "
" 2 = Cooling params. "
" 3 = Cutting params. "
"        <NEXT><DONE>  "
```

F1 F2 F3

Press button **2** to enter to menu: Cooling parameters.

14.3.1. Cooling type

You can select the cooling with the water, Microniser or without cooling.

```
" 1 = Cooling type     "
" 2 = Cooling mode     "
"                      "
"              <MENU>  "
```

F1 F2 **F3**

1) Press button **1** to enter to menu: Cooling type.

```
" 1= Water cooling [x]"
" 2= Microniser    [ ]"
" 3= No cooling    [ ]"
"              <MENU> "
```

F1 F2 **F3**

2) Select the desired cooling mode. The selected item is marked „x“.

button **1** – saw band cooling with the water
button **2** – saw band cooling with Microniser
button **3** – without cooling of the saw band

3) Press button **F3**. The selected cooling type is stored and you can return to the previous menu.

14.3.2. Cooling mode

You can select, if you want to stop the cooling in upper or lower position or do not stop the cooling.

```
" 1 = Cooling type     "
" 2 = Cooling mode     "
"                      "
"              <MENU>  "
```

F1 F2 **F3**

1) Press button **2**, to enter to menu: Cooling mode.

```
"1=Top pos shutoff [x]"
"2=Bot.pos shutoff [ ]"
"3=No shutoff      [ ]"
"              <MENU> "
```

F1 F2 **F3**

2) Select the desired mode of cooling stopping. The selected item is marked „x“.

button **1** – stop the saw band cooling after cutting finishing in **top** position of the saw arm.
Button **2** – stop the saw band cooling after cutting finishing in **down** position of the saw arm.
Button **3** – **do not stop** the saw band cooling after cutting finishing.

3) Press button **F3**. The selected cooling type is stored and you can return to the previous menu. To another pressing button **F3**, you can return to the service menu.

14.4. Cutting parameters

You can select, if you want to stop the saw band drive in upper or lower position of the saw arm, or do not stop the drive.

```
" 1 = Clamp params     "
" 2 = Cooling params   "
" 3 = Cutting params   "
"       <NEXT><DONE>   "
```

F1 **F2** **F3**

1) Press button **3** to enter to menu: Cutting parameters.

BOMAR, spol. s r.o.
Těžební 1236/1
62700 Brno
CZECH REPUBLIC

```
"1=Top pos shutoff [x]"
"2=Bot.pos shutoff [ ]"
"3=No shutoff      [ ]"
"              <MENU>  "
```

F1 F2 **F3**

2) Select the desired mode of the saw band stopping. The selected item is marked „x“.

button **1** – saw band stopping in **top** position after cutting finishing.
Button **2** – saw band stopping in **down** position after cutting finishing.
Button **3** – **do not stop** the saw band after cutting finishing.

3) Press button **F3**. The selected mode of band stopping is stored you can return to the previous menu.

14.5. Swarf conveyor operation

Note: The swarf conveyor is added to the band saw only by customer request.

You can select from 3 possibilities of swarf conveyor operation in automatic cycle.

```
" 1 = Clamp params     "
" 2 = Cooling params   "
" 3 = Cutting params   "
"        <NEXT><DONE>  "
```

F1 **F2** **F3**

1) Press button **F2** – other. Shift to the next menu.

```
" 1 = Machine params. "
" 2 = Language        "
" 3 = Swarf conve.mode"
"<BACK> <NEXT> <DONE> "
```

F1 **F2** **F3**

2) Press button **3** to enter to menu: Swarf conveyor operation.

```
" 1=Along with band[ ]"
" 2=Manual shut-off[ ]"
" 3=Manual control [x]"
"              <MENU>  "
```

F1 F2 **F3**

3) Select the desired swarf conveyor operation. The selected item is marked „x“.

Button **1** – starting and stopping of the swarf conveyor together with saw band.
Button **2** – starting of the swarf conveyor automatically, but stopping of the eliminator is performed manually.
Button **3** – starting and stopping of the swarf conveyor is performed manually.

4) Press button **F3**. The selected mode of swarf conveyor operation is stored, you can return to the previous menu.

14.6. Machine parameters

```
"1 = Machine params.  "
"2 = Language         "
"3 = Swarf conve.mode "
"<BACK> <NEXT> <DONE> "
```

F1 **F2** **F3**

1) Press button **1** – Machine parameters to shift to the next menu, where you can set the required parameters.

2) Set the required parameter:

```
" Correct. =        mm "
" Feeder    =        mm "
" F1 = PZH used?    [ ]"
"               <MENU>  "
```

F1 F2 F3

Correct - use numerical keyboard to set the required correction value. This value sets correction of feeding in mm/inch by reason of the width of the saw band.

Feeder - use numerical keyboard to set the required feeding length.

Button **F1** – press to use a pressure device.

14.7. Language

```
"1 = Machine params.  "
"2 = Language         "
"3 = Swarf conve.mode "
"<BACK> <NEXT> <DONE> "
```

F1 F2 F3

Press button **2** – Language to shift to the next menu, where you can set the required language.

First level password (user) is required to enter this menu:

- password: 947

14.8. Length units selection

You can select the length units: millimetres or inches.

```
"1 = Machine params.  "
"2 = Language         "
"3 = Swarf conve.mode "
"<BACK> <NEXT> <DONE> "
```

F1 F2 F3

1) Press button **F2** – other. Shift to the next menu.

```
"1 = Regulator        "
"2 = Length correct   "
"F1= mm(1) inch(0)[1] "
"               <MENU>  "
```

F1 F2 F3

2) Select the length units: millimetres or inches by repeated pressing button **F1.**

1 = millimetres
0 = inches

3) Press button **F3**. The selected parameters are stored and you can return to the previous menu.

14.9. Regulator

```
" 1 = Regulator        "
" 2 = Length correct   "
" F1= mm(1) inch(0)[1]"
"               <MENU> "
```

F1 F2 F3

Reserved for the service purposes.

Second level password (service) is required to enter this menu.

14.10. Length correct

In case of multi-feeding it is possible to set a plus or minus correction value. This value sets correction of each other feeding (except the first) in mm/inch.

```
" 1 = Regulator        "
" 2 = Length correct   "
" F1= mm(1) inch(0)[1]"
"               <MENU> "
```

F1 F2 F3

1) Press button **2** – Length correct to shift to the next menu.

First level password (user) is required to enter this menu:

- password: 947

```
" Korekce =      0,2 mm"
" Korekce = 0,008 inch"
" F1=0=(t)    1=(-) [1]"
"                <MENU> "
```

F1 F2 F3

2) Use numerical keyboard to set the required correction value.

Press button **F1** to change the plus or minus correction value.

3) Press button **F3**. The selected parameters are stored and you can return to the previous menu.

14.11. Service menu closing

```
"1 = Machine params.  "
"2 = Language         "
"3 = Swarf conve.mode "
"<BACK> <NEXT> <DONE> "
```

F1 F2 F3

Press button **F3**. Service menu is closed.

15. Selection and replacement of the saw band

15.1. Safety notes

Wear protective gloves!
The saw band has sharp teeth and can cause serious injuries to your hands.

Wear protective goggles!
The saw band can snap during assembly and seriously injure your eyes.

Refit the saw band cover only after you have installed and tightened the saw band.

15.2. Saw band sizes

6400 x 41 x 1,3 mm

15.3. Selection of the saw band tooth system:

The manufacturers provide the saw bands with constant and variable tooth system. The important factor for selection of the tooth system is length of the cutting canal with respect to the size of the product.

1) Constant tooth system – the saw band has parallel tooth pitch all over length. This way is suitable for cutting of solid material.

2) Variable tooth system – tooth pitch is variable. Variable tooth system is used for profiled materials and bundle cutting. Variable tooth pitch lowers vibration of the saw band, increases service life of the saw band and quality of the cutting area.

In tables, there are advised type of the tooth system depending on sizes and form of the cutting material.

Footnotes:
ZpZ – teeth number on one inch.
S – tooth with zero angle of the teeth.
K – tooth with positive angle of the teeth.

Examples of the tooth system marking:
32 S – number „32“ means 32 teeth on one inch (that means constant tooth system), letter „S“ marks teeth with zero angle of the tooth.
4-6 K – number „4-6“ means 4 till 6 teeth on one inch (that means variable tooth system); letter „K“ marks teeth with positive angle of the teeth.

Tables for teeth selection:

SHAPED MATERIAL (Dp, S = mm)

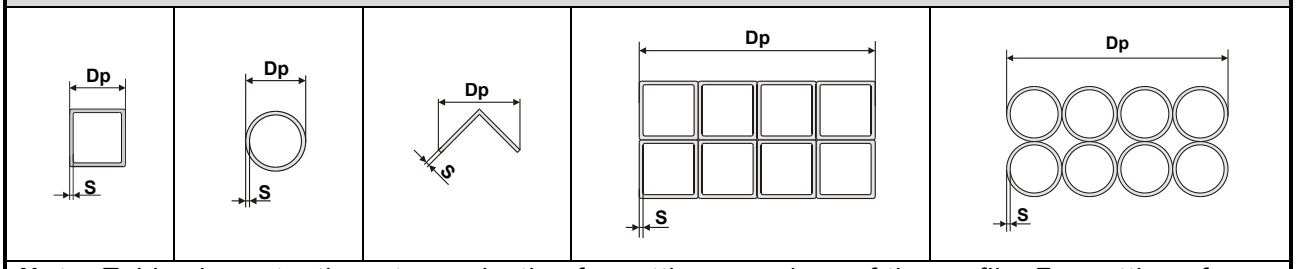

Note: Table shows tooth system selection for cutting one piece of the profile. For cutting of more pieces of the profiles (bundle), you must think of the size of the wall as double size of the wall of one profile (that means, size „S“ equates to 2 x S). In table, there are tooth systems constant and variable.

Size of the wall S [mm]	Tooth system (ZpZ) Outer diameter of the profile Dp [mm]					
	20	**40**	**60**	**80**	**100**	**120**
2	32 S	24 S	18 S	18 S	14 S	14 S
3	24 S	18 S	14 S	14 S	10 – 14 S	10 – 14 S
4	24 S	14 S	10 – 14 S	10 – 14 S	8 – 12 S	8 – 12 S
5	18 S	10 – 14 S	10 – 14 S	8 – 12 S	6 – 10 S	6 – 10 S
6	18 S	10 – 14 S	8 – 12 S	8 – 12 S	6 – 10 S	6 – 10 S
8	14 S	8 – 12 S	6 – 10 S	6 – 10 S	5 – 8 S	5 – 8 S
10	-	6 – 10 S	6 – 10 S	5 – 8 S	5 – 8 S	5 – 8 S
12	-	6 – 10 S	5 – 8 S	5 – 8 S	4 – 6 K	4 – 6 K
15	-	5 – 8 S	5 – 8 S	4 – 6 K	4 – 6 K	4 – 6 K
20	-	-	4 – 6 K	4 – 6 K	4 – 6 K	3 – 4 K
30	-	-	-	3 – 4 K	3 – 4 K	3 – 4 K
50	-	-	-	-	-	3 – 4 K

Size of the wall S [mm]	Tooth system (ZpZ) Outer diameter of the profile Dp [mm]					
	150	**200**	**300**	**500**	**750**	**1000**
2	10 – 14 S	10 – 14 S	8 – 12 S	6 – 10 S	5 – 8 S	5 – 8 S
3	8 – 12 S	8 – 12 S	6 – 10 S	5 – 8 S	4 – 6 K	4 – 6 K
4	6 – 10 S	6 – 10 S	5 – 8 S	4 – 6 K	4 – 6 K	4 – 6 K
5	6 – 10 S	5 – 8 S	4 – 6 K	4 – 6 K	4 – 6 K	3 – 4 K
6	5 – 8 S	5 – 8 S	4 – 6 K	4 – 6 K	3 – 4 K	3 – 4 K
8	5 – 8 S	4 – 6 K	4 – 6 K	3 – 4 K	3 – 4 K	3 – 4 K
10	4 – 6 K	4 – 6 K	4 – 6 K	3 – 4 K	3 – 4 K	2 – 3 K
12	4 – 6 K	4 – 6 K	3 – 4 K	3 – 4 K	2 – 3 K	2 – 3 K
15	4 – 6 K	3 – 4 K	3 – 4 K	2 – 3 K	2 – 3 K	2 – 3 K
20	3 – 4 K	3 – 4 K	2 – 3 K	2 – 3 K	2 – 3 K	2 – 3 K
30	3 – 4 K	2 – 3 K	2 – 3 K	2 – 3 K	1,4 – 2 K	1,4 – 2 K
50	2 – 3 K	2 – 3 K	2 – 3 K	1,4 – 2 K	1,4 – 2 K	1,4 – 2 K
75	-	2 – 3 K	1,4 – 2 K	1,4 – 2 K	1,4 – 2 K	0,75 – 1,25 K
100	-	-	1,4 – 2 K	0,75 – 1,25 K	0,75 – 1,25 K	0,75 – 1,25 K
150	-	-	-	0,75 – 1,25 K	0,75 – 1,25 K	0,75 – 1,25 K
200	-	-	-	0,75 – 1,25 K	0,75 – 1,25 K	0,75 – 1,25 K

SOLID MATERIAL (D = mm)

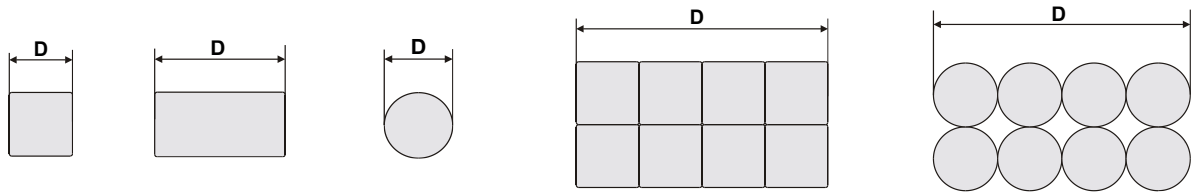

Constant tooth system	
length of the cut D	tooth system (ZpZ)
to 3 mm	32
to 6 mm	24
to 10 mm	18
to 15 mm	14
15 - 30 mm	10
30 - 50 mm	8
50 - 80 mm	6
80 - 120 mm	4
120 - 200 mm	3
200 - 400 mm	2
300 - 800 mm	1,25
700 - 3000 mm	0,75

Variable tooth system	
length of the cut D	tooth system (ZpZ)
to 30 mm	10 -14
20 - 50 mm	8 - 12
25 - 60 mm	6 - 10
35 - 80 mm	5 - 8
50 - 100 mm	4 - 6
70 - 120 mm	4 - 5
80 - 150 mm	3 - 4
120 - 350 mm	2 - 3
250 - 600 mm	1,4 - 2
500 - 3000 mm	0,75 - 1,25

Despite the above recommendations, please follow your supplier's advice!

15.4. Saw band running - in

To ensure a full service life of the saw bands, we strongly recommend that you carry out the „RUN-IN" process.

Running in: Cut the material with the frame lowering reduced to 50% only. When vibrations occur increase or decrease the band speed.

When cutting small pieces run the band until approximately 300 cm^2 of material has been cut.
When cutting large pieces run the band for 15 minutes approximately.
When the band has been run, increase the lowering-speed to normal speed.

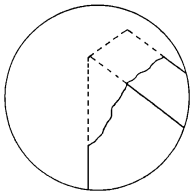

The running in of the saw band avoids micro-breaks on the cutting edges of new saw band ensuing from first excessive stress. This would decrease service life substantially.

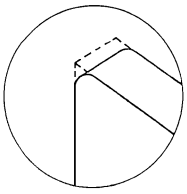

The optimal running in of the saw band produces ideal rounded cutting edges and therefore the conditions for an optimal service life.

Note: Run regrinding saw bands too!

15.5. Saw band dismantling

1) Lift the saw arm to the top position.

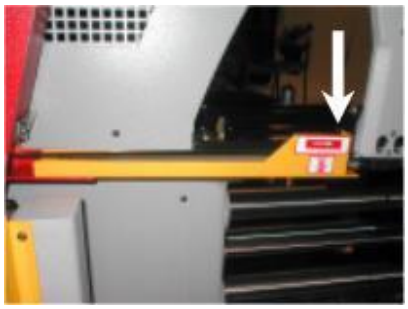

2) Dismantle yellow protective cover of the saw band. The cover is fastened with screw.

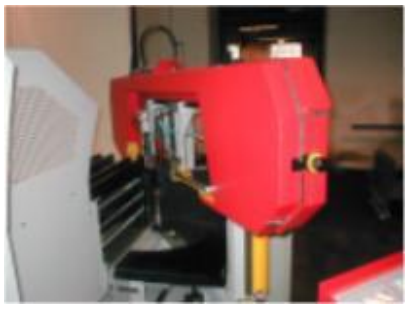

3) Release clasps on arm cover and open it.

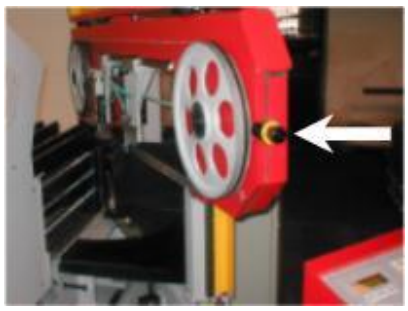

4) Turn by stretching star to the left side, release saw band stretching.

5) Pull saw band from blade wheels.

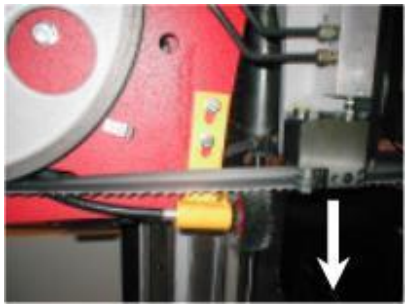

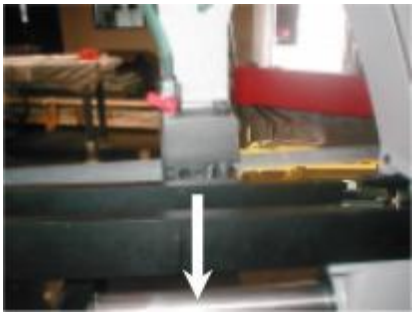

6) Pull up the saw band from the guiding cubes.

15.6. Saw band installation

1) Prior to installation, clean all track wheels, guide cubes and inner side of the arm thoroughly of all traces of chips and dirt. Keep in mind the teeth direction when installing the saw band.

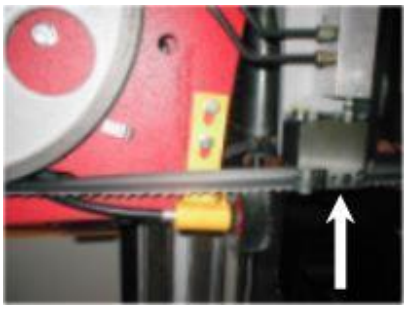

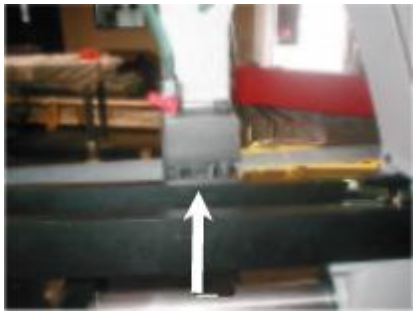

2) Insert new saw band in the guide cubes. Make sure the saw band runs between both guide rollers and it is pushed all the way to the top.

3) Put the saw band on both guide wheels. Make sure that the saw band ridge fits tightly to the wheel rim. Then push the saw band as far back as possible.

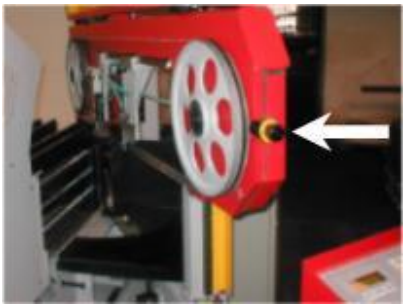

4) By turning the stretching star to the right, you will stretch the saw band slightly. Remove the plastic cover of the saw band teeth.

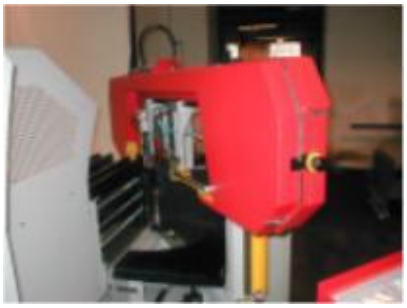

5) Close the rear cover of the arm.

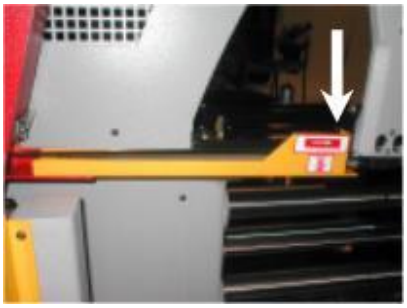

6) Install the yellow protective cover of the band. The arrow on the cover must match the direction of the arrow on the band. If it does not match, you must turn the band round.

15.7. Saw band stretching and inspection

Right saw band stretching is one of the most important criteria's, which influents accuracy and saw band service life. Stretch the saw bands according to the selected saw band and the band saw. Keep the recommendation of your manufacturer.

15.7.1. Saw band stretching

1) The saw band must not fall from the wheels after setting.

2) Install the Tenzomat on the saw band and secure it with screws.

3) Stretch the saw band until it is stretched to the recommended value.

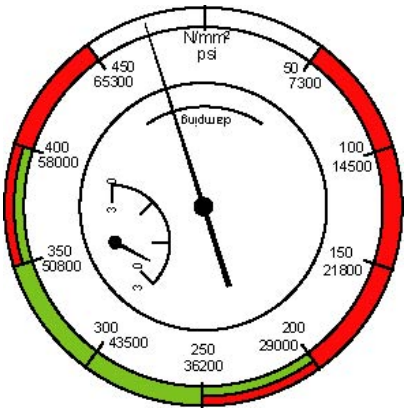

Attention! Saw band tension has to be always in ***green*** area of the Tenzomat. Keep the following values:

Size of the saw band (mm)	Value (N/mm²)
41 x 1,3 mm	250 N/mm²

If the value is under 250 N/mm² and the needle is in red area, the saw band is not stretched enough.

Attention! It is possible to use manometer to stretch the saw band. In this case keep the following values:

Size of the saw band (mm)	Value (bar)
41 x 1,3 mm	150 bar

15.7.2. Saw band inspection

Check the saw band in the guiding cubes and on the wheels.

1) Check, if the saw band is right in the guiding cubes.

2) Switch on saw band drive and then after 10 seconds switch off saw band drive. If the saw band drive is not possible to switch on, set the limit switch of the saw band stretching according to the chapter „**Servicing and adjustment**“.

3) Switch off the main switch.

4) Open cover(s) of the wheels and check position of the saw band on the both wheels.

- if the distance between backside of the saw band and the offset wheel is **1 – 3 mm**, setting is right.

- if the distance is bigger than **3 mm**, or the saw band is on the offset of the wheel, set the saw band according to chapter „**Servicing and adjustment**“.

5) Close cover of the saw band.

16. Cooling agents and chips disposal

16.1. Safety notes

Keep notes about work safety for handling cooling liquid!

When handling cooling agents always wear hazardous fluid-proof gloves!

Wear protective goggles!
Cooling liquid can get in contact with your eyes and may cause permanent severe injuries.

Instructions for first help

Pull off and safely remove polluted, soaked clothing.
For breathing, go out in the fresh air or look for first aid treatment.
Wash with water or use crèmes for contact with the skin.
Flush with water for eyes and look for first aid treatment.
For swallowing, drink a lot of water and induce vomiting.
Look for medical help.

16.2. Cooling liquid preparation

Prepare the mix of the water and cooling liquid. Conform the notes of the manufacturer and keep manufacturer-approved concentration.

All instructions are stated on the tank of the cooling liquid or in documents of the cooling liquid. For cooling liquid using and liquidation reads date of cooling liquid manufacturer, which it is necessary to keep.

Fill the mix of water and cooling liquid to the tank of the cooling system. The capacity of the tank for the cooling liquid is stated in chapter „**Technical data**“.

When filling tank with the cooling liquid take care that the liquid will not drip out of the tank and the tank will not overflow.

Keep manufacturer specified recommendations for adding the anticorrosive agents, the antifreeze or other agents! For mixture of two different mixes can produce toxic and aggressive mixes, which can peril your health or damage cooling system of the machine!

Note: If the machine is equipped with Microniser (see **Special accessory**), fill the tank of the Microniser by specified cooling liquid. Microniser is ready for the operation.

The quality of the cooling agent will deteriorate due to:

- use of contaminated water
- impurity
- outside oil contamination (hydraulics, gears)
- high operating temperatures
- lack of air circulation
- wrong concentration

If the solution is too weak:

- corrosion protection is diminished
- lubrication decreases
- microbial attack is more likely

If the solution is too strong:

- the cooling ability is decreased
- foam behaviour increases
- emulsions stability deteriorates
- sticky residue develops

16.3. Coolant device inspection

The state of the cooling agent has significant influence on the cutting quality and on the operational life of the machine. Lifetime of the cooling liquid is 1 year, after this time we recommend change the cooling liquid. This time is dependent on the degree of pollution cooling liquid (especially with oils) and on the other factors. Check level of the cooling liquid and function of the pump periodically!

Check the state of the cooling agent according to the following table:

Testing	Interval	Method	Condition	Precaution
Liquid level	daily	visually	too low	after concentration check, refill with water or emulsion
Concentration	daily	refractometer densimeter	too high too low	refill water refill base emulsion
Smell	daily	by sense of smell	unpleasant smell	good ventilation, add biocides or renew coolant
Contamination	daily	by sense of smell	visible oil leaks, sludge fungi	surface cleaning, fix leaks, add biocides or fungicides, or coolant renewal after added system cleanser*
Corrosion-protection	when necessary	visually chip test Herbert-test	insufficient corrosion protection	test stability, if necessary – increase concentration or pH value
Stability	when necessary	refractometer	oiling	add concentrate, enquiries to supplier
Foam reaction	when necessary	shaking test	too much foam, foam disperses too slowly	avoid aeration, increase water hardness, ix with defoamer

* according to manufacturers' instructions.

Note: If the state of the cooling liquid is not satisfactory, the cooling liquid must be changed.

16.4. Chips disposal

Chips resulting from cutting operations must be disposed of in accordance with the relevant regulations.

- Let the chips drip excess fluid!
- Fill a watertight container with the chips! Be careful that the container does not leak, because even after a long dripping time, they still contain coolant residue.
- Place the container into the care of a disposal company equipped for the disposal of chips contaminated with cooling liquid. In case the machine is equipped with micro-spray installation, the chips must also be handed over to a disposal company.

17. Greases and oils

17.1. Gearbox oils

In gearboxes, oil is used for the whole lifetime of the gearbox. We recommend replacing of the filling oil in case of repair.

Use oils with specification DIN 51517 in the gearboxes. Select the viscosity grade ISO VG according to the original oil fill.

Note: When replacing, use oils recommended by BOMAR or oils, which has comparable parameters from the other manufacturers. Do not forget, that mineral and synthetic oils must not be mixed!

Recommended oils and quantity according to the type of the band saw

The band saw	Gearbox oil	Capacity
Individual 410.260 GANC	Shell Tivela S 320	0,85 l
Individual 410.260 GH	Shell Tivela S 320	0,85 l
Individual 510.330 GANC	Shell Tivela S 320	1,8 l
Individual 510.330 GH	Shell Tivela S 320	1,8 l
Individual 610.440 GANC	Shell Tivela S 320	2,3 l
Individual 610.440 GH	Shell Tivela S 320	2,3 l
Swarf conveyor	Shell Tivela S 320	0,075 l

Comparative table of the gearbox oils

Manufacturer	Viscosity grade		
	ISO VG 100	ISO VG 220	ISO VG 320
BP	Energol GR-XP 100	Energol GR-XP 220	Energol GR-XP 320
Castrol	Alpha SP 100 Alpha MW 100	Alpha SP 220 Alpha MW 220	
Elf	Reductelf SP 100	Reductelf SP 220 Reductelf Synthese 220	Reductelf SP 320
Esso	Spartan EP 100	Spartan EP 220	Spartan EP 320
Mobil	Mobilgear 627	Mobilgear SHC 220 Mobilgear 630	Mobilgear 632
ÖMV		PG 220	
Paramo	PP 7	Paramo CLP 220	Paramo CLP 320
Shell	Shell Omala 100	Shell Omala 220 Shell Tivela S 220	Shell Omala 320 Shell Tivela S 320
Total	Carter EP 100	Carter EP 220	Carter EP 320

17.2. Hydraulic oils

Note: This chapter is only for the band saws, which has hydraulic equipment.

Replace the hydraulic oil once in 2 years, because the oil can deteriorate its properties and cause problems the hydraulic equipment. If the hydraulic system is equipped with filter (2SF 56/48-0,063), replace the filter too.

Use oils with specification DIN 51524-HLP, ISO 6743-4 and viscosity grade ISO VG 46 in hydraulic aggregates. Hydraulic oils quantity – see chapter **Hydraulic oil level check**.

Note: When replacing, use oils recommended by BOMAR or oils, which has comparable parameters from the other manufacturers. Do not forget, that mineral and synthetic oils may not be mixed!

Comparative table of the hydraulic oils

Manufacturer	Type	Manufacturer	Type
Agip	Oso 46	Ina	Hidraol 46 HD
Aral	Vitam GF 46	Klüber	Lamora HLP 46
Avia	Avilub RSL 46	Hungary	Hidrokomol P 46
Benzina	OH-HM 46	Mobil	Mobil DTE 25
BP	Energol HLP 46	ÖMV	HLP 46
Bulgaria	MX-M/46	Poland	Hydrol 30
Castrol	Hyspin AWS 46	Rumania	H 46 EP
Čepro	Mogul HM 46	Russia	IGP 30
DEA	Astron HLP 46	Shell	Tellus Oil 46
Elf	Elfolna 46	Sun	Sunvis 846 WR
Esso	Nuto H 46	Texaco	Rando HD B 46
Fam	HD 5040	Valvoline	Ultramax AW 46
Fina	Hydran 46		

17.3. Lubricant greases

We recommend using lithium based saponified grease, class NGLI-2 for lubrication. Different greases are mixable, if their oil bases and consistence type are identical.

Comparative table of the lubricant greases

Manufacturer	Type of the lubricant grease
BP	Energrease LS - EP
DEA	Paragon EP1
Esso	FETT EGL 3144
	Beacon EP 1
	Beacon EP 2
FINA	FINA LICAL M12
Klüber	Microlube GB0
	Staburags NBU8EP
	Isoflex Spezial
Optimol	Optimol Longtime PD 0, PD1, PD2
Shell Aseol AG	ASEOL Litea EP 806-077
Texaco	Multifak EP1

18. Service

18.1. Machine cleaning

Clean the machine from the cooling liquid and impurities after every shift stopping. Conserve the guiding surfaces, mainly:

- Clamping jaws guiding of the main and feeding vice.
- The guiding of the feeder.
- Loading surface of the main, feeding vice, and area under them.

18.2. Lubrication

There are several placing on the machine, which are necessary to grease periodically. It secures the right function of the machine.

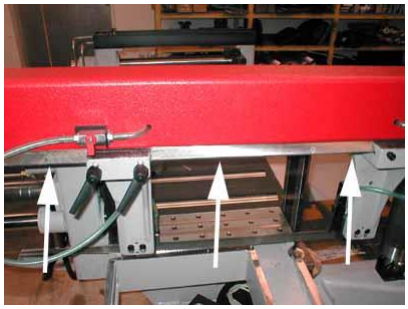

- The guiding cubes leading – grease with oil from both sides once a week.

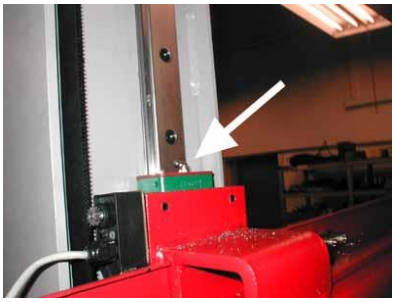

- The linear guiding of the saw arm – lubricate with grease once a three months (see chapter **Lubricant greases**). Use 3-5g grease on the every carriage of the linear guiding. Use the grease gun to the lubrication. Drive 3-5 times whole line of the linear guiding during lubrication.

18.3. Cooling liquid inspection

Check the state of the cooling liquid periodically. Keep notes in chapter **Cooling agents and chips removal** for state checking and cooling liquid filling.

If the cooling liquid is little in the tank, it can cause the damage of the saw band influences insufficient cooling.

The excess liquid can overflow from the tank on the floor, the service worker can slide and he can injure.

18.4. Hydraulic oil level check

Note: This chapter is only for the band saws, which has hydraulic equipment.

Recommended type of the hydraulic oil is placed in chapter **Hydraulic oils**.

Pull up the gauge and check the state of the oil. The oil level must be situated between water-glas.

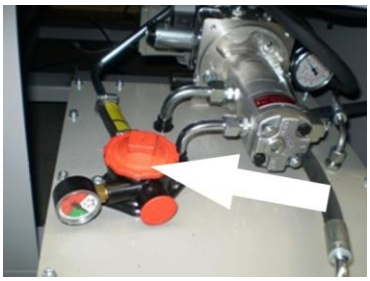

Fill the hydraulic oil, if it is necessary (arrow). Use always the filter (25 μm or better) when you fill the oil. You avoid impurities penetration to the hydraulic system and troubles in hydraulic system.

19. Adjustment

19.1. Guiding cubes adjustment

The guiding cubes are set from the manufacturer. Guiding cubes are not set during whole lifetime.

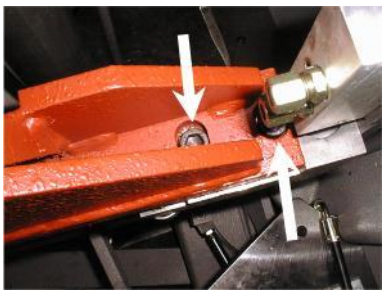

1) Release screws on both guiding cubes.

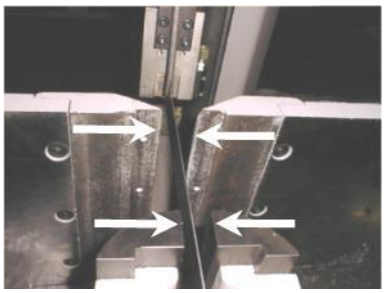

2) Set the guiding cubes so, that the band runs between vice jaws. Tighten screws on the guiding cubes again.

3) The guiding cubes are set.

19.2. Hard metal guides adjustment

Hard metal guides adjustment is one of the most important criterions which influences cutting accuracy and saw band life. Therefore, it is essential to check regularly that hard metal guides adjustment is correct.

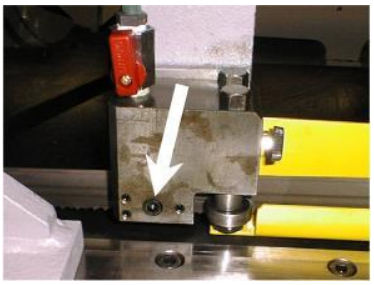

1) Release the screw. The screw holds the guide in the guiding cube. Make sure, that the guide of the hard metal does not falls.

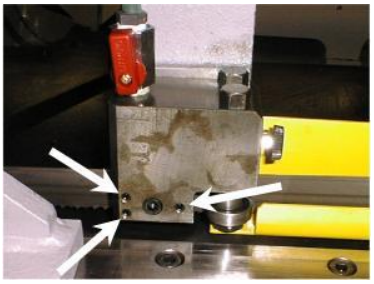

2) Press the guide on the saw band by tighten three screws. Check, if the hard metal guide does not put up to much resistance against the movement of the band. As soon as it is possible to move the band without resistance (and between saw band and the guide is not width) the hard metal guides are adjusted.

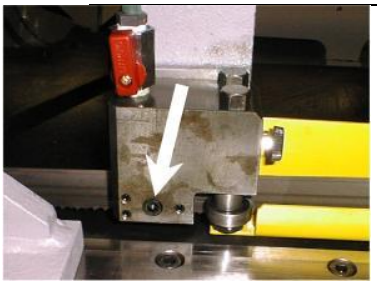

3) Tighten the screw. The screw holds the guide in the guiding cube. Make sure, that the guide did not damaged.

4) Be sure that the hard metal guides do not put up to much resistance otherwise the lifetime of the saw band and drive decreases.

19.3. Saw band run adjustment on stretching wheel

Saw band run on the stretching wheel must be regularly inspected. The inspection has to follow every saw band replacement.

Saw band run inspection

If the run is not correct, the following problems may occur:

The saw band falls off the wheel
The saw band and protective cover can be damaged.

The saw band runs on the wheel rim
The saw band and wheel rim can be damaged.

1) Start and stop saw band drive.
2) Stop the main switch!
3) Open rear cover of the saw frame.

4) Check saw band placing on the wheels.

- If the distance of the rear part of the saw band from wheel rim is 1 – 3 mm, setting is right.
- If the distance is bigger than 3 mm, or the saw band runs on the wheel rim, saw band run must be set.

Saw band setting

The saw band run is set with screw in the stretching cube on the saw frame. Optimal distance has been determined at **1 – 3 mm**.

- Turn by screw to the right, the saw band approximates to the stretching wheel rim.
- Turn by screw to the left, the saw band departs from the stretching wheel rim.

Check saw band run again after setting.

19.4. Brush adjustment

The brush for chip removal from the saw band influences cutting durability, saw band lifetime and wheels lifetime, hard metal guides and finally the cut accuracy. Brush adjustment must be checked every shift.

1) Release screws on the brush holder.

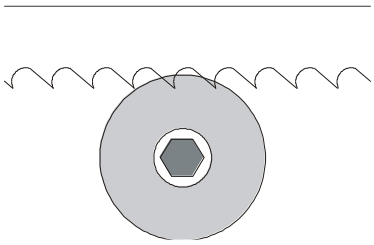

2) Set the brush to the saw band so, that brush touches with band.

3) Tighten the screws.

19.5. Limit switch setting of the saw band stretching

After the saw band is replaced, the limit switch setting must be checked out. If the limit switch is not set correctly, the band is stretch too much or it is to loose.

1) Stretch the saw band by means of TENZOMAT on the optimal value.
2) Release the nut on the stop screw.
3) Start the driving engine. Two scenarios can occur:

a) If the engine is switched on, but it does not run, turn the screw to the left until the engine starts to run.

b) If the engine runs turn the screw to the right until it stops to run, then turn the screw shortly to the left until the engine starts to run again.

4) Secure the stop screw with nut and check the switch setting once more.

In case of use hydraulic band tensioning, BSPA indicator , you must titghten a blade, **up to green arrow** on the manometer .

19.6. Limit switch of the saw frame lower position adjustment

Check setting

Lower the saw frame to the bottom position. If the saw frame is on the lower stop and the limit switch was responded, the limit switch adjustment is right. If the limit switch is not right, it must be set.

Limit switch setting

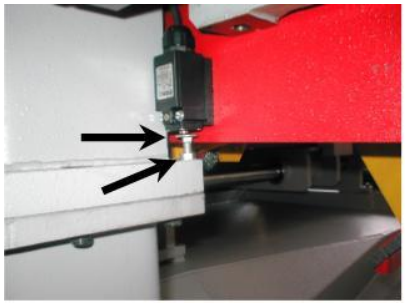

1) Release the nut of the stop screw of the switch and screw on the screw.
2) Lower the saw frame to the lower stop. Start the saw band drive.
3) Screw off the stop screw of the switch, until the saw band drive is not stopped.
4) Secure the screw with the nut and check limit switch adjustment again.

19.7. Adjustment of the cutting pressure regulation

This chapter describes the basic speed setting of arm sinking to the cut for idle run. The band saw is equipped with cutting pressure regulation on both guiding cubes. Cutting pressure regulation is set separately on every guiding cube.

Setting on the right guiding cube

1) Close the tap on the left guiding cube. Let the tap opened on the right guiding cube.

Left guiding cube **Right guiding cube**

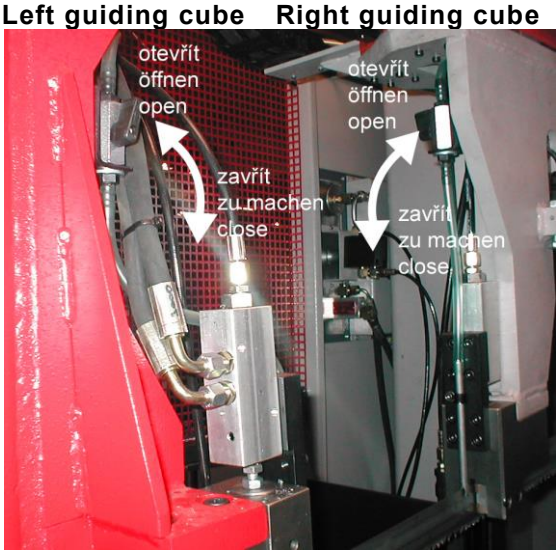

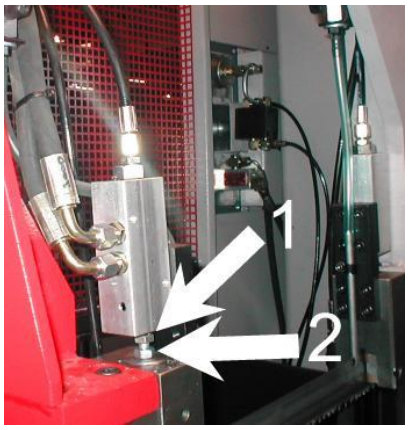

2) Screw off the set – screw on the right guiding cube to the stop, the valve is blocked (pos1). You can move by arm only up, because the arm movement down is blocked with pressure regulation valve.

3) Press button „Arm down“ and slowly screw on the set – screw on the right guiding cube. Screw by set – screw until the optimal speed of the arm sinking is not reached. The optimum speed of the arm sinking to the cut from maximum lift until lower stop is about 55 seconds.

4) Secure the set – screw with nut (pos. 2) for reaching of the optimum speed of the arm sinking.

5) Pressure regulation on the right guiding cube is set.

Setting on the left guiding cube

6) Open the tap on the left guiding cube. Close it on the right guiding cube.

7) Set the cutting pressure regulation on the left guiding cube in the same way.

8) Open taps on both guiding cubes after pressure regulation setting. **ATTENTION!** Both taps must be opened during operation!

10) Setting is ended.

19.8. Pressure switch adjustment

In hydraulic system is residual pressure after hydraulic aggregate stopping!

The pressure switches are in the block of the hydraulic aggregate.

The pressure switch of vice is marked with yellow band **SQ xx** or pressure switch of feeding vice with yellow band **SQ 1** must be adjusted on occasion :

Pull off the elastic cover of the pressure switch (carefully – outlets must not be broken).

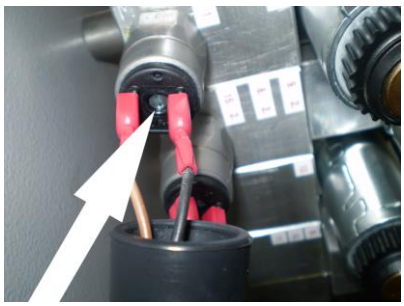

Set the sensitivity of the pressure switch by means of the screwdriver.
Turn by screwdriver to the left, the sensitivity is bigger.
Turn by screwdriver to the right, the switch will be clip with higher pressure.
Check limit switches adjustment

The vice is clamped - The pilot light 10.1 of the control system are lighted.

The vice is opened – The pilot light 10.1 of the control system are not lighted.

The vice is on the move – The pilot light are not lighted, they are not winked.

Return the cover on the pressure switch after adjustment.

19.9. Pressure adjustment of the hydraulic system

In hydraulic system is residual pressure after hydraulic aggregate stopping!

Pull off the black cover of the pressure valve.

Release the nut of the pressure valve.

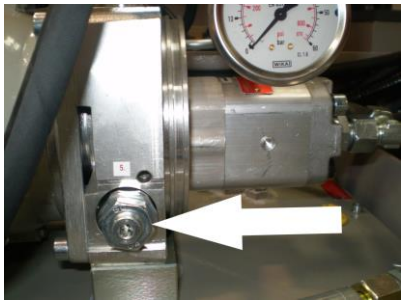

Higher pressure – turn the pressure valve to the clock's direction.
Lower pressure – turn the pressure valve against the clock's direction.

Set the pressure by means of the pressure valve and manometer.
If the pressure is adjusted, tighten the nut.

20. Worn pieces replacement

20.1. Pushing bearing replacement

If it is impossible to adjust the bundle gripping assembly and the pushing bearing is worn, it needs to be replaced.

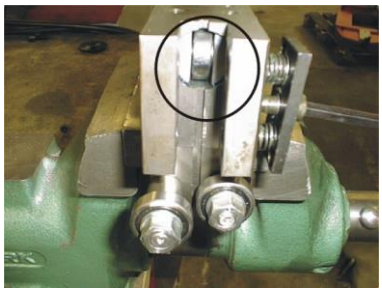

The bearing condition is possible discover, on the cube from the bottom side, for a better inspection is possible to put out the holder of the bearing from the cube.

If the bearing is worn, there is a visible channel on it.

Bearing replacement

1) Dismantle the saw band.

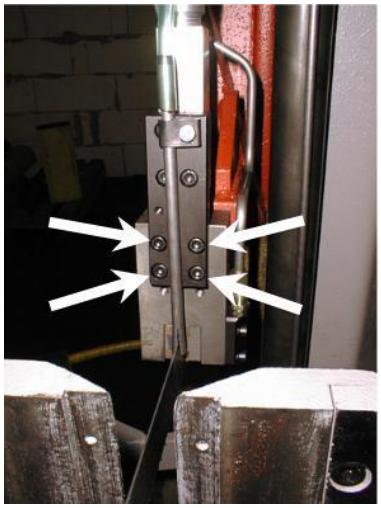

2) Disconnect the cutting pressure regulation. Let cutting pressure regulation connected to the hydraulic system.

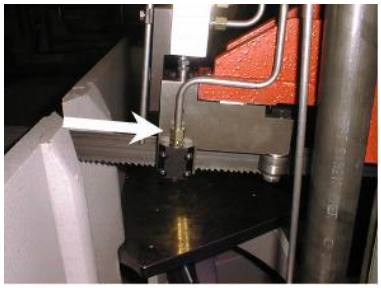

3) Release the hydraulic tube connected to the hard metal guide.

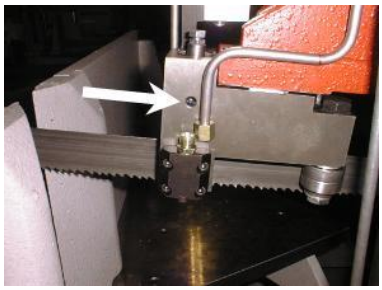

4) Release the fixative pin of the bearing holder.

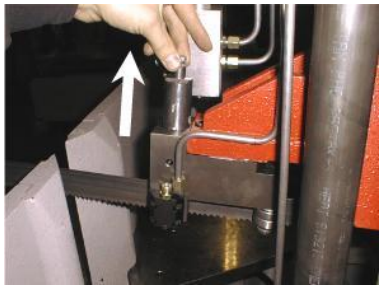

5) Remove the bearing holder from the guiding cube.

6) Insert the pivot to the vice.

ATTENTION!! The vice has aluminium jaws, eventually, there has to be an aluminium agent to protect the pivot from damage.

Remove the bearing pivot from the bearing holder by means of the swager.

7) Remove the worn bearing.

8) Fasten the holder to the vice.

ATTENTION!! The vice has aluminium jaws, eventually, there has to be an aluminium agent to protect the pivot from damage.

Insert the bearing and washers and return the pivot to its original place.
The pivot may not extend past the holder; otherwise, the bundle gripping assembly regulator gets worse.

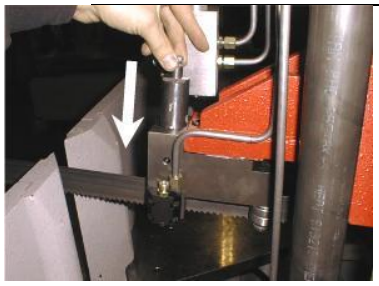

9) Insert the holder to the guiding cubes. Fasten it with pin.

10) Connect the cutting pressure regulation and the hydraulic tube. Bearing replacement is ended.

20.2. Saw band guiding pulleys replacement

If the saw band is not sufficiently guided by guiding pulleys or if the pulleys are obviously worn, the pulleys should be replaced.

ATTENTION! Guiding pulleys must be replaced together on both guiding cubes!

1) Dismantle the saw band.

2) Disconnect the hose from the cooling agent, screw off the cutting pressure regulation.
Let the cutting pressure regulation connected to the hydraulic system.
Dismantle the guiding cube of the saw band.

3) Tighten the guiding cube to the vice and dismantle both eccentrics with bearings following way.

ATTENTION! Mark both eccentrics placing and components on the eccentric! Eccentrics must not be replaced with each other!

4) Screw off nuts from eccentrics.

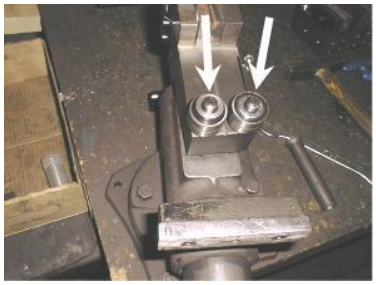

5) Remove eccentrics from bearings by means of the swager.

6) Change all bearings and other worn parts.

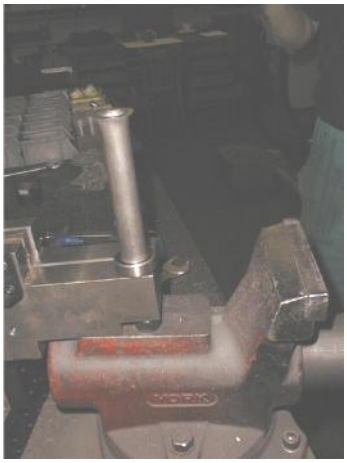

7) Install eccentrics to the cubes. Install components on both eccentrics in given order. Put bearings by means of the preparation on eccentrics.

ATTENTION! Do not replace the eccentrics placing in the cube.

8) Screw on nuts on both eccentrics and tighten them.

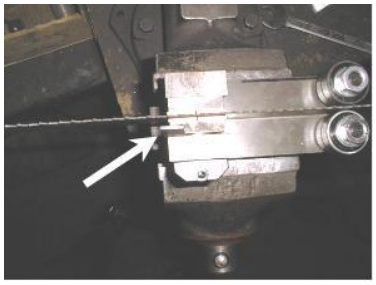

9) Insert the saw band to the guiding cube (cca 15 – 20 cm). Secure the movable hard metal guide with scotch so, that the saw band is pressed with guides and it is possible to move with saw band.

10) Set the eccentrics by means of the wrenches, the saw band must run in the centre. Guide pulleys must not press too much on the band, but must spin freely during the band run.
Optimal distance between the band and the pulley is 0,05 mm.

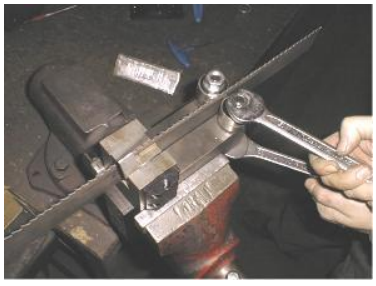

11) Tighten nuts on both eccentrics.

12) Remove the testing piece of saw band from the cube lead. Install the guiding cube on the machine and connect the cutting pressure regulation to the cut and cooling. Install the saw band.

20.3. Hard metal guides replacement

If the hard metal guides cannot be adjusted, they have to be replaced. **ATTENTION!** Hard metal guides must be replaced together on both guiding cubes!

1) Dismantle the saw band.

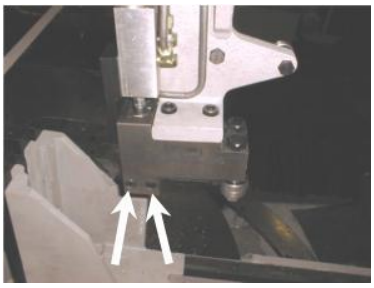

2) Dismantle the fixed hard metal guide.

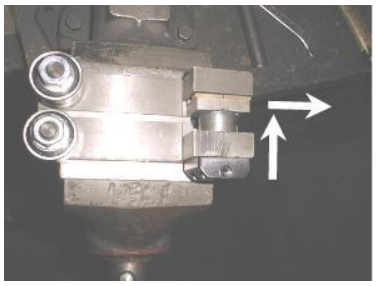

3) Remove the movable hard metal guide.

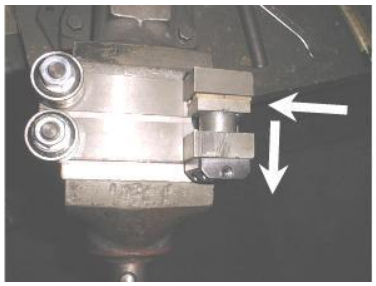

4) Insert the new movable hard metal guide.

5) Screw on the fixed hard metal guide.

6) Deaerate the hydraulic circuit of the hard metal guide. Switch on the machine, hydraulic unit and saw band drive.

7) Release the screw and let to escape the air from the circuit. Catch the oil to the bath. Close the screw.

ATTENTION! Work with safety, because you can injure about the saw band!

8) Hard metal guides replacement is ended.

20.4. Round brush replacement

If the chip removing brush is so worn, that it does not fulfil its function, the brush must be replaced.

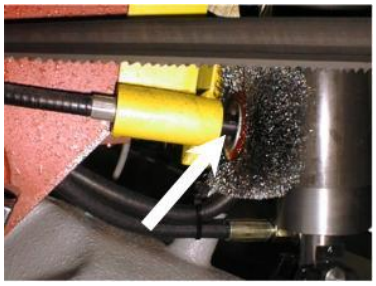

1) Hold brush shaft by key.

2) Release the nut of the brush, exchange old brush to new brush and screw on the nut of the brush.

3) Set the brush to the saw band.

21. Rozměrové schéma / Aufstellzeichnung / Installation diagram

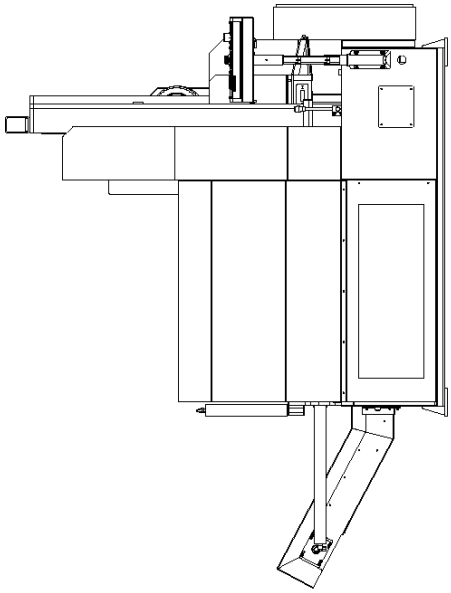

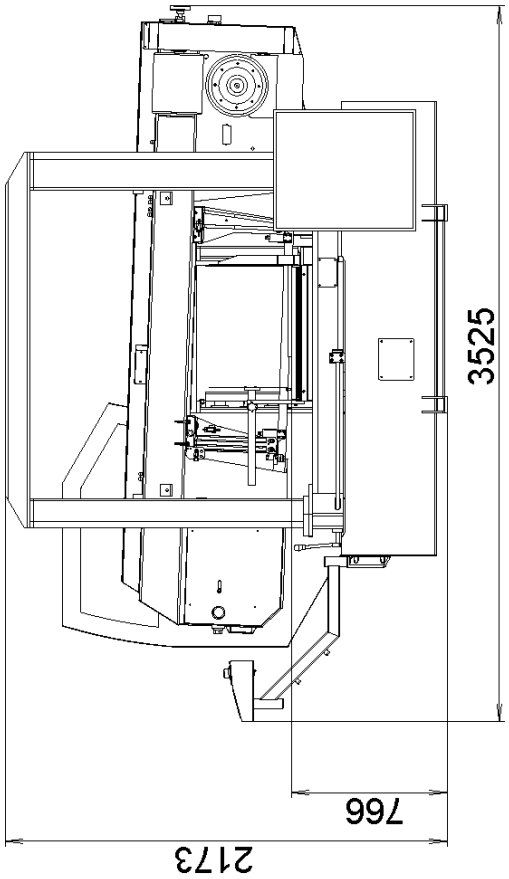

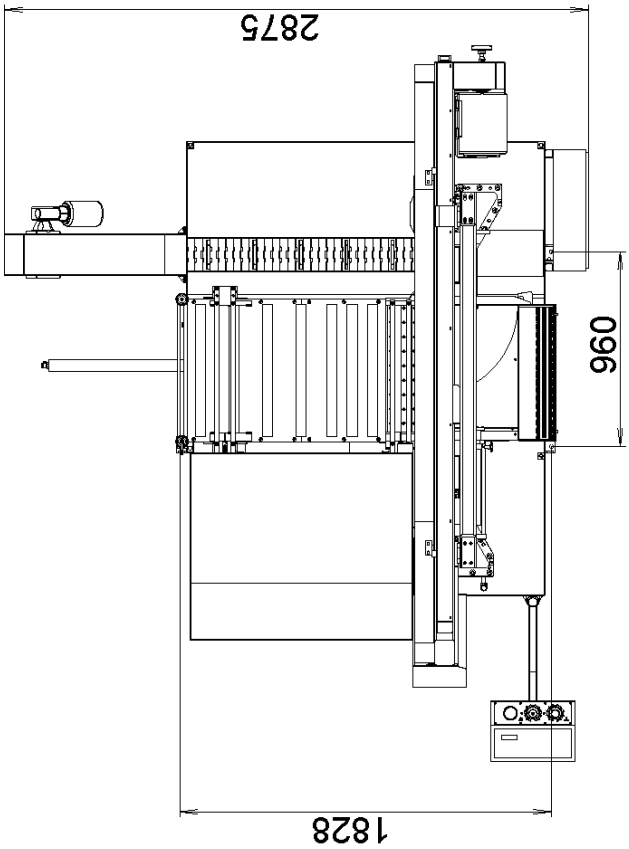

Rozměrové schéma / Aufstellzeichnung / Installation diagram

22. Elektrická schémata / Elektroschemas / Wiring diagrams

BOMAR, spol. s r.o.
Těžební 1236/1
62700 Brno
CZECH REPUBLIC

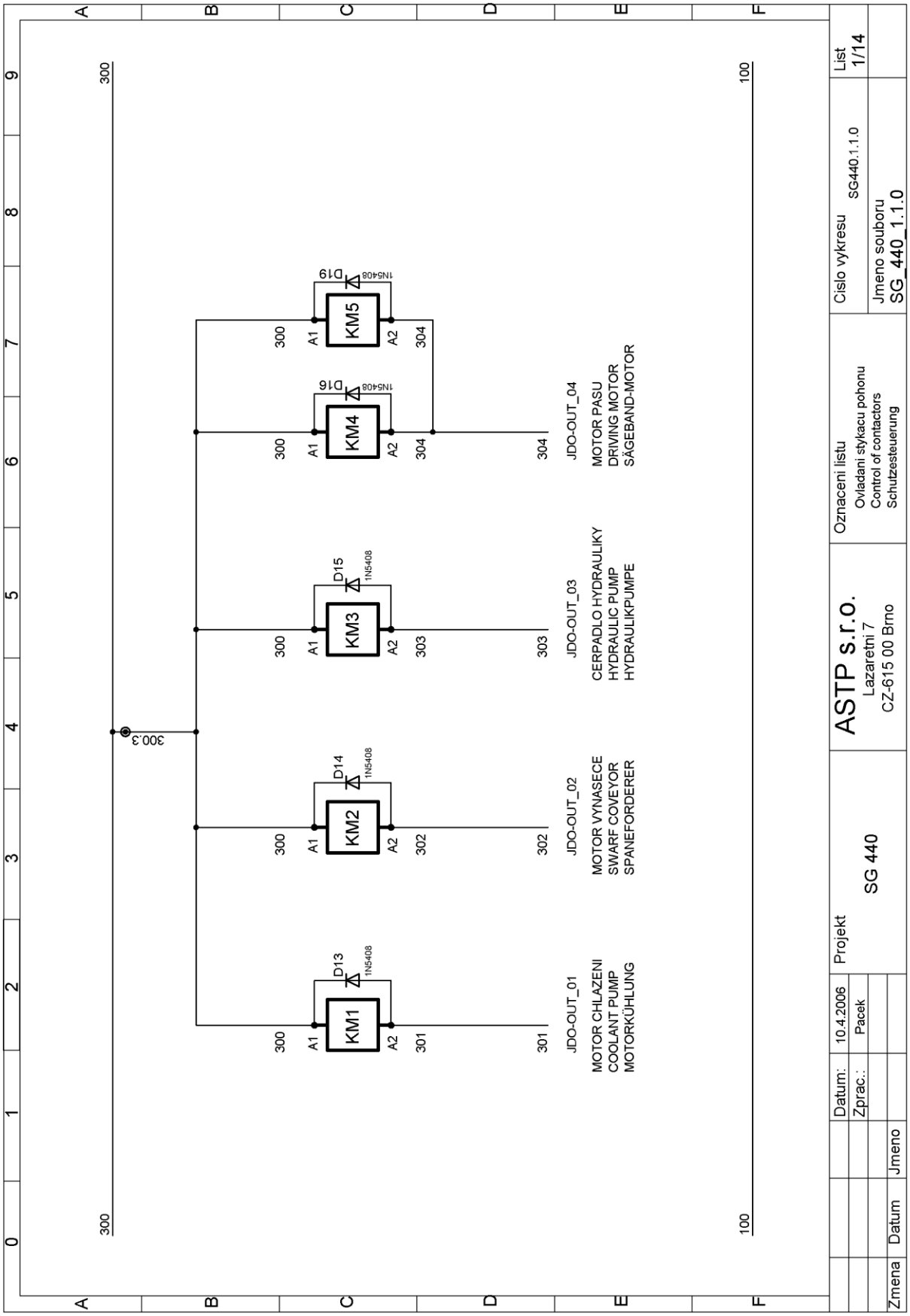

Elektrické schéma 1 / Elektroschema 1 / Wiring diagram 1

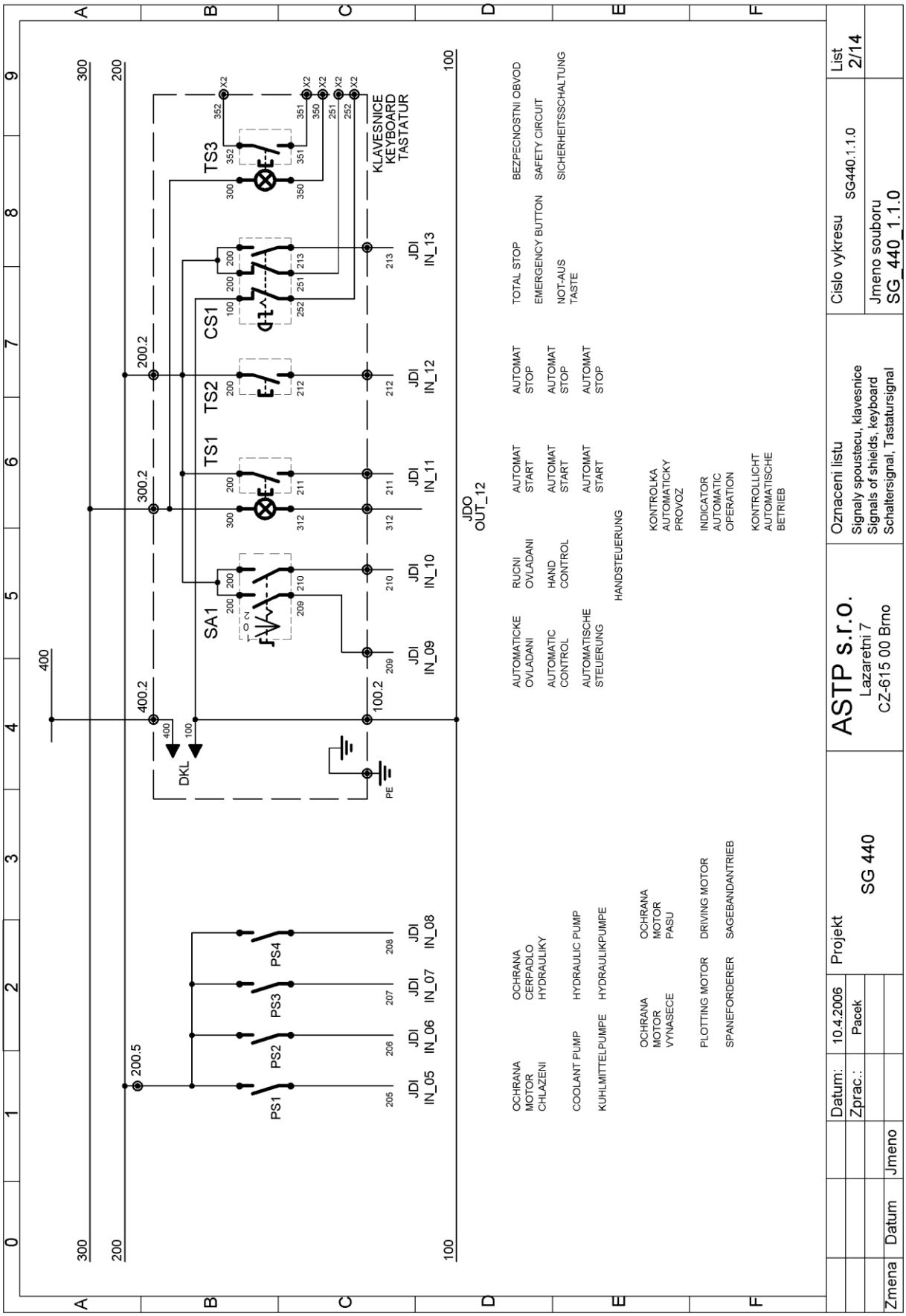

Elektrické schéma 2 / Elektroschema 2 / Wiring diagram 2

BOMAR, spol. s r.o.
Těžební 1236/1
62700 Brno
CZECH REPUBLIC

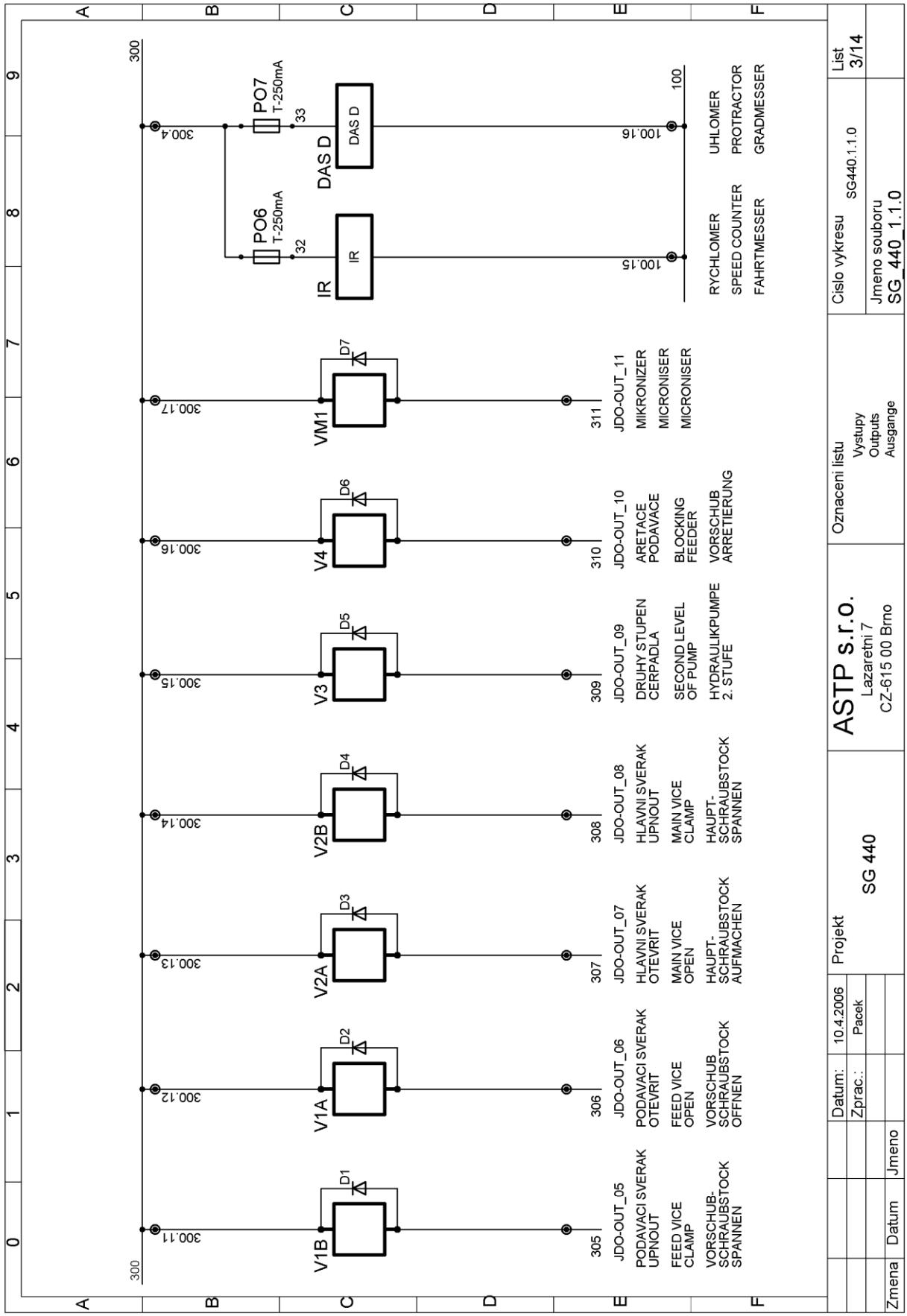

Elektrické schéma 3 / Elektroschema 3 / Wiring diagram 3

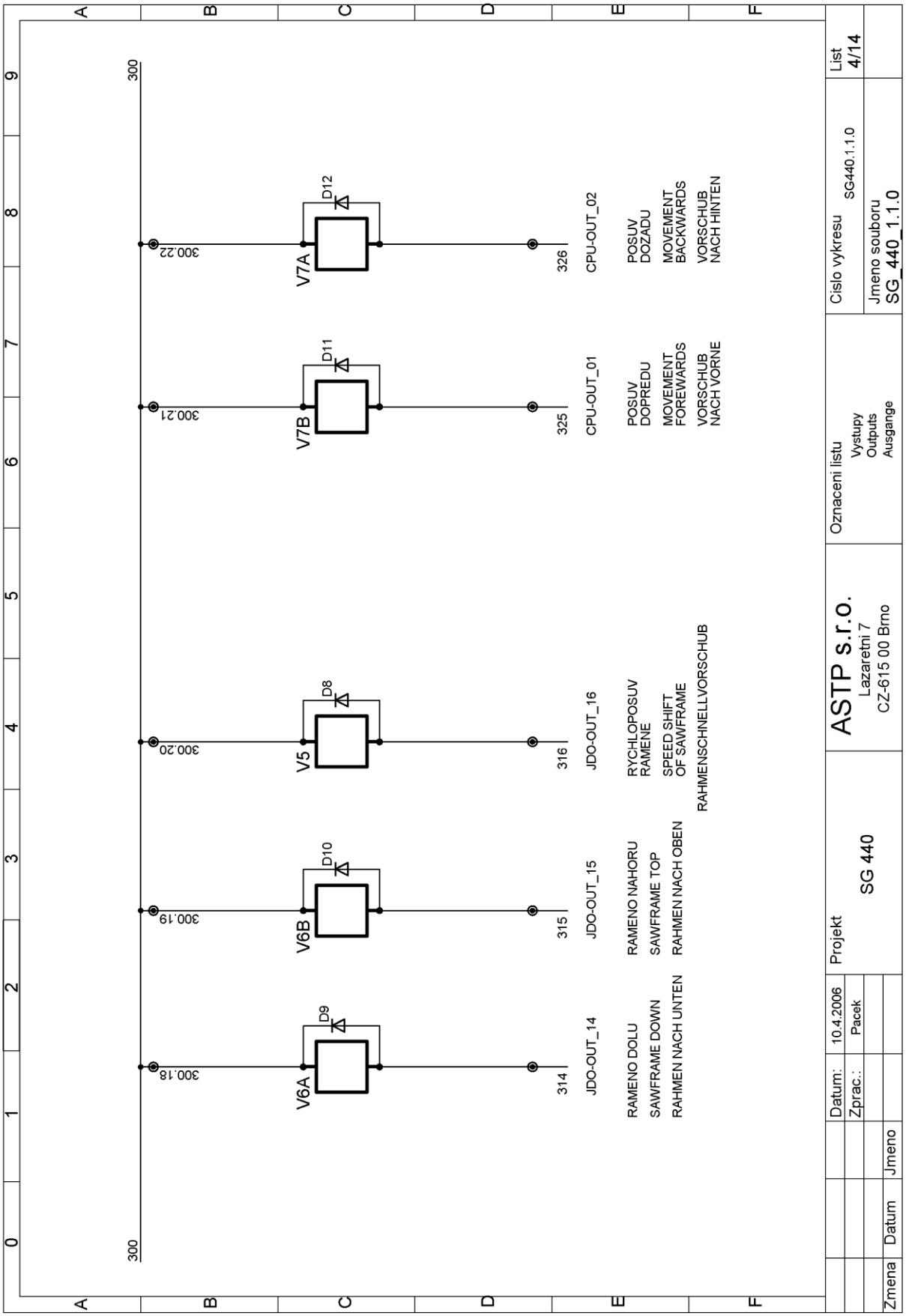

Elektrické schéma 4 / Elektroschema 4 / Wiring diagram 4

BOMAR, spol. s r.o.
Těžební 1236/1
62700 Brno
CZECH REPUBLIC

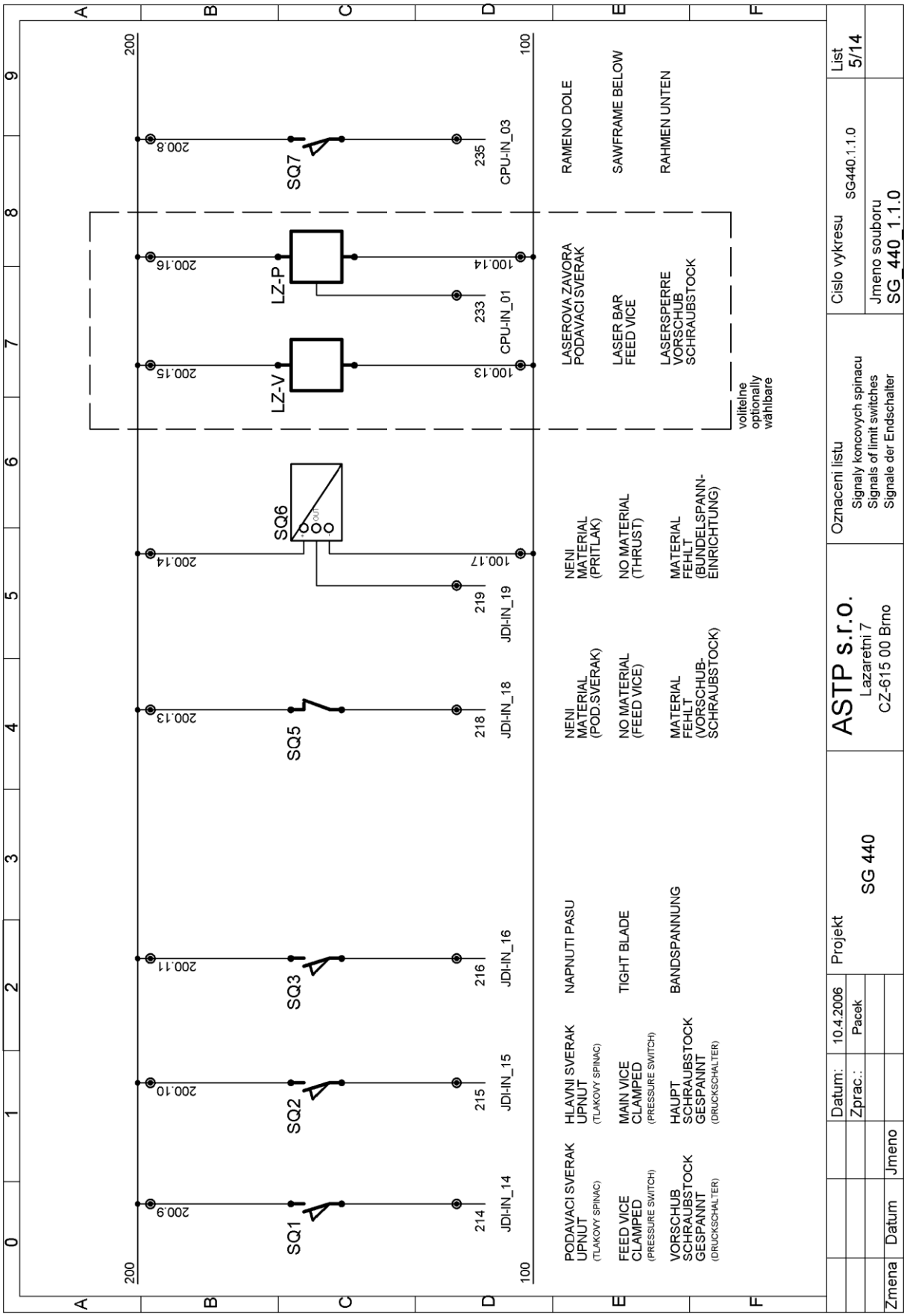

Elektrické schéma 5 / Elektroschema 5 / Wiring diagram 5

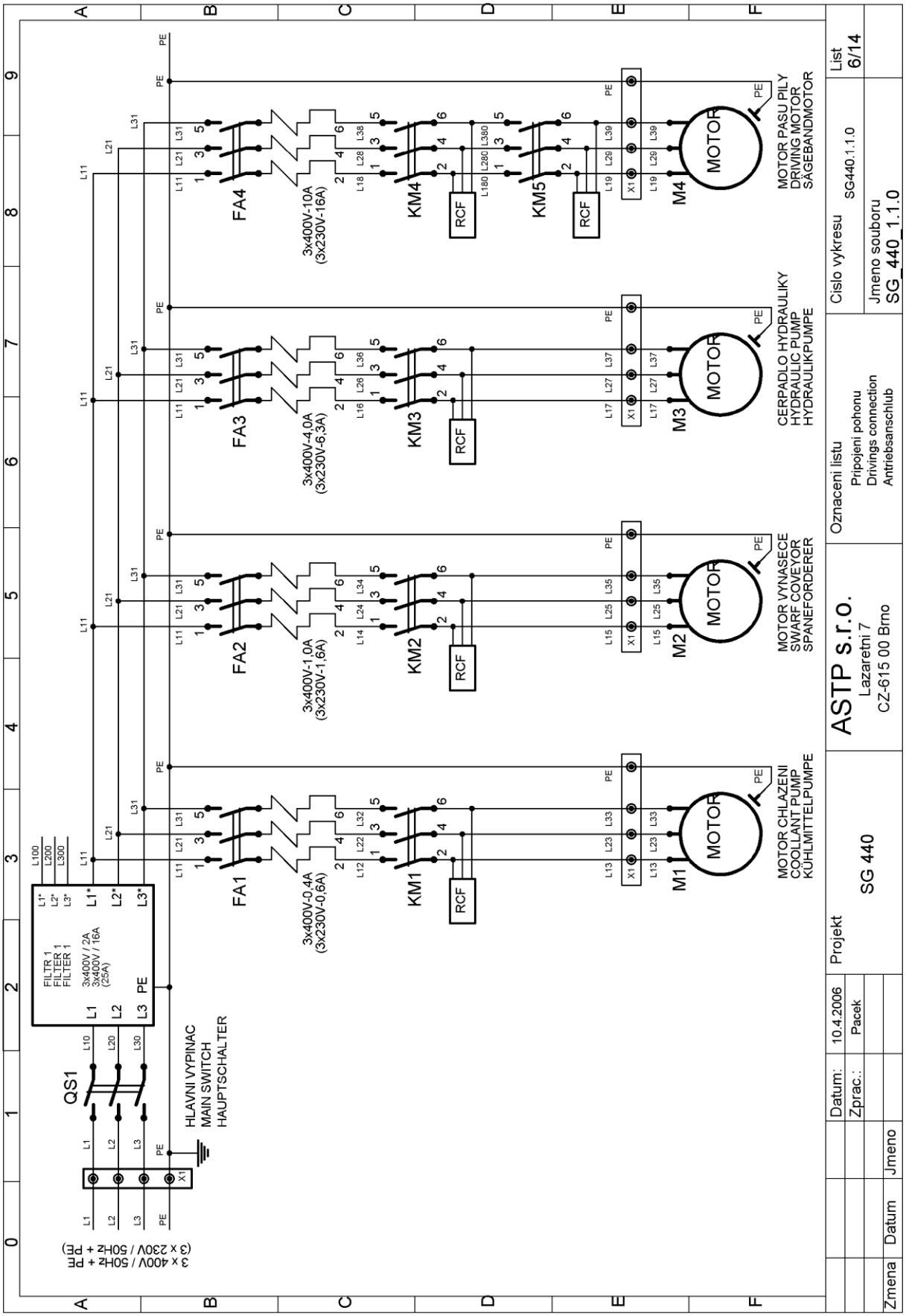

Elektrické schéma 6 / Elektroschema 6 / Wiring diagram 6

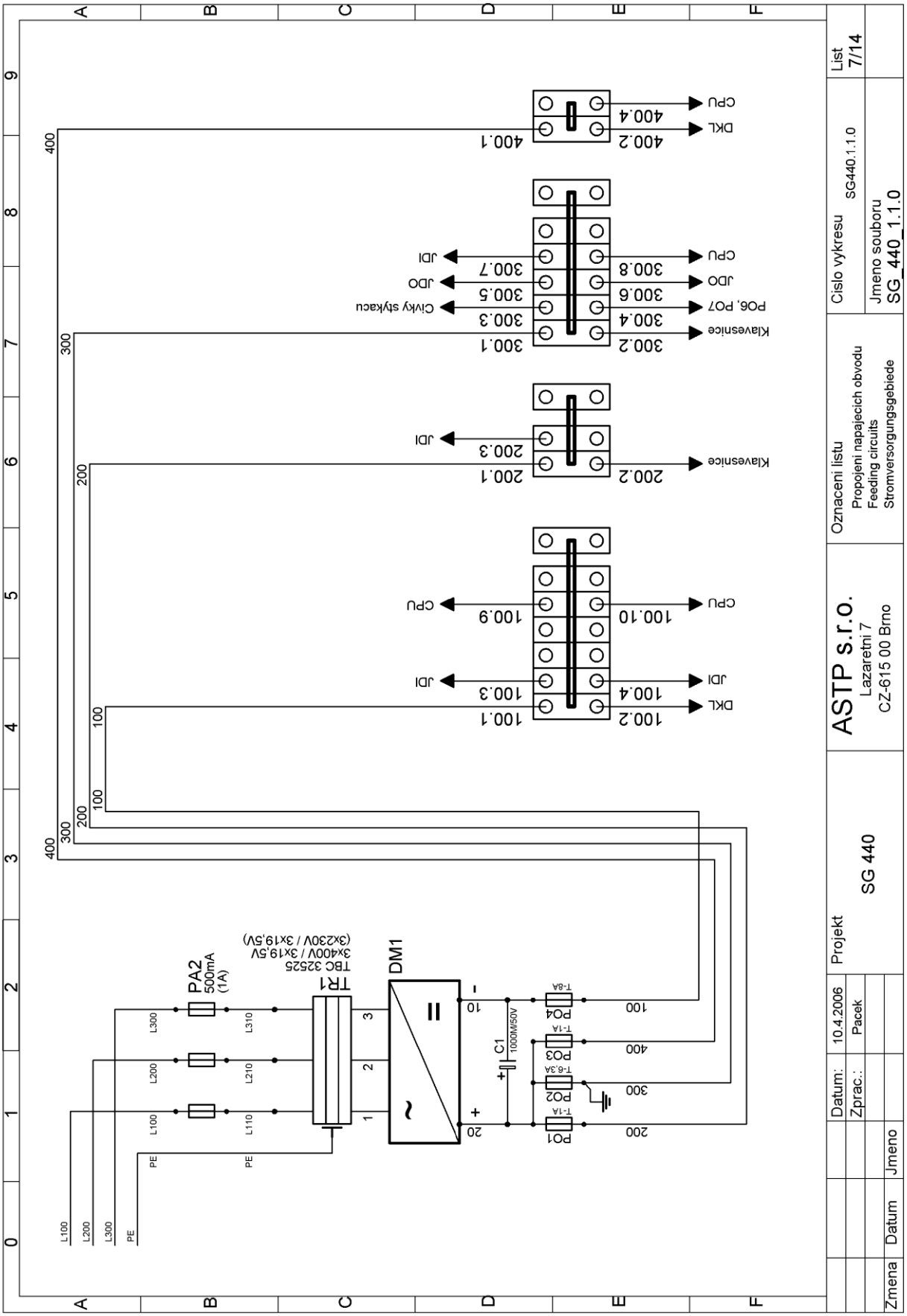

Elektrické schéma 7 / Elektroschema 7 / Wiring diagram 7

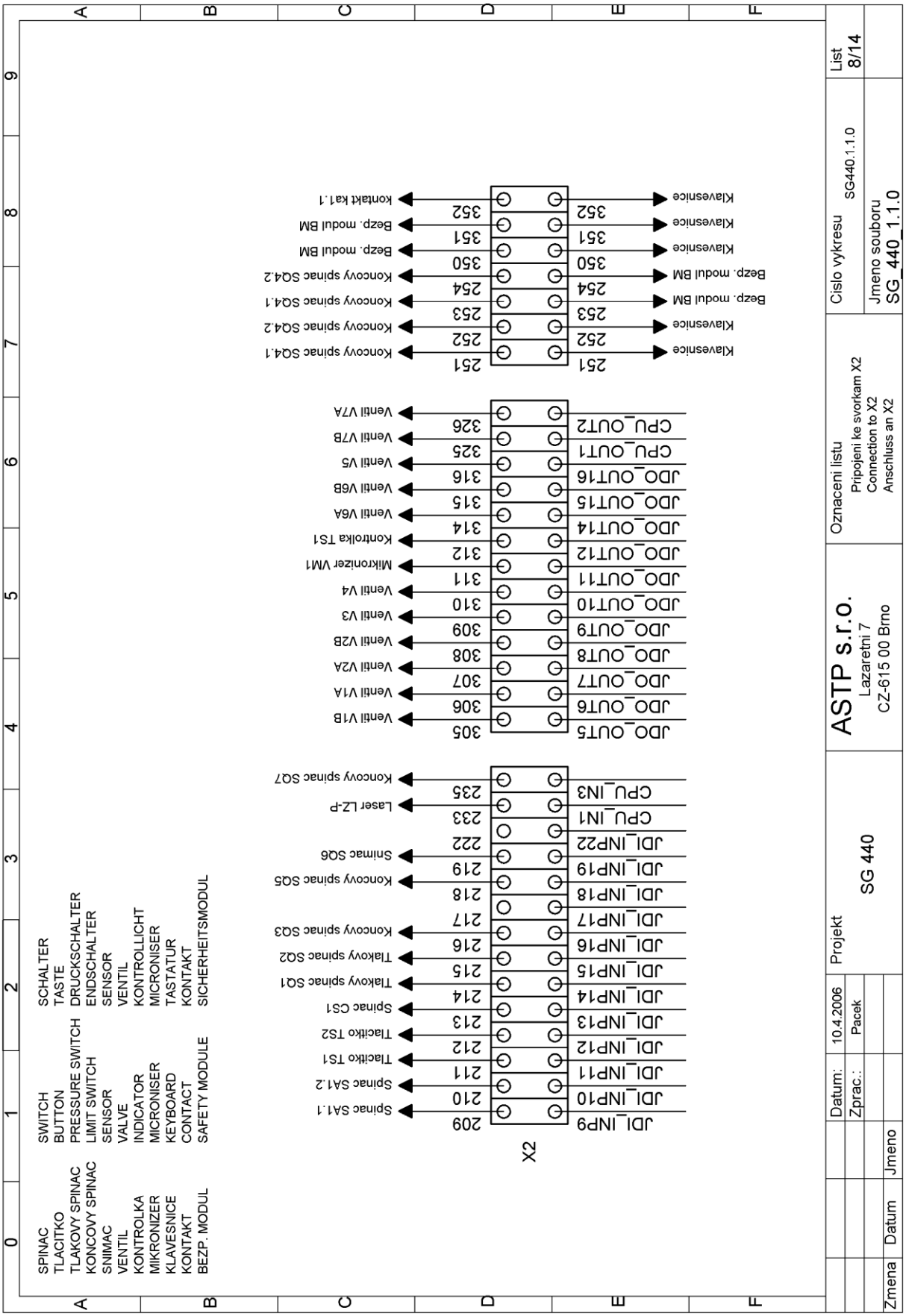

Elektrické schéma 8 / Elektroschema 8 / Wiring diagram 8

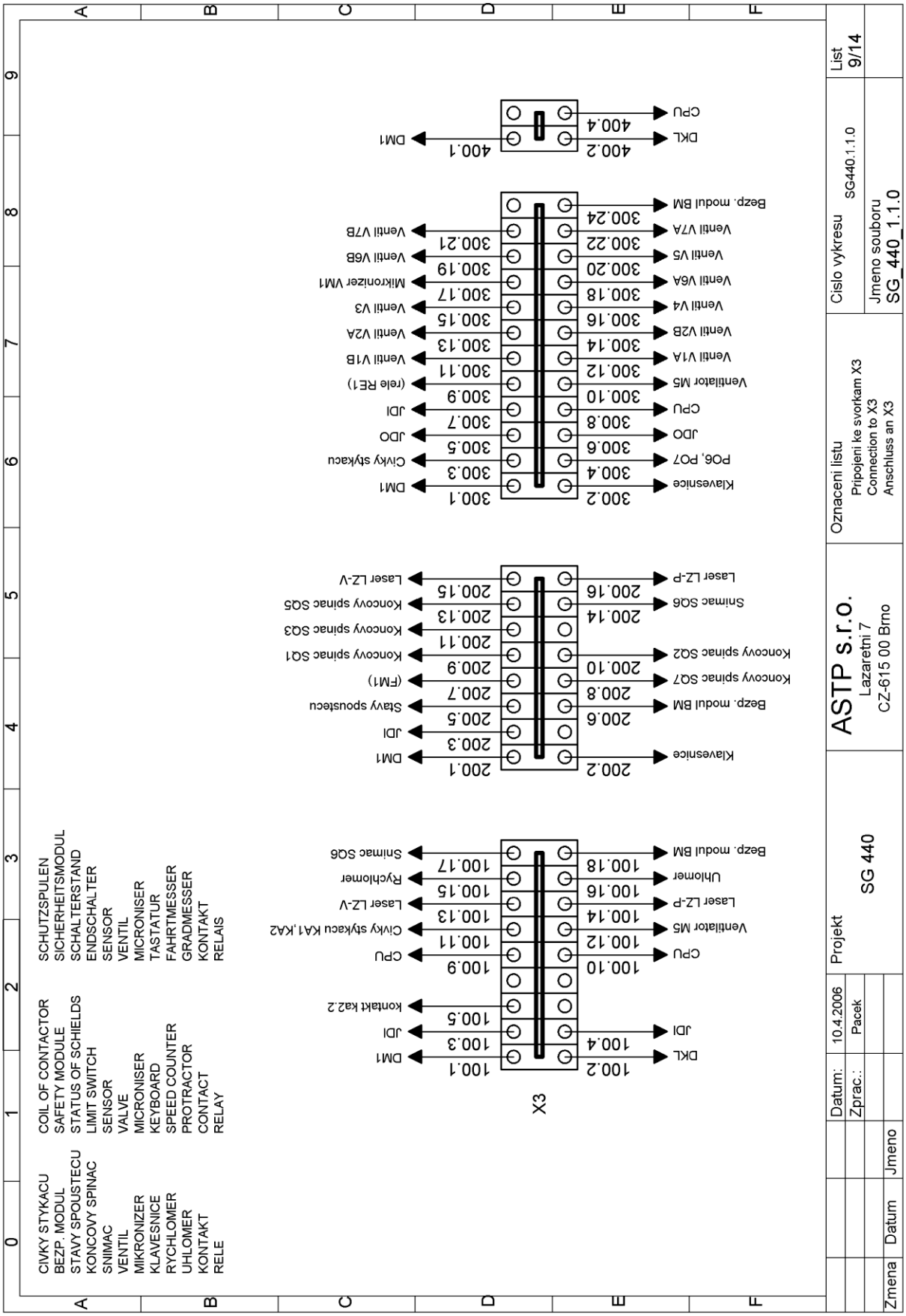

Elektrické schéma 9 / Elektroschema 9 / Wiring diagram 9

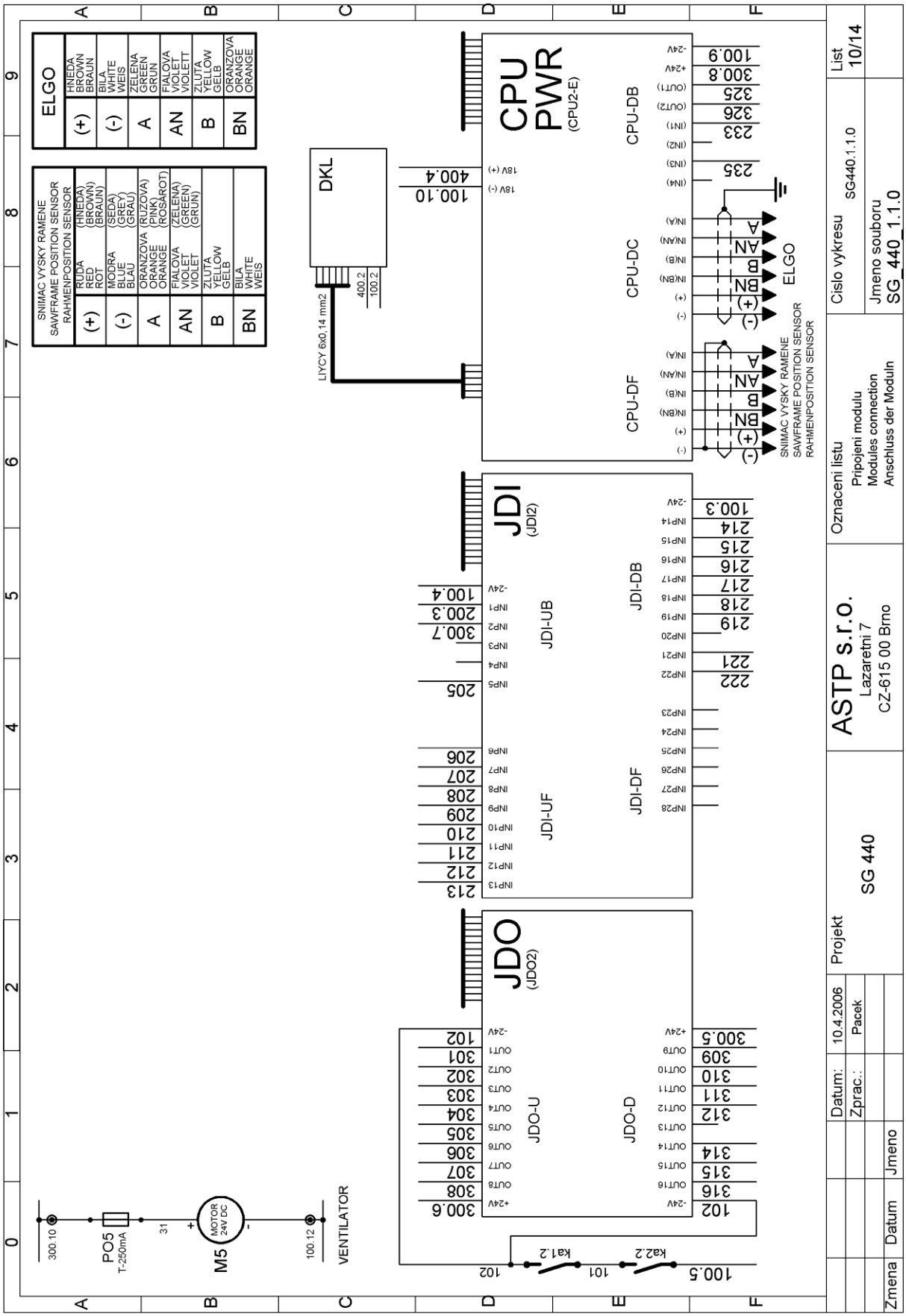

Elektrické schéma 10 / Elektroschema 10 / Wiring diagram 10

BOMAR, spol. s r.o.
Těžební 1236/1
62700 Brno
CZECH REPUBLIC

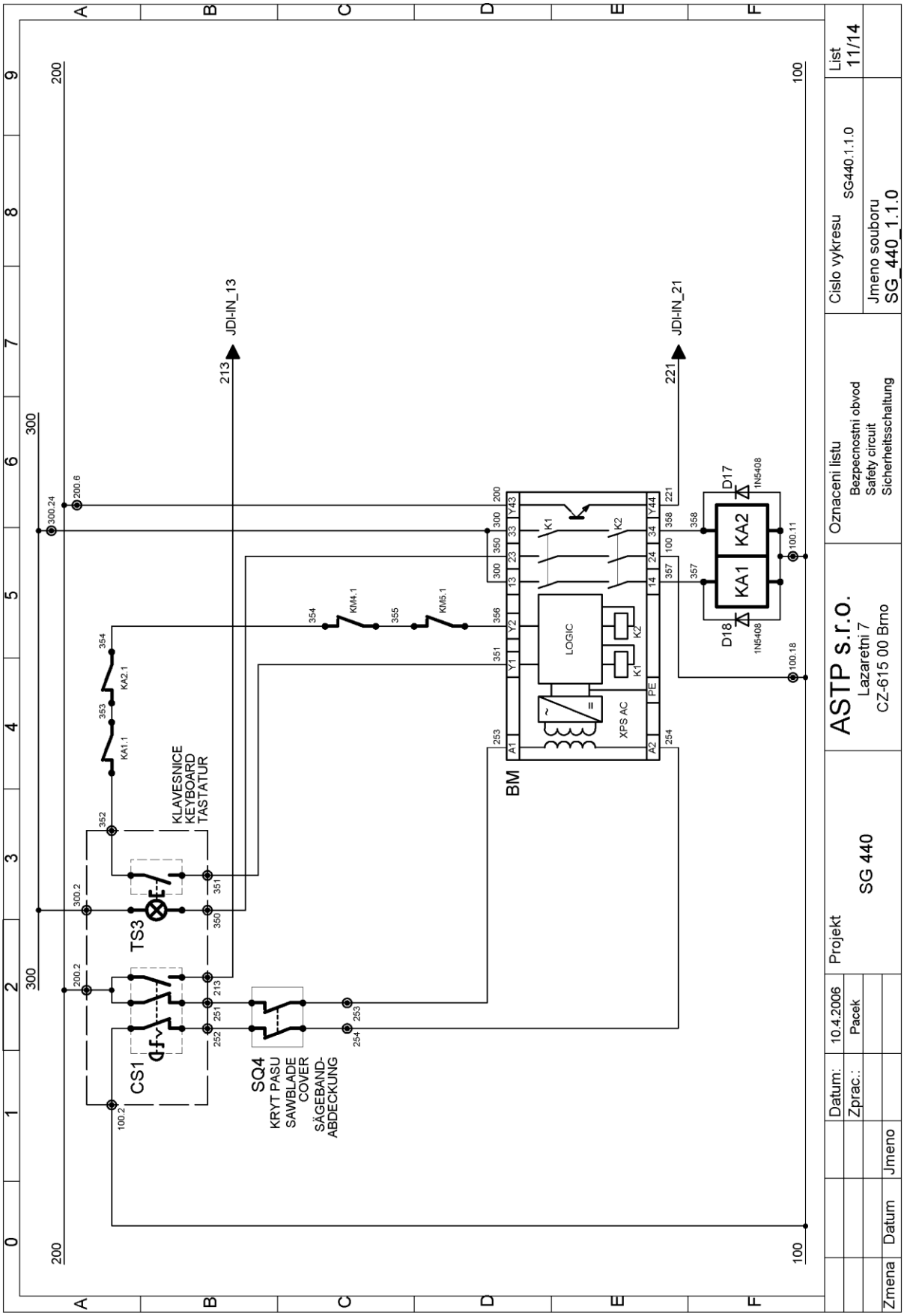

Elektrické schéma 11 / Elektroschema 11 / Wiring diagram 11

Elektrické schéma 12 / Elektroschema 12 / Wiring diagram 12

JDO - Output State Signalization	
16	Activ. high speed move of the arm
15	Put the arm up
14	Put the arm down
13	
12	Switch on the automatic cycle indicator
11	Activate the microniser
10	Lock the feeder
9	Shift the pump into second stage
8	Close the main gripper
7	Open the main gripper
6	Open the feeding gripper
5	Close the feeding gripper
4	Turn on the band motor
3	Turn on the hydraulic pump
2	Turn on the swarf-removal motor
1	Turn on the cooling motor

JDI - Input State Signalization		
	button released	button pushed
16	The sawband is tight	
15	Main gripper is closed	
14	Feeding gripper is closed	
13	Total stop activated	
12	Automatic mode stopped	
11	Automatic mode started	
10	Manual control activated	
9	Automatic control activated	
8	Band motor protection is OK	
7	Hydraulic pump protection is OK	
6	Swarf-removal motor protection is OK	
5	Cooling motor protection is OK	Security circuit is ON
4		
3		Material is present - thrust
2	Voltage on 300 OK	Material is present - feeding gripper
1	Voltage on 200 OK	

CPU - Unit State Signalization	
12	Voltage 5V
11	Voltage 5V-KOM
10	Internal CAN - TXD
9	Internal CAN - RXD
8	External CAN - TXD
7	External CAN - RXD
6	Connection with JDO unit OK
5	Connection with JDI unit OK
4	Laser bar (main gripper) is active
3	Laser bar (feeding gripper) is active
2	Feeder to the back
1	Feeder to the front

			Datum:	30.5.2006	Projekt	ASTP s.r.o.	Oznaceni listu	Cislo vykresu SG440.1.1.0	List 13/14
			Zprac.:	Pacek	SG 440	Lazaretni 7	Description of LED diodes signalization		
Zmena	Datum	Jmeno				CZ-615 00 Brno		Jmeno souboru SG_440_1.1.0	

JDO - Ausgabe - Standanzeige	
16	Eilgang des Sägerahmen aktivieren
15	Sägerahmen heben
14	Sägerahmen senken
13	
12	Kontrolleuchte (automat. Betrieb) aktivieren
11	Microniser aktivieren
10	Vorschub arretieren
9	Zweite Stufe der Hydraulikp. aktivieren
8	Hauptschraubstock spannen
7	Hauptschraubstock öffnen
6	Vorschubschraubstock öffnen
5	Vorschubschraubstock spannen
4	Sägebandantrieb einschalten
3	Hydraulikpumpe einschalten
2	Spänförderer einschalten
1	Kühlmittelpumpe einschalten

JDI - Eingabe - Standanzeige		
	Taste gelöst	Taste gedrückt
16	Sägeband gespannt	
15	Hauptschraubstock gespannt	
14	Vorschubschraubstock gespannt	
13	NOT-AUS Taste aktiviert	
12	STOP des automatischen Zyklus	
11	START des automatischen Zyklus	
10	Manuelles Bedienen aktiviert	
9	Automatisches Bedienen aktiviert	
8	Schutz des Sägebandantriebes OK	
7	Schutz der Hydraulikpumpe OK	
6	Schutz des Spänförderers OK	
5	Schutz der Kühlmittelpumpe OK	Sicherheitsschaltung verbunden
4		
3		Material anwesend - Bündelspanneinrich.
2	Versorgung an 300 OK	Material anwesend - Vorschubschraub.
1	Versorgung an 200 OK	

CPU - Ausgabe - Einheitsstand	
12	Versorgung 5V
11	Versorgung 5V-KOM
10	Intern CAN - TXD
9	Intern CAN - RXD
8	Extern CAN - TXD
7	Extern CAN - RXD
6	Verbindung mit JDO-Einheit OK
5	Verbindung mit JDI-Einheit OK
4	Lasersperre (Hauptschraubstock) aktiv
3	Lasersperre (Vorschubschraubstock) aktiv
2	Vorschub nach hinten
1	Vorschub nach vorne

Elektrické schéma 14 / Elektroschema 14 / Wiring diagram 14

23. Kusovník elektrosoučástí / Stückliste der Elektroteilen / Piece list of elektroparts

ATTENTION! Only qualified person can do the servicing and repairs. For parts changing, use only parts, which are identical with the originals.

Bestell - Nr.	**Bezeichnung**		**Menge**	**Sign.**
Objednací číslo	**Název položky**		**ks**	**Ozn.**
Reference No.	**Item**		**Pcs.**	**Sign.**
91.280.002	Diodový můstek/ Diodenbrücke / Diode bridge	DB 25A 280V	1	DM1
91.080.022	Transformator / Transformator / Transformator	TBC-32525-019	1	TR
91.041.004	Filtr / Filter / Filter	FZ72460	5	RCF
	Stykač / Schütz / Contactor	LP1K0901BD 24Vss	7	KM
91.045.003	Motorový spouštěč / Motor Starter / Motor Starter	MS116-0,4A (ABB)	1	FA3
91.045.005	Motorový spouštěč / Motor Starter / Motor Starter	MS116-1,0A (ABB)	1	FA1
91.045.009	Motorový spouštěč / Motor Starter / Motor Starter	MS116- 6,3 (ABB)	1	FA2
91.045.008	Motorový spouštěč / Motor Starter / Motor Starter	MS116 -4,0A (ABB)	1	FA3
91.046.002	Motorový spouštěč / Motor Starter / Motor Starter	HK1-11(ABB)	1	FA1
91.995.039	Modul / Modul / Modul	JDI-2/2	1	JDI
91.995.040	Modul / Modul / Modul	JDO-2	1	JDO
91.995.048	Modul / Modul / Modul	DKL-F5	1	DKL
91.995.060	Modul / Modul / Modul	CPU2-E	1	CPU

24. Hydraulické schéma / Hydraulikschema / Hydraulic diagram

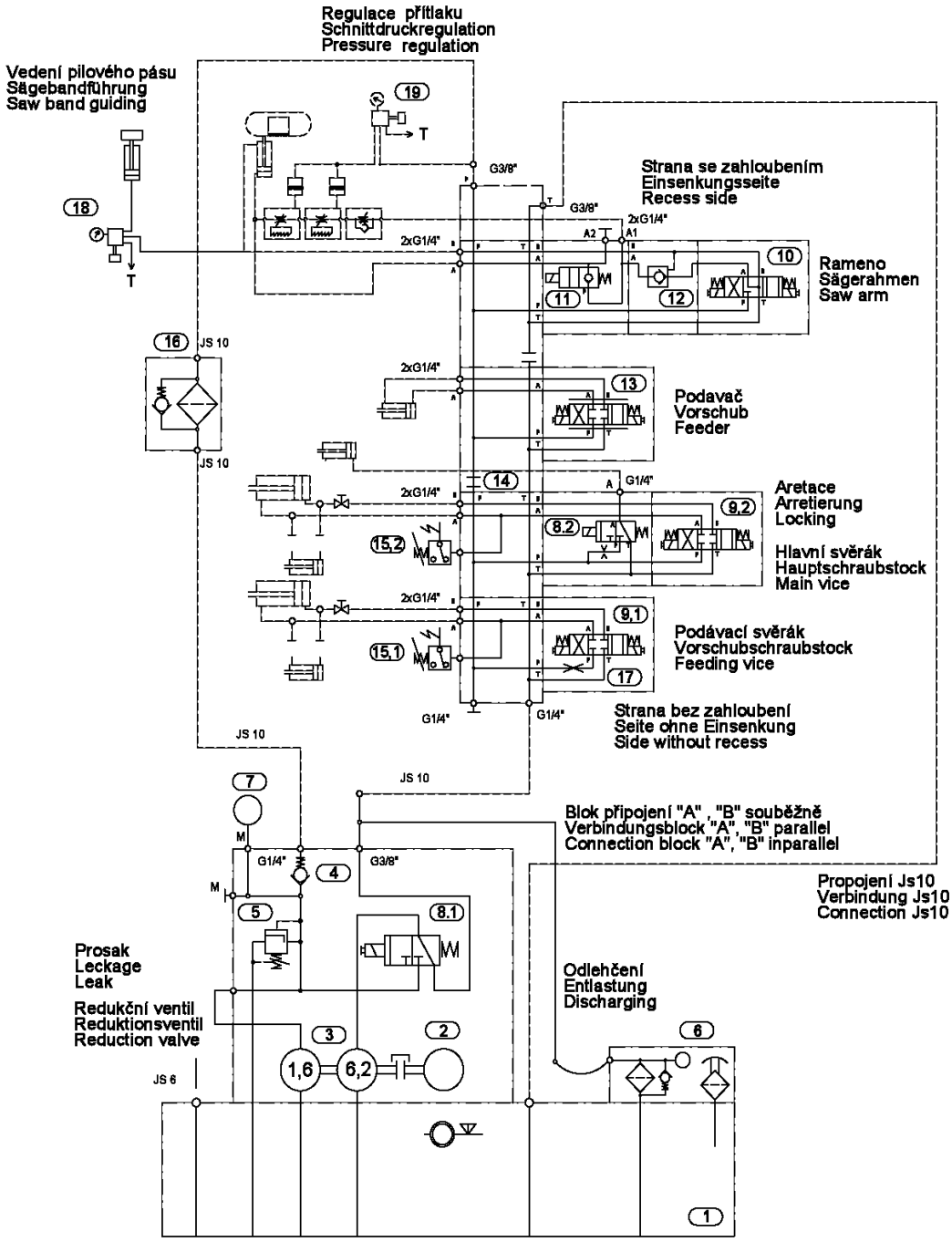

Základní technické parametry:
Technische Spezifikation:
Technical specification:

Q	8+2,1	$dm^3 \cdot min^{-1}$	ot.	1410	min^{-1}
p_{max}	4,0	MPa	P	1,1	kW

Hydraulické schéma: Hydraulikschema: Hydraulic diagram:	**870-1383**	Schéma / Schema / Diagram: 8701383C.DWG Datum / Datum / Date: 28.5. 2003

Poz.	Název položky		ks
Pos.	Bezeichnung		Menge
Pos.	Item		Pcs.
1	Nádrž / Behälter / Tank	N20 - BO	1
2	Elektromotor / Elektromotor / Electromotor	MA-AL90S-4	1
3	Hydrogenerátor / Hydraulikaggregat / Hydrogenerator	P2-6,2/1,6L.66313	1
4	Jednosměrný ventil / Einwegventil / One-way valve	VJO1-06/SG-1	1
5	Přepouštěcí ventil / Bypaßventil / By-pass valve	VPP2-04/S-6S	1
6	Zpětný filtr / Filter / Filter	FR 043-166/0 + DG200-06	1
	Vložka ve filtru / Filtereinsatz / Filter inset	V3.0510-56	1
7	Manometr / Manometer / Manometer	0-10 MPa	1
8	Rozváděč / Verteilung / Distributor	ROX1-042D21/02400E1K1	2
9	Rozváděč / Verteilung / Distributor	RPE3-043Z11/02400E1K1	2
10	Rozváděč / Verteilung / Distributor	RPE3-043Y11/02400E1K1	1
11	Blok rychloposuvu / Eilgangsblock / Speed shift block	729-0084	1
12	Hydraulický zámek / Hydraulisches Schloß / Hydraulic lock	VJR1-04/MA	1
13	Proporcionální rozvaděč / Wege-Proportionalventil / Proportional distributor	PRM2-043Z11/04-24 MIKRO	1
14	Zátka / Stopfen / Stopper	M6	1
15	Tlakový spínač / Druckschalter / Pressure switch	SUCO 0166 411 031 043	2
16	Tlakový filtr / Druckfilter / Pressure filter	D 042-153	1
	Vložka ve filtru / Filtereinsatz / Filter inset	V3.0510-03	1
17	Tryska / Düse / Nozzle	Ř1,5	1
18	Vedení pilového pásu / Sägebandführung / Saw band guiding		1
19	Regulace přítlaku / Schnittdruckregulation / Pressure regulation		1

Označení hydraulických hadiček / Bezeichnung der hydraulischen Schlauche /Indication of hydraulic hose:

Hydr. hadice	Hadice	Kování	Konc. A	Konc. B	Konc. C	Konc D	Konc. E	Konc. F	Kon. G	Ks
Hydr. Schlauche	Schlauche	Schmieden	Schlauchtüle A	B	C	D	E	F	G	Menge
Hydr. Hose	hose	forging	terminal A	B	C	D	E	F	G	piece
6AA1500	42.001.001	92.051.001	92.052.001	-	-	-	-	-	-	1
6AE2700	42.001.001	92.051.001	92.052.001	-	-	-	93.012.004	-	-	1
6AA7300	42.001.001	92.051.001	92.052.001	-	-	-	-	-	-	1
6AE8600	42.001.001	92.051.001	92.052.001	-	-	-	93.012.004	-	-	1
6BA32500	42.001.001	92.051.001	92.052.001	92.053.001	-	-	-	-	-	1
6BA7300	42.001.001	92.051.001	92.052.001	92.053.001	-	-	-	-	-	1
6AA950	42.001.001	92.051.001	92.052.001	-	-	-	-	-	-	2
6AA1650	42.001.001	92.051.001	92.052.001	-	-	-	-	-	-	1
6AA1200	42.001.001	92.051.001	92.052.001	-	-	-	-	-	-	3
6AA1830	42.001.001	92.051.001	92.052.001	-	-	-	-	-	-	1
6AA700	42.001.001	92.051.001	92.052.001	-	-	-	-	-	-	1
6AE8600	42.001.001	92.051.001	92.052.001	-	-	-	93.012.004	-	-	1
10BA800	42.003.001	92.051.003	92.052.002	92.053.002	-	-	-	-	-	1
10BB1200	42.003.001	92.051.003	-	92.053.002	-	-	-	-	-	1
10BA1400	42.003.001	92.051.003	-	92.053.002	-	-	-	-	-	
3AA900	42.004.001	92.051.004	92.052.003	-	-	-	-	-	-	1
3AA900	42.004.001	92.051.004	92.052.003	-	-	-	-	-	-	1

3AA1900	42.004.001	92.051.004	92.052.003	-	-	-	-	-	-	1
3AA7100	42.004.001	92.051.004	92.052.003	-	-	-	-	-	-	1
3AA6700	42.004.001	92.051.004	92.052.003	-	-	-	-	-	-	1
3AA3000	42.004.001	92.051.004	92.052.003	-	-	-	-	-	-	1
3AA3900	42.004.001	92.051.004	92.052.003	-	-	-	-	-	-	1
3AA2100	42.004.001	92.051.004	92.052.003	-	-	-	-	-	-	1
3AA1900	42.004.001	92.051.004	92.052.003	-	-	-	-	-	-	1
SDRA										
6BB1450	42.001.001	92.051.001	-	92.053.001	-	-	-	-	-	1
6BB1600	42.001.001	92.051.001	-	92.053.001	-	-	-	-	-	1
6BA1650	42.001.001	92.051.001	92.052.001	92.053.001	-	-	-	-	-	1

BOMAR, spol. s r.o.
Těžební 1236/1
62700 Brno
CZECH REPUBLIC

25. Výkresy sestav pro objednání náhradních dílů / Zeichnungen für Bestellung der Ersatzteile / Drawing assemblies for spare parts order

Při objednávání náhradních dílů vždy uvádějte: typ stroje (např. STG 120), výrobní číslo (např. 125) a rok výroby (např. 1999).

In die Bestellung der Ersatzteile führen Sie immer an: Maschinentyp (z. B. STG 120), Serien Nr. (z. B. 125) und Baujahr (z. B. 1999).

For spare parts order, you must always to allege: type of machine (for example STG 120), serial number (for example 125) and year of construction (for example 1999).

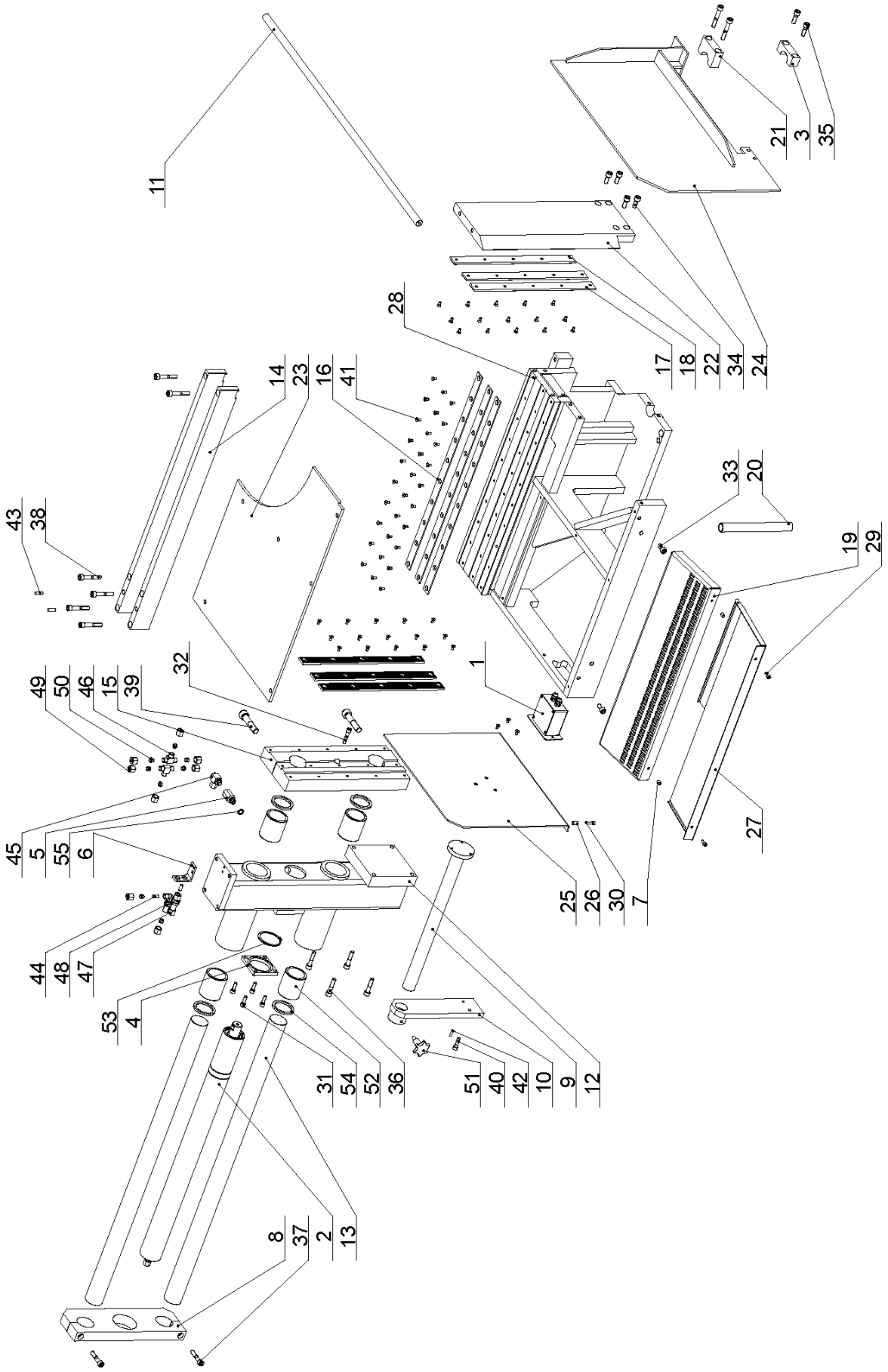

25.1. Hlavní svěrák / Hauptschraubstock / Main vice

Poz.	Objednací číslo	Název položky		ks
Pos.	Bestell - Nr.	Bezeichnung		Menge
Pos.	Reference No.	Item		Pcs.
1	201.2903-100	Displej / Display / Display		1
2	201.4807-000	Upínací válec / Spann cylinder / Clamping cylinder		1
3	30.0809-010	Příložka / Lasche / Splice plate		1
4	30.2011-010	Příložka / Lasche / Splice plate		1
5	30.2011-011	Šroubení / Schraubung / Screwing		1
6	30.2014-011	Držák hadice / Halter / Hose holder		1
7	30.3509-015	Distanční trubka / Distanzrohr / Spacing tube		2
8	30.4009-011	Brýle / Brillen / Glasses		1
9	30.4014-401	Vedení čelisti / Führung / Guiding		1
10	30.4014-403	Konzola / Konsole / Console		1
11	30.4303-021	Tyč odměřování / Abmessungsstange / Measuring bar		1
12	30.4803-002	Sloup / Säule / Pillar		1
13	30.4803-004	Tyč / Stange / Bar		2
14	30.4803-005	Lišta / Leiste / Listel		2
15	30.4803-006	Čelist svěráku / Schraubstockbacke / Vice jaw		1
16	30.4803-008	Třecí deska / Bremsklotz / Frictional plate		3
17	30.4803-010	Lišta / Leiste / Listel		4
18	30.4803-011	Lišta / Leiste / Listel		2
19	30.4803-014	Rošt / Rost / Grate		1
20	30.8603-008	Trubka / Rohr / Tube		1
21	30.8603-015	Příložka / Lasche / Splice plate		1
22	30.8903-003	Čelist svěráku / Schraubstockbacke / Vice jaw		1
23	30.8903-012	Deska / Platte / Plate		1
24	30.8903-014	Pomocná čelist / Hilfsbacke / Auxiliary jaw		1
25	30.8903-016	Pomocná čelist / Hilfsbacke / Auxiliary jaw		1
26	30.8903-017	Distanční trubka / Distanzrohr / Spacing tube		1
27	30.8903-020	Skluz / Rutsch / Slide		1
28	30.8903-201	Svěrák / Schraubstock / Vice		1
29	90.001.25.017	Šroub / Schraube / Screw	M6x16 DIN 912	2
30	90.001.25.018	Šroub / Schraube / Screw	M6x20 DIN 912	1
31	90.001.25.033	Šroub / Schraube / Screw	M8x25 DIN 912	4
32	90.001.25.036	Šroub / Schraube / Screw	M8x40 DIN 912	1
33	90.001.25.046	Šroub / Schraube / Screw	M10x20 DIN 912	2
34	90.001.25.047	Šroub / Schraube / Screw	M10x25 DIN 912	4
35	90.001.25.048	Šroub / Schraube / Screw	M10x30 DIN 912	2
36	90.001.25.051	Šroub / Schraube / Screw	M10x45 DIN 912	4
37	90.001.25.052	Šroub / Schraube / Screw	M10x50 DIN 912	2
38	90.001.25.054	Šroub / Schraube / Screw	M10x60 DIN 912	8
39	90.001.25.093	Šroub / Schraube / Screw	M16x70 DIN 912	2
40	90.001.55.083	Šroub / Schraube / Screw	M8x30 DIN 912	1
41	90.011.27.005	Šroub / Schraube / Screw	M6x12 DIN 7991	63
42	90.300.0Z.005	Válcový kolík / Zylinderstift / Cylindrical pin	6x20 DIN 6325	1
43	90.300.0Z.009	Válcový kolík / Zylinderstift / Cylindrical pin	8x24 DIN 6325	2
44	90.301.0Z.008	Válcový kolík / Zylinderstift / Cylindrical pin	8x20 DIN 7	2
45	92.003.001	Šroubení natáčecí / Winkelverschraubung / swivelling screw	RSWS 08LR	1
46	92.006.001	Propojka / Verbindungsstück / Jumper	TS 8L	2
47	92.008.101	Průchodka přímá / Tülle / Direct grommet	P-GSV 08L	1
48	92.009.001	Průchodka úhlová / Tülle / Angle grommet	WSS 08L M.SKT.M.	1
49	92.013.001	Matice / Mutter / Nut	M 08L	8
50	92.014.001	Těsnící kroužek / Dichtungsring / Sealing ring	P-R 08L/S	8

BOMAR, spol. s r.o.
Těžební 1236/1
62700 Brno
CZECH REPUBLIC

51	94.006.001	Plastový šroub / Plastikschraube / Plastic screw	M8x17	1
52	95.710.002	Kuličkové pouzdro / Kugelbuchse / Bush ball	50x70	4
53	95.800.021	Pojistný kroužek / Sicherungsring / Retaining ring	d62 DIN 471	1
54	96.040.004	Stírací manžeta / Abstreifmanschette / Scraper cup	50x62x5	4
55	96.082.002	Těsnící kroužek / Dichtungsring / Sealing ring	13/17	1

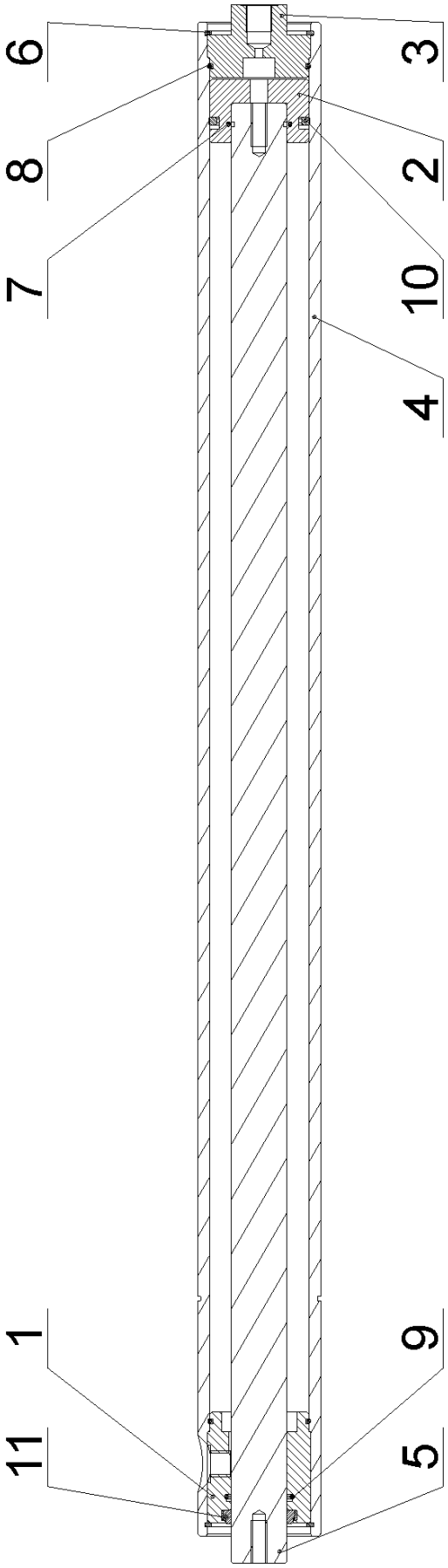

25.2. Upínací válec svěráku / Spannzylinder des Schraubstockes / Vice clamping cylinder

Poz.	Objednací číslo	Název položky	ks
Pos.	**Bestell - Nr.**	**Bezeichnung**	**Menge**
Pos.	**Reference No.**	**Item**	**Pcs.**
1	30.1807-104	Přívod / Zufuhr / Inflow	1
2	30.2007-302	Píst / Kolben / Piston	1
3	30.2007-304	Víko / Deckel / Cover	1
4	30.4807-001	Válec svěráku / Zylinder / Vice cylinder	1
5	30.4807-002	Pístnice / Kolbenstange / Piston rod	1
6	95.801.009	Pojistný kroužek / Sicherungsring / Retaining ring d52 DIN 472	2
7	96.001.008	O-kroužek / O Ring / O Ring 26x2	1
8	96.001.013	O-kroužek / O Ring / O Ring 45x2	2
9	96.002.014	O-kroužek / O Ring / O Ring 28x3	1
10	96.020.005	Q-kroužek / Q Ring / Q Ring 4326A 39.2x5.33	1
11	96.040.003	Stírací kroužek / Abstreifring / Scraper cup 40x52x5	1

BOMAR, spol. s r.o.
Těžební 1236/1
62700 Brno
CZECH REPUBLIC

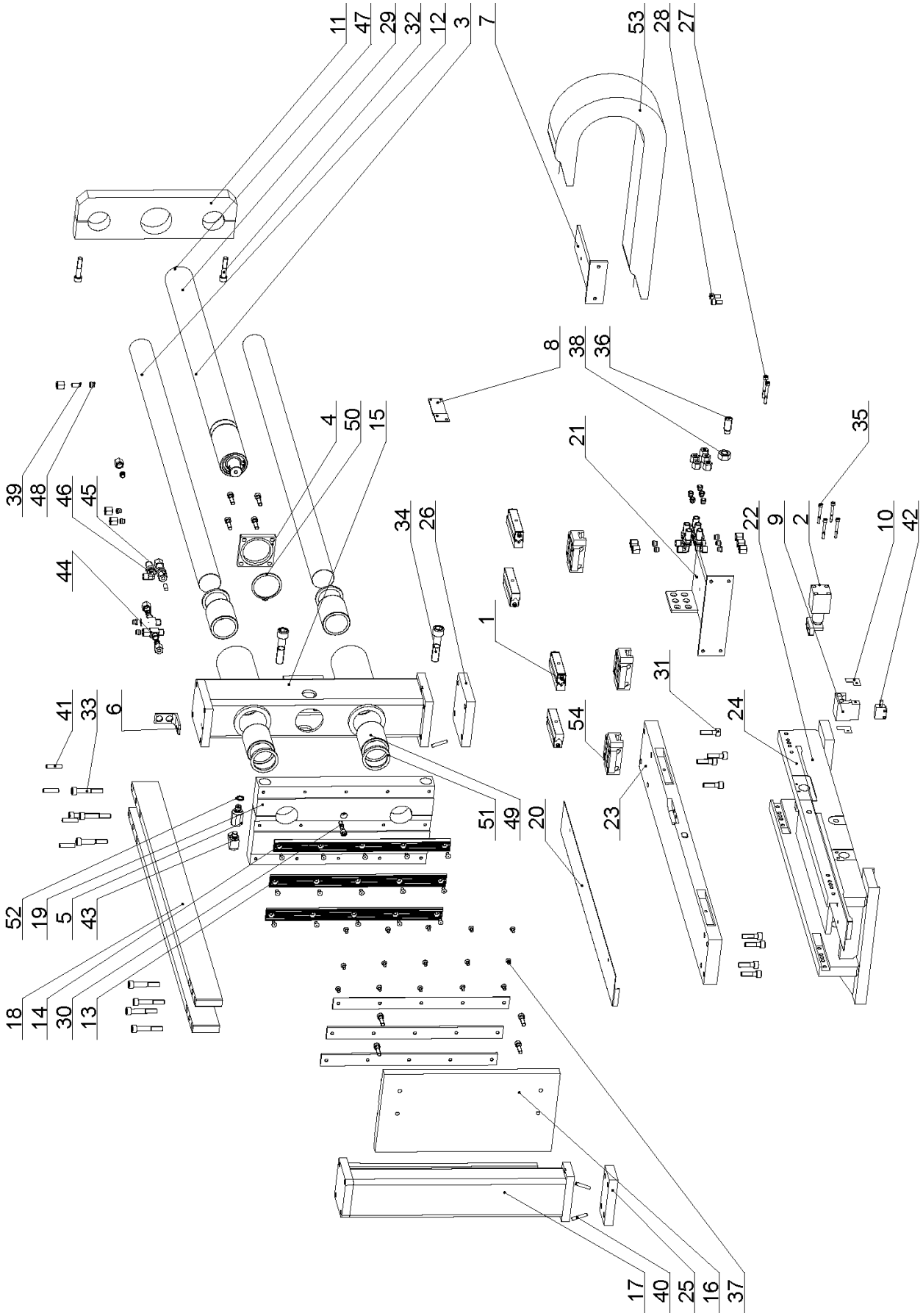

25.3. Podávací svěrák / Vorschubschraubstock / Feeding vice

Poz.	Objednací číslo	Název položky		ks
Pos.	Bestell - Nr.	Bezeichnung		Menge
Pos.	Reference No.	Item		Pcs.
1	201.2911-200	Válečkový element / Zylinderelement / Cylindrical element		4
2	201.4307-500	Fixační válec / Zylinder / Fixative cylinder		1
3	201.4807-000	Válec svěráku / Zylinder / Vice cylinder		1
4	30.2011-010	Příložka / Lasche / Splice plate		1
5	30.2011-011	Šroubení / Schraubung / Screwing		1
6	30.2014-011	Držák hadice / Halter / Hose holder		1
7	30.2911-026	Konzola / Konsole / Console		1
8	30.2911-028	Držák koncového spínače / Endschalterhalter / Limit switch holder		1
9	30.2911-029	Držák snímače / Halter / Holder		1
10	30.2911-030	Stěrač / Abstreifer / Scraper		2
11	30.4009-011	Brýle / Brillen / Glasses		1
12	30.4803-004	Tyč / Stange / Bar		2
13	30.4803-010	Lišta čelisti / Leiste / Listel		4
14	30.4803-011	Lišta čelisti / Leiste / Listel		2
15	30.4811-002	Sloup / Säule / Pillar		1
16	30.4811-004	Čelist / Backe / Jaw		1
17	30.4811-007	Sloup / Säule / Pillar		1
18	30.4811-010	Lišta / Leiste / Listel		2
19	30.4811-022	Čelist / Backe / Jaw		1
20	30.4811-024	Kryt / Deckel / Cover		1
21	30.8911-027	Konzola / Konsole / Console		1
22	30.8911-310	Vozík / Wagen / Carriage		1
23	30.8911-311	Základna / Grundlage / Base		1
24	30.8911-312	Kryt / Deckel / Cover		1
25	30.8911-313	Podložka / Scheibe / Washer		1
26	30.8911-314	Podložka / Scheibe / Washer		1
27	90.001.25.023	Šroub / Schraube / Screw	M6x50 DIN 912	2
28	90.001.25.031	Šroub / Schraube / Screw	M8x16 DIN 912	2
29	90.001.25.034	Šroub / Schraube / Screw	M8x30 DIN 912	8
30	90.001.25.036	Šroub / Schraube / Screw	M8x40 DIN 912	1
31	90.001.25.049	Šroub / Schraube / Screw	M10x35 DIN 912	8
32	90.001.25.052	Šroub / Schraube / Screw	M10x50 DIN 912	2
33	90.001.25.054	Šroub / Schraube / Screw	M10x60 DIN 912	8
34	90.001.25.093	Šroub / Schraube / Screw	M16x70 DIN 912	2
35	90.001.25.108	Šroub / Schraube / Screw	M5x45 DIN 912	4
36	90.004.2D.019	Šroub / Schraube / Screw	M16x40 DIN 915	1
37	90.011.27.005	Šroub / Schraube / Screw	M6x12 DIN 7991	30
38	90.100.55.008	Matice / Mutter / Nut	M16 DIN 934	1
39	90.301.0Z.008	Válcový kolík / Zylinderstift / Cylindrical pin	8x20 DIN 7	2
40	90.302.0Z.001	Kuželový kolík + závit / Kegelbolzen + Gewinde / Taper pin + thread	6x36 DIN 7978	4
41	90.302.0Z.003	Kuželový kolík + závit / Kegelbolzen + Gewinde / Taper pin + thread	8x36 DIN 7978	4
42	91.270.006	Senzor / Sensor / Sensor	LMIX2-000-08.0-1-01	1
43	92.003.001	Natáčecí šroubení / Winkelverschraubung / Swivelling screw	RSWS 08LR	1
44	92.006.001	Propojka / Verbindungsstück / Jumper T	TS 8L	2
45	92.008.101	Průchodka přímá / Tülle / Direct grommet	P-GSV 08L	1
46	92.009.001	Průchodka úhlová / Tülle / Angle grommet	WSS 08L M.SKT.M.	6
47	92.013.001	Matice / Mutter / Nut	M 08L	18
48	92.014.001	Těsnící kroužek / Dichtungsring / Sealing ring	P-R 08L/S	18
49	95.710.002	Kuličkové pouzdro / Kugelbuchse / Ball bush	50x70	4

BOMAR, spol. s r.o.
Těžební 1236/1
62700 Brno
CZECH REPUBLIC

50	95.800.021	Pojistný kroužek / Sicherungsring / Retaining ring d62 DIN 471	1
51	96.040.004	Stírací manžeta / Manschette / Sleeve 50x62x5	4
52	96.082.002	Těsnící kroužek / Dichtungsring / Sealing ring 13/17	1
53	99.170.001	Řetěz energií / Energiekette / Hydr. pipes leading	1
54	99.201.008	Vozík / Wagen / Carriage LGW25CC-Hiwin	3

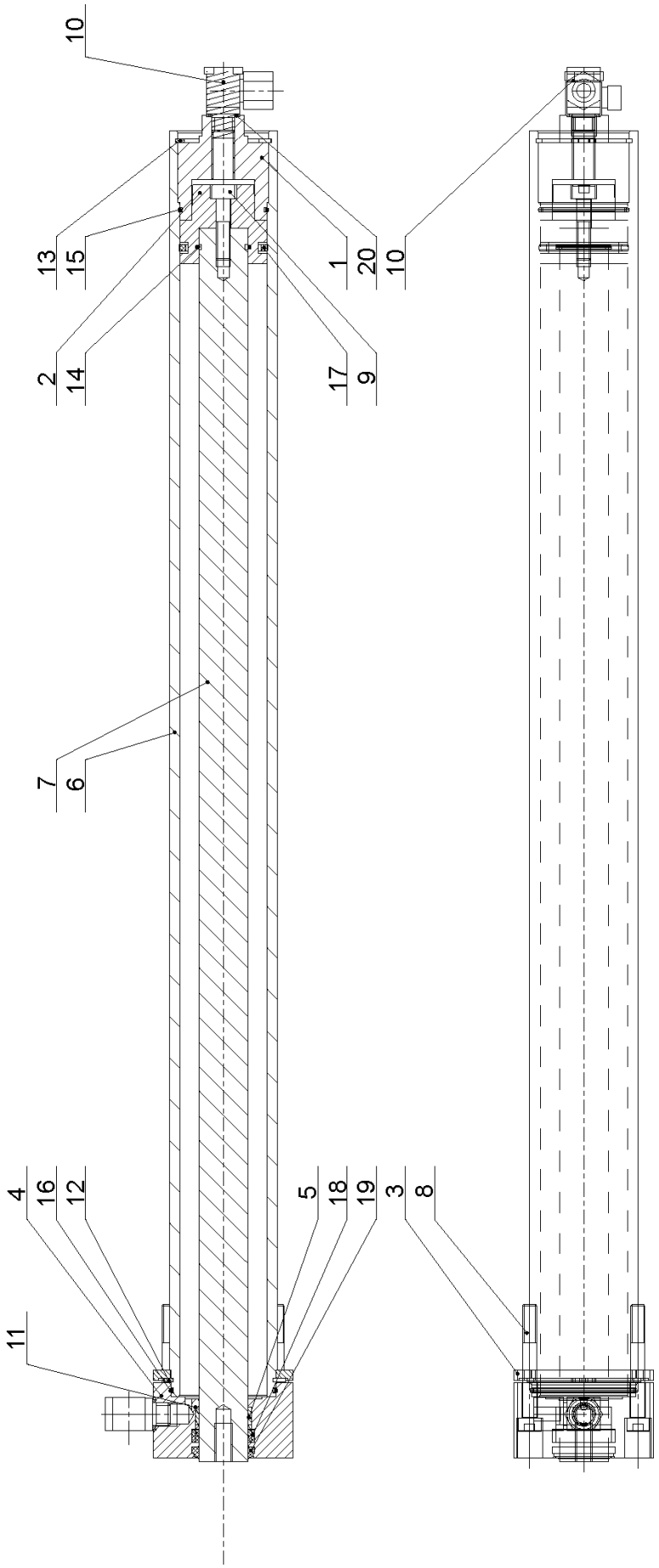

25.4. Válec podávání / Vorschubzylinder / Feeding cyliner

Poz.	Objednací číslo	Název položky		ks
Pos.	**Bestell - Nr.**	**Bezeichnung**		**Menge**
Pos.	**Reference No.**	**Item**		**Pcs.**
1	30.1807-103	Víko / Deckel / Cover		1
2	30.1807-105	Píst / Kolben / Piston		1
3	30.2007-103	Příložka / Lasche / Splice plate		1
4	30.3507-103	Víko / Deckel / Cover		1
5	30.3507-104	Vodící pásek / Führungsband / Guiding band		1
6	30.8907-201	Válec / Zylinder / Cylinder		1
7	30.8907-202	Pístnice / Kolbenstange / Piston rod		1
8	90.001.25.041	Šroub / Schraube / Screw	M8x65 DIN 912	4
9	90.001.55.084	Šroub / Schraube / Screw	M8x35 DIN 912	1
10	92.003.001	Šroubení natáčecí / Winkelverschraubung / Swivelling screw	RSWS 08LR	2
11	95.700.005	Pouzdro / Büchse / Bush KU	28x20	1
12	95.800.020	Pojistný kroužek / Sicherungsring / Retaining ring	d60 DIN 471	1
13	95.801.009	Pojistný kroužek / Sicherungsring / Retaining ring	d52 DIN 472	1
14	96.001.007	O kroužek / O Ring / O Ring	25x2	1
15	96.001.013	O kroužek / O Ring / O Ring	45x2	1
16	96.001.014	O kroužek / O Ring / O Ring	55x2	1
17	96.020.005	Q kroužek / Q Ring / Q Ring	4326A 39.2x5.33	1
18	96.041.003	Těsnící manžeta / Dichtungsmanschette / Gasket	28x36x7 UN	1
19	96.060.003	Stírací kroužek / Abstreifring / Wiping ring	28x36	1
20	96.082.002	Těsnící kroužek / Dichtungsring / Sealing ring	13/17	2

BOMAR, spol. s r.o.
Těžební 1236/1
62700 Brno
CZECH REPUBLIC

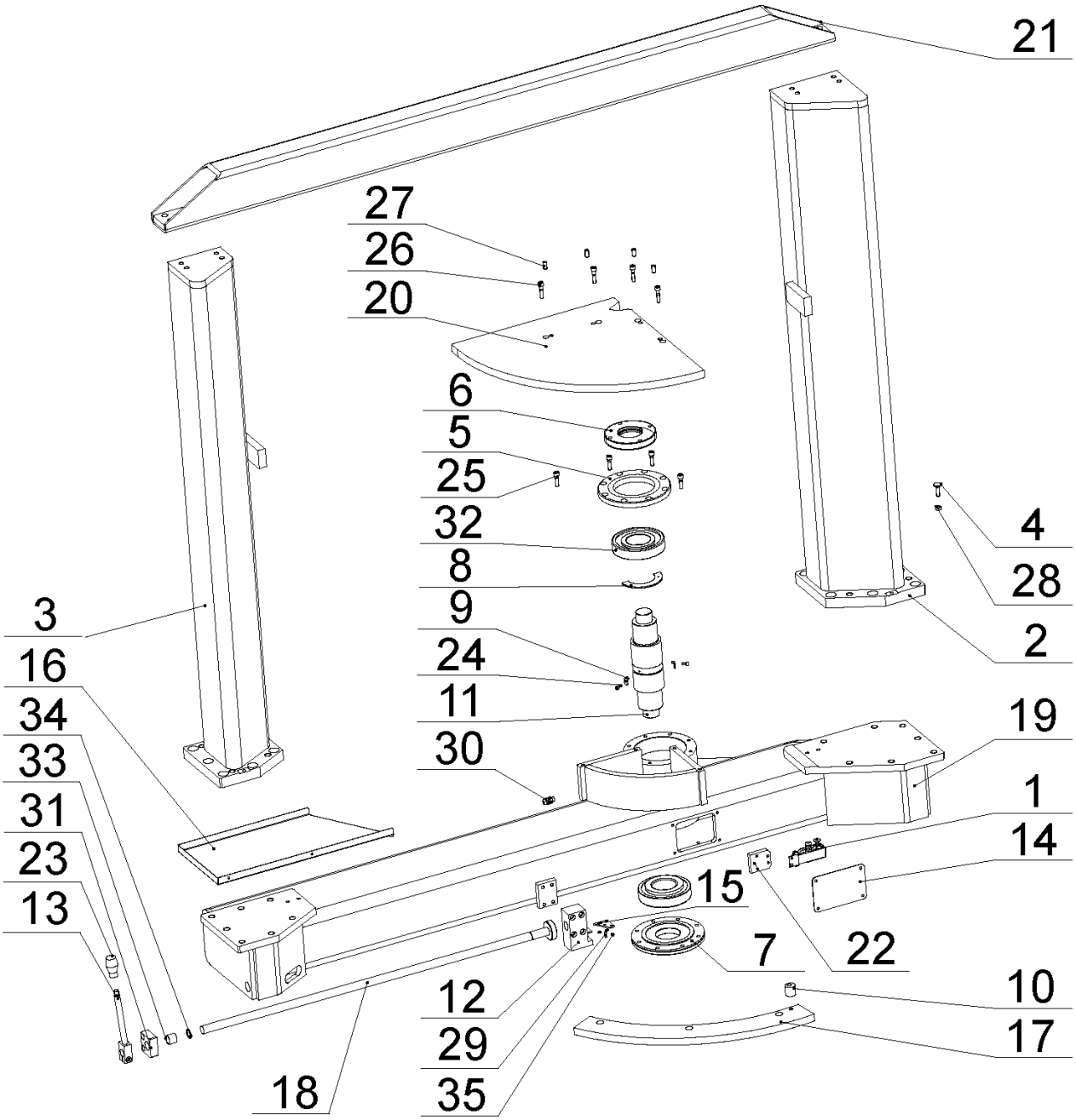

25.5. Otočná konzola / Drehkonsole / Turning console

Poz.	Objednací číslo	Název položky		ks
Pos.	**Bestell - Nr.**	**Bezeichnung**		**Menge**
Pos.	**Reference No.**	**Item**		**Pcs.**
1	201.2902-200	Snímač / Sensor / Sensor		1
2	201.8902-100	Sloup / Säule / Pillar		1
3	201.8902-400	Sloup / Säule / Pillar		1
4	30.0702-013	Šroub / Schraube / Screw		1
5	30.0802-004	Víko / Deckel / Cover		1
6	30.0802-005	Matice ložiska / Lagermutter / Bearing nut		1
7	30.0802-006	Víko / Deckel / Cover		1
8	30.2902-010	Segment / Segment / Segment		1
9	30.2902-112	Držák / Halter / Holder		2
10	30.6014-209	Excentr / Exzenter / Eccentric		1
11	30.8602-003	Čep konzoly / Bolzen / Pivot		1
12	30.8602-510	Kostka / Klotz / Cube		1
13	30.8602-514	Tyč zpevnění / Stange / Rod		1
14	30.8602-515	Kryt / Abdeckung / Cover		1
15	30.8602-521	Deska / Platte / Plate		1
16	30.8602-524	Plech / Blech / Sheet metal		1
17	30.8902-016	Segment / Segment / Segment		1
18	30.8902-018	Tyč / Stange / Rod		1
19	30.8902-501	Otočná konzola / Gehrungskonsole / Turning console		1
20	30.8902-502	Segment / Segment / Segment		1
21	30.8902-504	Výztuha / Steife / Stiffener		1
22	30.8902-525	Držák / Halter / Holder		1
23	30.8902-527	Držák / Halter / Holder		1
24	90.001.25.008	Šroub / Schraube / Screw	M5x12 DIN 912 8.8	2
25	90.001.55.083	Šroub / Schraube / Screw	M8x30 DIN 912 8.8 VZ	4
26	90.001.55.084	Šroub / Schraube / Screw	M8x35 DIN 912 8.8 VZ	4
27	90.002.2D.015	Šroub / Schraube / Screw	M10x20 DIN 913 45H	4
28	90.100.55.005	Matice / Mutter / Nut	M8 DIN 934 8.8	1
29	90.301.0Z.002	Válcový kolík / Zylinderstift / Parallel pin	5x16 DIN 7	1
30	91.070.010	Vývodka / Tülle / Bushing	M12x1.5	1
31	94.002.001	Rukojeť / Griff / Handle	M12	1
32	95.300.001	Ložisko / Lager / Bearing	30312 AX	2
33	95.700.004	Pouzdro / Buchse / Bush	KU 20x20	1
34	95.800.009	Pojistný kroužek / Sicherungsring / Retaining ring	d20 DIN 471	1
35	96.002.002	O-kroužek / O-Ring / O-ring	4x2.2	3

BOMAR, spol. s r.o.
Těžební 1236/1
62700 Brno
CZECH REPUBLIC

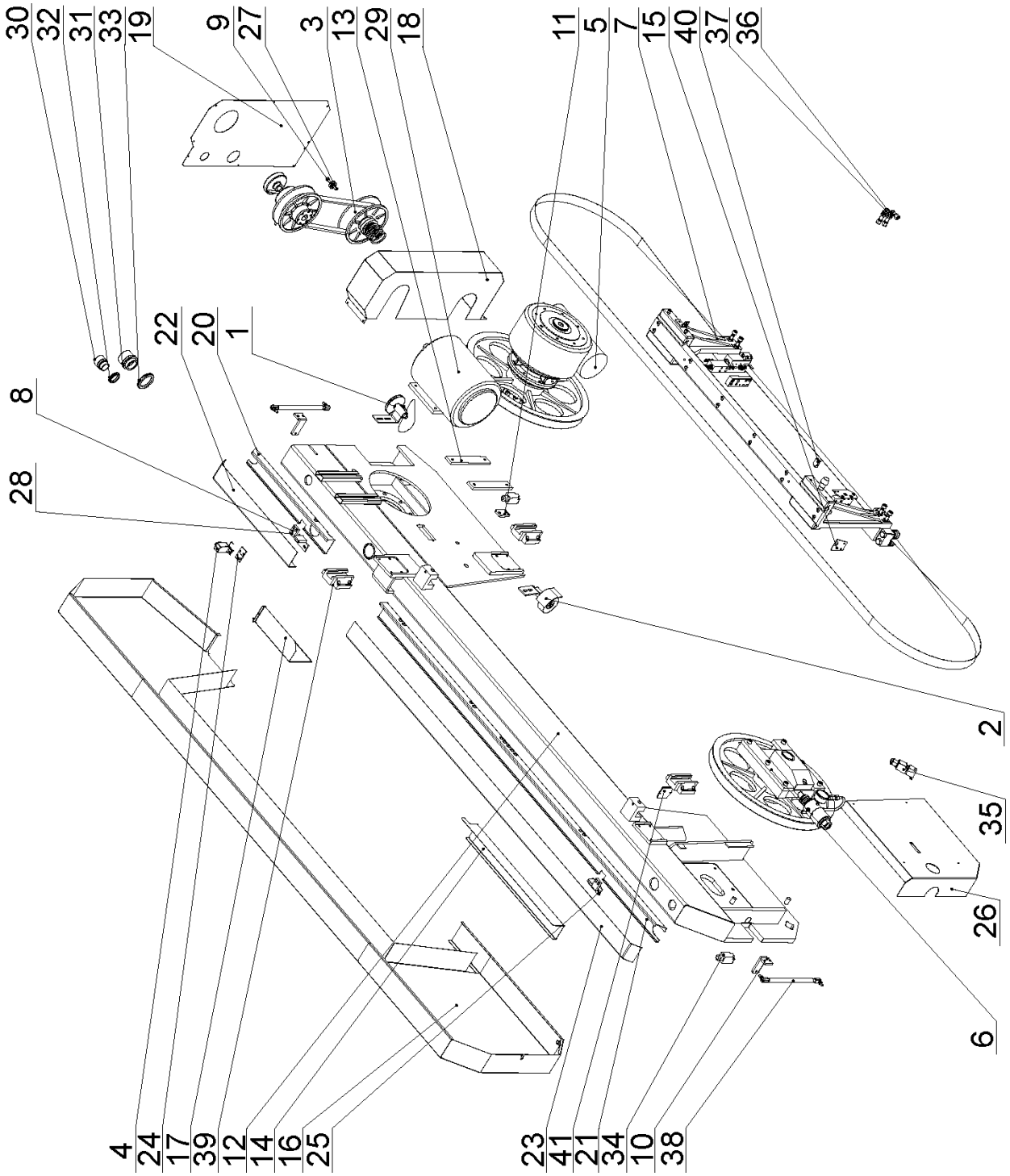

25.6. Pilové rameno / Sägerahmen / Saw arm

Poz.	Objednací číslo	Název položky	ks
Pos.	**Bestell - Nr.**	**Bezeichnung**	**Menge**
Pos.	**Reference No.**	**Item**	**Pcs.**
1	201.2914-400	Řemenice / Riemenscheibe / Sheave	1
2	201.2914-700	Kartáček / Spänbürste / Cleaning brush	1
3	201.6005-100	Variátor / Variator / Variator	1
4	201.6702-200	Snímač / Sensor / Sensor	1
5	201.8905-200	Pohon / Antrieb / Drive	1
6	201.8908-200	Napínání pásu / Sägebandantrieb / Saw band stretching	1
7	201.8910-000	Vedení pásu / Sägebandführung / Saw band guiding	1
8	30.1714-103	Kostka / Klotz / Cube	2
9	30.2914-401	Řemenice / Riemenscheibe / Sheave	1
10	30.7114-157	Kryt / Abdeckung / Cover	2
11	30.8414-005	Držák / Halter / Holder	1
12	30.8904-201	Rameno / Sägerahmen / Saw arm	1
13	30.8904-207	Lišta / Leiste / Lath	2
14	30.8914-110	Kryt / Abdeckung / Cover	1
15	30.8914-113	Clona / Schürze / Shutter	1
16	30.8914-203	Kryt / Abdeckung / Cover	1
17	30.8914-208	Kryt / Abdeckung / Cover	1
18	30.8914-209	Kryt / Abdeckung / Cover	1
19	30.8914-210	Víko / Deckel / Cover	1
20	30.8914-212	Koryto / Rinne / Feed trough	1
21	30.8914-213	Koryto / Rinne / Feed trough	1
22	30.8914-214	Kryt / Abdeckung / Cover	1
23	30.8914-215	Kryt / Abdeckung / Cover	1
24	30.8914-216	Podložka / Scheibe / Washer	1
25	30.8914-217	Konzola / Konsole / Console	2
26	30.8914-218	Kryt / Abdeckung / Cover	1
27	90.001.25.040	Šroub / Schraube / Screw M8x60 DIN 912 8.8	1
28	90.301.0Z.006	Válcový kolík / Zylinderstift / Parallel pin 6x38 DIN 7	2
29	91.001.021	Elektromotor / Elektromotor / Electromotor 4AP 112-4A 4 kW 1440	1
30	91.071.004	Vývodka / Tülle / Bushing PG29	1
31	91.071.006	Vývodka / Tülle / Bushing PG48	1
32	91.072.007	Matice / Mutter / Nut PG29	1
33	91.072.009	Matice / Mutter / Nut PG48	1
34	91.173.007	Koncový spínač / Endschalter / End switch FR 601-M2	2
35	91.173.012	Koncový spínač / Endschalter / End switch QKS8	1
36	92.009.001	Průchodka / Tülle / Bushing	2
37	92.013.001	Matice / Mutter / Nut	4
38	93.004.004	Plynová vzpěra / Gasfeder / Gas spring	2
	93.004.005	Čep / Bolzen / Pivot	4
39	99.201.002	Vozík / Wagen / Trolley LGW35-Hiwin	1
40	91.174.001	Laser	1
41	91.175.001	Zrcátko / Spiegel / Mirror	1

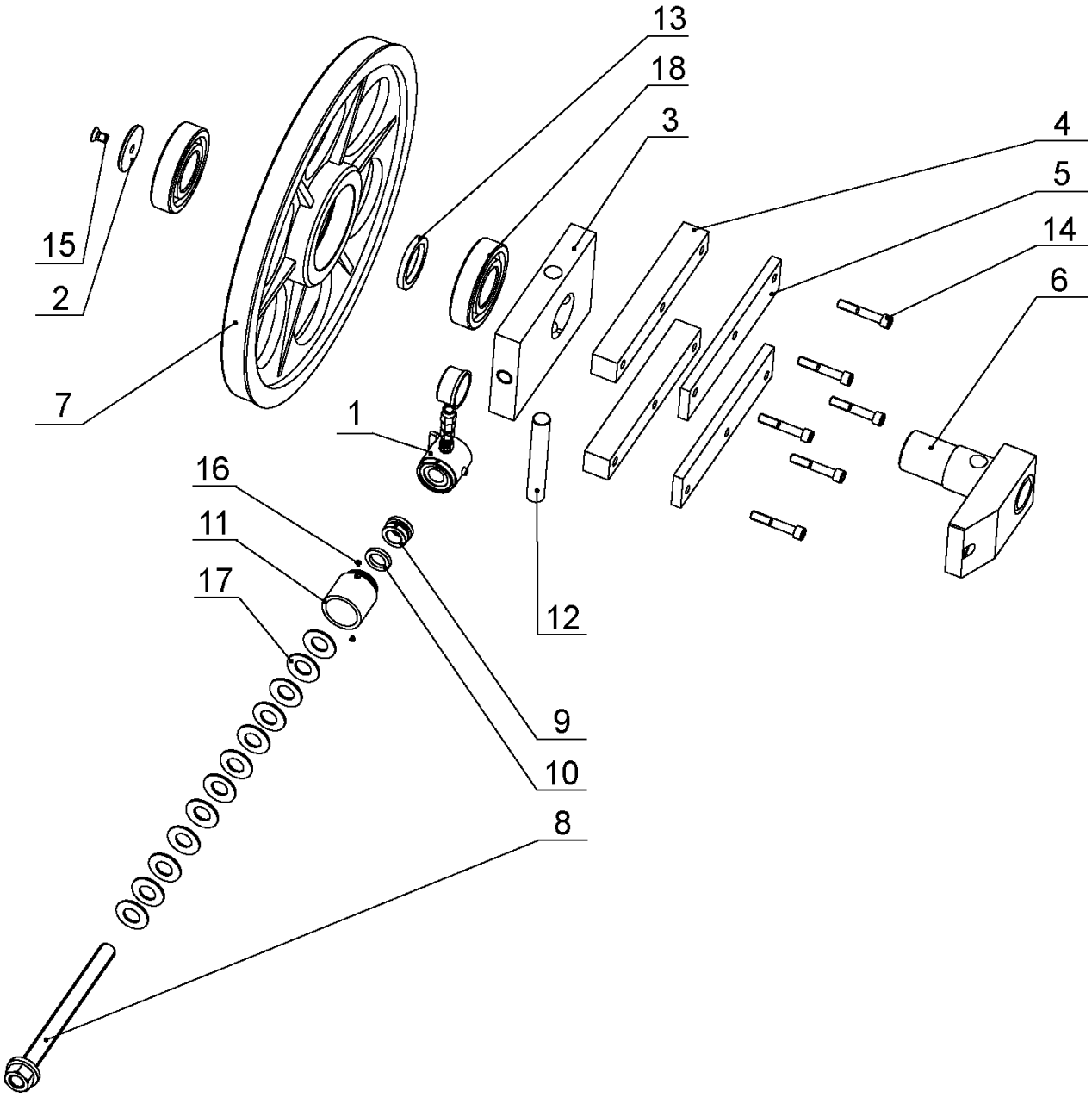

25.7. Napínání pilového pásu / Sägebandspannung / Saw band stretching

Poz.	Objednací číslo	Název položky		ks
Pos.	**Bestell - Nr.**	**Bezeichnung**		**Menge**
Pos.	**Reference No.**	**Item**		**Pcs.**
1	201.6007-200	Válec snímání napnutí / Zylinder - Bandspannungsabtasten / Cylinder - tension sensing		1
2	30.1804-010	Podložka / Scheibe / Washer		1
3	30.6008-001	Kostka napínání / Bandspannungswürfel / Stretching cube		1
4	30.6008-002	Lišta vodící / Führungsleiste / Guiding listel		2
5	30.6008-003	Lišta vodící / Führungsleiste / Guiding listel		2
6	30.6008-004	Napínání / Spannung / Stretching		1
7	30.6008-006	Kolo napínací / Umlenkrad / Stretching wheel		1
8	30.6008-008	Śroub napínání / Bandspannungsschraube / Stretching screw		1
9	30.6008-011	Kroužek / Ring / Ring		1
10	30.6008-012	Distanc / Distanz / Distance		1
11	30.6008-013	Trubka / Rohr / Tube		1
12	30.6008-014	Čep napínání / Bolzen Bandspannung / Stretching pivot		1
13	30.6708-002	Distanční trubka / Distanzrohr / Distance tube		1
14	90.001.25.064	Šroub / Schraube / Screw	M12x70 DIN 912 8.8	6
15	90.011.27.009	Šroub / Schraube / Screw	M12x20 DIN 7991 10.9	1
16	90.011.27.018	Šroub / Schraube / Screw	M4x6 DIN 7991 10.9	2
17	90.350.0Z.004	Talířová pružina / Tellerfeder / Belleville spring	50x25.4x3	12
18	95.001.031	Ložisko / Lager / Bearing	6212 2RS	2

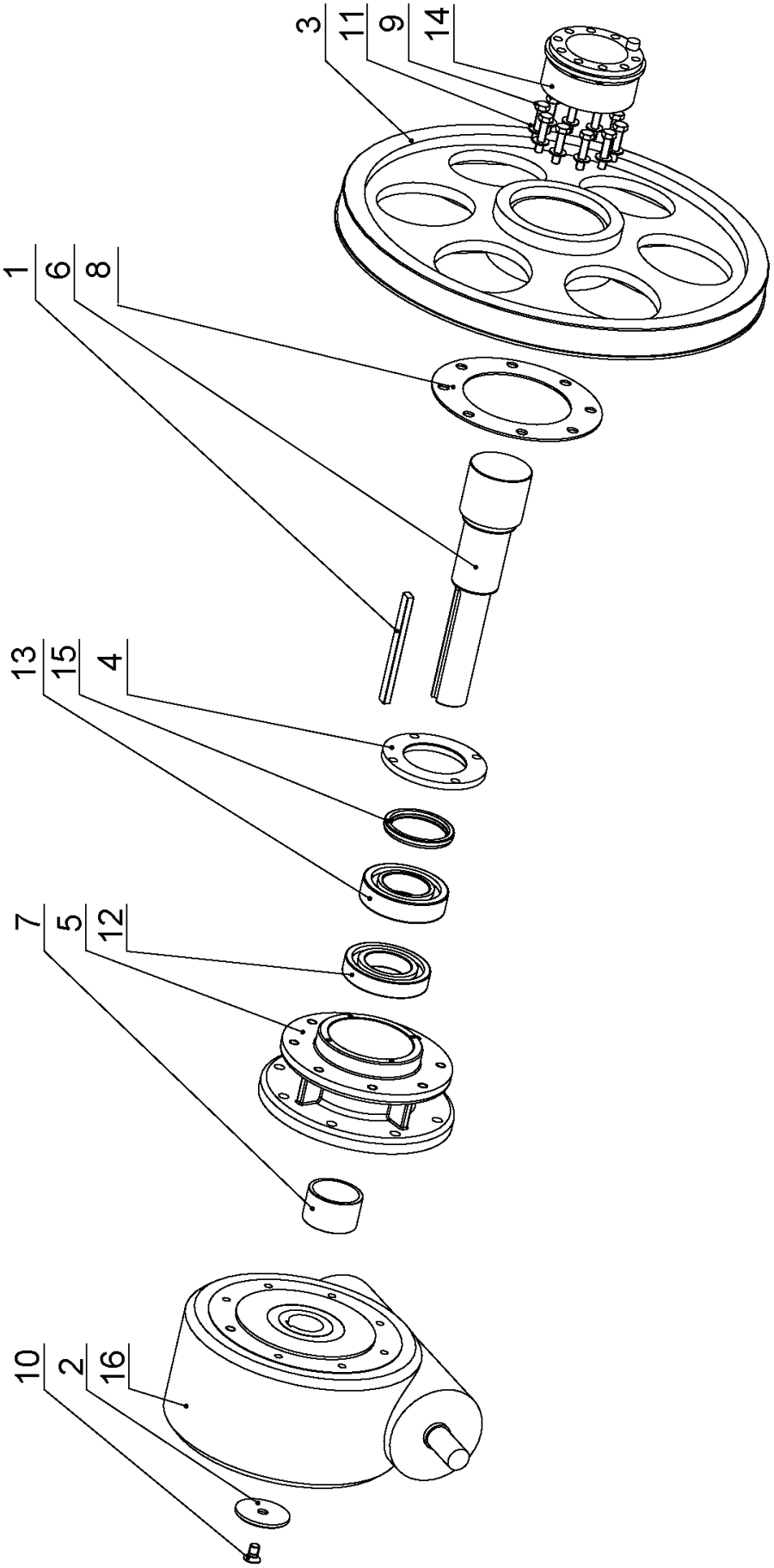

25.8. Pohon pilového pásu / Sägebandantrieb / Saw band driving

Poz.	Objednací číslo	Název položky		ks
Pos.	**Bestell - Nr.**	**Bezeichnung**		**Menge**
Pos.	**Reference No.**	**Item**		**Pcs.**
1	30.1804-008	Pero / Feder / Spring		1
2	30.1804-010	Podložka / Scheibe / Washer		1
3	30.6005-001	Hnací kolo / Antreibsrad / Driving wheel		1
4	30.6005-006	Víko / Deckel / Cover		1
5	30.8904-203	Příruba / Flansch / Flange		1
6	30.8904-204	Hřídel / Welle / Shaft		1
7	30.8904-205	Distanční trubka / Distanzrohr / Distance tube		1
8	30.8904-206	Distanční kroužek / Distanzring / Distance ring		1
9	90.005.55.027	Šroub / Schraube / Screw	M10x45 DIN 933 8.8	10
10	90.011.27.009	Šroub / Schraube / Screw	M12x20 DIN 7991 10.9	1
11	90.150.50.006	Podložka / Scheibe / Washer	d10,5 DIN 125	10
12	95.001.031	Ložisko / Lager / Bearing	6212 2RS	1
13	95.201.003	Ložisko / Lager / Bearing	2212 NU	1
14	95.825.001	Pouzdro / Buchse / Bush	80x120	1
15	95.830.006	Těsnící kroužek / Dichtungsring / Sealing ring	70x90x10	1
16	99.001.010	Šneková převodovka / Schneckengetriebe / Worm gear	VF130/P/i46	1

BOMAR, spol. s r.o.
Těžební 1236/1
62700 Brno
CZECH REPUBLIC

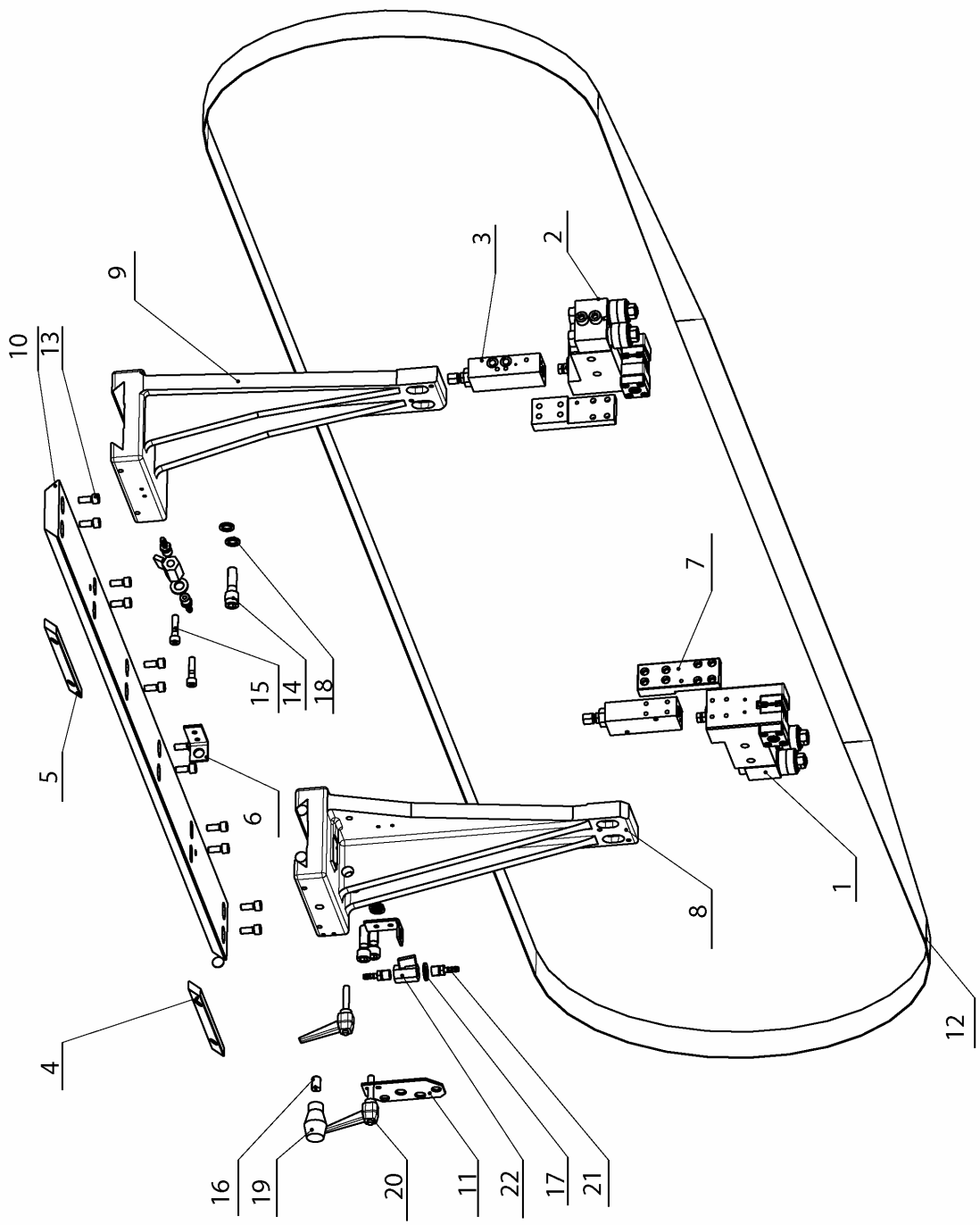

25.9. Vedení pilového pásu / Sägebandführung / Saw band guiding

Poz.	Objednací číslo	Název položky		ks
Pos.	**Bestell - Nr.**	**Bezeichnung**		**Menge**
Pos.	**Reference No.**	**Item**		**Pcs.**
1	201.6110-550	Kostka vodící L/ Führungsklotz / Guiding Cube		1
2	201.6110-610	Kostka vodící P / Führungsklotz / Guiding Cube		1
3	201.6816-100	Regulace řezu / Schnittdruckregulation / Pressure regulation		2
4	30.1810-004	Lišta držáku / Halterleiste / holder listel		1
5	30.1810-005	Lišta držáku / Halterleiste / holder listel		1
6	30.1814-011	Držák ventilu / Ventilhalter / Valve holder		2
7	30.6016-002	Deska / Platte / Plate		2
8	30.8910-001	Držák L / Linke Halter / Holder L		1
9	30.8910-002	Držák P /Rechte Halter / Holder right		1
10	30.8910-003	Lišta / Leiste / Listel		1
11	30.8910-004	Držák / Halter / Holder		1
12	30.8910-006	Pás / Band / Band		1
13	90.001.25.032	Šroub / Schraube / Screw	8x20 DIN 912 8,8	12
14	90.001.25.060	Šroub / Schraube / Screw	M12x40	4
15	90.001.55.035	Šroub / Schraube / Screw	M8x35 DIN 912 8,8	2
16	90.002.2D.018	Šroub stavěcí / Stellschraube / Setscrew	M12x20	1
17	90.150.50.007	Podložka / Scheibe / Washer	d13 DIN 125	2
18	90.163.00.003	Podložka / Scheibe / Washer	M12 D19,5	4
19	94.002.001	Hruška / Birne / Pear		1
20	94.008.003	Páka montážní / Hebel / Assembly lever	M8x40	2
21	94.202.002	Redukce / Reduktion / Reduction	G1/4-6	4
22	99.260.003	Ventil kulovy / Kugelventil / Ball valve	.1/4	2

BOMAR, spol. s r.o.
Těžební 1236/1
62700 Brno
CZECH REPUBLIC

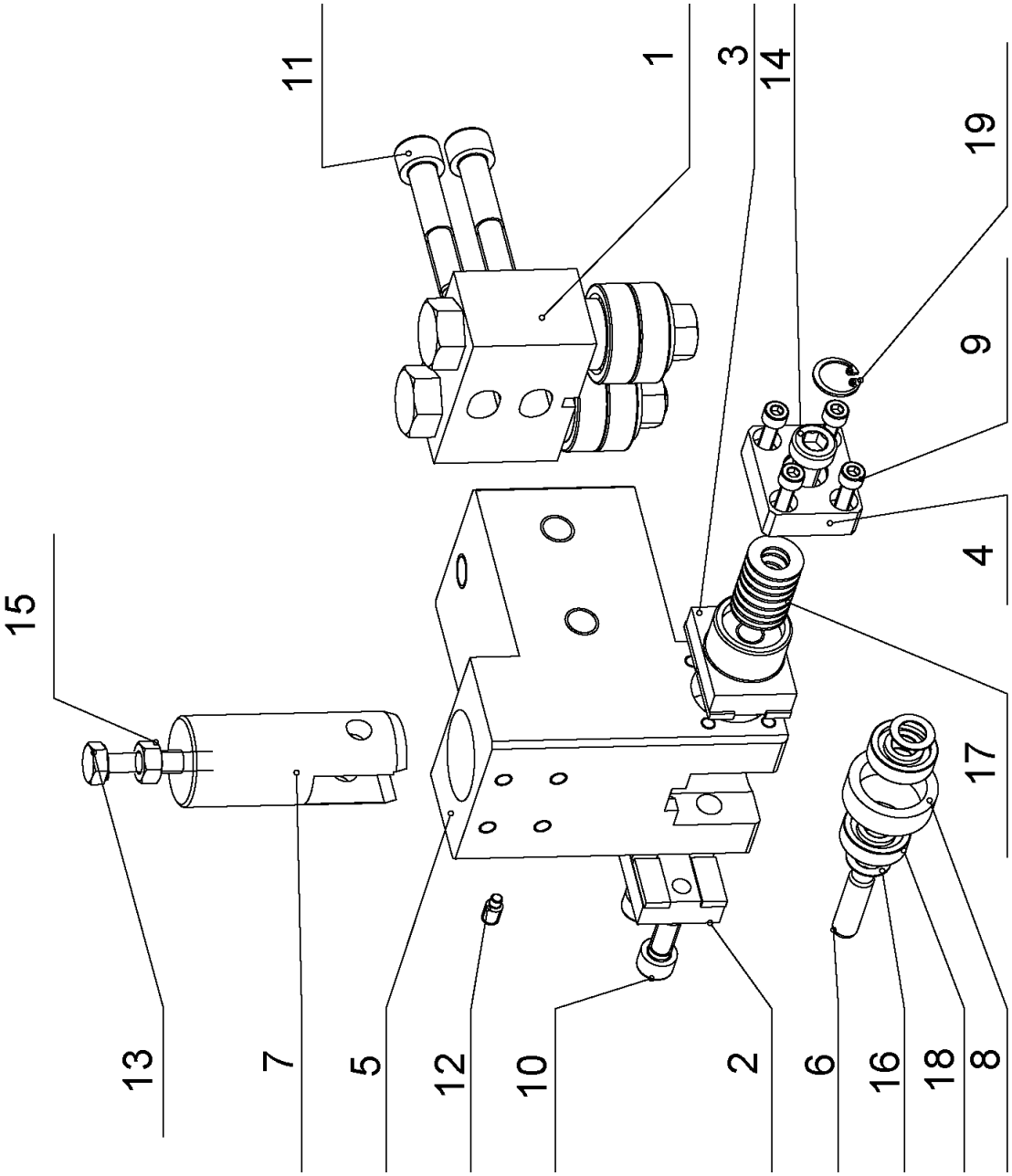

25.10. Pravá vodící kostka / Rechter Führungsklotz / Right guiding cube

Poz.	Objednací číslo	Název položky		ks
Pos.	**Bestell - Nr.**	**Bezeichnung**		**Menge**
Pos.	**Reference No.**	**Item**		**Pcs.**
1	201.6110-510	Vedení / Führung / Guide		1
2	30.6010-105	Deska vodící / Führungsplatte / Guiding plate		1
3	30.6010-214	Deska vodící / Führungsplatte / Guiding plate		1
4	30.6010-218	Příložka / Lasche / Splice plate		1
5	30.6110-501	Kostka vodící pravá / Rechte Führungsplatte / Right guiding cube		1
6	30.6710-108	Kolík / Bolzen / Pin		1
7	30.6710-109	Píst / Kolben / Piston		1
8	30.6710-110	Kroužek / Ring / Ring		1
9	90.001.25.009	Šroub / Schraube / Screw	M5x16 DIN 912 8,8	4
10	90.001.25.032	Šroub / Schraube / Screw	8x20 DIN 912 8,8	2
11	90.001.25.053	Šroub / Schraube / Screw	M10x55 DIN 912 8,8	2
12	90.004.2D.002	Šroub stavěcí / Stellschraube / Setscrew	M6x12	1
13	90.005.55.019	šroub se šestihrannou hlavou / Sechskantschraube / Hex head screw	M8x40	1
14	90.015.25.010	Šroub / Schraube / Screw	M10x25 DIN 7984	1
15	90.100.55.005	Matice / Mutter / Nut	M8 DIN934	1
16	90.154.50.003	Podložka / Scheibe / Washer		2
17	90.350.0Z.004	Pružina / Feder / Spring	20x10.2x1.1 DIN 2093	8
18	95.001.044	Kuličkové ložisko / Kugellager / Ball bearing	609 2RS	2
19	95.801.035	Pojistný kroužek / Sicherungsring / Retaining ring		1

BOMAR, spol. s r.o.
Těžební 1236/1
62700 Brno
CZECH REPUBLIC

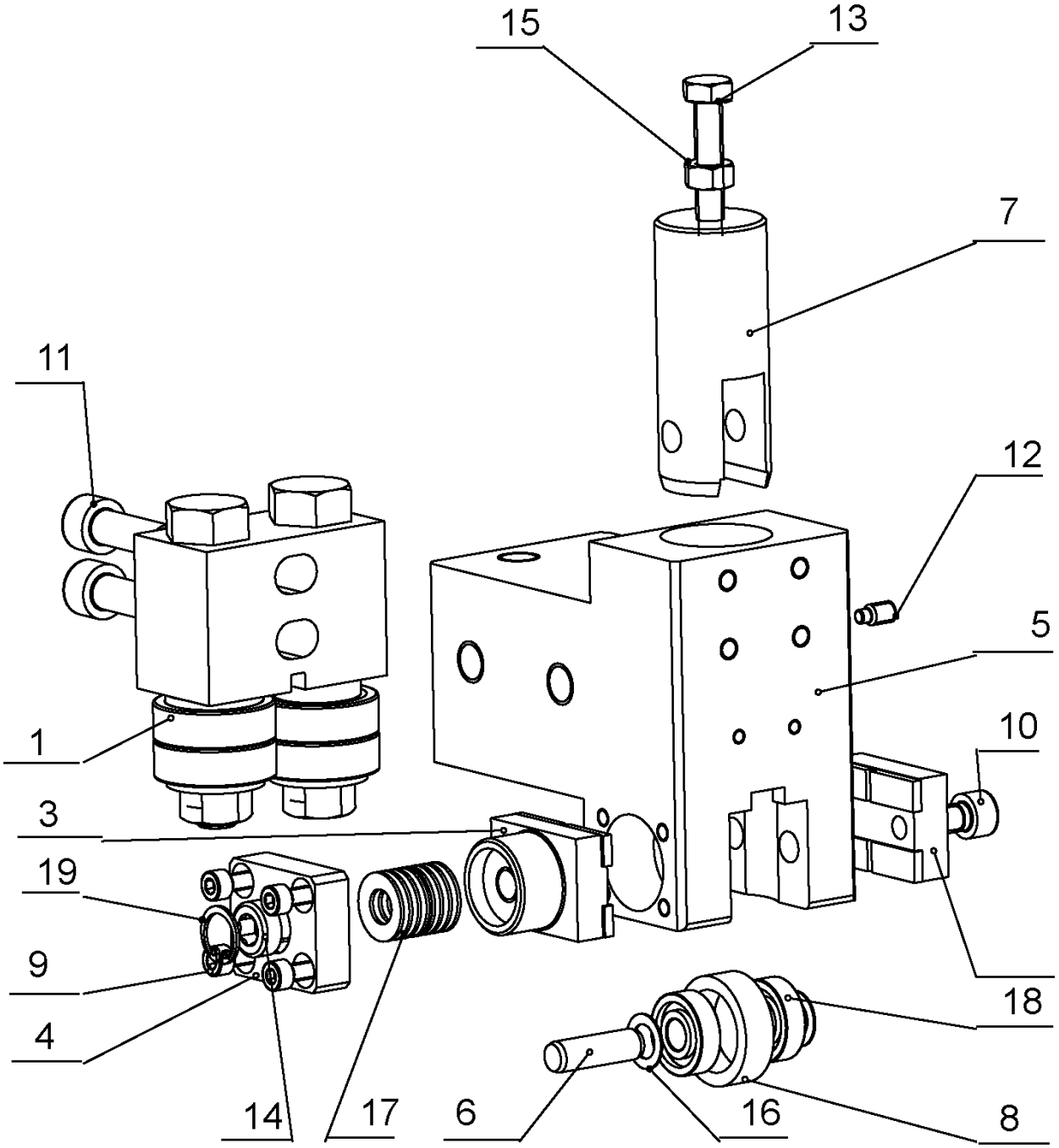

25.11. Levá vodící kostka / Linker Führungsklotz / Left guiding cube

Poz.	Objednací číslo	Název položky		ks
Pos.	**Bestell - Nr.**	**Bezeichnung**		**Menge**
Pos.	**Reference No.**	**Item**		**Pcs.**
1	201.6110-510	Vedení / Führung / Guide		1
2	30.6010-105	Deska vodící / Führungsplatte / Guiding plate		1
3	30.6010-214	Deska vodící / Führungsplatte / Guiding plate		1
4	30.6010-218	Příložka / Lasche / Splice plate		1
5	30.6110-501	Kostka vodící levá / Linke Führungsplatte / Left guiding cube		1
6	30.6710-108	Kolík / Bolzen / Pin		1
7	30.6710-109	Píst / Kolben / Piston		1
8	30.6710-110	Kroužek / Ring / Ring		1
9	90.001.25.009	Šroub / Schraube / Screw	M5x16 DIN 912 8,8	4
10	90.001.25.032	Šroub / Schraube / Screw	8x20 DIN 912 8,8	2
11	90.001.25.053	Šroub / Schraube / Screw	M10x55 DIN 912 8,8	2
12	90.004.2D.002	Šroub stavěcí / Stellschraube / Setscrew	M6x12	1
13	90.005.55.019	šroub se šestihrannou hlavou / Sechskantschraube / Hex head screw	M8x40	1
14	90.015.30.003	Šroub / Schraube / Screw	M10x25 DIN 6912	1
15	90.100.55.005	Matice / Mutter / Nut	M8 DIN934	1
16	90.154.50.003	Podložka / Scheibe / Washer	10x16x0,5 DIN 988	2
17	90.350.0Z.005	Pružina / Feder / Spring	20x10.2x1.1 DIN 2093	8
18	95.001.044	Kuličkové ložisko / Kugellager / Ball bearing	609 2RS	2
19	95.801.035	Pojistný kroužek / Sicherungsring / Retaining ring		1

BOMAR, spol. s r.o.
Těžební 1236/1
62700 Brno
CZECH REPUBLIC

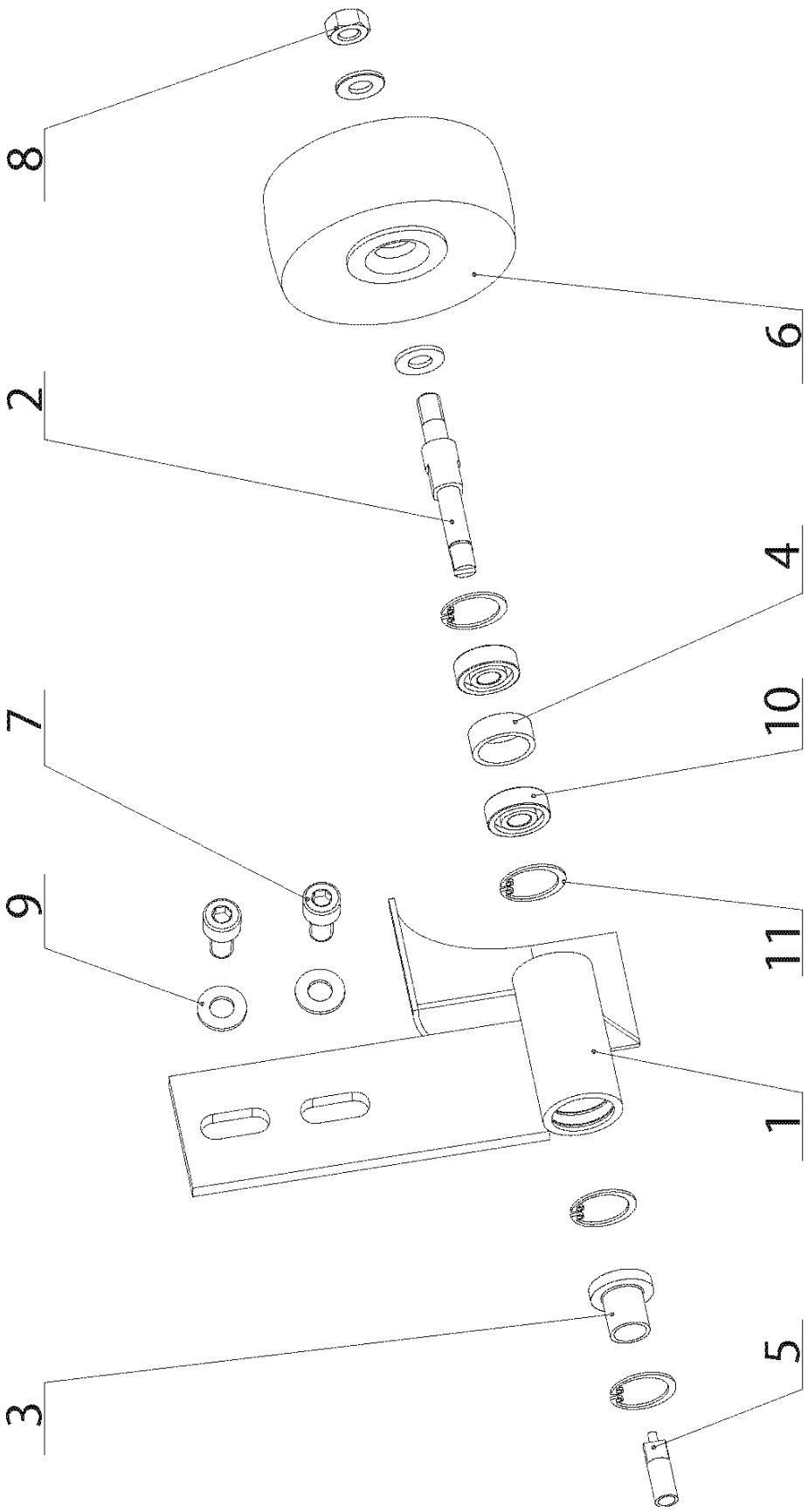

25.12. Kartáček / Spänbürste / Brush

Poz.	Objednací číslo	Název položky		ks
Pos.	**Bestell - Nr.**	**Bezeichnung**		**Menge**
Pos.	**Reference No.**	**Item**		**Pcs.**
1	30.2914-701	Držák kartáčku / Bürstenhalter / Brush holder		1
2	30.4314-002	Hřídel kartáčku / Bürstenwelle / Brush shaft		1
3	30.4314-003	Pouzdro / Buchse / Bush		1
4	30.4314-004	Distanční kroužek / Distanzring / Distance ring		1
5	30.4314-006	Koncovka / Endstück / End piece		1
6	49.250.006	Kartáček / Spänebürste / Brush		1
7	90.001.25.031	Šroub / Schraube / Screw	M8x16 DIN 912	2
8	90.100.55.005	Matice / Mutter / Nut	M8 DIN 934	1
9	90.150.50.005	Podložka / Scheibe / Washer	d8,4 DIN 125	3
10	95.001.001	Ložisko / Lager / Bearing	608 2RS	2
11	95.801.019	Pojistný kroužek / Sicherungsring / Retaining ring	d22 DIN 472	4

BOMAR, spol. s r.o.
Těžební 1236/1
62700 Brno
CZECH REPUBLIC

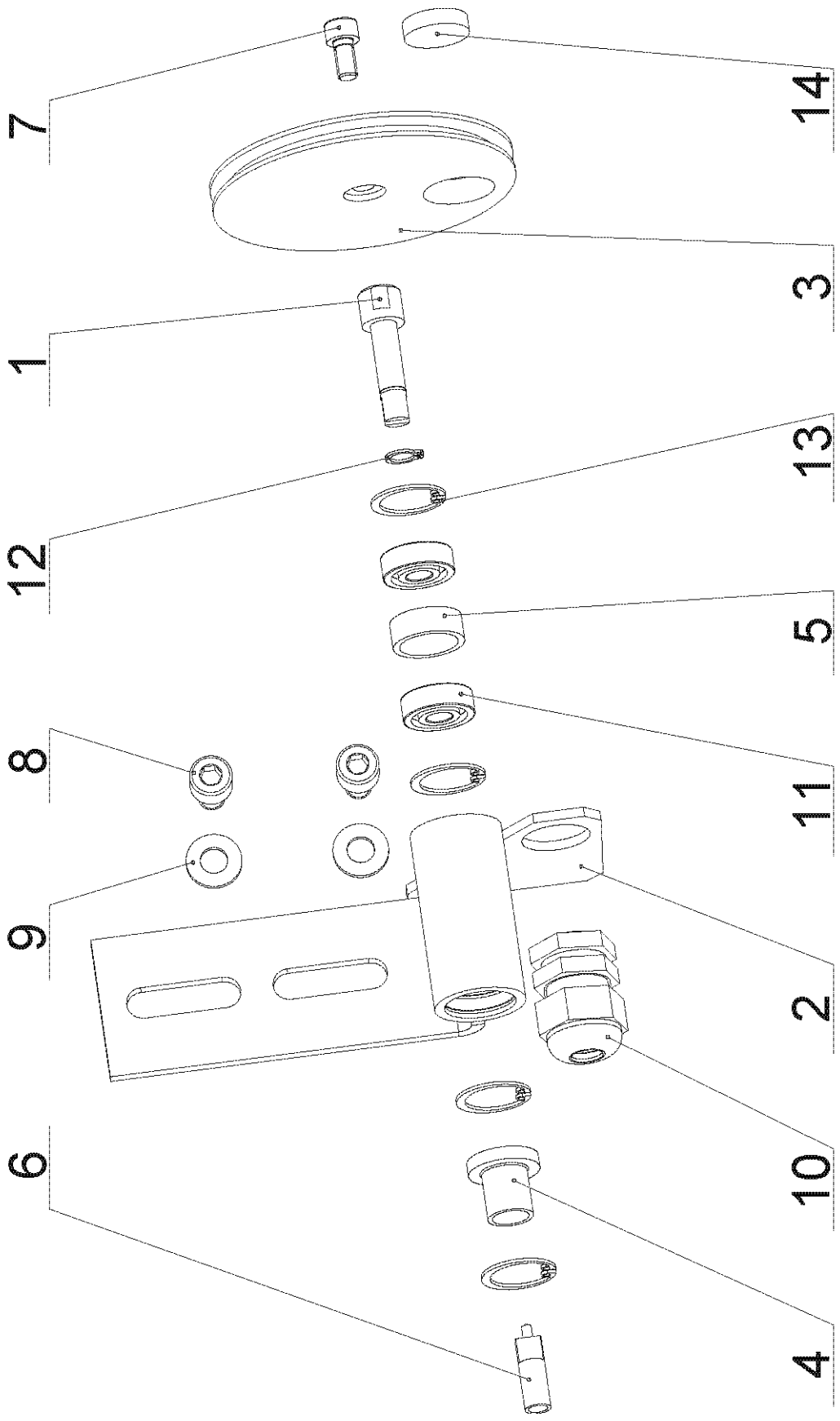

25.13. Řemenice kartáčku / Bürstenriemenscheibe / Brush pulley

Poz.	Objednací číslo	Název položky		ks
Pos.	**Bestell - Nr.**	**Bezeichnung**		**Menge**
Pos.	**Reference No.**	**Item**		**Pcs.**
1	30.2914-107	Hřídel / Welle / Shaft		1
2	30.2914-402	Držák / Halter / Holder		1
3	30.2914-404	Řemenice / Riemenscheibe / Band-wheel		1
4	30.4314-003	Pouzdro / Buchse / Bush		1
5	30.4314-004	Distanční kroužek / Distanzring / Distance ring		1
6	30.4314-006	Koncovka / Endstück / End piece		1
7	90.001.25.016	Šroub / Schraube / Screw	M6x12 DIN 912	1
8	90.001.25.029	Šroub / Schraube / Screw	M8x12 DIN 912	2
9	90.150.50.005	Podložka / Scheibe / Washer	d8,4 DIN 125	2
10	91.070.004	Vývodka / Ausführung / Bushing		1
11	95.001.001	Ložisko / Lager / Bearing	608 2RS	2
12	95.800.002	Pojistný kroužek / Sicherungsring / Retaining ring	d8 DIN 471	1
13	95.801.019	Pojistný kroužek / Sicherungsring / Retaining ring	d22 DIN 472	4
14	99.060.002	Magnet / Magnet / Magnet	22x8	1

BOMAR, spol. s r.o.
Těžební 1236/1
62700 Brno
CZECH REPUBLIC

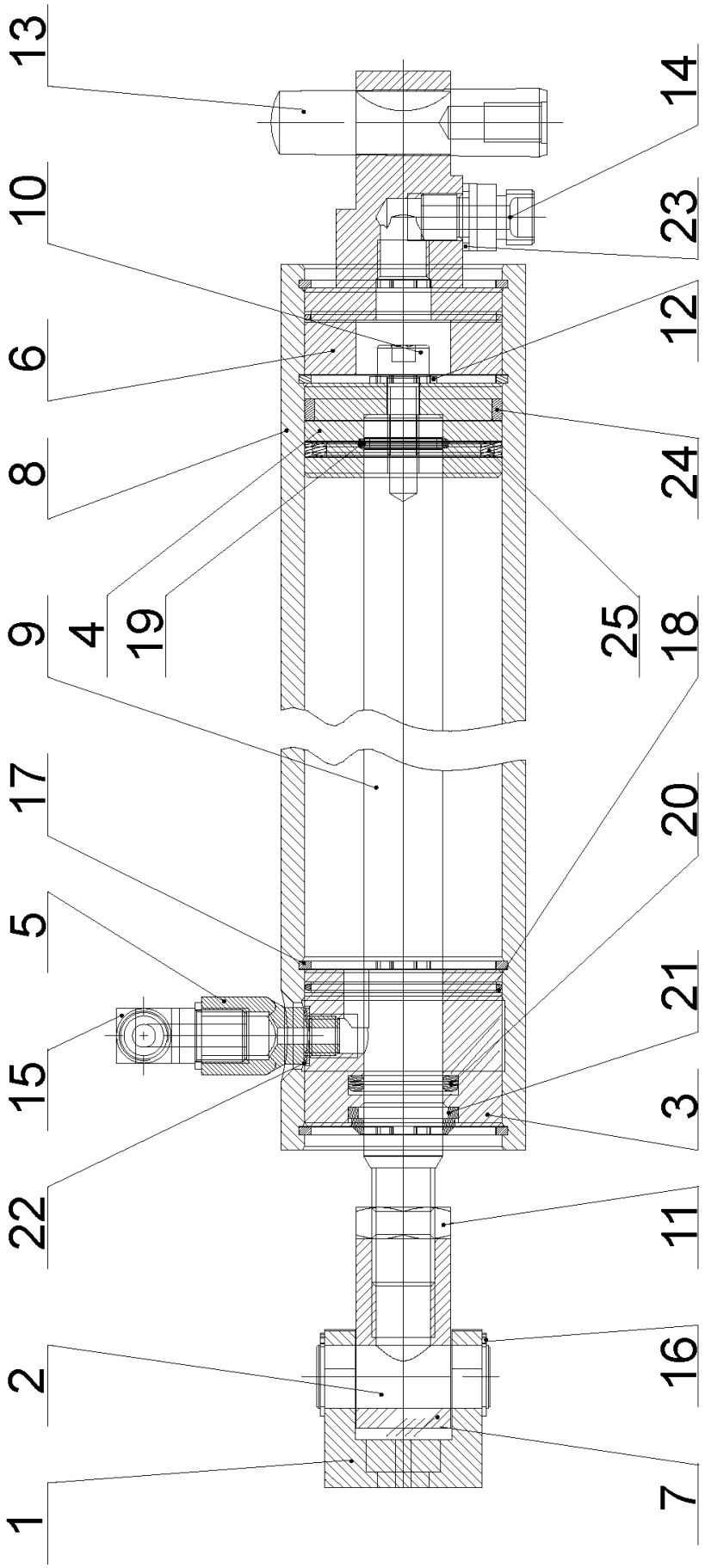

25.14. Zvedací válec / Hubzylinder / Lifting cylinder

Poz.	Objednací číslo	Název položky		ks
Pos.	**Bestell - Nr.**	**Bezeichnung**		**Menge**
Pos.	**Reference No.**	**Item**		**Pcs.**
1	30.0807-008	Držák pístnice / Kolbenstangehalter / Piston rod holder		1
2	30.0807-009	Čep / Bolzen / Pivot		1
3	30.2807-002	Horní víko / Deckel / Top cover		1
4	30.2807-004	Píst / Kolben / Piston		1
5	30.3407-103	Redukce / Reduktion / Reduction		1
6	30.4107-003	Víko / Deckel / Cover		1
7	30.8607-001	Držák pístnice / Kolbenstangehalter / Piston rod holder		1
8	30.8907-101	Válec / Zylinder / Cylinder		1
9	30.8907-103	Pístnice / Kolbenstange / Piston rod		1
10	90.001.25.032	Šroub / Schraube / Screw	M8x20 DIN 912	1
11	90.101.55.003	Matice / Mutter / Nut	M16 DIN 439	1
12	90.150.50.005	Podložka / Scheibe / Washer	d8,4 DIN 125	1
13	90.302.0Z.012	Kuželový kolík + závit / Kegelbolzen + Gewinde / Taper pin + thread	16x70 DIN 7978	1
14	92.002.001	Přímé šroubení / Gerade Verschraubung / Straight screwing	GES 08LR	1
15	92.004.001	Úhlové šroubení / Winkelverschraubung / Swivelling screw	WES 08LRK	1
16	95.800.007	Pojistný kroužek / Sicherungsring / Retaining ring	d16 DIN 471	2
17	95.801.018	Pojistný kroužek / Sicherungsring / Retaining ring	d50 DIN 472	4
18	96.001.013	O kroužek / O Ring / O Ring	45x2	2
19	96.002.007	O kroužek / O Ring / O Ring	16x2	1
20	96.041.002	Těsnící manžeta / Dichtungsmanschette / Gasket	20x28x5 UN	1
21	96.060.002	Stírací kroužek / Abstreifring / Wiping ring	20x28	1
22	96.082.001	Těsnící kroužek / Dichtungsring / Sealing ring Cu		1
23	96.082.002	Těsnící kroužek / Dichtungsring / Sealing ring	13/17	2
24	96.084.001	Vodící kroužek / Führungsring / Guiding ring	50x5.5x2.5x146.9	1
25	96.900.001	Těsnění / Dichtung / Sealing	50x39x4	1

BOMAR, spol. s r.o.
Těžební 1236/1
62700 Brno
CZECH REPUBLIC

26. Troubleshooting table

26.1. Mechanical problems

Problem	Possible causes	Repair
1.Slanting cut	- Wrongly adjusted hard metal guides.	Set according to the chapter „Servicing and adjustment“
	- Worn hard metal guides.	Replace to the chapter „Worn pieces replacement“
	- Wrongly adjusted cubes of the saw band guiding.	Set according to the chapter „Servicing and adjustment“
	- Worn bearings of the saw band guiding.	Replace according to the chapter „Worn pieces replacement“
	- Wrongly adjusted swarf brush.	Set according to the chapter „Servicing and adjustment“
	- Worn swarf brush.	Replace according to the chapter „Worn pieces replacement“
	- Insufficient saw band stretching.	Rise the saw band stretching and set the limit switch.
	- Wrongly chosen tooth system of the saw band.	Replace the saw band and keep the instructions of manufacturer on new saw band choice.
	- Worn saw band.	Replace the saw band.
	- Wrongly balanced roller conveyor.	Set the roller conveyor.
	- Dirty feeding board.	Cleanse the feeding board from debris, chip and residue material.
	- Guiding arm and guiding cube are loosened.	Clamp the guiding arm.
	- Guiding arm and cube are too far from the material.	Set the guiding cube to the material.
	- Too fast cutting rate.	Lower the material feeding speed.
	- Unexpected oscillation in material quality.	Set the cut and feeding speed to the relevant material.
2.The cut is not cut upon desired angle	- Securing lever is loosened.	Check the securing lever efficiency and carry out its adjustment according to chapter „Servicing and adjustment“.
	- Set angle does not match the cut angle.	Check the angle adjustment with a protractor and possibly set it according to chapter „Servicing and adjustment“.
	- Insufficient saw band stretching.	Stretch the saw band and set the limit switch according to chapter „Servicing and adjustment“.
	- Guiding arm and guiding cube are loosened.	Fasten the guiding arm and the cube.
	- Dirt between material and clamping jaw.	Cleanse the material and mating jaw.
3.Short lifetime of the saw band	- Insufficient saw band stretching.	Raise the tightening of the saw band set the scanner of saw band tightening according to chapter „Servicing and adjustment“.
	- Worn swarf brush.	Check the swarf brush condition and replace it in case of excessive use as described in chapter „Worn pieces replacement“

	- Wrongly adjusted swarf brush.	Check swarf brush adjustment, set it according to chapter „Servicing and adjustment“
	- Over stretched saw band	Lower stretching of the saw band and set the limit switch of the saw band stretching according to chapter „Servicing and adjustment“
	- Wrongly adjusted hard metal guides.	Check the adjustment of the hard metal guides and carry out adjustment as described in chapter „Servicing and adjustment“
	- Worn hard metal guides of the saw band.	Check the condition of the hard metal guide and if it is too worn, replace hard metal guides according to chapter „Worn pieces replacement“
	- Worn saw band guide bearings.	Check guiding bearings and if you notice some sort of excessive damage, replace them according to chapter„Worn pieces replacement“
	- Wrongly adjusted guiding cubes of the saw band.	Set guiding cube according to chapter „Servicing and adjustment“
	- Wrongly adjusted down feed and saw band speed.	Adjust the feeding and speed of a saw band according to values published by saw band manufacturer.
	- Different material quality.	Adjust feeding and speed of a saw band according to desired material (try cut-test).
	- Low-class saw band	Replace the saw band (contact your local accessory supplier for more information)
	- Wrongly chosen saw band tooth system.	Replace the saw band and keep instructions of the manufacturer on the choice.
	- Wrongly adjusted tracking.	Check the space between top of a saw band and driving wheel. Perhaps adjust the tracking as described in chapter „Servicing and adjustment“
4.Insufficient cut output.	- Worn saw band.	Replace the saw band and keep instructions of the manufacturer on the choice.
	- Wrong saw band tooth system.	Replace the saw band and keep instructions of the manufacturer on the choice.
	- Wrongly set down feed and speed of a saw band.	Set feed and speed of a saw band according to values published by saw band manufacturer.
5.The cut is not finished.	- Wrongly adjusted lower stop point of the saw frame.	Check lower limit switch and screw.
	- Stop point surface is messed-up.	Cleanse stop point surface of the limit switch from debris and residue material.
6.By choke is not possible turn	- Metal clamps between valve and panel.	Clamps must be removed and put on the shaft O-Ring about 10x2 mm.
	- Metal clams are in body of valve.	Valve must be cleared or changed.

7.Saw band drive cannot be started.	- Pressure switch is adjusted wrong.	Set the pressure switch according to chapter „Servicing and adjustment“
	- Pressure switch is defective.	Replace defective parts of the pressure switch.
8.The saw bands are cracked.	- In stretching wheel is wrong adjusting geometry.	Adjust distance band from recess wheel c.2 mm according to operating instructions.
	- Hard metal plates of circuit saw band are not adjusting.	Hard metal plates of circuit saw band must be adjusting according to operating instructions.
	- Guiding cubes are not adjusting (bearings + hard metal circuit)	Guiding cubes must be adjusting (bearings + hard metal circuit) according to operating instructions.
	- Bearings of guiding cubes are used (rolling elements are damaged or outside ring of bearing has conical form).	Bearings of guiding cubes must be replaced. Bearings must be adjusting according to operating instructions.
9.Damage tooth system of the saw band	- In gripping the lifting cylinder is backlash.	
	- Squeezed pin upper or downer holder of the lifting cylinder.	Exchange complete upper or downer holder of lifting cylinder.
10.The saw is cut downing.	- Geometry of hardmetal guiding cubes is wrong adjusted.	Hardmetal guiding cubes must be adjusted.
	- Bearings of guiding cubes are used.	Bearings of guiding cubes must be replaced.
11.Cleansing of the saw band is not functional.	- Elastic wheel of the brush drive is worn-down.	Elastic wheel of the brush must be changed.
	- Knurling of the driving wheel is worn-down.	Driving wheel must be changed.
	- The shaft of the brush drive is rusted.	The shaft of the brush must be cleaned and oiled.
	- The brush position and the brush cover is adjusted wrong – with the brush cannot be turned.	The brush cover must be posed, in order to the brush can be turned.
12.The saw arm periodically rise and fall during the cut; this cause short lifetime of the saw band.	- Backslash in driving wheel lodgement on the shaft.	Change the driving shaft for a long one, new bearings, distance ring, new driving wheel, spring, two covers on the forehead of the shaft + screws.
	- Worn channel for spring.	

26.2. Electric and hydraulic problems

Problem	Possible causes	Repair
1.Machine is not possible start.	- In socket is not voltage	Line voltage must be checked.
	- Transfer relay is closed (thermal protector)	Each FA relay must be checked.

	- Limit switch of saw band stretching, cover of frame or cover of saw band is not started.	Check of saw band stretching and covers closing.
2.When cut is finished, the frame is not raising.	- Bottom limit switch is adjusted wrong.	Bottom limit switch must be adjusted according to chapter ADJUSTING.
	- In hydraulic (pneumatic) ring is error. HYTOS (BOSCH) is not acting to frame uplift.	Function of magnetic valve must be checked, valve must be closed, voltage of clamps and inductor must be checked.
3.Electric motor and pump are without voltage. Between contactor and thermal protector is not voltage.	- Wrong contactor.	Replace contactor of engine.
4.The indicator of speed saw band is not functional.	- Sensor of speed is not adjusted.	Sensor of speed must be adjusted.
	- Defective display	The display must be changed.
	- Wrong sensor – diode of indicator speed is not light.	Sensor must be changed and adjusted.
5.Protector is switched off from engine hydraulic aggregate MA3 sometimes.	- Into hydraulic system is high working pressure.	Service engineer must reduce the pressure in hydraulic system.
6.The hydraulic aggregate cannot be started	Auxiliary contact on thermo-relay FA1 is defective.	Replace the defective contact on motor starter FA1.
7.Hydraulic aggregate is switched on but the saw arm or the main vice is not functional	- Wrong connection of electrical supply. The electrical phases are connected conversely.	The phases must be switched. Only service engineer can do this.
8.Cooling is not active	Lack of cooling agent.	Fill the tank with cooling agent.
	- Thermal relay is defective	Change the thermal relay
	- Input hosepipe is broken or obstructed.	Check the cooling circuit and perhaps cleanse cooling system.
	- Cooling pump protection is defective	Check the protection of cooling pump if need change it.
	- Cooling pump is defective.	Replace the cooling pump.

27. Roller conveyors and accessories

The rollers conveyors and accessories in this appendage are not standard accessories of the band saw and it is necessary to order them separately.

27.1. Roller conveyors

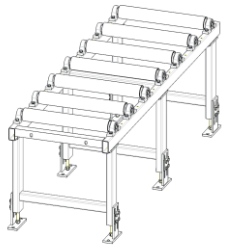

H 650 – 2
Conveyor with steel rolls
max. Load 1200 kg/m
7 Rolls Ø 80x650mm
Dimension 740x2000mm
Without legs

H 650 – 3W
Conveyor with steel rolls
max. Load 1200 kg/m
7 Rolls Ø 80x650mm
Dimension 740x3000mm
Without legs

H 650 – 3K
Conveyor with steel rolls
max. Load 1200 kg/m
10 Rolls Ø 80x650mm
Dimension 740x3000mm
Without legs

27.2. Roller conveyors prepared for powering

HP 650 – 2
Conveyor prepared for powering with chains and chain wheels
max. load 1200 kg/m
7 Rolls Ø 80x650mm
Dimension 740x2000mm
Without legs

HP 650 – 3W
Conveyor prepared for powering with chains and chain wheels
max. load 1200 kg/m
7 Rolls Ø 80x650mm
Dimension 740x3000mm
Without legs

HP 650 – 3K
Conveyor prepared for powering with chains and chain wheels
max. load 1200 kg/m
10 Rolls Ø 80x650mm
Dimension 740x3000mm
Without legs

27.3. Power and control units for powered conveyors

ARH – M
Power unit for powered conveyors of series HP, including motor, worm gear and manual clutch
Max. load 2500 kg / 1 drive

ARH – P
Power unit for powered conveyors of series HP, including motor, worm gear and pneumatic clutch
Max. load 2500 kg / 1 drive

RSP 1/1
Control unit for powered conveyors of series HP with one – phase frequency converter for one unit ARH

RSP 1/3
Control unit for powered conveyors of series HP with three – phase frequency converter for one unit ARH

RSP 2/1
Control unit for powered conveyors of series HP with one – phase frequency converter for two unit ARH

RSP 2/3
Control unit for powered conveyors of series HP with three – phase frequency converter for one unit ARH

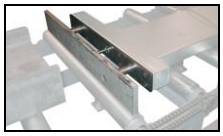

EBS
End-stop unit for combination with powered conveyors of series HP and length stops HDA and HNCA

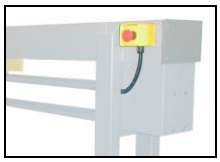

EMG-STOP
Additional emergency-stop unit for powered conveyors of series HP

27.4. Length stops

HA – 2
Manual length stop of series H for 2m

HA – 3
Manual length stop of series H for 3m

For special lengthens of the length stop HA the price can be set together from the following components:
Trolley HA
Trolley with length stop
Guide way HA
Guide way with connection material for 1m

HDA – 3
Digital Length stop with hand wheel suitable for all conveyors of series H and HP
(Attention! Only mounted on the conveyor and with protective guide ASL-H)

HDA – 6
Digital Length stop with hand wheel suitable for all conveyors of series H and HP
(Attention! Only mounted on the conveyor and with protective guide ASL-H)

Lengthens HDA
For special lengthens of the length stop HDA, use the price of 3m or 6m as basic number and add the costs for 1m

HNCA – 3
NC-controlled length stop suitable for all conveyors of series H and HP
(Attention! Only mounted on the conveyor and with protective guide ASL-H)

HNCA – 6
NC-controlled length stop suitable for all conveyors of series H and HP
(Attention! Only mounted on the conveyor and with protective guide ASL-H)

Lengthens HNCA
For special lengthens of the length stop HNCA, use the price of 3m or 6m as basic number and add the costs for 1m

H – VL
NC-controlled Incremental infeed machine

Lengthens Arm
Special order for double side band saws (DG, DGH)

27.5. Connection parts

ATH – R
Right connection part for conveyor H650.

27.6. Connection sets

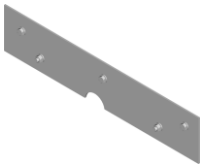

VBS L
Connection set, left side.

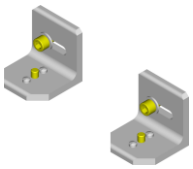

VBS R
Connection set, right side.

27.7. Accessories of roller conveyors

VR – H650
Vertical roller suitable for all conveyors of series H and HP.

BVR – H
Movable vertical, suitable for conveyors H650 and HP650.

VBF – H
Preparative leg suitable for all conveyors of series H and HP.
(Attention! At least two pieces have to be used)

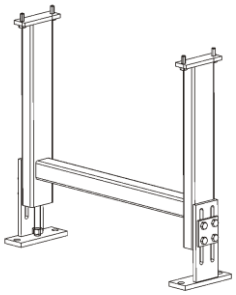

ZA-H650
Additional leg suitable for conveyors H650 and HP650,
adjusted height 700-800 mm.

27.8. Covers

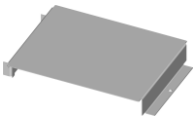

ADB – H650 – 2
Set cover plates between rolls suitable for H650–2 and HP650–2. (Attention, only suitable for named conveyor)

ADB – H650 – 3W
Set cover plates between rolls suitable for H650–3W and HP650–3W. (Attention, only suitable for named conveyor)

ADB – H650 – 3K
Set cover plates between rolls suitable for H650–3K and HP650–3K. (Attention, only suitable for named conveyor)

ASL-H – 2
Cover for rollers placing from left and right side, it is suitable for conveyors H650–2.

ASL-H – 3W
Cover for rollers placing from left and right side, it is suitable for conveyors H650-3W.

ASL-H – 3K
Cover for rollers placing from left and right side, it is suitable for conveyors H650–3K.

ASL-HP – 2
Cover for rollers placing from left and right side, it is suitable for conveyors HP650–2.

ASL-HP – 3W
Cover for rollers placing from left and right side, it is suitable for conveyors HP650-3W.

ASL-HP – 3K
Cover for rollers placing from left and right side, it is suitable for conveyors HP650–3K.

27.9. Connection schema of the roller conveyors to the band saw

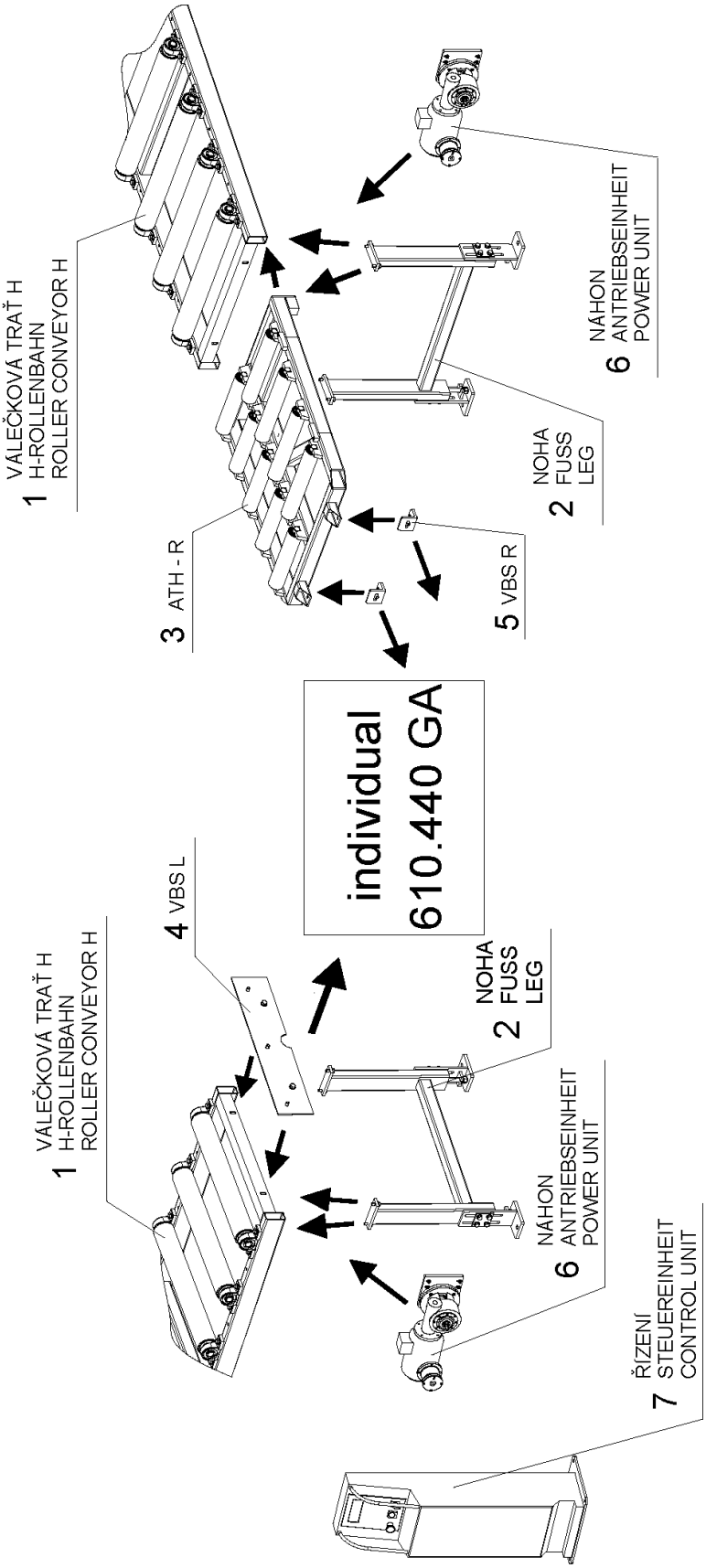

Roller conveyor H 650

Pos.	Number	Sign.	Name	
1	253.003 253.032 253.004	H 650 - 2 H 650 - 3W H 650 - 3K	Roller conveyor H Roller conveyor H Roller conveyor H	width 650mm, length 2m width 650mm, length 3m width 650mm, length 3m
2	253.036	ZA - H 650	Additional leg	width 650mm
3	255.525	ATH - R	Right connection part	width 650mm
4	255.018	VBS L	Left connection set	
5	255.260	VBS R	Right connection set	

Powered roller conveyor HP 650

Pos.	Number	Sign.	Name	
1	253.008 253.033 253.009	HP 650 - 2 HP 650 - 3W HP 650 - 3K	Roller conveyor H Roller conveyor H Roller conveyor H	width 650mm, length 2m width 650mm, length 3m width 650mm, length 3m
2	253.036	ZA - H 650	Additional leg	width 650mm
3	255.525	ATH - R	Right connection part	width 650mm
4	255.018	VBS L	Left connection set	
5	255.260	VBS R	Right connection set	
6		ARH - M ARH - P	Power unit with manual clutch Power unit with pneumatic clutch	
7		RSP	Control unit with frequency converter	

For **individual 610.440 GANC** band saw we advise, height presented groups. The roller conveyors are solved like modules, from which is possible to set together roller conveyor from desired length. In case of your questions, please contact your dealer.

Declaration of Conformity

according to the Directive of the European Parliament and the Council 98/37EC modified by the Directive of the European Parliament and the Council 98/79/EC (statutory order num. 24/2003 Dig.), according to the Directive of the Council 73/23/EEC modified by the Directive of the Council 93/68/EEC (statutory order num. 17/2003 Dig.) and according to the Directive of the Council 89/336/EEC modified by the Directive 93/68/EEC (statutory order num. 18/2003 Dig.)

Manufacturer:

BOMAR, spol. s r.o.
Těžební 1236/1
627 00 Brno
Czech Republic

we hereby **declare** that the **machinery**

Economic	**410.260G, 410.260GH, 410.260GA, 410.260GHK, 410.260GHV, 410.260DG, 410.260DGH, 410.260DGHK, 410.260DGHV, 510.320GA, 510.320G, 510.320GH, 510.320GHK, 510.320GHV, 510.320DG, 510.320DGH, 510.320DGHK, 510.320DGHV**
Transverse	**410.260DGH, 410.260GANC, 510.330DGH, 510.330GANC, 610.440DGH, 610.440GANC**
Individual	**410.260GANC, 410.260GH, 510.330GH, 510.330 GANC, 610.440GANC 610.440GH, 640.520GH, 640.520GANC**

satisfy all the **requirements** stated in the above Directives and that the **machinery is safe** for defined usage. Measures, which ensure conformity with all machinery on the market, were adopted and practiced.

To ensure the conformity, the following directives were applied:

- the Directive of the European Parliament and the Council 98/37/EC modified by the Directive of the European Parliament and the Council 98/79/EC
- the Directive of the Council 73/23/EEC modified by the Directive of the Council 93/68/EEC
- the Directive of the Council 89/336/EEC modified by the Directive of the Council 93/68/EEC

Cross-reference for the harmonized technical standards:

- ČSN EN ISO 12100-1:2004
- ČSN EN ISO 12100-2:2004
- ČSN EN 13898:2004
- ČSN EN 614-1:1997
- ČSN EN 953:1998
- ČSN EN 982:1997
- ČSN ISO 3746:1996
- ČSN EN 60204-1:2000
- ČSN EN 61000-6-4:2002 EMC
- ČSN EN 61000-6-2:2002 EMC

Year of the CE put on the product: 06

Place and date of issue: Brno, 26th May 2006

BOMAR, spol. s r.o.
Těžební 1236/1, 627 00 Brno
Czech Republic
IČO: 48908827
DIČ: CZ48908827

Company seal

Alfred Pichlmann,
Managing Director

.....
name, office, signature